USER'S GUIDE

MFC-9840CDW

Version B

UK/IRE/SAF

If you need to call Customer Service

Please complete the following information for future reference:

Model Number: MFC-9840CDW

Serial Number: [1] _____

Date of Purchase: _____

Place of Purchase: _____

[1] The serial number is on the back of the unit. Retain this User's Guide with your sales receipt as a permanent record of your purchase, in the event of theft, fire or warranty service.

Register your product on-line at

http://www.brother.com/registration

By registering your product with Brother, you will be recorded as the original owner of the product. Your registration with Brother:

- may serve as confirmation of the purchase date of your product should you lose your receipt; and
- may support an insurance claim by you in the event of product loss covered by insurance

© 2007 Brother Industries, Ltd.

Approval Information and Compilation and Publication Notice

APPROVAL INFORMATION

Brother advises that this product may not function correctly in a country other than where it was originally purchased, and does not offer any warranty in the event that this product is used on public telecommunication lines in other countries.

Compilation and Publication Notice

Under the supervision of Brother Industries, Ltd., this manual has been compiled and published, covering the latest product descriptions and specifications.

The contents of this manual and the specifications of this product are subject to change without notice.

Brother reserves the right to make changes without notice in the specifications and materials contained herein and shall not be responsible for any damages (including consequential) caused by reliance on the materials presented, including but not limited to typographical and other errors relating to the publication.

EC Declaration of Conformity under the R & TTE Directive

EC Declaration of Conformity

Manufacturer
Brother Industries Ltd.,
15-1, Naeshiro-cho, Mizuho-ku, Nagoya 467-8561, Japan

Plant
Brother Technology (Shenzhen) Ltd.,
NO6 Gold Garden Ind. Nanling Buji, Longgang, Shenzhen, China

Herewith declare that:

Products description	**: Facsimile Machine**
Type	**: Group3**
Model Number	**: MFC-9840CDW**

is in conformity with provisions of the R & TTE Directive (1999/5/EC) and we declare compliance with the following standards :

Harmonized standards applied :

Safety	EN60950-1+A11:2004
EMC	EN55022: 1998 +A1: 2000 +A2: 2003 Class B EN55024: 1998 +A1: 2001 +A2: 2003 EN61000-3-2: 2000 EN61000-3-3: 1995 +A1: 2001
Radio	EN301 489-1 V1.6.1 EN301 489-17 V1.2.1 EN300 328 V1.6.1

Year in which CE marking was first affixed : 2006

Issued by	: Brother Industries, Ltd.
Date	: 15th December, 2006
Place	: Nagoya, Japan
Signature	:

Junji Shiota
General Manager
Quality Management Dept.
Printing & Solutions Company

Table of Contents

Section I General

1 General information 2

Using the documentation 2
Symbols and conventions used in the documentation 2
Accessing the User's Guides 3
Viewing documentation 3
Control panel overview 6
Status LED indications 9

2 Loading paper and documents 11

Acceptable paper and other media 11
Recommended paper 11
Type and size of paper 11
Handling and using special paper 13
Unprintable area 16
Unprintable area for copies 16
Unprintable area when printing from a computer 17
Loading paper and envelopes 17
Loading documents 20
Using the ADF (automatic document feeder) 20
Using the scanner glass 21

3 General setup 22

Mode timer 22
Paper settings 22
Paper type 22
Paper size 23
Tray use in copy mode 23
Tray use in fax mode 24
Tray use in print mode 24
Volume settings 25
Ring volume 25
Beeper volume 25
Speaker volume 25
Automatic daylight savings time 26
Ecology features 26
Toner save 26
Sleep time 26
Turning off the scanner lamp 27
LCD contrast 27

4 Security features 28

Security 28
Setting lock 28
Secure Function Lock 29
Setting the password for the administrator 30
Setting up the Public user 30
Setting up restricted users 31
Turning Secure Function Lock on/off 31
Turning Secure Function Lock on 31
Turning Secure Function Lock off 31
Switching Users 32

Section II Fax

5 Sending a fax 34

How to fax 34
Entering fax mode 34
Sending a single-sided fax from the ADF 34
Sending a 2-sided fax from the ADF 34
Sending a fax from the scanner glass 35
Faxing legal size documents from the scanner glass 36
Cancelling a fax in progress 36
Broadcasting (black & white only) 36
Cancelling a broadcast in progress 37
Additional sending operations 37
Sending faxes using multiple settings 37
Electronic cover page (black & white only) 38
Contrast 39
Changing fax resolution 40
Dual access (black & white only) 41
Real time transmission 41
Overseas mode 42
Delayed fax (black & white only) 42
Delayed batch transmission (black & white only) 42
Checking and cancelling waiting jobs 43
Sending a fax manually 43
Out of memory message 43

6 Receiving a fax 44

Receive modes 44
Choosing the receive mode 44
Using receive modes 45
Fax Only 45
Fax/Tel 45
Manual 45
External TAD 45
Receive mode settings 46
Ring delay 46
F/T ring time 46
Fax Detect 47
Setting the print density 47
Additional receiving operations 48
Printing a reduced incoming fax 48
Duplex (2-sided) printing for Fax mode 48
Setting the fax receive stamp (black & white only) 48
Receiving faxes into memory (black & white only) 49
Printing a fax from the memory 49

7 Telephone and external devices 50

Telephone line services 50
Setting the telephone line type 50
BT call sign (U.K. only) 51
Connecting an external TAD 52
Connections 52
Recording an outgoing message (OGM) 53
Multi-line connections (PBX) 53
External and extension telephones 53
Operation from extension telephones 53
For Fax/Tel mode only 54
Connecting an external or extension telephone 54
Using a non-Brother cordless external handset 55
Using remote codes 55

8 Dialling and storing numbers 57

How to dial 57
Manual dialling 57
One-touch dialling 57
Speed-dialling 57
Search 58
LDAP Search 58
Fax redial 58
Storing numbers 59
Storing a pause 59
Storing one-touch dial numbers 59
Storing speed-dial numbers 60
Changing one-touch and speed-dial numbers 61
Setting up groups for broadcasting 62
Combining quick-dial numbers 63
Tone or pulse 63

9 Remote fax options (black & white only) 64

Fax forwarding 64
Fax storage 65
PC fax receive 65
Changing the destination PC 66
Changing remote fax options 66
Turning off remote fax options 67
Remote retrieval 67
Setting a remote access code 67
Using your remote access code 68
Retrieving fax messages 68
Changing the fax forwarding number 69
Remote fax commands 70

10 Polling 71

Polling receive 71
Secure polling 71
Delayed polling 72
Sequential polling 72
Polled transmit (black & white only) 73
Setup for polled transmit 73
Setup for polled transmit with a secure code 74

11 Printing reports 75

Fax reports 75
Transmission verification report 75
Fax journal 75
Reports 76
How to print a report 76

Section III Copy

12 Making copies 78

How to copy 78
Entering copy mode 78
Making a single copy 78
Making multiple copies 78
Stop copying 78
Copy options (temporary settings) 79
Changing copy quality 79
Enlarging or reducing the image copied 79
Making N in 1 copies (page layout) 80
Duplex (2-sided) copying 81
Sorting copies using the ADF 83
Adjusting brightness, contrast and colour 83
Tray selection 85
Out of memory message 85

Section IV Direct printing

13 Printing photos from a digital camera 88

Before using PictBridge 88
PictBridge requirements 88
Using PictBridge 88
Setting your digital camera 88
Printing images 89
DPOF printing 90
Connecting a camera as a storage device 90
Understanding the error messages 91

14 Printing data from a USB flash memory drive 92

Supported file formats 92
Creating a PRN or PostScript® 3 ™ file for direct printing 92
Printing data directly from the USB flash memory drive 93
Understanding the error messages 94

Section V Software

15 Software and network features 96

How to read HTML User's Guides 96
For Windows® 96
For Macintosh® 96

Section VI Appendixes

A Safety and legal 98

Choosing a location 98
Important information 99
Safety precautions 99
IEC60825-1+A2:2001 Specification 101
Disconnect device 102
Wiring information (U.K. only) 102
LAN connection 102
Radio interference 102
EU Directive 2002/96/EC and EN50419 103
EU Directive 2006/66/EC - Removing or Replacing the Battery 103
Important safety instructions 103
Legal limitations for copying 105
Trademarks 106

B Options 107

Optional paper tray 107
Installing the optional paper tray 107
Memory board 110
Installing extra memory 110

C Troubleshooting and routine maintenance 112

Troubleshooting 112
Solutions to common problems 112
Improving the print quality 119
Setting dial tone detection 130
Telephone line interference 130
Error and maintenance messages 131
Checking if the machine has faxes in its memory 137
Transferring faxes to another fax machine 137
Transferring faxes to your PC 137
Document jams 138
Paper jams 139
Routine maintenance 149
Cleaning the outside of the machine 149
Cleaning the scanner 150
Cleaning the laser scanner windows 151
Cleaning the corona wires 155
Cleaning the drum unit 159
Replacing the consumable items 167
Replacing a toner cartridge 169
Replacing the drum unit 174
Replacing the belt unit 181
Replacing the waste toner box 186
Packing and shipping the machine 192
Repacking the machine 193
Machine information 200
Checking the serial number 200
Checking the page counters 200
Checking the remaining life of parts 200

D Menu and features 201

On-screen programming 201
Menu table 201
Memory storage 201
Menu keys 201
How to access the menu mode 202
Menu table 203
Entering text 220

E Specifications 222

General 222
Print media 224
Fax 225
Copy 226
Scan 227
Print 228
Interfaces 229
PictBridge 229
Direct print feature 229
Computer requirements 230
Consumable items 231
Ethernet wired network 232
Ethernet wireless network 233
Authentication and encryption for wireless users only 234
Wi-Fi Alliance certification 235

F Glossary 236

G Index 240

Section I

General

General information	2
Loading paper and documents	11
General setup	22
Security features	28

1 General information

Using the documentation

Thank you for buying a Brother machine! Reading the documentation will help you make the most of your machine.

Symbols and conventions used in the documentation

The following symbols and conventions are used throughout the documentation.

Bold	Bold style identifies keys on the machine control panel or computer screen.
Italics	Italicized style emphasizes an important point or refers you to a related topic.
`Courier New`	Courier New font identifies the messages shown on the LCD of the machine.

Warning icons tell you what to do to avoid the risk of injury.

Electrical Hazard icons alert you to a possible electrical shock.

Hot Surface icons warn you not to touch machine parts that are hot.

Caution icons tell you about procedures you must follow to prevent damaging the machine.

Incorrect setup icons alert you to devices and operations that are not compatible with the machine.

Note icons give useful tips.

Accessing the User's Guides

The printed User's Guide does not contain all the information about your machine. The advanced features of the Printer, Network, Scanner, and PC Fax are explained in the Software and Network User's Guides that you can find on the CD-ROM.

Viewing documentation

Viewing documentation (Windows®)

To view the documentation, from the **Start** menu, point to **Brother**, **MFC-9840CDW** from the program group, and then click **User's Guides in HTML format**.

If you have not installed the software, you can find the documentation by following the instructions below:

1. Turn on your PC.
   Insert the Brother CD-ROM labelled Windows® into your CD-ROM drive.
2. If the language selection screen appears, click your language.
3. If the model name screen appears, click your model name.The CD-ROM main menu will appear.

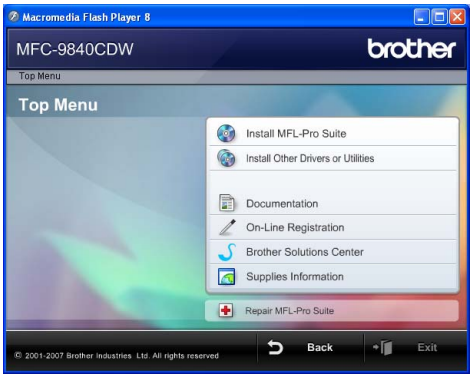

If this window does not appear, use Windows® Explorer to find and run the start.exe program from the root directory of the Brother CD-ROM.

4. Click **Documentation**.

5 Click the documentation you want to read:

- HTML documents (3 manuals): HTML User's Guide for stand-alone operations, Software User's Guide and Network User's Guide.

  This format is recommended for viewing on your computer.

- PDF documents (4 manuals): PDF User's Guide for stand-alone operations, Software User's Guide, Network User's Guide and Quick Setup Guide.

  This format is recommended for printing the manuals. Click to go to the Brother Solutions Center, where you can view or download the PDF documents. (Internet access and PDF Reader software are required.)

How to find scanning instructions

There are several ways you can scan documents. You can find the instructions as follows:

Software User's Guide:

- Scanning a document using the TWAIN driver in Chapter 2
- Scanning a document using the WIA driver (For Windows® XP/Windows Vista®) in Chapter 2
- Using ControlCenter3 in Chapter 3
- Network Scanning in Chapter 4

ScanSoft™ PaperPort™ 11SE with OCR How-to-Guides

- The complete ScanSoft™ PaperPort™ 11SE with OCR How-to-Guides can be viewed from the Help selection in the ScanSoft™ PaperPort™ 11SE with OCR application.

Viewing documentation (Macintosh®)

1 Turn on your Macintosh®.
Insert the Brother CD-ROM labelled Macintosh® into your CD-ROM drive.

2 The following window will appear.

3 Double-click the **Documentation** icon.

4 If the language selection screen appears, double-click your language.

5 Double-click the top page file to view the User's Guide, Software User's Guide and Network User's Guide in HTML format.

6 Click the documentation you want to read.

- User's Guide
- Software User's Guide
- Network User's Guide

Note

The documents are also available in PDF format (4 manuals):
PDF User's Guide for stand-alone operations, Software User's Guide, Network User's Guide and Quick Setup Guide.
The PDF format is recommended for printing the manuals.

Double-click **Brother Solutions Center** icon to go to the Brother Solutions Center, where you can view or download the PDF documents. (Internet access and PDF Reader software are required.)

How to find scanning instructions

There are several ways you can scan documents. You can find the instructions as follows:

Software User's Guide:

- Scanning in Chapter 9
- Using ControlCenter2 in Chapter 10
- Network Scanning in Chapter 11

Presto!® PageManager® User's Guide:

- The complete Presto!® PageManager® User's Guide can be viewed from the Help selection in the Presto!® PageManager® application.

Control panel overview

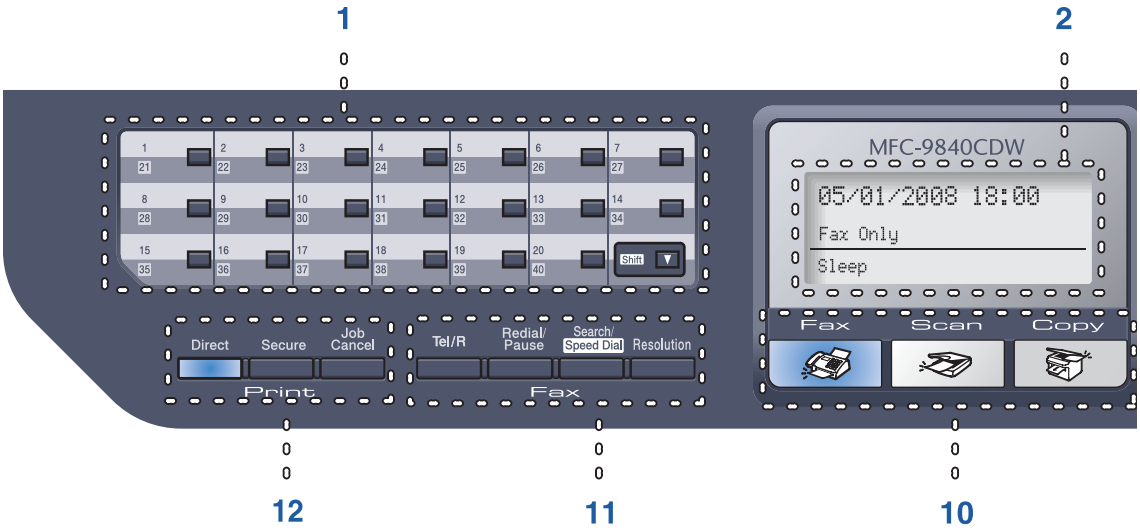

1 One-Touch keys

These 20 keys give you instant access to 40 previously stored numbers.

Shift

Lets you access One-Touch numbers 21 to 40 when held down.

2 LCD

Displays messages to help you set up and use your machine.

3 Status LED

The LED will flash and change colour depending on the machine's status.

4 Menu keys:

Menu

Lets you access the menu to program your settings in this machine.

Clear/Back

Deletes entered data or lets you cancel the current setting.

OK

Lets you store your settings in the machine.

Volume keys

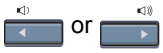 or

Press to scroll backwards or forwards through menu selections. Press to change the volume when in fax or standby mode.

▲ or ▼

Press to scroll through the menus and options.

5 Dial pad

Use these keys to dial telephone and fax numbers and as a keyboard for entering information into the machine.

The # key temporarily switches the dialling mode from Pulse to Tone during a telephone call.

6 Stop/Exit

Stops an operation or exits from a menu.

7 Start:

Colour

Lets you start sending faxes or making copies in full colour.

Mono

Lets you start sending faxes or making copies in black & white.

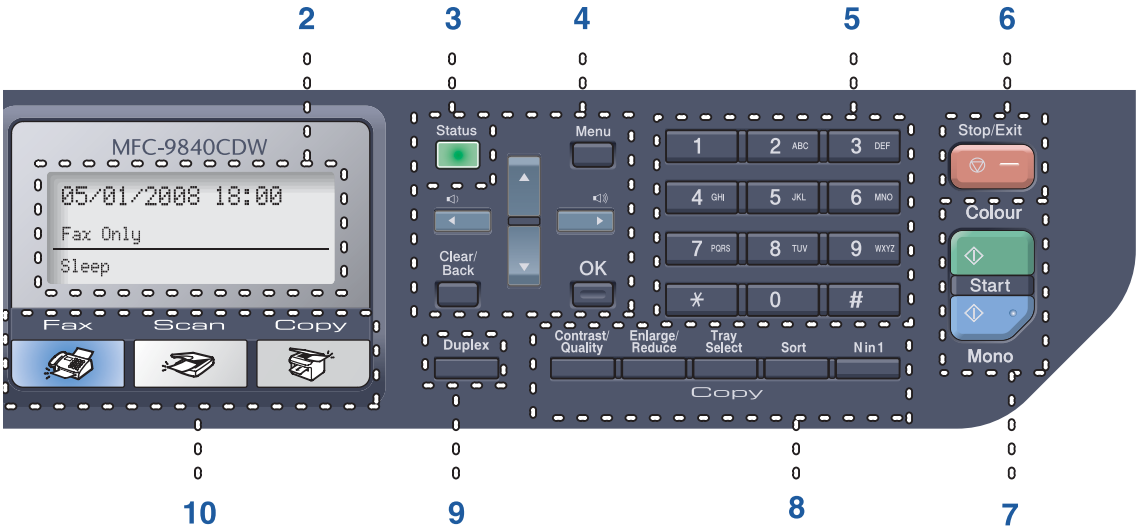

8 Copy keys:

Contrast/Quality

Lets you change the quality or contrast for the next copy.

Enlarge/Reduce

Reduce or enlarges copies.

Tray Select

Lets you change which tray will be used for the next copy.

Sort

Sorts multiple copies using the ADF.

N in 1

You can choose N in 1 copy to 2 or 4 pages onto one page.

9 Duplex

You can choose Duplex to copy on both sides of paper.

10 Mode keys:

Fax

Puts the machine in Fax mode.

Scan

Puts the machine in Scan mode. (For details about scanning, see the *Software User's Guide on the CD-ROM*.)

Copy

Puts the machine in Copy mode.

11 Fax and telephone keys:

Tel/R

Lets you answer an incoming call on an external telephone.

When connected to a PBX, you can use this key to gain access to an outside line, to recall an operator, or to transfer a call to another extension.

Redial/Pause

Redials the last number called. It also inserts a pause when programming quick dial numbers.

Search/Speed Dial

Lets you look up the stored number in the quick-dial memory and LDAP server.

You can search the stored number alphabetically.

It also lets you look up the stored number in Speed-Dial numbers by pressing **Shift** and **Search/Speed Dial** simultaneously and then the three-digit number.

Resolution

Sets the resolution when sending a fax.

12 Print keys:

Direct

Lets you print from a USB flash memory drive or Pictbridge compatible camera connected directly to the machine.

Secure

When using Secure Function Lock, you can switch restricted users by holding down **Shift** as you press **Secure**. (See *Secure Function Lock* on page 29.)

You can print data saved in memory when you enter your four-digit password. (For details about using the Secure key, see the *Software User's Guide on the CD-ROM*.)

Job Cancel

Cancels a programmed print job and clears print data in the machine's memory.

Status LED indications

The **Status** LED (light emitting diode) will flash and change colour depending on the machine's status.

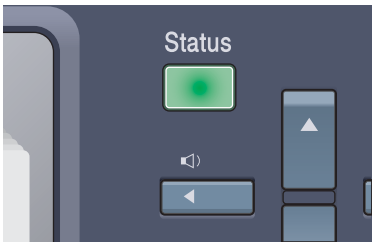

The LED indications shown in the table below are used in the illustrations in this chapter.

LED	LED Status
	LED is off.
Green Yellow Red	LED is on.
Green Yellow Red	LED is blinking.

LED	Machine Status	Description
	Sleep Mode	The power switch is off or the machine is in Sleep mode.
Green	Warming Up	The machine is warming up for printing.
Green	Ready	The machine is ready to print.
Yellow	Receiving Data	The machine is either receiving data from the computer, processing data in memory, or printing data.
Yellow	Data Remaining in Memory	Print data remains in the machine's memory.

LED	Machine Status	Description
Red	Service error	Follow the steps below. 1. Turn off the power switch. 2. Wait a few seconds, and then turn it back on and try to print again. If you cannot clear the error and you see the same service call indication after turning the machine back on, please call your Brother dealer.
Red	Cover open	The front cover or back cover is open. Close the cover.
	Toner life end	Replace the toner cartridge with a new one.
	Paper error	Put paper in the tray or clear the paper jam. Check the LCD message.
	Scan lock	Check that the scanner lock lever is released.
	Out of memory	Memory is full.
	Others	Check the LCD message.

Note

When the power switch is off or the machine is in sleep mode, the LED is off.

2 Loading paper and documents

Acceptable paper and other media

Recommended paper

To get the best print quality, we suggest using the following paper.

Paper Type	Item
Plain paper	Xerox Premier 80 g/m^2
	Xerox Business 80 g/m^2
Recycled paper	Xerox Recycled Supreme
Labels	Avery laser label L7163
Envelope	Antalis River series (DL)

Print quality may vary according to the type of paper you are using.

You can use the following types of media: plain paper, labels or envelopes.

For best results, follow the steps below:

- Use paper made for plain paper copying.
- Use paper that is 75 to 90 g/m^2.
- Use labels which are designed for use in laser printers.
- Avoid touching the printed surface of the paper immediately after printing.
- Use long grain paper with a neutral Ph value, and a moisture content of approx 5%.

CAUTION

DO NOT load envelopes, labels or thick paper (more than 105 g/m^2) into the paper tray or optional lower tray. It may cause paper jams.

Type and size of paper

The machine loads paper from the installed standard paper tray, multi-purpose tray, or optional lower tray.

Standard paper tray

Since the standard paper tray is a universal type, you can use any of the paper sizes (one paper type and size at a time) listed in the table in *Paper capacity of the paper trays* on page 12. The standard paper tray can hold up to 250 sheets of Letter/A4, legal and folio size paper (80 g/m^2). Paper can be loaded up to the maximum paper mark on the sliding paper width guide.

Multi-purpose tray (MP tray)

The MP tray can hold up to 50 sheets of paper (80 g/m^2) or up to 3 envelopes. Paper can be loaded up to the maximum paper mark on the sliding paper width guide.

Optional lower tray (LT-100CL)

The optional lower tray can hold up to 500 sheets of Letter/A4, legal and folio size paper (80 g/m^2). Paper can be loaded up to the top line of the maximum paper mark on the sliding paper width guide.

The names for the paper trays in the printer driver and this Guide are as follows:

Tray and optional unit	Name
Standard paper tray	Tray 1
Optional lower tray	Tray 2
Multi-purpose tray	MP tray

Paper capacity of the paper trays

	Paper size	Paper types	No. of sheets
Paper Tray (Tray #1)	A4, Letter, Legal, Executive, A5, A6, B5, B6 and Folio [1]	Plain paper, Thin paper and Recycled paper	up to 250 (80 g/m^2)
Multi-purpose tray (MP tray)	Width: 69.9 to 215.9 mm (2.75 to 8.5 in.) Length: 116.0 to 406.4 mm (4.57 to 16.0 in.)	Plain paper, Thin paper, Thick paper, Recycled paper, Bond paper, Envelope and Labels	up to 50 (plain paper) (80 g/m^2) up to 3 (envelopes)
Paper Tray (Tray #2)	A4, Letter, Legal, Executive, A5, B5, B6 and Folio [1]	Plain paper, Thin paper and Recycled paper	up to 500 (80 g/m^2)

[1] Folio size is 8 in. × 13 in.

Recommended paper specifications

The following paper specifications are suitable for this machine.

Basis weight (g/m^2)	75-90
Thickness (µm)	80-110
Roughness (sec.)	Higher than 20
Stiffness (cm^3/100)	90-150
Grain direction	Long grain
Volume resistivity (ohm)	10e^9-10e^{11}
Surface resistivity (ohm-cm)	10e^9-10e^{12}
Filler	$CaCO_3$ (Neutral)
Ash content (wt%)	Below 23
Brightness (%)	Higher than 80
Opacity (%)	Higher than 85

Handling and using special paper

The machine is designed to work well with most types of xerographic and bond paper. However, some paper variables may have an effect on print quality or handling reliability. Always test samples of paper before purchasing to ensure desirable performance. Store paper in its original packaging and keep it sealed. Keep the paper flat and away from moisture, direct sunlight and heat.

Some important guidelines when selecting paper are:

- Your supplier should be informed that the paper or envelopes will be used in a colour laser machine.
- Preprinted paper must use inks that can withstand the temperature of the machine's fusing process (200 degrees centigrade for a period of 0.1 seconds).
- If you have selected a cotton bond paper, paper having a rough surface, such as cockle or laid finished paper or paper that is wrinkled or puckered, the paper may exhibit degraded performance.

Types of paper to avoid

CAUTION

Some types of paper may not perform well or may cause damage to your machine.

DO NOT use paper:

- that is highly textured
- that is extremely smooth or shiny
- that is curled or warped

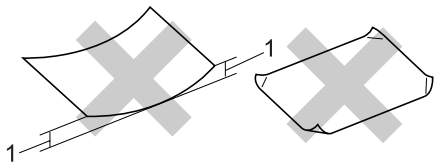

1 2 mm or greater

- that is coated or has a chemical finish
- that is damaged, creased or folded
- that exceeds the recommended weight specification in this guide
- with tabs and staples
- with letterheads using low temperature dyes or thermography
- that is multipart or carbonless
- that is designed for inkjet printing

If you use any of the types of paper listed above, they may damage your machine. This damage is not covered under any Brother warranty or service agreement.

Envelopes

Most envelopes will be suitable for your machine. However, some envelopes may have print-quality problems because of the way they have been made. A suitable envelope should have edges with straight, well-creased folds and the leading edge should not be thicker than two pieces of paper. The envelope should lie flat and not be of baggy or flimsy construction. You should buy quality envelopes from a supplier who understands that you will be using the envelopes in a laser machine.

Envelopes can only be fed from the MP tray.

Before you put envelopes in the tray, check the following:

- Envelopes should have a lengthwise sealing flap.
- The sealing flaps should be folded crisply and correctly (irregularly cut or folded envelopes may cause paper jams).
- Envelopes should have two layers of paper in the areas circled below.

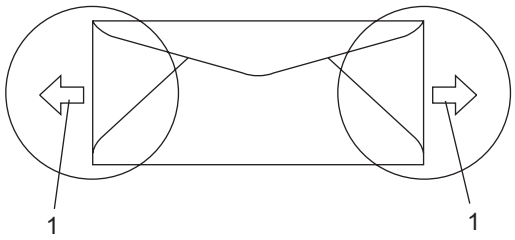

1 Feeding direction

Note

- Before you print envelopes, you must ‘fan’ the stack to avoid paper jams and misfeeds.
- Before you print a lot of envelopes, test one to make sure that the print results are what you want.
- Envelope joints that are sealed by the manufacturer should be secure.
- DO NOT put different types of paper in the paper tray at the same time because it may cause paper jams or misfeeds.
- For correct printing, you must choose the same paper size from your software application as the paper in the tray.
- We recommend that you do not print within 15 mm of the edges of the envelopes.
- See *Acceptable paper and other media* on page 11.

Types of envelopes to avoid

CAUTION

DO NOT use envelopes:

- that are damaged, curled, wrinkled or an unusual shape
- that are extremely shiny or textured
- with clasps, staples, snaps or tie strings
- with self-adhesive closures
- that are of a baggy construction
- that are not sharply creased
- that are embossed (have raised writing on them)
- that were previously printed by a laser machine
- that are pre-printed on the inside
- that cannot be arranged neatly when stacked
- that are made of paper that weighs more than the paper weight specifications for the machine
- with edges that are not straight or consistently square
- with windows, holes, cut-outs or perforations
- with glue on the surface as shown in the figure below

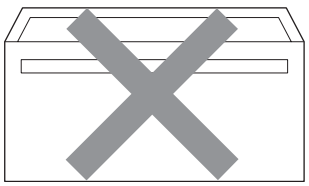

- with double flaps as shown in the figure below

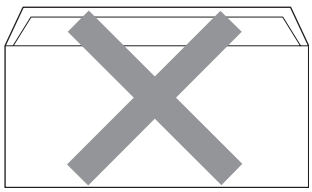

- with sealing flaps that have not been folded at purchase
- with sealing flaps as shown in the figure below

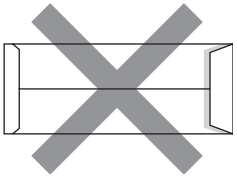

- with each side folded as shown in the figure below

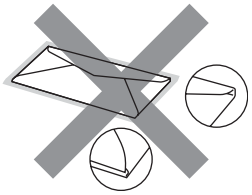

If you use any of the types of envelopes listed above, they may damage your machine. This damage is not covered under any Brother warranty or service agreement.

Occasionally you may experience paper feed problems caused by the thickness, size and flap shape of the envelopes you are using.

Labels

The machine will print on most types of labels designed for use with a laser machine. Labels should have an adhesive that is acrylic-based since this material is more stable at the high temperatures in the fuser unit. Adhesives should not come in contact with any part of the machine, because the label stock may stick to the belt unit or rollers and cause jams and print quality problems. No adhesive should be exposed between the labels. Labels should be arranged so that they cover the entire length and width of the sheet. Using labels with spaces may result in labels peeling off and causing serious jams or print problems.

All labels used in this machine must be able to withstand a temperature of 392 degrees Fahrenheit (200 degrees centigrade) for a period of 0.1 seconds.

Label sheets should not exceed the paper weight specifications described in this User's Guide. Labels exceeding this specification may not feed or print properly and may cause damage to your machine.

Labels can be fed from the MP tray only.

Types of labels to avoid

Do not use labels that are damaged, curled, wrinkled or an unusual shape.

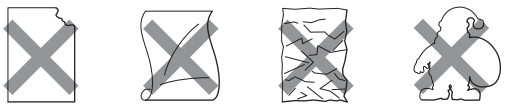

CAUTION

DO NOT feed part used label sheets. The exposed carrier sheet will damage your machine.

Unprintable area

Unprintable area for copies

The printable area begins at approximately 4 mm (0.16 in.) from the top and bottom and 2 mm (0.08 in.) from both sides of the paper.

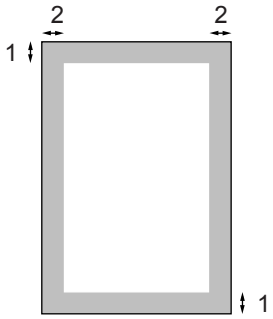

1 4 mm

2 2 mm

Note

This unprintable area shown above is for a single copy or a 1 in 1 copy using A4 size paper. The unprintable area changes with the paper size.

Unprintable area when printing from a computer

When using the default driver the printable area is smaller than the paper size, as shown below.

Portrait

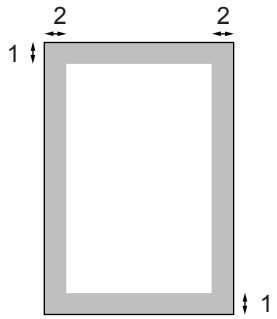

1 4.23 mm

2 4.23 mm

Landscape

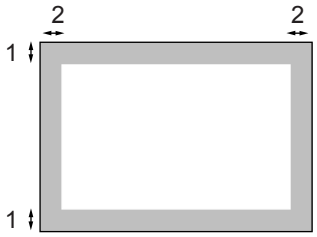

1 4.23 mm

2 4.23 mm

Note

The unprintable area shown above is for A4 size paper. The unprintable area changes with the paper size.

Loading paper and envelopes

The machine can feed paper from the standard paper tray, optional lower tray or multi-purpose tray.

When printing on plain paper 60 to 105 g/m^2 use the paper tray.

For printing on other types of media use the MP tray (multi-purpose tray).

When you put paper into the paper tray, note the following:

- If your application software supports paper size selection on the print menu, you can select it through the software. If your application software does not support it, you can set the paper size in the printer driver or by using the control panel buttons.
- Before using paper that has holes in it, such as organizer sheets, you must ‘fan’ the stack to avoid paper jams and misfeeds.

Loading plain paper in the paper tray

1. Unfold the output paper tray support flap (1).

2. Pull the paper tray completely out of the machine.

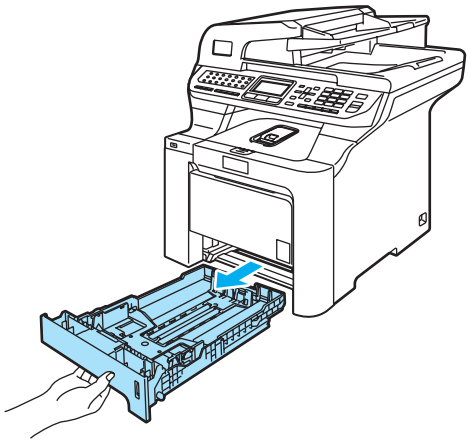

3. While pressing the green paper-guide release lever (1), slide the paper guides to fit the paper size. Make sure that the guides are firmly in the slots.

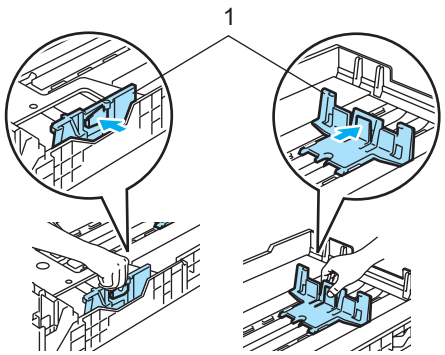

4. Fan the stack of paper well to avoid paper feeding problems.

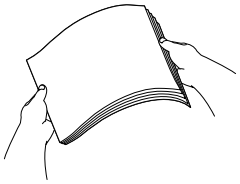

5. Put the paper into the paper tray with the top edge of the paper in first and the print side face down.
Make sure that the paper is flat in the tray and below the maximum paper mark (1).

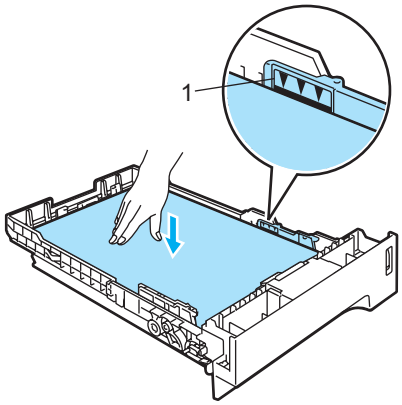

6. Push the paper tray firmly back into the machine.

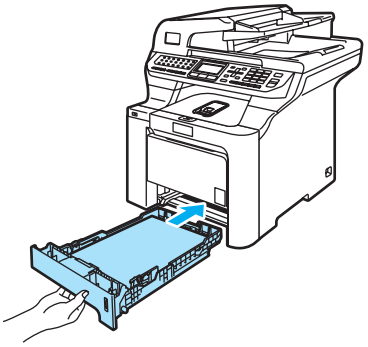

Loading envelopes or other media in the multi-purpose tray (MP tray)

Use the MP tray when printing envelopes, labels, and thick paper.

Before loading, press the corners and sides of the envelopes to make them as flat as possible.

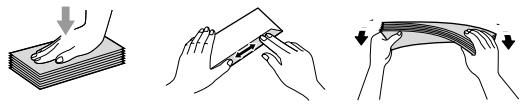

1. Unfold the output paper tray support flap (1).

2. Open the MP tray and lower it gently.

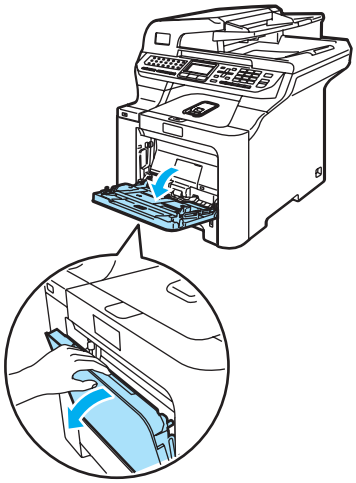

3. Pull out the MP tray support flap (1).

4. Put the envelopes (up to 3) or media in the MP tray with the top edge first and the print side face up.

Loading documents

You can send a fax, make copies, and scan from the ADF (automatic document feeder) and from the scanner glass.

Using the ADF (automatic document feeder)

The ADF can hold up to 50 pages and feeds each sheet individually. Use standard 80 g/m^2 paper and always fan the pages before putting them in the ADF.

CAUTION

DO NOT leave thick documents on the scanner glass. If you do this, the ADF may jam.

DO NOT use paper that is curled, wrinkled, folded, ripped, stapled, paper-clipped, pasted or taped.

DO NOT use cardboard, newspaper or fabric.

- Make sure documents written with ink are completely dry.
- Documents to be faxed must be from 147.3 to 215.9 mm (5.8 to 8.5 inches) wide and 147.3 to 356 mm (5.8 to 14 inches) long, and of a standard weight (80 g/m^2).

1. Unfold the ADF document output support flap (1) and the ADF support flap (2).

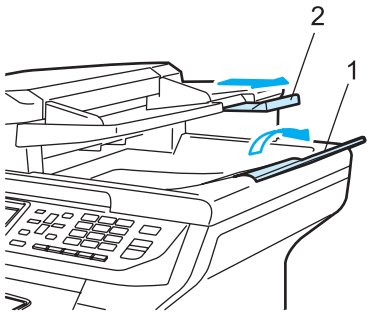

2. Fan the pages well.
3. Place your document, face up top edge first, in the ADF until you feel it touch the feed roller.
4. Adjust the paper guides to fit the width of your document.

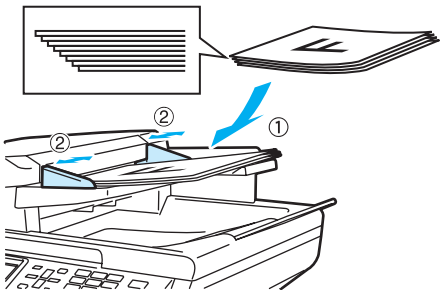

CAUTION

To avoid damaging your machine while using the ADF, DO NOT pull on the document while it is feeding.

To scan non-standard documents see *Using the scanner glass* on page 21.

Using the scanner glass

You can use the scanner glass to fax, scan, or copy the pages of a book or one page at a time. Documents can be up to 215.9 mm wide to 355.6 mm long (8.5 inches wide to 14 inches long).

To use the scanner glass, the ADF must be empty.

1. Lift the document cover.
2. Using the document guidelines on the left, centre the document face down on the scanner glass.

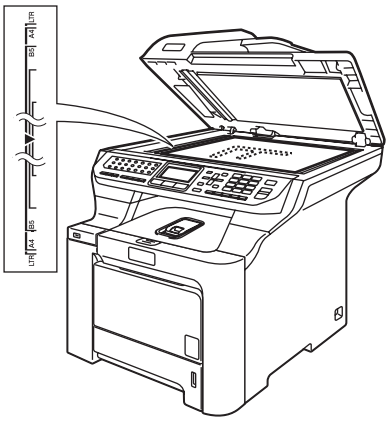

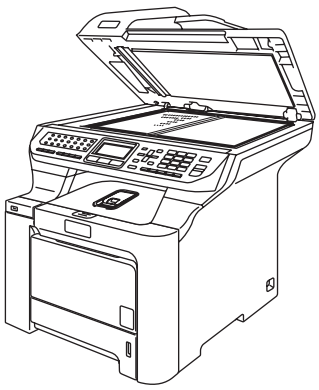

3. Close the document cover.

CAUTION

If the document is a book or is thick, DO NOT slam the cover or press on it.

3 General setup

Mode timer

The machine has three mode keys on the control panel: **Fax**, **Scan**, and **Copy**.

You can set how much time the machine takes after the last Copy or Scan operation to return to Fax mode. If you choose `Off`, the machine will stay in the mode you used last.

Also, this setting sets the time the machine will change from individual user to public user when using Secure Function Lock.
(See *Secure Function Lock* on page 29.)

1. Press **Menu**, **1**, **1**.

```
11.Mode Timer
▲    2 Mins
     5 Mins
▼    Off
Select ▲▼ or OK
```

2. Press ▲ or ▼ to choose `0 Sec`, `30 Secs`, `1 Min`, `2 Mins`, `5 Mins` or `Off`.
   Press **OK**.

3. Press **Stop/Exit**.

Paper settings

Paper type

Set up the machine for the type of paper you are using. This will give you the best print quality.

1. Do one of the following:
   - To set the paper type for the `MP Tray` press **Menu**, **1**, **2**, **1**.
   - To set the paper type for `Tray#1` press **Menu**, **1**, **2**, **2**.
   - To set the paper type for `Tray#2` press **Menu**, **1**, **2**, **3** if you installed the optional tray.

```
12.Paper Type
  1.MP Tray
▲    Plain
▼    Thick
Select ▲▼ or OK
```

2. Do one of the following:
   - For `Tray#1` and `Tray#2` press ▲ or ▼ to choose `Thin`, `Plain` or `Recycled Paper`.
   - For `MP Tray` press ▲ or ▼ to choose `Thin`, `Plain`, `Thick`, `Thicker` or `Recycled Paper`.
     Press **OK**.

3. Press **Stop/Exit**.

Paper size

You can use nine sizes of paper for printing copies: A4, Letter, Legal, Executive, A5, A6, B5, B6 and Folio, and four sizes for printing faxes: A4, Letter, Legal or Folio (8"×13").

When you change the size of paper in the tray, you will also need to change the setting for paper size at the same time so your machine can fit the document or an incoming fax on the page.

1. Do one of the following:
   - To set the paper size for the `MP Tray` press **Menu**, **1**, **3**, **1**.
   - To set the paper size for `Tray#1` press **Menu**, **1**, **3**, **2**.
   - To set the paper size for `Tray#2` press **Menu**, **1**, **3**, **3** if you installed the optional tray.

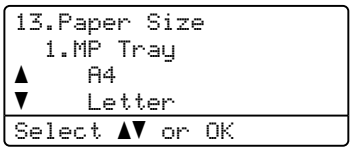

2. Press ▲ or ▼ to choose `A4`, `Letter`, `Legal`, `Executive`, `A5`, `A6`, `B5`, `B6`, `Folio` or `Any`.
   Press **OK**.

3. Press **Stop/Exit**.

Note

- `Any` (size) appears only when you choose the MP tray (**Menu**, **1**, **3**, **1**).
- If you choose `Any` for the MP Tray Paper Size, you must choose `MP Only` for the Tray Use setting.
- You cannot use the `Any` Paper Size option for the MP tray when making N in 1 copies. You must choose one of the other available Paper Size selections for the MP tray.
- A6 size is not available for the optional Tray #2.

Tray use in copy mode

You can change the priority tray that the machine will use for printing copies.

When you choose `Tray#1 Only`, `MP Only` or `Tray#2 Only` [1], the machine loads the paper only from that tray. If the selected tray is out of paper, `No Paper` will appear on the LCD. Insert the paper in the empty tray.

To change the tray setting follow the instructions below:

1. Press **Menu**, **1**, **7**, **1**.

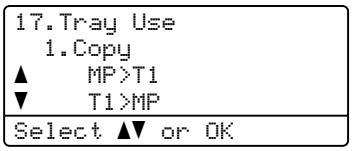

2. Press ▲ or ▼ to choose `Tray#1 Only`, `Tray#2 Only` [1], `MP Only`, `MP>T1>T2` [1] or `T1>T2` [1]`>MP`.
   Press **OK**.

   [1] `Tray#2 Only` or `T2` appears only if the optional tray is installed.

3. Press **Stop/Exit**.

Note

- The ADF can detect the document size. When loading the documents from the ADF and `MP>T1>T2` or `T1>T2>MP` is selected, the machine looks for the tray with the most suitable paper and pulls paper from that tray.
- When using the scanner glass, your document is copied from the higher priority tray even if more suitable paper is in another paper tray.

Tray use in fax mode

You can change the default tray that the machine will use for printing received faxes.

When you choose Tray#1 Only, MP Only or Tray#2 Only [1], the machine loads the paper only from that tray. If the selected tray is out of paper, No Paper will appear on the LCD. Insert the paper in the empty tray.

When you choose T1>T2 [1]>MP, the machine takes paper from Tray #1 until it is empty, then from Tray #2, and then from the MP tray.

When you choose MP>T1>T2 [1], the machine takes paper from the MP tray until it is empty, then from Tray #1, and then from Tray #2.

Note

- You can use four sizes of paper for printing faxes: A4, Letter, Legal or Folio. When a suitable size is not in any of the trays received faxes will be stored in the machine's memory and Check Paper Size will appear on the LCD. (For details, see *Error and maintenance messages* on page 131.)
- If the tray is out of paper and received faxes are in the machine's memory, No Paper will appear on the LCD. Insert paper in the empty tray.

1. Press **Menu**, **1**, **7**, **2**.

```
17.Tray Use
  2.Fax
▲    MP>T1
▼    T1>MP
Select ▲▼ or OK
```

2. Press ▲ or ▼ to choose Tray#1 Only, Tray#2 Only, MP Only, MP>T1>T2 [1] or T1>T2 [1]>MP.
   Press **OK**.

   [1] Tray#2 Only or T2 appears only if the optional tray is installed.

3. Press **Stop/Exit**.

Tray use in print mode

You can change the default tray the machine will use for printing from your computer.

1. Press **Menu**, **1**, **7**, **3**.

```
17.Tray Use
  3.Print
▲    MP>T1
▼    T1>MP
Select ▲▼ or OK
```

2. Press ▲ or ▼ to choose Tray#1 Only, Tray#2 Only [1], MP Only, MP>T1>T2 [1] or T1>T2 [1]>MP.
   Press **OK**.

   [1] Tray#2 Only or T2 appears only if the optional tray is installed.

3. Press **Stop/Exit**.

Note

- The setting in the printer driver will take priority over the setting made on the control panel.
- If the control panel is set to Tray#1 Only, MP Only or Tray#2 Only [1] and you choose **Auto Select** in the printer driver, the machine loads the paper from that tray.

[1] Tray#2 Only or T2 appears only if the optional tray is installed.

Volume settings

Ring volume

You can choose a ring volume level from a range of settings, from `High` to `Off`.

While in Fax mode press or to adjust the volume level. The LCD shows the current setting, and each key press will change the volume to the next level. The machine will keep the new setting until you change it.

You can also change the ring volume through the menu:

1. Press **Menu**, **1**, **4**, **1**.

```
14.Volume
  1.Ring
▲    Med
▼    High
Select ▲▼ or OK
```

2. Press ▲ or ▼ to choose `Off`, `Low`, `Med` or `High`.
   Press **OK**.
3. Press **Stop/Exit**.

Beeper volume

When the beeper is on, the machine will beep when you press a key, make a mistake, or after you send or receive a fax. You can choose a range of volume levels, from `High` to `Off`.

1. Press **Menu**, **1**, **4**, **2**.

```
14.Volume
  2.Beeper
▲    Med
▼    High
Select ▲▼ or OK
```

2. Press ▲ or ▼ to choose `Off`, `Low`, `Med` or `High`.
   Press **OK**.
3. Press **Stop/Exit**.

Speaker volume

You can choose a range of speaker volume levels, from `High` to `Off`.

You can change the speaker volume through the menu:

1. Press **Menu**, **1**, **4**, **3**.

```
14.Volume
  3.Speaker
▲    Med
▼    High
Select ▲▼ or OK
```

2. Press ▲ or ▼ to choose `Off`, `Low`, `Med` or `High`.
   Press **OK**.
3. Press **Stop/Exit**.

Automatic daylight savings time

You can set the machine to change automatically for Daylight Savings Time. It will set itself forward one hour in the Spring, and back one hour in the Autumn.

1. Press **Menu**, **1**, **5**.

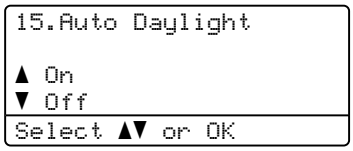

2. Press ▲ or ▼ to choose `On` (or `Off`).
Press **OK**.

3. Press **Stop/Exit**.

Ecology features

Toner save

You can save toner using this feature. When you set toner save to `On`, print appears lighter. The default setting is `Off`.

1. Press **Menu**, **1**, **6**, **1**.

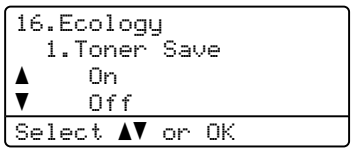

2. Press ▲ or ▼ to choose `On` (or `Off`).
Press **OK**.

3. Press **Stop/Exit**.

Note

We DO NOT recommend Toner Save for printing Photo or Greyscale images.

Sleep time

Setting the sleep time reduces power consumption by turning off the fuser while the machine is idle.

You can choose how long the machine must be idle (from 000 to 240 minutes) before it goes into sleep mode. When the machine receives a fax, computer data, or makes a copy, the timer will be reset. The default setting is 005 minutes.

While the machine is in sleep mode the LCD will display `Sleep`. When printing or copying in sleep mode, there will be a short delay while the fuser warms up.

1. Press **Menu**, **1**, **6**, **2**.

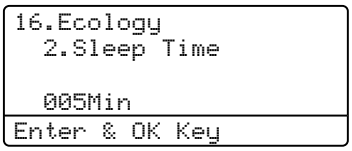

2. Enter the length of time the machine is idle before entering sleep mode (000 to 240).
Press **OK**.

3. Press **Stop/Exit**.

Turning off the scanner lamp

The scanner lamp stays on for 30 minutes before automatically switching off to preserve the life of the lamp and reduce power consumption.

To turn the scanner lamp off manually press the ◄ and ► keys simultaneously. The scanner lamp will remain turned off until the next time you use the scanning feature.

Note

Turning the lamp off regularly will reduce the lamp's life.

LCD contrast

You can change the contrast to make the LCD look lighter or darker.

1. Press **Menu**, **1**, **8**.

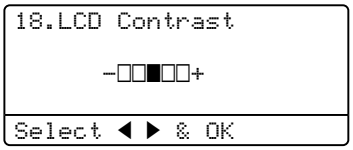

2. Press ► to make the LCD darker. Or, press ◄ to make the LCD lighter. Press **OK**.

3. Press **Stop/Exit**.

4 Security features

Security

You can set up your machine with multiple levels of security using Setting Lock and Secure Function Lock. You will not be able to continue to schedule Delayed Faxes. However, any prescheduled Delayed Faxes will be sent even if you turn on Secure Function Lock, so they won't be lost.

Setting lock

Setting Lock lets you set a password to stop other people from accidentally changing your machine settings.

Make a careful note of your password. If you forget it, please call your Brother dealer.

While Setting Lock is `On`, you cannot change the following settings without a password:

- Date/Time
- Station ID
- Quick-Dial settings
- Mode Timer
- Paper Type
- Paper Size
- Volume
- Auto Daylight
- Ecology
- Tray Use
- LCD Contrast
- Setting Lock
- Secure Function Lock

Setting up the password

1. Press **Menu**, **1**, **9**, **1**.

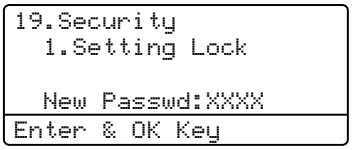

2. Enter a four-digit number for the password using numbers **0**-**9**, ∗ or **#**.
Press **OK**.

3. Re-enter your password when the LCD shows `Verify:`.
Press **OK**.

4. Press **Stop/Exit**.

Changing your setting lock password

1. Press **Menu**, **1**, **9**, **1**.

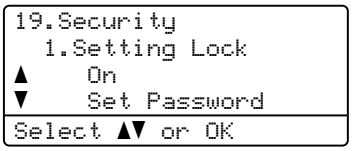

2. Press ▲ or ▼ to choose `Set Password`.
Press **OK**.

3. Enter your four-digit password.
Press **OK**.

4. Enter a four-digit number for the new password.
Press **OK**.

5. Re-enter your new password when the LCD shows `Verify:`.
Press **OK**.

6. Press **Stop/Exit**.

Turning setting lock on/off

If you enter the wrong password when following the instructions below, the LCD will show `Wrong Password`. Re-enter the correct password.

Turning setting lock on

1. Press **Menu**, **1**, **9**, **1**.

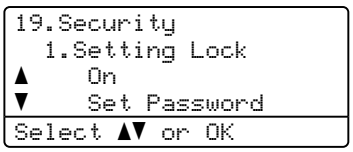

2. Press ▲ or ▼ to choose `On`.
Press **OK**.

3. Enter your four-digit password.
Press **OK**.

4. Press **Stop/Exit**.

Turning setting lock off

1. Press **Menu**, **1**, **9**, **1**.

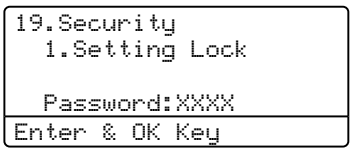

2. Enter your four-digit password.
Press **OK** twice.

3. Press **Stop/Exit**.

Secure Function Lock

Secure Function Lock lets you restrict Public access to certain machine functions (Fax Tx, Fax Rx, Copy, Scan and Print [1]).
This feature also prevents users from changing the Default settings of the machine by limiting access to the Menu settings.

Disabling at least one function is required to turn on Secure Function Lock for the Public user.

Access to restricted operations can be enabled by creating a restricted user. Restricted users must select the stored name and enter a password to use the machine.

Make a careful note of your password. If you forget it, please call your Brother dealer.

[1] Print includes PC-Fax Send as well as print jobs.

Note

- You can set up to 25 individual users and one Public user.
- When you set up a Public user, you can restrict one or more of the machine's functions to all users who do not have a password.
- Only administrators can set limitations and make changes for each user.
- When Print is disabled, PC print jobs will be lost without notification.
- When Secure Function Lock is on, you can only use `21.Contrast`, `26.Polled TX` or `27.Coverpg Setup` in the Fax menu.
- Polling Receive is enabled only when the both Fax Tx and Fax Rx are enabled.

Setting the password for the administrator

The password you set in these steps is for the administrator. This password is used to set up users and to turn Secure Function Lock on or off. See *Setting up restricted users* on page 31 and *Turning Secure Function Lock on* on page 31.

1. Press **Menu**, **1**, **9**, **2**.

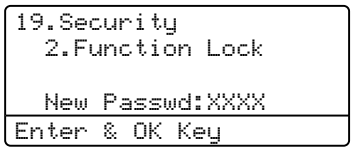

2. Enter a four-digit number for the password using numbers **0-9**, ✳ or **#**.
Press **OK**.

3. Re-enter the password when the LCD shows `Verify`.
Press **OK**.

4. Press **Stop/Exit**.

Setting up the Public user

You can set up the Public user. Public users do not need to enter a password.

Note

You must disable at least one function to turn on Secure Function Lock for Public user.

1. Press **Menu**, **1**, **9**, **2**.

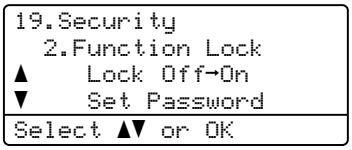

2. Press ▲ or ▼ to select `Setup User`.
Press **OK**.

3. Enter the administrator password.
Press **OK**.

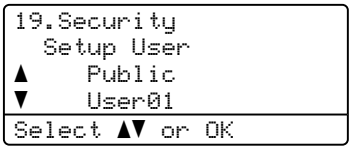

4. Press ▲ or ▼ to select `Public`.
Press **OK**.

5. Press ▲ or ▼ to select `Enable` or `Disable` for `Fax Tx`.
Press **OK**.
After you have set `Fax Tx`, repeat this step for `Fax Rx`, `Copy(Color)`, `Copy(B&W)`, `Scan` and `Print`.
Press **OK**.

Note

You can set PC print for only the Public user. When Print is disabled for the Public user, all restricted users will be unable to use the Print function.

6. Press **Stop/Exit**.

Setting up restricted users

You can set up users with restrictions and a password.

1. Press **Menu**, **1**, **9**, **2**.

```
19.Security
  2.Function Lock
▲    Lock Off→On
▼    Set Password
Select ▲▼ or OK
```

2. Press ▲ or ▼ to select `Setup User`.
Press **OK**.

3. Enter the administrator password.
Press **OK**.

```
19.Security
  Setup User
▲    Public
▼    User01
Select ▲▼ or OK
```

4. Press ▲ or ▼ to select `User01`.
Press **OK**.

5. Use the numeric keys to enter the user name. (See *Entering text* on page 220.)
Press **OK**.

6. Enter a four-digit password for the user.
Press **OK**.

7. Press ▲ or ▼ to select `Enable` or `Disable` for `Fax Tx`.
Press **OK**.
After you have set `Fax Tx`, repeat this step for `Fax Rx`, `Copy(Color)`, `Copy(B&W)` and `Scan`.
Press **OK**.

8. Repeat ❹ to ❼ for entering each additional user and password.

9. Press **Stop/Exit**.

Note

You cannot use the same password as another user's password.

Turning Secure Function Lock on/off

If you enter the wrong password when following the instructions below, the LCD will show `Wrong Password`. Re-enter the correct password.

Turning Secure Function Lock on

1. Press **Menu**, **1**, **9**, **2**.

```
19.Security
  2.Function Lock
▲    Lock Off→On
▼    Set Password
Select ▲▼ or OK
```

2. Press ▲ or ▼ to select `Lock Off→On`.
Press **OK**.

3. Enter your four-digit administrator password.
Press **OK**.

Turning Secure Function Lock off

1. Press **Menu**, **1**, **9**, **2**.

```
19.Security
  2.Function Lock
▲    Lock On→Off
▼    Change User
Select ▲▼ or OK
```

2. Press ▲ or ▼ to select `Lock On→Off`.
Press **OK**.

3. Enter your four-digit administrator password.
Press **OK**.

Switching Users

This setting allows a restricted user to log on the machine when Secure Function Lock is turned on.

Note

After a restricted user has finished using the machine, it will return to the Public setting within the same time as the Mode Timer setting (**Menu**, **1**, **1**). (See *Mode timer* on page 22. Also, you can exit from an individual user by pressing the lighted Mode key.)

1. Hold down **Shift** as you press **Secure**.

2. Enter your four-digit password.
Press **OK**.

When Copy mode is disabled:

1. Press **Copy** key.

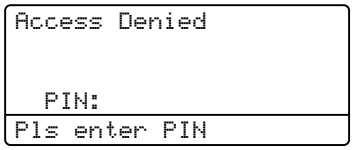

2. Enter your four-digit password.
Press **OK**.

When Scan mode is disabled:

1. Press **Scan** key.

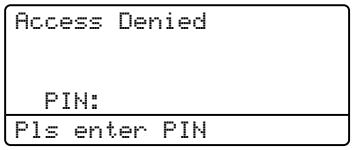

2. Enter your four-digit password.
Press **OK**.

Section II

Fax

Sending a fax	34
Receiving a fax	44
Telephone and external devices	50
Dialling and storing numbers	57
Remote fax options (black & white only)	64
Polling	71
Printing reports	75

5 Sending a fax

How to fax

Entering fax mode

To enter fax mode press (**Fax**), and the key will glow blue.

Sending a single-sided fax from the ADF

Using the ADF to send your faxes is the easiest way.

1. Make sure you are in Fax mode .
2. Put your document *face up* in the ADF.
3. Dial the fax number. (See *How to dial* on page 57.)
4. Press **Mono Start** or **Colour Start**.
   - If you press **Mono Start**, the machine scans the pages into memory and then sends the document.
   - If you press **Colour Start**, the machine starts dialling and sends the document in real time.

Note

- To cancel a fax in progress press **Stop/Exit**.
- If the `Out of Memory` message appears while scanning a B&W document into memory, press **Stop/Exit** to cancel or **Mono Start** to send the scanned pages.

Sending a 2-sided fax from the ADF

You can send a 2-sided document from the ADF. To cancel a fax in progress press **Stop/Exit**.

1. Make sure you are in Fax mode .
2. Place your document in the ADF.
3. Press **Duplex**.
4. Dial the fax number. (See *How to dial* on page 57.)
5. Press **Mono Start**.

Note

Legal size 2-sided documents cannot be faxed from the ADF.

Changing a 2-sided fax layout

You need to choose the duplex scanning format before you send a fax. The format you choose will depend on the layout of your 2-sided document.

1. Press **Menu**, **1**, **0**, **2**.

```
10.Document Scan
  2.Duplex Scan
▲    Long edge
▼    Short edge
Select ▲▼ or OK
```

2. Do one of the following:

   - If your document is flipped on the Long edge, press ▲ or ▼ to choose `Long edge`.

     Press **OK**.

Long edge	
Portrait	Landscape
	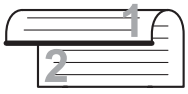

   - If your document is flipped on the Short edge, press ▲ or ▼ to choose `Short edge`.

     Press **OK**.

Short edge	
Portrait	Landscape

3. Press **Stop/Exit**.

Sending a fax from the scanner glass

You can use the scanner glass to fax the pages of a book, or a single page at a time. The documents can be up to Letter or A4, Legal or Folio size.

You can only send single page colour faxes from the scanner glass.

1. Make sure you are in Fax mode .
2. Put your document *face down* on the scanner glass.
3. Dial the fax number. (See *How to dial* on page 57.)
4. Press **Mono Start** or **Colour Start**.
   - If you press **Mono Start**, the machine starts scanning the first page. Go to ❺.
   - If you press **Colour Start**, the machine starts sending. Go to ❼.
5. After the machine scans the page, the LCD will prompt you to choose one of the options below:

```
Flatbed Fax:
 Next Page?
▲  1.Yes
▼  2.No (Send)
Select ▲▼ or OK
```

   - Press **1** to send another page. Go to ❻.
   - Press **2** or **Mono Start** to send the document. Go to ❼.
6. Place the next page on the scanner glass, press **OK**. Repeat ❺ and ❻ for each additional page.

```
Flatbed Fax:

Set Next Page
Then Press OK
```

7 Your machine will automatically send the fax.

Note

- Press **Stop/Exit** to cancel a fax in progress.
- When faxing multiple pages from the scanner glass, real time transmission should be set to `Off`.

Faxing legal size documents from the scanner glass

When faxing legal size documents, you need to set the scan glass size to `Legal/Folio` otherwise a portion of your faxes will be missing.

1 Make sure you are in Fax mode .

2 Press **Menu**, **1**, **0**, **1**.

```
10.Document Scan
  1.Glass ScanSize
▲    A4/Letter
▼    Legal/Folio
Select ▲▼ or OK
```

3 Press ▲ or ▼ to choose `Legal/Folio`.
Press **OK**.

4 Press **Stop/Exit**.

Cancelling a fax in progress

Press **Stop/Exit** to cancel a fax in progress. If the machine is already dialling or sending the fax you will also need to press **1** to confirm.

Broadcasting (black & white only)

Broadcasting lets you send the same fax message to more than one fax number. You can include Groups, One-Touch, Speed-Dial numbers and up to 50 manually dialled numbers in the same broadcast.

You can broadcast up to 390 different numbers. This will depend on how many groups, access codes or credit card numbers you have stored, and on how many delayed or stored faxes in memory.

Note

Use the **Search/Speed Dial** to help you choose numbers easily.

1 Make sure you are in Fax mode .

2 Load your document.

3 Enter a number.
Press **OK**.
You can use either a One-Touch, Speed-Dial, a Group number, or a number manually entered using the dial pad. (See *How to dial* on page 57.)

4 Repeat ❸ until you have entered all the fax numbers you want to broadcast to.

5 Press **Mono Start**.

After the broadcast is finished the machine will print a broadcast report to let you know the results.

Note

- You can only send to IFAX numbers in `Standard`, `Fine` or `Photo` resolution.
- The Scan profile of the One-Touch, Speed-Dial or Group number you choose first will be applied to the broadcast.
- If the fax resolution of the fax number you choose first is `S.Fine` and you enter a stored IFAX number, `Select:Std/Fine` will appear on the LCD. Press **Resolution** and choose `Standard`, `Fine` or `Photo`, then re-enter the IFAX number. If you want to enter other numbers, go back to ❸.

Cancelling a broadcast in progress

While broadcasting you can cancel the fax currently being sent or the whole broadcast job.

1. Press **Menu**, **2**, **6**.
   The LCD will display the fax being dialled (for example, `#001 0123456789`) and the broadcast job number (for example, `Broadcast#001`):

```
26.Remaining Jobs
▲ #001 0123456789
▼ Broadcast#001
Select ▲▼ or OK
```

2. Press ▲ or ▼ to choose the job number you want to cancel.
   Press **OK**.
3. Press **1** to clear the job number or **2** to exit.
   If you chose to only cancel the fax currently being sent in ❷, the machine will ask you if you want to cancel the broadcast. Press **1** to clear the whole broadcast job or **2** to exit.
4. Press **Stop/Exit**.

Additional sending operations

Sending faxes using multiple settings

Before you send a fax, you can change any combination of these settings: contrast, resolution, overseas mode, delayed fax timer, polling transmission, real time transmission or cover page settings.

1. Make sure you are in Fax mode .
   After each setting is accepted, the LCD asks if you want to enter more settings:

```
22.Setup Send
  Next?
▲    1.Yes
▼    2.No
Select ▲▼ or OK
```

2. Do one of the following:
   - To choose more settings, press **1**. The LCD returns to the `Setup Send` menu so you can choose another setting.
   - If you have finished choosing settings, press **2** and go to the next step for sending your fax.

Electronic cover page (black & white only)

This feature will *not* work unless you have already programmed your Station ID. (See *the Quick Setup Guide*.)

You can automatically send a cover page with every fax. Your cover page includes your Station ID, a comment, and the name stored in the One-Touch or Speed-Dial memory.

By choosing `Next Fax:On` you can also display the number of pages on the cover page.

You can choose one of the following preset comments.

`1.Comment Off`

`2.Please Call`

`3.Urgent`

`4.Confidential`

Instead of using one of the preset comments, you can enter two personal messages of your own, up to 27 characters long. Use the chart on page 220 for help entering characters.

(See *Composing your own comments* on page 38.)

`5.`(User Defined)

`6.`(User Defined)

Note

You can send the cover page only for a black & white fax. If you press **Colour Start** to send a fax, the cover page will not be sent.

Composing your own comments

You can set up two comments of your own.

1. Make sure you are in Fax mode.
2. Press **Menu**, **2**, **2**, **8**.

```
22.Setup Send
  8.Coverpage Note
▲    5.
▼    6.
Select ▲▼ or OK
```

3. Press ▲ or ▼ to choose `5` or `6` to store your own comment.
   Press **OK**.
4. Enter your own comment using the dial pad.
   Press **OK**.

Use the chart on page 220 for help entering characters.

Send a cover page for the next fax

If you want to send a cover page only for the next fax, your machine will ask you to enter the number of pages you are sending so it can be printed on the cover page.

1. Make sure you are in Fax mode.
2. Load your document.
3. Press **Menu**, **2**, **2**, **7**.

```
22.Setup Send
  7.Coverpg Setup
▲    Next Fax:On
▼    Next Fax:Off
Select ▲▼ or OK
```

4. Press ▲ or ▼ to choose `Next Fax:On` (or `Next Fax:Off`).
   Press **OK**.
5. Press ▲ or ▼ to choose a comment.
   Press **OK**.

6 Enter two digits to show the number of pages you are sending.
Press **OK**.
For example, enter **0**, **2** for 2 pages or **0**, **0** to leave the number of pages blank.
If you make a mistake, press ◄ or **Clear/Back** to back up and re-enter the number of pages.

Send a cover page for all faxes

You can set the machine to send a cover page whenever you send a fax.

1 Make sure you are in Fax mode .

2 Press **Menu**, **2**, **2**, **7**.

```
22.Setup Send
  7.Coverpg Setup
▲    Next Fax:On
▼    Next Fax:Off
Select ▲▼ or OK
```

3 Press ▲ or ▼ to choose `On` (or `Off`).
Press **OK**.

4 Press ▲ or ▼ to choose a comment.
Press **OK**.

Using a printed cover page

If you want to use a printed cover page that you can write on, you can print the sample page and attach it to your fax.

1 Make sure you are in Fax mode .

2 Press **Menu**, **2**, **2**, **7**.

```
22.Setup Send
  7.Coverpg Setup
▲    Next Fax:On
▼    Next Fax:Off
Select ▲▼ or OK
```

3 Press ▲ or ▼ to choose `Print Sample`.
Press **OK**.

4 Press **Mono Start** or **Colour Start**.
Your machine will print a copy of your cover page.

5 Press **Stop/Exit**.

Contrast

For most documents the default setting of `Auto` will give the best results. It automatically chooses the suitable contrast for your document.

If your document is very light or dark, changing the contrast may improve the quality of the fax.

Use `Dark` to make the faxed document lighter.

Use `Light` to make the faxed document darker.

1 Make sure you are in Fax mode .

2 Load your document.

3 Press **Menu**, **2**, **2**, **1**.

```
22.Setup Send
  1.Contrast
▲    Auto
▼    Light
Select ▲▼ or OK
```

4 Press ▲ or ▼ to choose `Auto`, `Light` or `Dark`.
Press **OK**.

Note

Even if you choose `Light` or `Dark`, the machine will send the fax using the `Auto` setting if you choose `Photo` as the Fax Resolution.

Changing fax resolution

The quality of a fax can be improved by changing the fax resolution. Resolution can be changed for the next fax *or* for all faxes.

To change the fax resolution for the *next* fax

1. Make sure you are in Fax mode.
2. Load your document.
3. Press **Resolution**, then ▲ or ▼ to choose the resolution.
   Press **OK**.

To change the default fax resolution

1. Make sure you are in Fax mode.
2. Press **Menu**, **2**, **2**, **2**.

```
22.Setup Send
  2.Fax Resolution
▲    Standard
▼    Fine
Select ▲▼ or OK
```

3. Press ▲ or ▼ to choose the resolution you want.
   Press **OK**.

Note

You can choose four different resolution settings for black & white faxes and two for colour.

Monochrome	
Standard	Suitable for most typed documents.
Fine	Good for small print and transmits a little slower than Standard resolution.
S.Fine	Good for small print or artwork and transmits slower than Fine resolution.
Photo	Use when the document has varying shades of grey or is a photograph. This has the slowest transmission.

Colour	
Standard	Suitable for most typed documents.
Fine	Use when the document is a photograph. The transmission time is slower than Standard resolution.

If you choose S.Fine or Photo and then use the **Colour Start** key to send a fax, the machine will send the fax using the Fine setting.

Dual access (black & white only)

Your machine supports dual access, which lets you dial a number and begin scanning a fax into memory while you are already sending or receiving a fax.

The LCD will show the new job number. The number of pages you can scan into the memory will vary depending on the data that is printed on them.

Note

- Your machine normally uses dual access.
- If you get an `Out of Memory` message while scanning the first page of a fax, press **Stop/Exit** to cancel scanning. If you get an `Out of Memory` message while scanning a subsequent page, you can press **Mono Start** to send the pages scanned so far, or press **Stop/Exit** to cancel the operation.

Real time transmission

When you are sending a fax, the machine will scan the documents into the memory before sending. Then, as soon as the telephone line is free, the machine will start dialling and sending.

Sometimes, you may want to send an important document immediately, without waiting for memory transmission. You can set `Real Time TX` to `On` for all documents or `Next Fax:On` for the next fax only.

Sending in real time for all faxes

1. Make sure you are in Fax mode.
2. Press **Menu**, **2**, **2**, **5**.

```
22.Setup Send
  5.Real Time TX
▲    On
▼    Off
Select ▲▼ or OK
```

3. Press ▲ or ▼ to choose `On`. Press **OK**.

Sending in real time for the next fax only

1. Make sure you are in Fax mode.
2. Press **Menu**, **2**, **2**, **5**.

```
22.Setup Send
  5.Real Time TX
▲    On
▼    Off
Select ▲▼ or OK
```

3. Press ▲ or ▼ to choose `Next Fax:On`. Press **OK**.

Note

In Real Time Transmission, the automatic redial feature does not work when using the scanner glass.

Not sending in real time for the next fax only

1. Make sure you are in Fax mode.
2. Press **Menu**, **2**, **2**, **5**.

```
22.Setup Send
  5.Real Time TX
▲    On
▼    Off
Select ▲▼ or OK
```

3. Press ▲ or ▼ to choose `Next Fax:Off`. Press **OK**.

Note

- If the memory is full or you are sending a colour fax, the machine will send the document in real time (even if `Real Time TX` is set to `Off`).
- In Real Time Transmission, the automatic redial feature does not work when using the scanner glass.

Overseas mode

If you are having difficulty sending a fax overseas due to a bad connection, then turning on the overseas mode may help.

This is a temporary setting, and will only be active for your next fax.

1. Make sure you are in Fax mode .
2. Load your document.
3. Press **Menu**, **2**, **2**, **9**.

```
22.Setup Send
  9.Overseas Mode
▲    On
▼    Off
Select ▲▼ or OK
```

4. Press ▲ or ▼ to choose `On` (or `Off`).
   Press **OK**.

Delayed fax (black & white only)

You can store up to 50 faxes in the memory to be sent within a twenty four hour period.

1. Make sure you are in Fax mode .
2. Load your document.
3. Press **Menu**, **2**, **2**, **3**.

```
22.Setup Send
  3.Delayed Fax

  Set Time=00:00
Enter & OK Key
```

4. Enter the time you want the fax to be sent (in 24-hour format).
   (*For example, enter 19:45 for 7:45 PM.*)
   Press **OK**.

The number of pages you can scan into the memory depends on the amount of data printed on each page.

Delayed batch transmission (black & white only)

Before sending the delayed faxes, your machine will help you economize by sorting all the faxes in the memory by destination and scheduled time.

All delayed faxes that are scheduled to be sent at the same time to the same fax number will be sent as one fax to save transmission time.

1. Make sure you are in Fax mode .
2. Press **Menu**, **2**, **2**, **4**.

```
22.Setup Send
  4.Batch TX
▲    On
▼    Off
Select ▲▼ or OK
```

3. Press ▲ or ▼ to choose `On` (or `Off`).
   Press **OK**.
4. Press **Stop/Exit**.

Checking and cancelling waiting jobs

Check which jobs are still waiting in the memory to be sent. If there are no jobs, the LCD will show `No Jobs Waiting`. You can cancel a fax job that is stored and waiting in the memory.

1. Press **Menu**, **2**, **6**.

```
26.Remaining Jobs
▲ #001 12:34 BROTHER
  #002 15:30 BIE
▼ #003 17:30 ABCDEFG
Select ▲▼ or OK
```

   The number of jobs still to be sent will be displayed.

2. Do one of the following:
   - Press ▲ or ▼ to scroll though the waiting jobs, press **OK** to choose a job, and then press **1** to cancel it.
   - Press **2** to exit without cancelling.

3. When you have finished, press **Stop/Exit**.

Sending a fax manually

Manual transmission

Manual transmission lets you hear the dialling, ringing and fax-receiving tones while sending a fax.

1. Make sure you are in Fax mode .
2. Load your document.
3. Pick up the handset of an external telephone and listen for a dial tone.
4. Dial the fax number you want to call.
5. When you hear the fax tone, press **Mono Start** or **Colour Start**.
   - If you are using the scanner glass press **1** to send a fax.
6. If you picked up the hand set of an external phone, replace it.

Out of memory message

If you get an `Out of Memory` message while scanning the first page of a fax, press **Stop/Exit** to cancel the fax.

If you get an `Out of Memory` message while scanning a subsequent page, you will have the option to press **Mono Start** to send the pages scanned so far, or to press **Stop/Exit** to cancel the operation.

Note

If you get an `Out of Memory` message while faxing and you do not want to delete your stored faxes to clear the memory, you can send the fax in real time.
(See *Real time transmission* on page 41.)

6 Receiving a fax

Receive modes

You must choose a receive mode depending on the external devices and telephone services you have on your line. The diagrams below will help you choose the correct mode. (For more detailed information about the receive modes, see *Using receive modes* on page 45.)

Choosing the receive mode

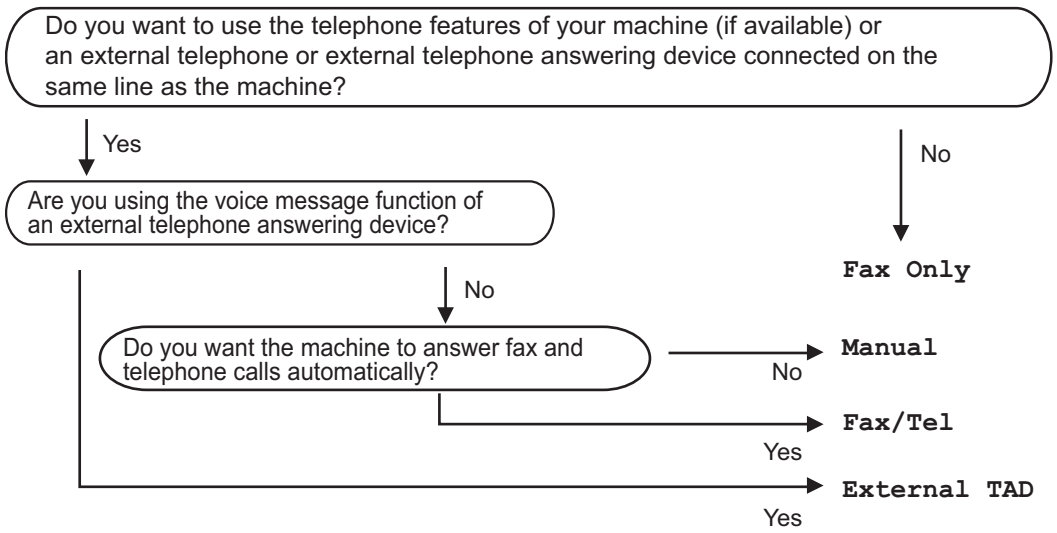

To set the receive mode follow the instructions below.

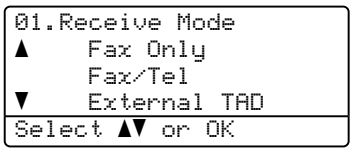

1. Press **Menu**, **0**, **1**.
2. Press ▲ or ▼ to choose the receive mode.
   Press **OK**.
3. Press **Stop/Exit**.

The LCD will display the current receive mode.

Using receive modes

Some receive modes answer automatically (`Fax Only` and `Fax/Tel`). You may want to change the ring delay before using these modes. (See *Ring delay* on page 46.)

Fax Only

`Fax Only` mode will automatically answer every call as a fax.

Fax/Tel

`Fax/Tel` mode helps you automatically manage incoming calls, by recognising whether they are fax or voice calls and dealing with them in one of the following ways:

- Faxes will be automatically received.
- Voice calls will start the F/T ring to tell you to pick up the line. The F/T ring is a fast double ring made by your machine.

(Also see *F/T ring time* on page 46 and *Ring delay* on page 46.)

Manual

`Manual` mode turns off all automatic answering functions unless you are using the BT Call sign [1] feature.

[1] BT Call Sign is for U.K. only.

To receive a fax in Manual mode lift the handset of the external telephone. When you hear fax tones (short repeating beeps), press **Mono Start** or **Colour Start**, and then press **2** to receive a fax. You can also use the Fax Detect feature to receive faxes by lifting a handset on the same line as the machine.

(Also see *Fax Detect* on page 47.)

External TAD

`External TAD` mode lets an external answering device manage your incoming calls. Incoming calls will be handled in one of the following ways:

- Faxes will be automatically received.
- Voice callers can record a message on the external TAD.

(For more information see *Connecting an external TAD* on page 52.)

Receive mode settings

Ring delay

The ring delay sets the number of times the machine rings before it answers in `Fax Only` and `Fax/Tel` modes.

If you have external or extension telephones on the same line as the machine or subscribe to the BT Call Sign [1] service, keep the maximum number of rings. (See *Operation from extension telephones* on page 53 and *Fax Detect* on page 47.)

[1] BT Call Sign is for U.K. only.

1. Make sure you are in Fax mode .
2. Press **Menu**, **2**, **1**, **1**.

```
21.Setup Receive
  1.Ring Delay
▲    02
▼    03
Select ▲▼ or OK
```

3. Press ▲ or ▼ to choose how many times the line rings before the machine answers.
   Press **OK**.
4. Press **Stop/Exit**.

F/T ring time

When somebody calls your machine, you and your caller will hear the normal telephone ring sound. The number of rings is set by the ring delay setting.

If the call is a fax, then your machine will receive it; however, if it is a voice call the machine will sound the F/T ring (a fast double-ring) for the time you have set in the F/T ring time setting. If you hear the F/T ring it means that you have a voice caller on the line.

Because the F/T ring is made by the machine, extension and external telephones will *not* ring; however, you can still answer the call on any telephone. (For more information see *Using remote codes* on page 55.)

1. Make sure you are in Fax mode .
2. Press **Menu**, **2**, **1**, **2**.

```
21.Setup Receive
  2.F/T Ring Time
▲    30 Secs
▼    40 Secs
Select ▲▼ or OK
```

3. Press ▲ or ▼ to choose how long the machine will ring to alert you that you have a voice call (20, 30, 40 or 70 seconds).
   Press **OK**.
4. Press **Stop/Exit**.

Fax Detect

Turning fax detect On allows the machine to receive fax calls automatically if you lift any handset on the same line as the machine.

When you see Receiving on the LCD or when you hear 'chirps' through the handset of an extension telephone connected to another telephone wall socket, just replace the handset and your machine will receive the fax.

If this feature is set to On, but your machine does not connect a fax call when you lift the handset of an extension or external telephone, press ✳**51** on the external or extension telephone. (See *Operation from extension telephones* on page 53.)

Note

- You need to turn the Remote Codes setting to on to use the Fax Receive Code ✳51. (See *Using remote codes* on page 55.)
- If you use a modem, or send faxes from a computer, on the same line and your machine intercepts them, set fax detect to Off.

1. Make sure you are in Fax mode.
2. Press **Menu**, **2**, **1**, **3**.

```
21.Setup Receive
  3.Fax Detect
▲    On
▼    Off
Select ▲▼ or OK
```

3. Press ▲ or ▼ to choose On or Off.
   Press **OK**.
4. Press **Stop/Exit**.

Setting the print density

You can adjust the print density to make your printed pages darker or lighter.

1. Make sure you are in Fax mode.
2. Press **Menu**, **2**, **1**, **7**.

```
21.Setup Receive
  7.Print Density
      -□□■□□+
Select ◀ ▶ & OK
```

3. Press ▶ to make the print darker.
   Or, press ◀ to make the print lighter.
   Press **OK**.
4. Press **Stop/Exit**.

Additional receiving operations

Printing a reduced incoming fax

If you choose On, the machine automatically reduces each page of an incoming fax to fit on one page of A4, Letter, Legal or Folio size paper.

The machine calculates the reduction ratio by using the page size of the fax and your Paper Size setting (**Menu**, **1**, **3**).

1. Make sure you are in Fax mode .
2. Press **Menu**, **2**, **1**, **5**.

```
21.Setup Receive
  5.Auto Reduction
▲    On
▼    Off
Select ▲▼ or OK
```

3. Press ▲ or ▼ to choose On (or Off). Press **OK**.
4. Press **Stop/Exit**.

Duplex (2-sided) printing for Fax mode

If you set Duplex to On for fax receive the machine will print received faxes on both sides of paper. You can use A4, Letter, Legal or Folio (8”x13”) size of paper for this function.

1. Make sure you are in Fax mode .
2. Press **Menu**, **2**, **1**, **0**.

```
21.Setup Receive
  0.Duplex
▲    On
▼    Off
Select ▲▼ or OK
```

3. Press ▲ or ▼ to choose On (or Off). Press **OK**.
4. Press **Stop/Exit**.

Note

When you turn Duplex on the auto reduction feature is also turned on.

Setting the fax receive stamp (black & white only)

You can set the machine to print the received date and time in the top centre of each received fax page.

1. Make sure you are in Fax mode .
2. Press **Menu**, **2**, **1**, **9**.

```
21.Setup Receive
  9.Fax Rx Stamp
▲    On
▼    Off
Select ▲▼ or OK
```

3. Press ▲ or ▼ to choose On (or Off). Press **OK**.
4. Press **Stop/Exit**.

Note

- The received time and date will not appear when using Internet Fax.
- Make sure you have set the current date and time in the machine.

Receiving faxes into memory (black & white only)

As soon as the paper tray becomes empty during fax reception, the screen will display `No Paper`, asking you to put paper in the paper tray. (See *Loading paper and envelopes* on page 17.) If you are unable to put paper in the paper tray the following will happen:

If `Memory Receive` is `On`:

The machine will carry on receiving the fax, with the remaining pages being stored in memory, if enough memory is available. Further incoming faxes will also be stored into memory until the memory is full. When the memory is full the machine will stop automatically answering calls. To print the faxes, put fresh paper in the tray.

If `Memory Receive` is `Off`:

The machine will carry on receiving the fax, with the remaining pages being stored in memory, if enough memory is available. The machine will then stop automatically answering calls until fresh paper is put in the paper tray. To print the last fax you received, put fresh paper in the tray.

1. Make sure you are in Fax mode .
2. Press **Menu**, **2**, **1**, **6**.
3. Press ▲ or ▼ to choose `On` or `Off`.
   Press **OK**.
4. Press **Stop/Exit**.

Printing a fax from the memory

If you are using the Fax Storage feature (**Menu**, **2**, **5**, **1**), you can still print a fax from the memory when you are at your machine. See *Fax storage* on page 65.

1. Press **Menu**, **2**, **5**, **3**.

   ```
   25.Remote Fax Opt
     3.Print Document

   Press Start
   ```

2. Press **Mono Start** or **Colour Start**.
3. Press **Stop/Exit**.

6

7 Telephone and external devices

Telephone line services

Setting the telephone line type

If you are connecting the machine to a line that features a PBX or ISDN to send and receive faxes, it is necessary to change the Telephone Line Type accordingly by completing the following steps. If you are using a line that features a PBX, you can also set your machine to gain access to an outside line always or not.

1. Press **Menu**, **0**, **6**.

```
06.Phone Line Set
▲    Normal
     ISDN
▼    PBX
Select ▲▼ or OK
```

2. Press ▲ or ▼ to choose `PBX`, `ISDN` (or `Normal`).
   Press **OK**.
   If you choose `ISDN` or `Normal`, press **OK** and go to ❻. If you choose `PBX`, press **OK** and go to ❸.

3. Press ▲ or ▼ to choose `On` or `Always`.
   Press **OK**.

4. Choose `1.Change` or `2.Exit`.
   If you choose `1.Change`, go to ❺.
   If you choose `2.Exit`, go to ❻.

5. Enter the prefix number (up to 5 digits) on the dial pad.
   Press **OK**.

Note

- You can use the numbers 0 to 9, #, ✳ and !.

  (Press **Tel/R** to display “!”.)
- If you choose `On`, pressing **Tel/R** (the screen displays”!”) will let you access an outside line.
- If you choose `Always`, you can access an outside line without pressing **Tel/R**.

6. Press **Stop/Exit**.

PBX and TRANSFER

The machine is initially set to `Normal`, which lets the machine connect to a standard PSTN (Public Switched Telephone Network) line. However, many offices use a central telephone system or Private Branch Exchange (PBX). Your machine can be connected to most types of PBX. The machine’s recall feature supports timed break recall only (TBR). TBR will work with most PBX systems allowing you to gain access to an outside line, or transfer calls to another extension. The feature works when **Tel/R** is pressed.

Note

You can program a **Tel/R** key press as part of a number stored in a One-Touch or Speed-Dial location. When programming the One-Touch or Speed-Dial number (**Menu**, **2**, **3**, **1** or **2**, **3**, **2**) press **Tel/R** first (the screen displays "!") then enter the telephone number. If you do this, you do not need to press **Tel/R** each time before you dial using a One-Touch or Speed-Dial location. (*Storing one-touch dial numbers* on page 59 or *Storing speed-dial numbers* on page 60.) However, if PBX is not chosen in the Telephone Line Type setting, you cannot use the One-Touch or Speed-Dial number the **Tel/R** press is programmed into.

BT call sign (U.K. only)

The BT Call Sign subscriber service is a way to have a separate number for your machine, it allows you to have at least two separate telephone numbers on one telephone line. Each telephone number has its own distinctive ringing pattern.

You can set up your machine so that it only responds to the second number.

When you set the BT Call Sign feature to ON, the receive mode is set to `Manual` automatically. `Manual` mode will not respond to incoming telephone calls, since the number you use for telephone calls will use the normal ring pattern. If you turn the feature off, your receive mode will remain on `Manual`.

To enable the machine to work with BT Call Sign

This feature will only work with your external telephone.

1. Press **Menu**, **2**, **0**, **2**. The screen displays the current setting.

```
20.Miscellaneous
  2.BT Call Sign
▲    Off
▼    Set
Select ▲▼ or OK
```

2. Press ▲ or ▼ to choose `Set` (or `Off`). Press **OK**.

3. Press **Stop/Exit**.

Connecting an external TAD

You can connect an external Telephone Answering Device (TAD) to the same line as your machine. When the TAD answers a call, your machine will “listen” for the CNG (fax calling) tones sent by a sending fax machine. If it hears them it will take over the call and receive the fax. If it does not hear them, it will let your TAD take a voice message and the display will show `Telephone`.

The external TAD must answer within four rings (we recommend you set it to two rings). This is because your machine cannot hear the CNG tones until the external TAD has picked up the call. The sending machine will send CNG tones for only eight to ten seconds longer. We do not recommend using the toll saver feature on your external TAD if it needs more than four rings to activate it.

Note

If you have problems receiving faxes, reduce the ring delay setting on your external TAD.

Connections

The external TAD must be connected as shown in the illustration below.

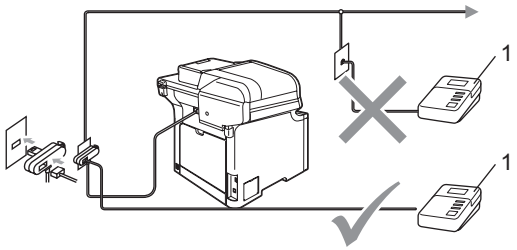

1 TAD

1. Set your external TAD to one or two rings. (The machine’s Ring Delay setting does not apply.)
2. Record the outgoing message on your external TAD.
3. Set the TAD to answer calls.
4. Set the Receive Mode to `External TAD`. (See *Choosing the receive mode* on page 44.)

Recording an outgoing message (OGM)

1. Record 5 seconds of silence at the beginning of your message. This allows your machine time to listen for fax tones.
2. Limit your speaking to 20 seconds.

Note

We recommend beginning your OGM with an initial 5 second silence because the machine cannot hear fax tones over a loud voice. You may try leaving out this pause, but if your machine has trouble receiving, then you should re-record the OGM to include it.

Multi-line connections (PBX)

We suggest you ask the company who installed your PBX to connect your machine. If you have a multi line system we suggest you ask the installer to connect the unit to the last line on the system. This prevents the machine being activated each time the system receives telephone calls. If all incoming calls will be answered by a switchboard operator we recommend that you set the Receive Mode to `Manual`.

We cannot guarantee that your machine will operate properly under all circumstances when connected to a PBX. Any difficulties with sending or receiving faxes should be reported first to the company who handles your PBX.

External and extension telephones

Note

You need to turn the Remote Codes setting to on to use the Fax Receive Code ✳51 and Telephone Answer Code #51. (See *Using remote codes* on page 55.)

Operation from extension telephones

If you answer a fax call on an extension telephone, or an external telephone that is correctly connected to the machine into the correct socket on the machine, you can make your machine take the call by using the Fax Receive Code. When you press the Fax Receive Code ✳**51** the machine starts to receive the fax.

If you answer a call and no one is on the line:

You should assume that you're receiving a manual fax.

Press ✳**51** and wait for the chirp or until the machine's LCD shows `Receiving`, and then hang up.

Note

You can also use the Fax Detect feature to make your machine tactically take the call. (See *Fax Detect* on page 47.)

For Fax/Tel mode only

When the machine is in Fax/Tel mode, it will use the F/T Ring Time (pseudo/double-ringing) to alert you to pick up a voice call.

Lift the external telephone's handset, and then press **Tel/R** to answer.

If you're at an extension telephone, you will need to lift the handset during the F/T Ring Time and then press **#51** between the pseudo/double rings. If no one is on the line, or if someone wants to send you a fax, send the call back to the machine by pressing ✳**51**.

Connecting an external or extension telephone

You can connect a separate telephone directly to your machine as shown in the diagram below.

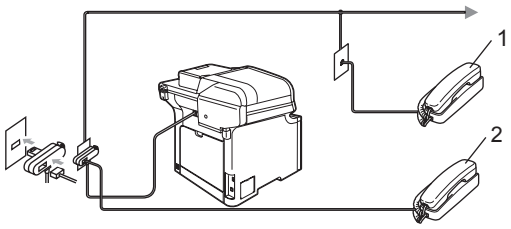

1 Extension telephone

2 External telephone

When you are using an external telephone, the LCD shows `Telephone`.

Using extension telephones (U.K. only)

Your premises may already be wired with parallel extension telephones (those connected to sockets in other rooms in the building), or perhaps you intend to add extension telephones to your line. While the simplest arrangement is a parallel connection, there are some reasons why this arrangement may cause problems.

The most common problem, is someone picking up an extension telephone while the machine is trying to send a fax.

Such problems can easily be eliminated, if you arrange modification of your extension wiring circuit, such that extension devices are connected "downstream" of your machine, in a master/slave configuration (see *figure 2* on page 55). In such a configuration, this machine can always detect whether a telephone is in use, so it will not attempt to seize the line during that time. This is known as "telephone off-hook detection".

The inadvisable configuration is shown in *figure 1*, and the recommended master/slave configuration is shown in *figure 2*.

This new connection configuration can be arranged by contacting BT, Kingston upon Hull Telecommunications, your PBX maintainer or a qualified telephone installation company as appropriate. Simply explained, the extension telephone circuit should be terminated on a normal modular plug (BT 431A style), which in turn should be inserted into the modular socket of the white "T"-shaped connector provided as part of the line cord assembly.

Figure 1:

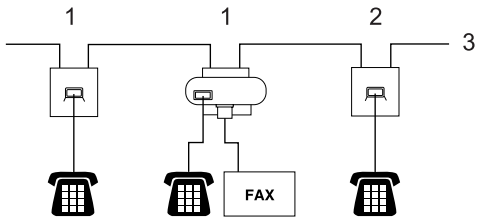

1 Extension socket

2 Master socket

3 Incoming line

Figure 2: Recommended connection of extension sockets

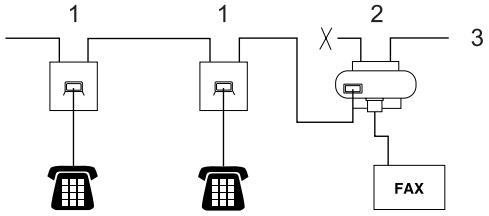

1 Extension socket

2 Master socket

3 Incoming line

These telephones are now connected as *external devices* as shown on page 54, because they are connected to the fax machine via the T-connector.

Using a non-Brother cordless external handset

If your non-Brother cordless telephone is connected to the telephone line cord (see page 54) and you typically carry the cordless handset elsewhere, it is easier to answer calls during the Ring Delay.

If you let the machine answer first, you will have to go to the machine so you can press **Tel/R** to transfer the call to the cordless handset.

Using remote codes

Fax Receive Code

If you answer a fax call on an extension or external telephone, you can tell your machine to receive it by pressing the fax receive code ✳**51**. Wait for the chirping sounds then replace the handset. (See *Fax Detect* on page 47.)

Telephone Answer Code

If you receive a voice call and the machine is in F/T mode, it will start to sound the F/T (double-ring) after the initial ring delay. If you pick up the call on an extension telephone you can turn the F/T ring off by pressing **#51** (make sure you press this *between* the rings).

Turning on the remote codes

You need to turn the Remote Codes setting to on to use the Fax Receive Code and Telephone Answer Code.

1. Make sure you are in Fax mode.
2. Press **Menu**, **2**, **1**, **4**.

```
21.Setup Receive
  4.Remote Codes
▲    On
▼    Off
Select ▲▼ or OK
```

3. Press ▲ or ▼ to choose `On`.
   Press **OK**.
4. If you don't want to change the Fax Receive Code, press **OK**.
5. If you don't want to change the Telephone Answer Code, press **OK**.
6. Press **Stop/Exit**.

Changing the remote codes

The preset fax receive code is ✳**51**. The preset telephone answer code is **#51**. If you are always disconnected when accessing your external TAD, try changing the three-digit remote codes, for example **###** and **555**.

1. Make sure you are in Fax mode .

2. Press **Menu**, **2**, **1**, **4**.

```
21.Setup Receive
  4.Remote Codes
▲    On
▼    Off
Select ▲▼ or OK
```

3. Press ▲ or ▼ to choose `On` or `Off`.
   Press **OK**.

4. If you chose `On` in ❸, enter the new Fax Receive Code.
   Press **OK**.

5. Enter the new Telephone Answer Code.
   Press **OK**.

6. Press **Stop/Exit**.

8 Dialling and storing numbers

How to dial

You can dial in any of the following ways.

Manual dialling

Use the dial pad to enter all the digits of the telephone or fax number.

One-touch dialling

Press the One-Touch key that stores the number you want to call. (See *Storing one-touch dial numbers* on page 59.)

To dial One-Touch numbers 21 to 40, hold down **Shift** as you press the One-Touch key.

Speed-dialling

Hold down **Shift** as you press **Search/Speed Dial**, and enter the three-digit Speed-Dial number. (See *Storing speed-dial numbers* on page 60.)

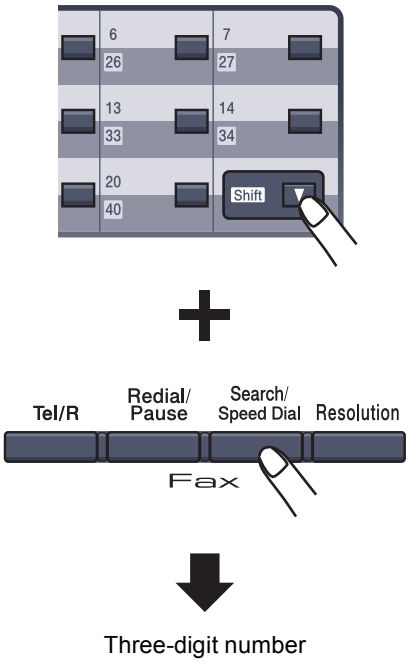

Note

If the LCD shows `Not Registered` when you enter a One-Touch or a Speed-Dial number, it means that a number is not stored there.

Search

You can search alphabetically for names you have stored in the One-Touch and Speed-Dial memories. (See *Storing one-touch dial numbers* on page 59 and *Storing speed-dial numbers* on page 60.)

1. Press **Search/Speed Dial**.
2. Press the dial pad key for the first letter of the name. Press **OK**.
   (Use the chart on *Entering text* on page 220 to help you enter letters.)
3. Press ▲ or ▼ to scroll until you find the name you are looking for.
   Press **OK**.

Note

You can press **Resolution** to change the displayed resolution.

4. Press **Mono Start** or **Colour Start**.

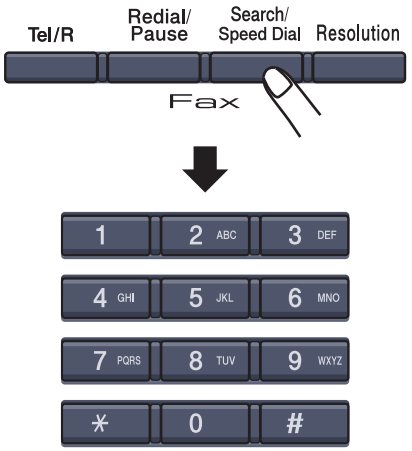

Note

- If you do not enter a letter and press **OK** in ❷, all registered names will appear. Press ▲ or ▼ to scroll until you find the name you are looking for.
- If the LCD shows `No Contact Found` when you enter the first letter of the name, it means that a name for the letter is not stored.

LDAP Search

If the machine is connected to your LDAP server, you can search for information such as fax numbers and E-mail addresses from your server. (For details about how to set up LDAP see *the Network User's Guide on the CD-ROM*.)

Fax redial

If you are sending a fax automatically and the line is busy, the machine will automatically redial up to three times at five minute intervals.

If you are sending a fax manually and the line is busy, press **Redial/Pause**, wait for the other fax machine to answer, and then press **Mono Start** or **Colour Start** to try again. If you want to make a second call to the last number dialled, you can save time by pressing **Redial/Pause** and **Mono Start** or **Colour Start**.

Redial/Pause only works if you dialled from the control panel.

Storing numbers

You can set up your machine to do the following types of easy dialling: One-Touch, Speed-Dial and Groups for Broadcasting faxes. You can also specify the default resolution for each One-Touch and Speed-Dial number. When you dial a quick-dial number, the LCD shows the name, if you stored it, or the number. A scan profile can also be stored along with the fax number or E-mail address.

If you lose electrical power, the quick-dial numbers stored in the memory will not be lost.

A scan profile is the resolution and other scan settings that you choose when you store a number. For example, you will be asked to select Standard, Fine, S.Fine or Photo if you have selected the Fax/Tel option. Or, you will be asked to select `B/W200dpi`, `B/W200x100`, `Color150dpi`, `Color300dpi` or `Color600dpi` if you selected the E-Mail option.

Storing a pause

Press **Redial/Pause** to insert a 2.8-second pause between numbers. You can press **Redial/Pause** as many times as needed to increase the length of the pause.

Storing one-touch dial numbers

Your machine has 20 One-Touch keys where you can store 40 fax or telephone numbers, E-mail addresses for automatic dialling. To access numbers 21 to 40, hold down **Shift** as you press the One-Touch key.

1. Press **Menu**, **2**, **3**, **1**.

```
23.Set Quick-Dial
  1.One-Touch Dial

  One-Touch:
Select One-Touch
```

2. Press the One-Touch key where you want to store a number.

3. Press ▲ or ▼ to select `Fax/Tel`, `E-Mail` or `IFAX`.
   Press **OK**.

4. Choose one of the option below:

   - Enter the number (up to 20 characters). If you selected `Fax/Tel`.

     Press **OK**.

   - Enter the E-mail address (up to 60 characters) if you selected `E-Mail` or `IFAX`. Use the chart on *Entering text* on page 220 to help you enter letters.

     Press **OK**.

Note

If you selected `E-Mail` and save the E-mail address, you can only use the E-mail address when you are in Scan mode. If you selected `IFAX` and save the E-mail address, you can only use the E-mail address when you are in Fax mode.

5 Choose one of the options below:

- Enter the name using the dial pad (up to 15 characters).
  Press **OK**.
- Press **OK** to store the number or E-mail address without a name.

6 If you want to save a fax/scan resolution along with the number, choose one of the options below:

- If you selected `Fax/Tel` in ❸, press ▲ or ▼ to select `Std`, `Fine`, `S.Fine` or `Photo`.
  Press **OK** and then go to ❽.
- If you selected `E-Mail` in ❸, press ▲ or ▼ to select `B/W200dpi`, `B/W200x100`, `Color150dpi`, `Color300dpi` or `Color600dpi`.
  Press **OK** and then go to ❼.
- If you selected `IFAX` in ❸, press ▲ or ▼ to select `Std`, `Fine` or `Photo`.
  Press **OK** and then go to ❽.
- Press **OK** if you don't want to change the default resolution. Go to ❽.

7 Choose one of the option below:
If you selected `B/W200x100` or `B/W200dpi` in ❻, select the file format (TIFF or PDF) that will be used to send to your PC. If you selected `Color150dpi`, `Color300dpi` or `Color600dpi` in ❻, select the file format (PDF or JPEG) that will be used to send your PC.
Press **OK**.

8 Choose one of the option below:

- To store another One-Touch number go to ❷.
- To finish storing One-Touch numbers press **Stop/Exit**.

Note

When you do a broadcast and you have saved a scan profile along with the number or E-mail address, the scan profile of the One-Touch, Speed-Dial or Group number you choose first will be applied to the broadcast.

Storing speed-dial numbers

You can store your frequently used numbers as Speed-Dial numbers, so that when you dial you will only have to press a few keys (hold down **Shift** as you press **Search/Speed Dial**, the three-digit number, and **Mono Start** or **Colour Start**). The machine can store 300 Speed-Dial numbers (001 - 300).

1 Press **Menu**, **2**, **3**, **2**.

```
23.Set Quick-Dial
  2.Speed-Dial

  Speed-Dial? #
Enter & OK Key
```

2 Use the dial pad to enter a three-digit Speed-Dial location number (001 - 300).
Press **OK**.

3 Press ▲ or ▼ to select `Fax/Tel`, `E-Mail` or `IFAX`.
Press **OK**.

4 Choose one of the options below:

- Enter the number (up to 20 characters) when you select `Fax/Tel`.
  Press **OK**.
- Enter the E-mail address (up to 60 characters) if you selected `E-Mail` or `IFAX`. Use the chart on *Entering text* on page 220 to help you enter letters.
  Press **OK**.

Note

If you selected `E-Mail` and save the E-mail address, you can only use the E-mail address when you are in Scan mode. If you selected `IFAX` and save the E-mail address, you can only use the E-mail address when you are in Fax mode.

5 Choose one of the options below:

- Enter the name using the dial pad (up to 15 characters).

  Press **OK**.

- Press **OK** to store the number or E-mail address without a name.

6 If you want to save a fax/scan resolution along with the number, choose one of the options below:

- If you selected `Fax/Tel` in ❸, press ▲ or ▼ to select `Std`, `Fine`, `S.Fine` or `Photo`.

  Press **OK** and then go to ❽.

- If you selected `E-Mail` in ❸, press ▲ or ▼ to select `B/W200x100`, `B/W200dpi`, `Color150dpi`, `Color300dpi` or `Color600dpi`.
  Press **OK** and then go to ❼.

- If you selected `IFAX` in ❸, press ▲ or ▼ to select `Std`, `Fine` or `Photo`.
  Press **OK** and then go to ❽.

- Press **OK** if you don't want to change the default resolution. Go to ❽.

7 If you selected Black & White in ❻, select the file format (TIFF or PDF) that will be used to send to your PC. If you selected Colour in ❻, select the file format (PDF or JPEG) that will be used to send your PC.
Press **OK**.

8 Choose one of the options below:

- To store another Speed-Dial number go to ❷.
- To finish storing Speed-Dial numbers press **Stop/Exit**.

Note

When you do a broadcast and you have saved a scan profile along with the number or E-mail address, the scan profile of the One-Touch, Speed-Dial or Group number you chose first will be applied to the broadcast.

Changing one-touch and speed-dial numbers

If you try to store a One-Touch or Speed-Dial number over an existing number, the LCD will show the name or number already stored there.

1 Do one of the following:

- To change the stored number, press **1**.
- To exit without making a change, press **2**.

```
23.Set Quick-Dial
  #005:MIKE
▲    1.Change
▼    2.Exit
Select ▲▼ or OK
```

2 Press ▲ or ▼ to select `Fax/Tel`, `E-Mail` or `IFAX`.
Press **OK**.

3 Enter a new number or character.
Press ◀ or ▶ to position the cursor under the character you want to change, and then press **Clear/Back** to delete it.
Repeat for each character you want to delete.
Repeat this step to change the name.

4 Follow the directions beginning in ❻ in Storing one-touch dial numbers and Storing Speed-Dial numbers.
(See *Storing one-touch dial numbers* on page 59 and *Storing speed-dial numbers* on page 60.)

8

Setting up groups for broadcasting

If you often want to send the same fax message to many fax numbers you can set up a group.

Groups are stored on a One-Touch key or a Speed-Dial number. Each group uses up a One-Touch key or a Speed-Dial location. You can then send the fax message to all the numbers stored in a group just by pressing a One-Touch key or entering a Speed-Dial number, and then pressing **Mono Start**.

Before you can add numbers to a group, you need to store them as One-Touch or Speed-Dial numbers. You can have up to 20 small groups, or you can assign up to 339 numbers to one large group.

1. Press **Menu**, **2**, **3**, **3**.

```
23.Set Quick-Dial
  3.Setup Groups

  Group Dial:
Press Speed Dial
```

2. Choose an empty location where you want to store the group in one of the following ways:
   - Press a One-Touch key.
   - Hold down **Shift** as you press **Search/Speed Dial** and then enter the three-digit Speed-Dial location.

     Press **OK**.

3. Use the dial pad to enter a group number (01 to 20).
   Press **OK**.

4. Press ▲ or ▼ to select `Fax/IFAX` or `E-Mail`.
   Press **OK**.

5. To add One-Touch or Speed-Dial numbers follow the instructions below:
   - For One-Touch numbers, press the One-Touch keys one after the other.
   - For Speed-Dial numbers, hold down **Shift** as you press **Search/Speed Dial**, and then enter the three-digit Speed-Dial location.

   The LCD will display your chosen One-Touch numbers with a ✳ and Speed-Dial numbers with a # (for example ✳006, #009).

6. Press **OK** when you have finished adding numbers.

7. Do one of the following:
   - Enter the name using the dial pad (up to 15 characters). Use the chart on *Entering text* on page 220 to help you enter letters.

     Press **OK**.
   - Press **OK** to store the group without a name.

8. You can save a fax/scan resolution along with the number. Do one of the following:
   - If you selected `Fax/IFAX` in ❹, press ▲ or ▼ to select `Std`, `Fine`, `S.Fine` or `Photo`.
     Press **OK** and then go to ❿.
   - If you selected `E-Mail` in ❹, press ▲ or ▼ to select `B/W200x100`, `B/W200dpi`, `Color150dpi`, `Color300dpi` or `Color600dpi`.
     Press **OK** and then go to ❾.
   - Press **OK** if you don't want to change the default resolution. Go to ❿.

Note

If you have selected `Fax/IFAX` in ❹ and added One-Touch or Speed-Dial numbers that are stored as 'IFAX', you cannot select `S.Fine`.

9 If you selected B/W200dpi or B/W200x100 in ❽, select the file format (TIFF or PDF) that will be used to send to your PC. If you selected Color150dpi, Color300dpi or Color600dpi in ❽, select the file format (PDF or JPEG) that will be used to send your PC. Press **OK**.

10 Do one of the following:

- To store another group for broadcasting. Go to ❷.
- To finish storing groups for broadcasting, press **Stop/Exit.**

Note

Fax Broadcasting is for black & white only.

Combining quick-dial numbers

You can combine more than one Quick-Dial number when you dial. This feature may be useful if you need to dial an access code for a cheaper rate from another long distance carrier.

For example, you might have stored ‘555’ on Speed-Dial #003 and ‘7000’ on Speed-Dial #002. You can use them both to dial ‘555-7000’ if you press the following keys:

Hold down **Shift** as you press **Search/Speed Dial**, **003**. Hold down **Shift** as you press **Search/Speed Dial**, **002** and **Mono Start** or **Colour Start**.

Numbers can be added manually by entering them on the dial pad:

Hold down **Shift** as you press **Search/Speed Dial**, **003**, **7001** (on the dial pad), and **Mono Start** or **Colour Start**.

This would dial ‘555-7001’. You can also add a pause by pressing the **Redial/Pause** key.

Tone or pulse

If you have a Pulse dialling service, but need to send Tone signals (for example, for telephone banking), follow the instructions below. If you have a Touch Tone service, you will not need this feature to send tone signals.

1 Lift the handset of the external telephone, and press **Tel/R**.

2 Press **#** on the machine’s control panel. Any digits dialled after this will send tone signals.
When you hang up, the machine will return to the Pulse dialling service.

9 Remote fax options (black & white only)

Remote Fax options ARE NOT available for colour fax.

Remote fax options let you receive faxes while you are away from the machine.

You can use *only one* remote fax option at a time.

Fax forwarding

The fax forwarding feature lets you automatically forward your received faxes to another machine.

1. Press **Menu**, **2**, **5**, **1**.

```
25.Remote Fax Opt
  1.Forward/Store
▲    Off
▼    Fax Forward
Select ▲▼ or OK
```

2. Press ▲ or ▼ to choose `Fax Forward`. Press **OK**.
   The LCD will ask you to enter the fax number you want your faxes to be forwarded to.

3. Enter the forwarding number (up to 20 digits), using a One-Touch key or holding down **Shift** as you press **Search/Speed Dial** and the three-digit location.

Note

- If you store a group on a One-Touch key or a Speed Dial location, the faxes will be forward to several fax numbers.
- You can also enter an E-mail address if your machine has been configured for the Internet Fax feature. (For details about Internet Fax, see *the Network User's Guide on the CD-ROM*. For more information about Fax Forward to E-mail, see the Brother Solutions Center at http://solutions.brother.com)

4. Press ▲ or ▼ to choose `On` or `Off`.

```
25.Remote Fax Opt
  Backup Print
▲    Off
▼    On
Select ▲▼ or OK
```

   Press **OK**.

5. Press **Stop/Exit**.

Note

If you choose Backup Print On, the machine will also print the fax at your machine so you will have a copy. This is a safety feature in case if there is a power failure before the fax is forwarded or a problem at the receiving machine. The machine can store faxes to up to 60 hours if there is a power failure. The faxes stored in the machine's memory will be deleted.

Fax storage

The fax storage feature lets you store your received faxes in the machine's memory. You can retrieve stored fax messages from a fax machine at another location using the remote retrieval commands, see *Retrieving fax messages* on page 68. Your machine will automatically print a copy of the stored fax.

1. Press **Menu**, **2**, **5**, **1**.

```
25.Remote Fax Opt
  1.Forward/Store
▲    Off
▼    Fax Forward
Select ▲▼ or OK
```

2. Press ▲ or ▼ to choose `Fax Storage`. Press **OK**.

3. Press **Stop/Exit**.

Note

If Fax Storage is turned on your machine cannot receive a colour fax unless the sending machine converts it to black & white.

PC fax receive

The PC fax receive feature lets you automatically send your received faxes to your PC. You can then use your PC to view and store these faxes. If your PC is off when faxes are received, your machine will store them in memory until your PC is turned on again. If you choose Backup Print On, the machine will also print the fax.

For PC fax receive to work you must be connected to a PC that has the MFL-Pro Suite software installed. (See *PC-FAX receiving in Chapter 6 in the Software User's Guide on the CD-ROM*.)

1. Press **Menu**, **2**, **5**, **1**.

```
25.Remote Fax Opt
  1.Forward/Store
▲    Off
▼    Fax Forward
Select ▲▼ or OK
```

2. Press ▲ or ▼ to choose `PC Fax Receive`. Press **OK**.

3. Press ▲ or ▼ to choose `<USB>` or your computer name if the machine is connected to a network.

```
25.Remote Fax Opt
  1.Forward/Store
▲    <USB>
▼    ABC012
Select ▲▼ or OK
```

Press **OK**.

4. Press ▲ or ▼ to choose `On` or `Off`.

```
25.Remote Fax Opt
   Backup Print
▲    Off
▼    On
Select ▲▼ or OK
```

Press **OK**.

5. Press **Stop/Exit**.

Note

If your machine has a problem and is unable to print faxes in memory, you can use this setting to transfer your faxes to a PC. (For details, see *Error and maintenance messages* on page 131.)
If you choose Backup Print On, the machine will also print the faxes at your machine so you will have a copy. This is a safety feature in case there is a power failure before the faxes are forwarded or a problem at the receiving machine. The machine can store faxes up to 60 hours if there is a power failure.

Changing the destination PC

1. Press **Menu**, **2**, **5**, **1**.

```
25.Remote Fax Opt
  1.Forward/Store
▲    Off
▼    Fax Forward
Select ▲▼ or OK
```

2. Press ▲ or ▼ to choose `PC Fax Receive`.
Press **OK**.

3. Press **1** to choose `Change`.

4. Press ▲ or ▼ to choose `<USB>` or the PC you want to receive on the Network.
Press **OK**.

5. Press ▲ or ▼ to choose `On` or `Off`.

```
25.Remote Fax Opt
   Backup Print
▲    Off
▼    On
Select ▲▼ or OK
```

Press **OK**.

6. Press **Stop/Exit**.

Changing remote fax options

If received faxes are left in your machine's memory when you change the remote fax option to Off, the LCD will ask you the following message:

```
25.Remote Fax Opt
  Erase All Doc?
▲    1.Yes
▼    2.No
Select ▲▼ or OK
```

or

```
25.Remote Fax Opt
  Print All Fax?
▲    1.Yes
▼    2.No
Select ▲▼ or OK
```

- If you press **1**, faxes in the memory will be erased or printed before the setting changes. If a backup copy has already been printed it will not be printed again.
- If you press **2**, faxes in the memory will not be erased or printed and the setting will be unchanged.

If received faxes are left in the machine's memory when you change to `PC Fax Receive` from another remote fax option (`Fax Forward` or `Fax Storage`), the LCD will ask you the following message:

```
25.Remote Fax Opt
  Send Fax to PC?
▲    1.Yes
▼    2.No
Select ▲▼ or OK
```

- If you press **1**, faxes in the memory will be sent to your PC before the setting changes. Faxes in the memory will be sent to your PC when the PC Fax Receive icon is active on your PC. (See the *Software User's Guide on the CD-ROM*.)
- If you press **2**, faxes in the memory will not be erased or transferred to your PC and the setting will be unchanged.

The LCD will ask you the following message:

```
25.Remote Fax Opt
   Backup Print
▲    Off
▼    On
Select ▲▼ or OK
```

Press ▲ or ▼ to choose `On` or `Off`.

Press **OK**. Press **Stop/Exit**.

Note

If you choose Backup Print On, the machine will also print the fax at your machine so you will have a copy. This is a safety feature in case there is a power failure before the fax is forwarded or a problem at the receiving machine. The machine can store faxes up to 60 hours if there is a power failure. The faxes stored in the machine's memory will be deleted.

Turning off remote fax options

1. Press **Menu**, **2**, **5**, **1**.

```
25.Remote Fax Opt
  1.Forward/Store
▲    Off
▼    Fax Forward
Select ▲▼ or OK
```

2. Press ▲ or ▼ to choose `Off`.
Press **OK**.

Note

The LCD will give you options if there are received faxes still in your machine's memory. (See *Changing remote fax options* on page 66.)

3. Press **Stop/Exit**.

Remote retrieval

The remote retrieval feature lets you retrieve your stored fax messages when you are not at the machine. You can call your machine from any touch tone telephone or fax machine, then use the Remote Access Code to retrieve your messages.

Setting a remote access code

The remote access code lets you access the remote retrieval features when you are away from your machine. Before you use the remote access and retrieval features, you have to set up your own code. The default code is an inactive code: – – –✳.

1. Press **Menu**, **2**, **5**, **2**.

```
25.Remote Fax Opt
  2.Remote Access

  Access Code:---✳
Enter & OK Key
```

2. Enter a three-digit code using numbers **0** – **9**, ✳ or **#**.
Press **OK**.

3. Press **Stop/Exit**.

Note

DO NOT use the same code used for your Fax Receive Code (✳**51**) or Telephone Answer Code (**#51**). (See *Changing the remote codes* on page 56.)

You can change your code at any time. If you want to make your code inactive, press **Clear/Back** and **OK** in ❷ to restore the inactive setting – – –✳.

Using your remote access code

1. Dial your fax number from a telephone or another fax machine using touch tone.
2. When your machine answers, immediately enter your remote access code (3 digits followed by ✳).
3. The machine signals if it has received messages:
   - *No beeps*

     No messages received.
   - *1 long beep*

     Fax message received.
4. The machine gives two short beeps to tell you to enter a command. The machine will hang up if you wait longer than 30 seconds before entering a command. If you enter an invalid command the machine will beep three times.
5. Press **9 0** to reset the machine when you have finished.
6. Hang up.

Note

If your machine is set to `Manual` mode, you can still access the remote retrieval features. Dial the fax number as normal and let the machine ring. After 2 minutes you will hear a long beep to tell you to enter the remote access code. You then have 30 seconds to enter the code.

Retrieving fax messages

1. Dial your number from a telephone or another fax machine using touch tone.
2. When your machine answers, immediately enter your remote access code (3 digits followed by ✳). If you hear one long beep, you have messages.
3. When you hear two short beeps, use the dial pad to press **9 6 2**.
4. Wait for a long beep, and then use the dial pad to enter the number of the remote fax machine where you want your fax messages sent to, followed by **##** (up to 20 digits).
5. Hang up after you hear your machine beep. Your machine will call the other machine, which will then print your fax messages.

Note

You can insert a pause in a fax number by using the # key.

Changing the fax forwarding number

You can change the default setting of your fax forwarding number from another telephone or fax machine using touch tone.

1. Dial your fax number from a telephone or another telephone or fax machine using touch tone.
2. When your machine answers, enter your remote access code (3 digits followed by ✳). If you hear one long beep, you have messages.
3. When you hear two short beeps, use the dial pad to press **9 5 4**.
4. Wait for a long beep, and then use the dial pad to enter the new number of the remote fax machine where you want your fax messages forwarded followed by **##** (up to 20 digits).
5. Press **9 0** to reset the machine when you have finished.
6. Hang up after you hear your machine beep.

Note

You can insert a pause in a fax number by using the # key.

Remote fax commands

Follow the commands below to access features when you are away from the machine. When you call the machine and enter your Remote Access Code (3 digits followed by ✳), the system will give two short beeps and you must enter a remote command.

Remote commands		Operation details
95	**Change the fax forwarding or fax storage settings**	
	1 OFF	You can choose `Off` after you have retrieved or erased all your messages.
	2 Fax forwarding	One long beep means the change is accepted. If you hear three short beeps, you cannot change because the conditions have not been met (for example, registering a fax forwarding number). You can register your fax forwarding number by entering 4. (See *Changing the fax forwarding number* on page 69.) Once you have registered the number, fax forwarding will work.
	4 Fax forwarding number	
	6 Fax storage	
96	**Retrieve a fax**	
	2 Retrieve all faxes	Enter the number of a remote fax machine to receive stored fax messages. (See *Retrieving fax messages* on page 68.)
	3 Erase faxes from the memory	If you hear one long beep, fax messages have been erased from the memory.
97	**Check the receiving status**	
	1 Fax	You can check whether your machine has received any faxes. If yes, you will hear one long beep. If no, you will hear three short beeps.
98	**Change the receive mode**	
	1 External TAD	If you hear one long beep, your change has been accepted.
	2 Fax/Tel	
	3 Fax Only	
90	**Exit**	Press **9 0** to exit remote retrieval. Wait for the long beep, then replace the handset.

10 Polling

Polling lets you set up your machine so other people can receive faxes from you, but they pay for the call. It also lets you call somebody else's fax machine and receive a fax from it, so you pay for the call. The polling feature needs to be set up on both machines for this to work. Not all fax machines support polling.

Polling receive

Polling receive lets you call another fax machine to receive a fax.

1. Make sure you are in Fax mode .
2. Press **Menu**, **2**, **1**, **8**.

```
21.Setup Receive
  8.Polling RX
▲    Standard
▼    Secure
Select ▲▼ or OK
```

3. Press ▲ or ▼ to choose `Standard`.
   Press **OK**.
4. Enter the fax number you are polling.
   Press **Mono Start** or **Colour Start**.

Secure polling

Secure Polling lets you restrict who can get the documents you set up to be polled. Secure Polling only works with Brother fax machines. If you want to get a fax from a secured Brother machine you have to enter the secure code.

1. Make sure you are in Fax mode .
2. Press **Menu**, **2**, **1**, **8**.

```
21.Setup Receive
  8.Polling RX
▲    Standard
▼    Secure
Select ▲▼ or OK
```

3. Press ▲ or ▼ to choose `Secure`.
   Press **OK**.
4. Enter a four-digit secure code.
   Press **OK**.
   This is the security code of the fax machine you are polling.
5. Enter the fax number you are polling.
6. Press **Mono Start** or **Colour Start**.

Delayed polling

Delayed polling lets you set the machine to begin polling receive at a later time. You can only set up *one* delayed polling operation.

1. Make sure you are in Fax mode.
2. Press **Menu**, **2**, **1**, **8**.

```
21.Setup Receive
  8.Polling RX
▲    Standard
▼    Secure
Select ▲▼ or OK
```

3. Press ▲ or ▼ to choose `Timer`.
   Press **OK**.
4. Enter the time (in 24-hour format) you want to begin polling.
   Press **OK**.
   For example, enter 21:45 for 9:45 PM.
5. Enter the fax number you are polling.
   Press **Mono Start** or **Colour Start**.
   The machine makes the polling call at the time you entered.

Sequential polling

Sequential polling lets you request documents from several fax machines in one operation.

1. Make sure you are in Fax mode.
2. Press **Menu**, **2**, **1**, **8**.

```
21.Setup Receive
  8.Polling RX
▲    Standard
▼    Secure
Select ▲▼ or OK
```

3. Press ▲ or ▼ to choose `Standard`, `Secure` or `Timer`.
   Press **OK**.
4. Choose one of the options below.
   - If you choose `Standard`, go to ❺.
   - If you choose `Secure`, enter a four-digit number, press **OK**, go to ❺.
   - If you choose `Timer`, enter the time (in 24-hours format) you want to begin polling and press **OK**, go to ❺.
5. Specify the destination fax machines you want to poll by using One-Touch, Speed-Dial, Search, a Group and or the dial pad. You must press **OK** between each location.
6. Press **Mono Start** or **Colour Start**.
   The machine polls each number or group in turn for a document.

Press **Stop/Exit** while the machine is dialling to cancel the polling process.

To cancel all sequential polling receive jobs, press **Menu**, **2**, **6**. (See *Checking and cancelling waiting jobs* on page 43.)

Polled transmit (black & white only)

Polled transmit lets you set up your machine to wait with a document so another fax machine can call and retrieve it.

Setup for polled transmit

1. Make sure you are in Fax mode .
2. Load your document.
3. Press **Menu**, **2**, **2**, **6**.

```
22.Setup Send
  6.Polled TX
▲    Standard
▼    Secure
Select ▲▼ or OK
```

4. Press ▲ or ▼ to choose `Standard`.
   Press **OK**.
5. Press **2** to choose `2. No` if you don't want to enter more settings when the LCD asks you the following messages:

```
22.Setup Send
  Next?
▲    1.Yes
▼    2.No
Select ▲▼ or OK
```

6. Press **Mono Start**.
7. If you are using the scanner glass, the LCD will prompt you to choose one of the option below:

```
Flatbed Fax:
 Next Page?
▲  1.Yes
▼  2.No (Send)
Select ▲▼ or OK
```

   - Press **1** to send another page.

     Go to ❽.
   - Press **2** or **Mono Start** to send the document.

8. Place the next page on the scanner glass, press **OK**. Repeat ❼ and ❽ for each additional page.

```
Flatbed Fax:

Set Next Page
Then Press OK
```

Note

The document will be stored and can be retrieved from any other fax machine until you delete the fax from memory.

To delete the fax from memory, press **Menu**, **2**, **6**. (See *Checking and cancelling waiting jobs* on page 43.)

Setup for polled transmit with a secure code

Secure Polling lets you restrict who can get the documents you set up to be polled. Secure Polling only works with Brother fax machines. If another person wants to retrieve a fax from your machine they will have to enter the secure code.

1. Make sure you are in Fax mode .
2. Load your document.
3. Press **Menu**, **2**, **2**, **6**.

```
22.Setup Send
  6.Polled TX
▲    Standard
▼    Secure
Select ▲▼ or OK
```

4. Press ▲ or ▼ to choose `Secure`.
   Press **OK**.
5. Enter a four-digit number.
   Press **OK**.
6. Press **2** to choose `2.No` if you don't want to enter more settings when the LCD asks you the following messages:

```
22.Setup Send
  Next?
▲    1.Yes
▼    2.No
Select ▲▼ or OK
```

7. Press **Mono Start**.
8. If you are using the scanner glass, the LCD will prompt you to choose one of the option below:

```
Flatbed Fax:
 Next Page?
▲  1.Yes
▼  2.No (Send)
Select ▲▼ or OK
```

   - Press **1** to send another page.

     Go to ❾.
   - Press **2** or **Mono Start** to send the document.

9. Place the next page on the scanner glass, press **OK**. Repeat ❼ and ❽ for each additional page.

```
Flatbed Fax:

Set Next Page
Then Press OK
```

Note

The document will be stored and can be retrieved from any other fax machine until you delete the fax from memory.

To delete the fax from memory, press **Menu**, **2**, **6**. (See *Checking and cancelling waiting jobs* on page 43.)

11 Printing reports

Fax reports

Some fax reports (transmission verification and fax journal) can be printed automatically and manually.

Transmission verification report

You can use the transmission report as proof that you sent a fax. This report lists the time and date of transmission and whether the transmission was successful (shown as “OK”). If you choose `On` or `On+Image`, the report will print for every fax you send.

If you send a lot of faxes to the same place, you may need more than the job numbers to know which faxes you must send again. Choosing `On+Image` or `Off+Image` will print a section of the fax’s first page on the report to help you remember.

When the verification report is turned `Off` or to `Off+Image`, the report will *only* print if there is a transmission error.

1. Press **Menu**, **2**, **4**, **1**.

```
24.Report Setting
  1.XMIT Report
▲    Off
▼    Off+Image
Select ▲▼ or OK
```

2. Press ▲ or ▼ to choose `On`, `On+Image`, `Off` or `Off+Image`.
   Press **OK**.

3. Press **Stop/Exit**.

Fax journal

You can set the machine to print a fax journal (activity report) at specific intervals (every 50 faxes, 6, 12 or 24 hours, 2 or 7 days). The default setting is `Every 50 Faxes`, this means that your machine will print the journal when the machine has stored 50 jobs.

If you set the interval to `Off`, you can still print the report by following the steps on the next page.

1. Press **Menu**, **2**, **4**, **2**.

```
24.Report Setting
  2.Journal Period
▲    Every 50 Faxes
▼    Every 6 Hours
Select ▲▼ or OK
```

2. Press ▲ or ▼ to choose an interval.
   Press **OK**.
   If you choose 7 days, you will be asked to choose a day when you want the 7 day countdown to begin.

3. Enter the time to begin printing, in 24 hour format.
   Press **OK**.
   For example: enter 19:45 for 7:45 PM.

4. Press **Stop/Exit**.

If you choose 6, 12, 24 hours, 2 or 7 days, the machine will print the report at the selected time and then erase all jobs from its memory. If the machine’s memory becomes full with 200 jobs before the time you chose has passed, the machine will print the journal early and then erase all jobs from memory.

If you want an extra report before it is due to print, you can print it manually without erasing the jobs from memory.

Reports

The following reports are available:

1 `XMIT Verify`

Displays the Transmission Verification Report for your last outgoing 200 faxes and prints the last report.

2 `Help List`

Prints a list of commonly used functions to help you program your machine.

3 `Tel Index List`

Prints a list of names and numbers stored in the One-Touch and Speed-Dial memory in numerical or alphabetical order.

4 `Fax Journal`

Prints a list of information about your last 200 incoming and outgoing faxes. (TX: transmit.) (RX: receive.)

5 `User Settings`

Print a list of your current settings.

6 `Network Config`

Lists your network settings.

7 `Order Form`

You can print an accessories order form to fill out and send to your Brother dealer.

How to print a report

1 Press **Menu**, **6**.

```
6.Print Reports
 1.XMIT Verify
 2.Help List
 3.Tel Index List
Select ▲▼ or OK
```

2 Do one of the following:

- Press ▲ or ▼ to choose the report you want.

  Press **OK**.

- Enter the number of the report you want to print. For example, press **2** to print the help list.

3 Press **Mono Start** or **Colour Start**.

4 Press **Stop/Exit**.

Section III

Copy

Making copies 78

12 Making copies

How to copy

Entering copy mode

Press (**Copy**) to enter Copy mode.

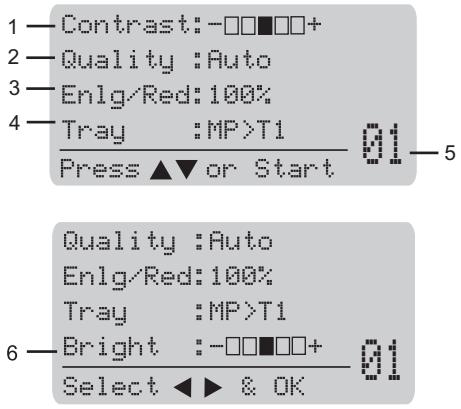

1 **Contrast**
2 **Quality**
3 **Copy ratio**
4 **Tray selection**
5 **Number of copies**
6 **Brightness**

Making a single copy

1. Make sure you are in Copy mode .
2. Load your document.
3. Press **Mono Start** or **Colour Start**.

Making multiple copies

1. Make sure you are in Copy mode .
2. Load your document.
3. Use the dial pad to enter the number of copies (up to 99).
4. Press **Mono Start** or **Colour Start**.

Note

(To sort your copies, see *Sorting copies using the ADF* on page 83.)

If the LCD shows "`Please Wait`" and the machine stops copying while you are making multiple copies, please wait for 30 to 40 seconds until the machine finishes the colour registration and cleaning process of the belt unit.

Stop copying

To stop copying, press **Stop/Exit**.

Copy options (temporary settings)

When you want to quickly change the copy settings temporarily for the next copy, use the temporary **Copy** keys. You can use different combinations.

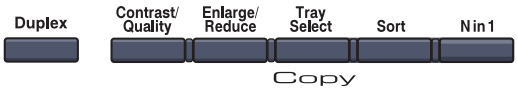

The machine returns to its default settings after 60 seconds or if the Mode Timer returns the machine to Fax mode. (See *Mode timer* on page 22.)

Changing copy quality

You can choose from a range of quality settings. The default setting is Auto.

- Auto

  Auto is the recommended mode for ordinary printouts. Suitable for documents that contain both text and photographs.

- Text

  Suitable for documents containing only text.

- Photo

  Suitable for copying photographs.

To *temporarily* change the quality setting, follow the steps below:

1. Make sure you are in Copy mode.
2. Load your document.
3. Use the dial pad to enter the number of copies (up to 99).
4. Press **Contrast/Quality**. Press ▲ or ▼ to choose Quality.
   Press **OK**.
5. Press ◀ or ▶ to choose Auto, Text or Photo.
   Press **OK**.
6. Press **Mono Start** or **Colour Start**.

To change the *default* setting, follow the steps below:

1. Press **Menu**, **3**, **1**.

   ```
   31.Quality
   ▲    Auto
        Text
   ▼    Photo
   Select ▲▼ or OK
   ```

2. Press ▲ or ▼ to choose the copy quality.
   Press **OK**.
3. Press **Stop/Exit**.

Enlarging or reducing the image copied

You can choose the following enlargement or reduction ratios:

Press	
Enlarge/ Reduce	**100%***
	104% EXE→LTR
	141% A5→A4
	200%
	Custom(25-400%)
	50%
	70% A4→A5
	78% LGL→LTR
	83% LGL→A4
	85% LTR→EXE
	91% Full Page
	94% A4→LTR
	97% LTR→A4

Custom(25-400%) allows you to enter a ratio from 25% to 400%.

To enlarge or reduce the next copy follow the instructions below:

1. Make sure you are in Copy mode.
2. Load your document.
3. Use the dial pad to enter the number of copies (up to 99).
4. Press **Enlarge/Reduce**.
   Press ▶.
5. Do one of the following:
   - Press ▲ or ▼ to choose the enlargement or reduction ratio you want.
     Press **OK**.
   - Press ▲ or ▼ to choose `Custom(25-400%)`.
     Press **OK**.
     Use the dial pad to enter an enlargement or reduction ratio from `25%` to `400%`. (For example, press **5** **3** to enter `53%`.)
     Press **OK**.
6. Press **Mono Start** or **Colour Start**.

Note

Page Layout Options `2 in 1 (P)`, `2 in 1 (L)`, `4 in 1 (P)`, `4 in 1 (L)` are *not* available with Enlarge/Reduce.

Making N in 1 copies (page layout)

You can reduce the amount of paper used when copying by using the N in 1 copy feature. This allows you to copy two or four pages onto one page, which lets you save paper.

Important

- Please make sure the paper size is set to `Letter`, `A4`, `Legal` or `Folio`.
- (`P`) means Portrait and (`L`) means Landscape.
- You cannot use the Enlarge/Reduce setting with the N in 1 feature.

1. Make sure you are in Copy mode.
2. Load your document.
3. Use the dial pad to enter the number of copies (up to 99).
4. Press **N in 1**.
5. Press ▲ or ▼ to choose `2 in 1 (P)`, `2 in 1 (L)`, `4 in 1 (P)`, `4 in 1 (L)` or `Off(1 in 1)`.
   Press **OK**.
6. Press **Mono Start** or **Colour Start** to scan the page.
   If you placed the document in the ADF, the machine scans the pages and starts printing.
   If you are using the scanner glass, go to ❼.
7. After the machine scans the page, press **1** to scan the next page.

```
Flatbed Copy:
 Next Page?
▲  1.Yes
▼  2.No
Select ▲▼ or OK
```

8. Put the next page on the scanner glass.
   Press **OK**.
   Repeat ❼ and ❽ for each page of the layout.
9. After all the pages have been scanned, press **2** in ❼ to finish.

If you are copying from the ADF:

Insert your document face up in the direction shown below:

■ **2 in 1 (P)**

■ **2 in 1 (L)**

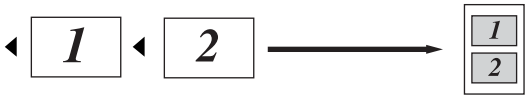

■ **4 in 1 (P)**

■ **4 in 1 (L)**

If you are copying from the scanner glass:

Insert your document face down in the direction shown below:

■ **2 in 1 (P)**

■ **2 in 1 (L)**

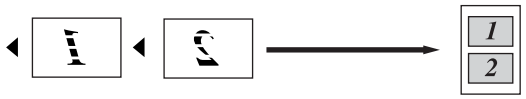

■ **4 in 1 (P)**

■ **4 in 1 (L)**

Duplex (2-sided) copying

If you want to use the “2 sided → 2 sided” or “2 sided → 1 sided” copy feature, load your document in the ADF.

If you get an Out of Memory message while you are making duplex copies, try installing extra memory. (See *Out of memory message* on page 85.)

Duplex copy (long edge)

■ **1 sided → 2 sided**

Portrait

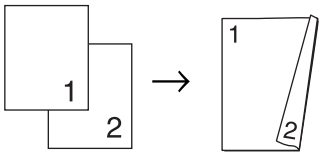

Landscape

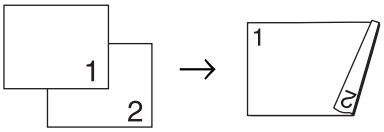

■ **2 sided → 2 sided**

Portrait

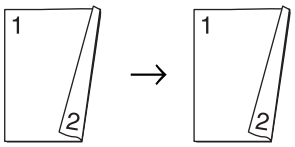

Landscape

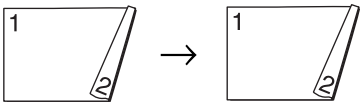

■ **2 sided → 1 sided**

Portrait

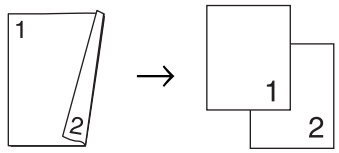

Landscape

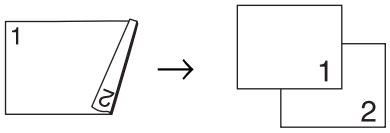

1. Make sure you are in Copy mode.
2. Load your document.
3. Use the dial pad to enter the number of copies (up to 99).
4. Press **Duplex** and ▲ or ▼ to select `1sided → 2sided`, `2sided → 2sided` or `2sided → 1sided`.

```
Duplex
▲1sided → 2sided
 2sided → 2sided
▼2sided → 1sided
Select ▲▼ or OK
```

Press **OK**.

5. Press **Mono Start** or **Colour Start** to scan the document.

Note

Duplex copy using a 2-sided legal size document is not available.

Advanced Duplex copy (short edge)

■ **Advanced 2 sided → 1 sided**

Portrait

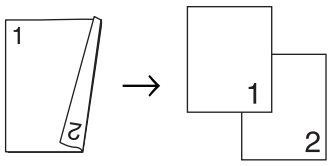

Landscape

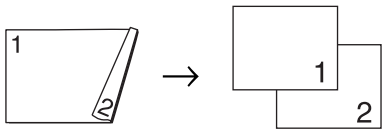

■ **Advanced 1 sided → 2 sided**

Portrait

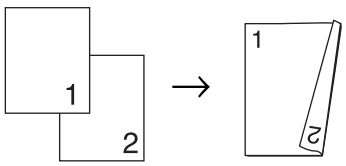

Landscape

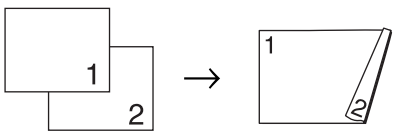

1. Make sure you are in Copy mode.
2. Load your document.
3. Use the dial pad to enter the number of copies (up to 99).
4. Press **Duplex** and ▲ or ▼ to select `Advanced`.

```
Duplex
▲1sided → 2sided
 2sided → 2sided
▼2sided → 1sided
Select ▲▼ or OK
```

Press **OK**.

5 Press ▲ or ▼ to select `2sided → 1sided` or `1sided → 2sided`.
Press **OK**.

```
Duplex Advanced
▲2sided → 1sided
▼1sided → 2sided

Select ▲▼ or OK
```

6 Press **Mono Start** or **Colour Start** to scan the document.

Note

Duplex copy using a 2-sided legal size document is not available from the ADF.

Sorting copies using the ADF

You can sort multiple copies. Pages will be stacked in the order 1 2 3, 1 2 3, 1 2 3, and so on.

1 Make sure you are in Copy mode.

2 Load your document in the ADF.

3 Use the dial pad to enter the number of copies (up to 99).

4 Press **Sort**.

5 Press **Mono Start** or **Colour Start**.

Adjusting brightness, contrast and colour

Brightness

Adjust the copy brightness to make copies darker or lighter.

To *temporarily* change the copy brightness setting, follow the steps below:

1 Make sure you are in Copy mode.

2 Load your document.

3 Use the dial pad to enter the number of copies (up to 99).

4 Press ▲ or ▼ to choose `Bright`.

```
Quality :Auto
Enlg/Red:100%
Tray    :MP>T1
Bright  :-□□■□□+▶
Select ◀ ▶ & OK
```

5 Press ▶ to make a lighter copy or press ◀ to make a darker copy.
Press **OK**.

6 Press **Mono Start** or **Colour Start**.

To change the *default* setting follow the steps below:

1. Press **Menu**, **3**, **2**.

2. Press ▶ to make a lighter copy or press ◀ to make a darker copy.
Press **OK**.

3. Press **Stop/Exit**.

Contrast

Adjust the contrast to help an image look sharper and more vivid.

To *temporarily* change the contrast setting, follow the steps below:

1. Make sure you are in Copy mode .

2. Load your document.

3. Use the dial pad to enter the number of copies (up to 99).

4. Press **Contrast/Quality**.
Press ▲ or ▼ to choose `Contrast`.
Press **OK**.

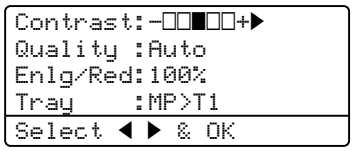

5. Press ◀ or ▶ to increase or decrease the contrast.
Press **OK**.

6. Press **Mono Start** or **Colour Start**.

To change the *default* setting follow the steps below:

1. Press **Menu**, **3**, **3**.

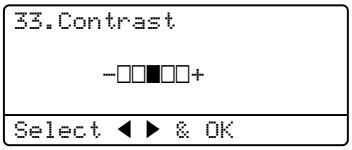

2. Press ◀ or ▶ to increase or decrease the contrast.
Press **OK**.

3. Press **Stop/Exit**.

Colour adjust

You can change the default setting for colour saturation.

To change the *default* setting follow the steps below:

1. Press **Menu**, **3**, **4**.

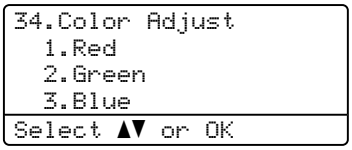

2. Press ▲ or ▼ to choose `1.Red`, `2.Green` or `3.Blue`.
Press **OK**.

3. Press ◀ or ▶ to increase or decrease the colour saturation.
Press **OK**.

4. Return to ❷ to choose the next colour.
Or press **Stop/Exit**.

Tray selection

You can change the tray use only for the next copy.

1. Make sure you are in Copy mode .
2. Load your document.
3. Use the dial pad to enter the number of copies (up to 99).
4. Press **Tray Select**.
5. Press ◀ or ▶ to choose the `MP>T1`, `T1>MP`, `#1(XXX)` [1] and `MP(XXX)` [1]. Press **OK**.
6. Press **Mono Start** or **Colour Start**.

Press **Tray Select**	`MP>T1` or `M>T1>T2`
	`T1>MP` or `T1>T2>M`
	`#1(XXX)` [1]
	`#2(XXX)` [1]
	`MP(XXX)` [1]

[1] XXX is the paper size you set in **Menu**, **1**, **3**.

Note

- T2 or #2 appears only if the optional paper tray is installed.
- To change the default setting for Tray Select, see *Tray use in copy mode* on page 23.

Out of memory message

If the memory becomes full while you are making copies, the LCD message will guide you through the next step.

If you get an `Out of Memory` message while scanning a subsequent page, you will have the option to press **Mono Start** or **Colour Start** to copy the pages scanned so far, or to press **Stop/Exit** to cancel the operation.

To make extra memory available, you can do the following:

- Print the faxes that are in the memory. (See *Printing a fax from the memory* on page 49.)
- Turn off Fax Storage. (See *Turning off remote fax options* on page 67.)
- Add optional memory. (See *Memory board* on page 110.)

Note

When you get an `Out of Memory` message, you may be able to make copies if you first print incoming faxes in the memory to restore the memory to 100%.

Section IV

Direct printing

Printing photos from a digital camera 88

Printing data from a USB flash memory drive 92

13 Printing photos from a digital camera

Your Brother machine supports the PictBridge standard, allowing you to connect to and print photos directly from any PictBridge compatible digital camera.
If your camera is using the USB Mass Storage standard, you can also print photos from a digital camera without PictBridge. (See *Connecting a camera as a storage device* on page 90.)

Before using PictBridge

PictBridge requirements

To avoid errors, remember the following points:

- The machine and the digital camera must be connected using a suitable USB cable.
- The image file must be taken with the digital camera you want to connect to the machine.

Using PictBridge

Setting your digital camera

Make sure your camera is in PictBridge mode. The following PictBridge settings may be available from the LCD of your PictBridge compatible camera.

- Copies
- Quality
- Paper size
- Date print
- File name print
- Layout

Note

The names and availability of each setting depends on the specification of your camera.

You can also set the following PictBridge settings by using the control panel.

Menu selections	Options
Paper Size	Letter, A4, B5, A5, B6, A6
Orientation	Portrait, Landscape [1]
Date & Time	Off, On
File Name	Off, On
Print Quality	Normal, Fine

[1] If you choose the paper size Letter, A4 or B5, Portrait will be chosen. If you choose A5, B6 or A6, Landscape will be chosen.

1. Press **Menu**, **5**, **3**.

```
53.PictBridge
  1.Paper Size
  2.Orientation
  3.Date & Time
Select ▲▼ or OK
```

2. To set the PictBridge settings, press ▲ or ▼ to choose `1.Paper Size`, `2.Orientation`, `3.Date & Time`, `4.File Name`, or `5.Print Quality`. Press **OK**.

3. Press ▲ or ▼ to choose an option for each menu Setting. Press **OK**.

4. Press **Stop/Exit**. Repeat ❷ to ❸ for each PictBridge setting.

Note

- Camera settings are prioritised as long as your camera is not set to use your machine's settings (default settings). If your camera is set to use your machine's settings, the machine will print your photo using the settings below.

Machine settings	Default settings
Paper Size	A4
Orientation	Portrait
Date & Time	Off
File Name	Off
Print Quality	Normal

- Please refer to the documentation supplied with your camera for more detailed information on changing PictBridge settings.

Printing images

1. Make sure that your camera is turned off. Connect your camera to the USB direct interface (1) on the front of the machine using a suitable USB cable.

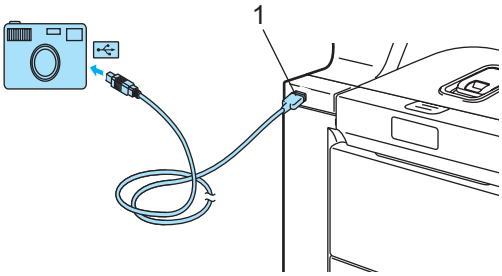

2. Turn on the camera. Make sure your camera is in PictBridge mode. When the machine has recognized the camera, the LCD shows the following message depending on which mode the machine is in:

```
01/09/2008 09:03

Fax Only
Camera Connected
```

```
▲Scan to FTP
 Scan to E-mail
 Scan to Image
▼Scan to OCR
Camera Connected
```

```
Contrast:-□□■□□+
Quality :Auto
Enlg/Red:100%
Tray    :MP>T1
Camera Connected
```

3. Set your camera to print an image. Set the number of copies if you are asked.

When the machine starts printing an image, the LCD will show the following message:

```
PictBridge


Printing. Keep...
```

Note

Please refer to the documentation supplied with your camera for detailed operations how to print using PictBridge.

CAUTION

To prevent damage to your machine, DO NOT connect any device other than a digital camera or USB flash memory drive to the USB direct interface.

DO NOT remove the digital camera from the USB direct interface until the machine has finished printing.

DPOF printing

DPOF stands for Digital Print Order Format.

Major digital camera manufacturers (Canon Inc., Eastman Kodak Company, Fuji Photo Film Co. Ltd., Matsushita Electric Industrial Co. Ltd. and Sony Corporation) created this standard to make it easier to print images from a digital camera.

If your digital camera supports DPOF printing, you will be able to choose on the digital camera display the images and number of copies you want to print.

The following DPOF settings are available.

- 1 in 1 printing
- Copies

Connecting a camera as a storage device

Even if your camera is not in PictBridge mode, or does not support PictBridge, you can connect your camera as a normal storage device. This enables you to print photos from your camera.
Follow the steps in *Printing data directly from the USB flash memory drive* on page 93.
(If you would like to print photos in PictBridge mode, see *Setting your digital camera* on page 88.)

Note

The name of the storage mode and operation differs among digital cameras. Please refer to the documentation supplied with your camera for detailed information, such as how to switch from PictBridge mode to mass storage mode.

Understanding the error messages

Once you are familiar with the types of errors that can occur while you are using the USB direct interface, you can easily identify and troubleshoot any problems.

- `Out of Memory`

  This message will appear if you are working with files that are too large for the machine's memory.

- `Unusable Device`

  This message will appear if you connect an incompatible or broken device to the USB direct interface. To clear the error, unplug the device from the USB direct interface.

(For more detailed solutions, see *Error and maintenance messages* on page 131.)

14 Printing data from a USB flash memory drive

With the direct print feature, you do not need a computer to print data. You can print by just plugging your USB flash memory drive into the machine's USB direct interface.

Note

Some USB flash memory drives may not work with the machine.

Supported file formats

Direct print supports the following file formats:

- PDF version 1.6 [1]
- JPEG
- Exif + JPEG
- PRN (created by MFC-9840CDW driver)
- TIFF (scanned by all MFC or DCP Brother models)
- PostScript® 3™ (created by the MFC-9840CDW BRScript3 printer driver)

[1] The data including JBIG2 image file, JPEG2000 image file and layered files are not supported.

Creating a PRN or PostScript® 3™ file for direct printing

Note

The screens in this section may vary depending on your application and operating system.

1. From the menu bar of an application, click **File**, then **Print**.
2. Choose **Brother MFC-9840CDW Printer** (1) and check the **Print to file** box (2).
   Click **Print**.

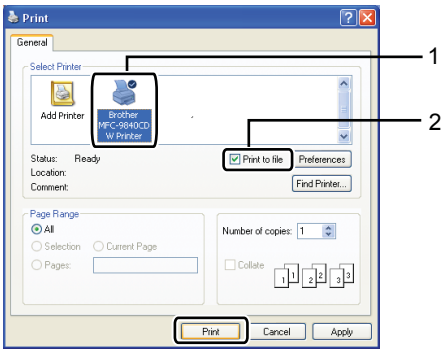

3. Choose the folder you want to save the file to and enter the file name if you are prompted to.
   If you are prompted for a file name only, you can also specify the folder you want to save the file in by entering the directory name. For example:

   C:\Temp\FileName.prn

   If you have a USB flash memory drive connected to your computer, you can save the file directly to the USB flash memory drive.

Printing data directly from the USB flash memory drive

1. Connect your USB flash memory drive to the USB direct interface (1) on the front of the machine.

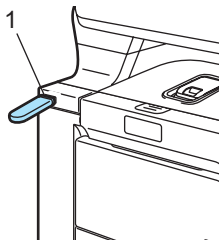

2. When the machine has recognized the USB flash memory drive, the **Direct** LED turns blue.
Press the **Direct** key.

```
Direct Print
▲1.FILE0_1.PDF
 2.FILE0_2.PDF
▼3.FILE0_3.PDF
Select ▲▼ or OK
```

3. Press ▲ or ▼ to choose the folder name or file name you want to print.
Press **OK**.
If you have chosen the folder name, press ▲ or ▼ to choose the file name you want to print.
Press **OK**.

Note

- If you want to print an index of the files, choose `Index Print`, and then press **OK**. Press **Mono Start** or **Colour Start** to print the data.
- File names containing more than 8 characters will appear on the LCD as the first 6 characters of the file name followed by a tilde mark (~) and a number. For example, “HOLIDAY2007.JPG” would appear as “HOLIDA~1.JPG”.
Only the following characters can be displayed on the LCD:
A B C D E F G H I J K L M N O P Q R S T U V W X Y Z 0 1 2 3 4 5 6 7 8 9 $ % ' ` - @ { } ~ ! # ( ) & _ ^

4. Do one of the following:
   - Press ▲ or ▼ to choose a setting you need to change and **OK**, and then press ▲ or ▼ to choose an option for the setting and press **OK**.
   - If you do not need to change the current default settings, go to ❺.

Note

- You can choose the following settings:

  `Paper Size`

  `Multiple Page`

  `Orientation`

  `Duplex`

  `Media Type`

  `Collate`

  `Tray Use`

  `Print Quality`

  `PDF Option`

- Depending on the file type, some of these settings may not appear.

5. Press **Mono Start** or **Colour Start** if you have finished.

6 Press the dial pad key to enter the number of copies you want.
Press **OK**.

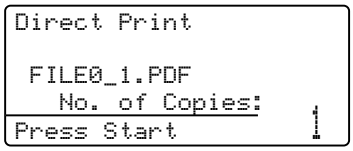

7 Press **Mono Start** or **Colour Start** to print the data.

8 Press **Stop/Exit**.

CAUTION

To prevent damage to your machine, DO NOT connect any device other than a digital camera or USB flash memory drive to the USB direct interface.

DO NOT remove the USB flash memory drive from the USB direct interface until the machine has finished printing.

Note

- If you want to change the default setting for the paper tray to feed paper from, press **Menu**, **1**, **7**, **3** to change the paper tray setting.
- You can change the default settings for direct print by using the control panel when the machine is not in the direct print mode. Press **Menu**, **5** to enter the `USB Direct I/F` menu. See *Menu table* on page 201.

Understanding the error messages

Once you are familiar with the types of errors that can occur while you are using the USB direct interface, you can easily identify and troubleshoot any problems.

- `Out of Memory`

  This message will appear if you are working with files that are too large for the machine's memory.

- `Unusable Device`

  This message will appear if you connect an incompatible or broken device to the USB direct interface. To clear the error, unplug the device from the USB direct interface.

(See *Error and maintenance messages* on page 131 for the detailed solution.)

Section V

Software

Software and network features 96

15 Software and network features

The User's Guide on the CD-ROM includes the Software User's Guide and Network User's Guide for features available when connected to a computer (for example, printing and scanning). These guides have easy to use links that, when clicked, will take you directly to a particular section.

You can find information on these features:

- Printing
- Scanning
- ControlCenter3 (for Windows®)
- ControlCenter2 (for Macintosh®)
- Remote Setup
- Faxing from your computer
- LDAP
- Network Faxing
- Network Printing
- Network Scanning
- Wireless Network Users

Note

See *Accessing the User's Guides* on page 3.

How to read HTML User's Guides

This is a quick reference for using the HTML User's Guides.

For Windows®

Note

If you have not installed the software, see *Viewing documentation (Windows®)* on page 3.

1. From the **Start** menu, point to **Brother**, **MFC-9840CDW** from the programs group, then click **User's Guides in HTML format**.
2. Click on the manual you want (**SOFTWARE USER'S GUIDE**, **NETWORK USER'S GUIDE** or **USER'S GUIDE**) from the top menu.

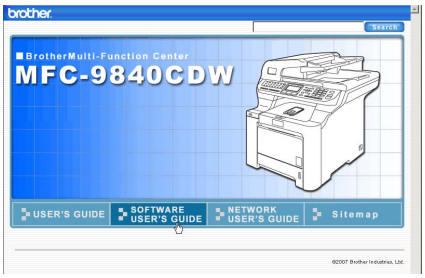

3. Click the heading you would like to view from the list at the left of the window.

For Macintosh®

1. Make sure your Macintosh® is turned on. Insert the Brother CD-ROM into your CD-ROM drive.
2. Double-click the **Documentation** icon.
3. Double-click your language folder, and then double-click the top page file.
4. Click on the manual you want (**SOFTWARE USER'S GUIDE**, **NETWORK USER'S GUIDE** or **USER'S GUIDE**) in the top menu, and then click the heading you would like to read from the list at the left of the window.

Section VI

Appendixes

Safety and legal	98
Options	107
Troubleshooting and routine maintenance	112
Menu and features	201
Specifications	222
Glossary	236

A Safety and legal

Choosing a location

Place your machine on a flat, stable surface that is free of vibration. Put the machine near a telephone socket and a standard, grounded electrical socket. Choose a location where the temperature remains between 10° C and 32.5° C and the humidity is between 20% to 80% (without condensation).

- Make sure cables leading to the machine DO NOT constitute a trip hazard.
- Avoid placing your machine on the carpet.
- DO NOT place the machine near heaters, air conditioners, water, chemicals or refrigerators.
- DO NOT expose the machine to direct sunlight, excessive heat, moisture or dust.
- DO NOT connect your machine to electrical sockets controlled by wall switches or automatic timers, or to the same circuit as large appliances that might disrupt the power supply.
- Avoid sources of interference, such as speakers or the base units of non-Brother cordless telephones.

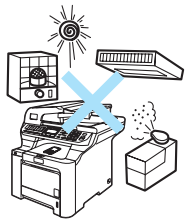

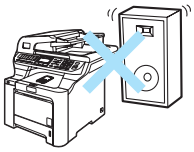

Important information

Safety precautions

Please read these instructions before attempting any maintenance, and keep them for later reference. When using your telephone equipment, follow basic safety precautions to reduce the risk of fire, electric shock or personal injury.

- DO NOT use this product near water, or in a damp environment.
- Avoid using this product during an electrical storm. There may be a remote risk of electric shock from lightning.
- We DO NOT advise using an extension lead.
- Never install telephone wiring during a lightning storm. Never install a telephone wall socket in a wet location.
- If any cables become damaged, disconnect your machine, and contact your Brother dealer.
- DO NOT place any objects on the machine, or obstruct the air vents.
- This product should be connected to an adjacent grounded AC power source within the range indicated on the rating label. DO NOT connect it to a DC power source. If you are not sure, contact a qualified electrician.
- DO NOT dispose of batteries in a fire. They may explode. Check with local codes for possible special disposal instructions.

WARNING

Before cleaning the inside of the machine, first unplug the telephone line cord, and then the power cord from the electrical socket.

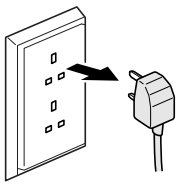

DO NOT handle the plug with wet hands. Doing this might cause an electrical shock.

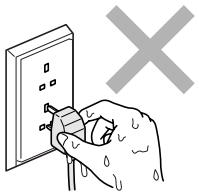

Always make sure the plug is fully inserted.

After you have just used the machine, some internal parts of the machine will be extremely hot. When you open the front or back cover of the machine, DO NOT touch the shaded parts shown in the illustration.

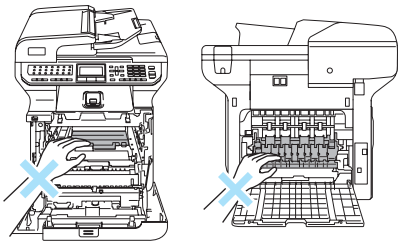

The fuser unit is marked with a caution label. DO NOT remove or damage the label.

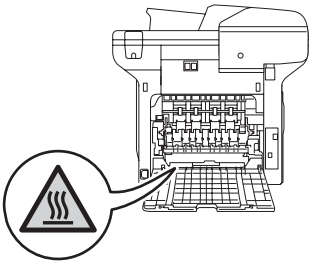

To prevent injuries, be careful not to put your hands on the edge of the machine under the document cover as shown in the illustration.

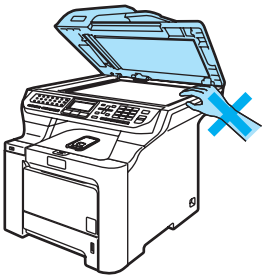

To prevent injuries, DO NOT put your fingers in the area shown in the illustration.

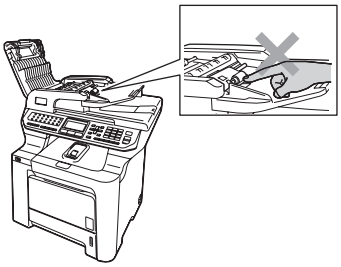

DO NOT use a vacuum cleaner to clean up scattered toner. Doing this might cause the toner dust to ignite inside the vacuum cleaner, potentially starting a fire. Please carefully clean the toner dust with a dry, lint-free cloth and dispose of it according to local regulations.

If moving your machine, use the handholds provided. First making sure to disconnect any cables. To prevent injuries when moving or lifting this machine, make sure to use at least two people.

DO NOT use flammable substances or any type of spray to clean the inside or outside of the machine. Doing this may cause a fire or electrical shock. Refer to *Routine maintenance* on page 149 for how to clean the machine.

IEC60825-1+A2:2001 Specification

This machine is a Class 1 laser product as defined in IEC60825-1+A2:2001 specifications. The label shown below is attached in countries where required.

This machine has a Class 3B Laser Diode which emits invisible laser radiation in the Scanner Unit. The Scanner Unit should not be opened under any circumstances.

Laser Diode

Wave length: 780 - 800 nm

Output: 30 mW max.

Laser Class: Class 3B

WARNING

Use of controls, adjustments or performance of procedures other than those specified in this manual may result in hazardous radiation exposure.

Disconnect device

This product must be installed near an electrical socket that is easily accessible. In case of emergencies, you must disconnect the power cord from the electrical socket to shut off the power completely.

Wiring information (U.K. only)

If you need to replace the plug fuse, fit a fuse that is approved by ASTA to BS1362 with the same rating as the original fuse.

Always replace the fuse cover. Never use a plug that does not have a cover. If in any doubt, call a qualified electrician.

Warning - This printer must be earthed.

The wires in the mains lead are coloured in line with the following code:

- Green and Yellow: Earth
- Blue: Neutral
- Brown: Live

LAN connection

CAUTION

DO NOT connect this product to a LAN connection that is subject to over-voltages.

Radio interference

This product complies with EN55022 (CISPR Publication 22)/Class B. When connecting the machine to a computer, ensure that you use the following interface cables.

A USB cable which must not exceed 2.0 metres in length.

EU Directive 2002/96/EC and EN50419

European
Union Only

This equipment is marked with the above recycling symbol. It means that all the end of the life of the equipment, you must dispose of it separately at an appropriate collection point, and not place it in the normal domestic unsorted waste stream. This will benefit the environment for all. (European Union only)

EU Directive 2006/66/EC - Removing or Replacing the Battery

This product incorporates a battery that is designed to last for the lifetime of the product. It is not to be replaced by the user. It should be removed as part of the machine recycling process at the end of life and appropriate precautions taken by the recycler.

Important safety instructions

1 Read all of these instructions.

2 Save them for later reference.

3 Follow all warnings and instructions marked on the product.

4 Unplug this product from the wall socket before cleaning inside of the machine. DO NOT use liquid or aerosol cleaners. Use a damp cloth for cleaning.

5 DO NOT place this product on an unstable cart, stand, or table. The product may fall, causing serious damage to the product.

6 Slots and openings in the casing at the back or bottom are provided for ventilation. To ensure reliable operation of the product and to protect it from overheating, these openings must not be blocked or covered. The openings should never be blocked by placing the product on a bed, sofa, rug, or other similar surface. This product should never be placed near or over a radiator or heater. This product should never be placed in a built-in installation unless adequate ventilation is provided.

7 This product should be connected to an AC power source within the range indicated on the rating label. DO NOT connect it to a DC power source. If you are not sure, contact a qualified electrician.

8 This product is equipped with a 3-wire grounded plug. This plug will only fit into a grounded power outlet. This is a safety feature. If you are unable to insert the plug into the outlet, call your electrician to replace your obsolete outlet. DO NOT defeat the purpose of the grounded plug.

9 Use only the power cord supplied with this machine.

10 DO NOT allow anything to rest on the power cord. DO NOT place this product where people can walk on the cord.

11 DO NOT place anything in front of the machine that will block received faxes. DO NOT place anything in the path of received faxes.

12 Wait until pages have exited the machine before picking them up.

13 Unplug this product from the power socket and refer all servicing to Brother Authorised Service Personnel under the following conditions:

- When the power cord is damaged or frayed.
- If liquid has been spilled into the product.
- If the product has been exposed to rain or water.
- If the product does not operate normally when the operating instructions are followed. Adjust only those controls that are covered by the operating instructions. Incorrect adjustment of other controls may result in damage and will often require extensive work by a qualified technician to restore the product to normal operation.
- If the product has been dropped or the casing has been damaged.
- If the product exhibits a distinct change in performance, indicating a need for service.

14 To protect your product against power surges, we recommend the use of a power protection device (Surge Protector).

15 To reduce the risk of fire, electric shock and injury to people, note the following:

- DO NOT use this product near appliances that use water, a swimming pool or in a wet basement.
- DO NOT use the machine during an electrical storm (there is the remote possibility of an electrical shock) or to report a gas leak in the vicinity of the leak.

Legal limitations for copying

It is an offence to make reproductions of certain items or documents with the intent to commit fraud. This memorandum is intended to be a guide rather than a complete list. We suggest you check with relevant legal authorities if in doubt about a particular item or document.

The following are examples of documents which should not be copied:

- Money
- Bonds or other certificates of indebtedness
- Certificates of Deposit
- Armed Forces Service or Draft papers
- Passports
- Postage Stamps (cancelled or uncancelled)
- Immigration Papers
- Welfare documents
- Cheques or Drafts drawn by Governmental Agencies
- Identification Documents, badges or insignias
- Licences and Certificates of Title to motor vehicles

Copyrighted works cannot be copied. Sections of a copyrighted work can be copied for ‘fair dealing’. Multiple copies would indicate improper use.

Works of art should be considered the equivalent of copyrighted works.

Trademarks

The Brother logo is a registered trademark of Brother Industries, Ltd.

Brother is a registered trademark of Brother Industries, Ltd.

Multi-Function Link is a registered trademark of Brother International Corporation.

Microsoft, Windows and Windows Server are registered trademarks of Microsoft Corporation in the U.S. and other countries.

Windows Vista is either a registered trademark or trademark of Microsoft Corporation in the United States and/or other countries.

Macintosh and TrueType are registered trademarks of Apple Inc.

PostScript is a registered trademark and PostScript 3 is a trademark of Adobe systems Incorporated.

Nuance, the Nuance logo, PaperPort and ScanSoft are trademarks or registered trademarks of Nuance Communications, Inc. or its affiliates in the United States and/or other countries.

Presto! PageManager is a registered trademark of NewSoft Technology Corporation.

PictBridge is a trademark.

BROADCOM, SecureEasySetup and the SecureEasySetup logo are trademarks or registered trademarks of Broadcom Corporation in the United States and/or other countries.

Java and all Java-based trademarks and logos are trademarks or registered trademarks of Sun Microsystems, Inc. in the United States and other countries.

Each company whose software title is mentioned in this manual has a Software License Agreement specific to its proprietary programs.

All other brand and product names mentioned in this User's Guide, the Software User's Guide, and the Network User's Guide are registered trademarks of their respective companies.

B Options

Optional paper tray

Order Number: LT-100CL

An optional lower tray can be installed, and it can hold up to 500 sheets of 80 g/m^2 paper.

When an optional tray is installed, the machine can hold up to 800 sheets of plain paper. If you want to buy an optional lower tray unit, contact your Brother dealer.

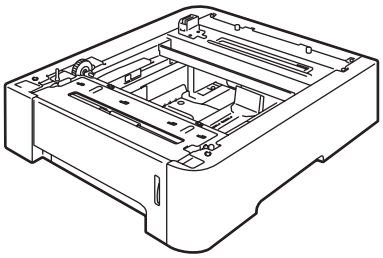

Installing the optional paper tray

WARNING

This machine is heavy. To prevent injuries use at least two people to lift the machine. Be careful not to pinch your fingers when you set the machine down.

1. Turn off the power switch. Unplug the telephone line cord and interface cable, and then unplug the power cord from the AC electrical socket.

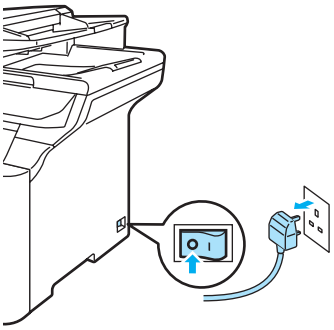

2. Using two people, lift the machine carefully and place it onto the optional lower tray unit, so that the alignment pins of the lower tray unit are inserted into the guide holes on the bottom of the machine as shown.

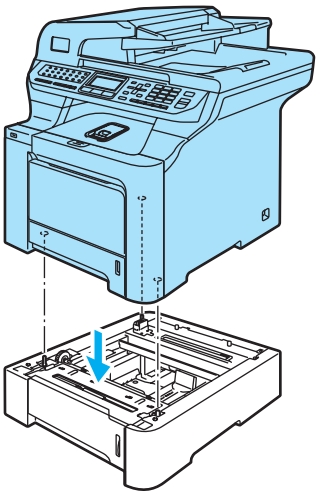

3 Pull the standard paper tray completely out of the machine and take the paper out of the paper tray.

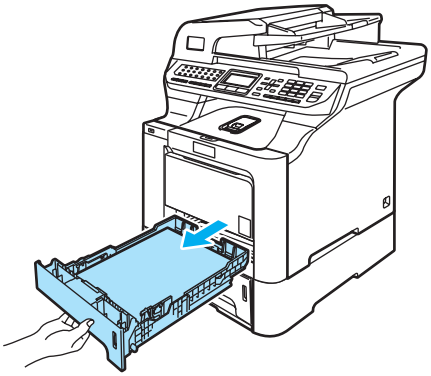

4 Using the screwdriver (1), take out the two screws as shown and save them (you will need them for step ❻), and then remove the paper tray front (2) from the standard paper tray.

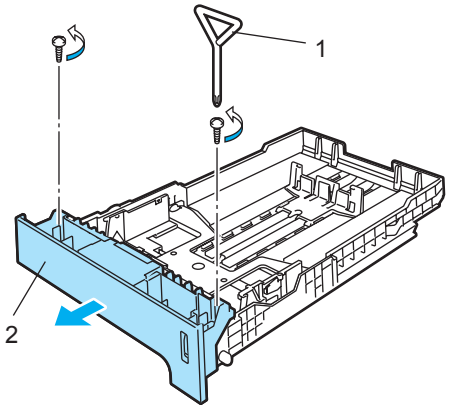

5 Follow the steps below to exchange the paper tray front of the standard paper tray to the new one (1).

1 Carefully lift up and hold the metal plate inside the paper tray (2).

2 While the metal plate is raised, lift the new paper tray front (1) to the front of the paper tray. Make sure that the blue paper indicator lever (3) passes through the hole (4).

3 Once the paper tray front is correctly fitted, let go of the metal plate. The blue lever should sit underneath the metal plate.

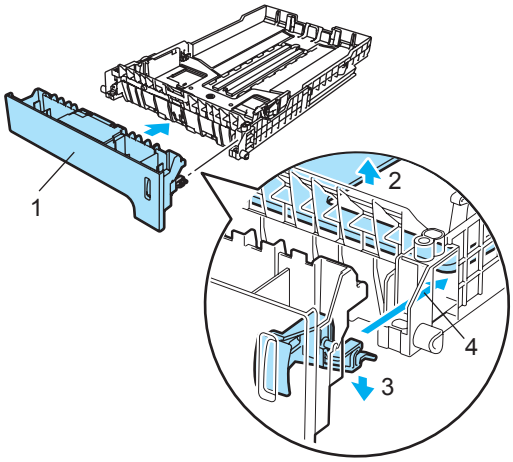

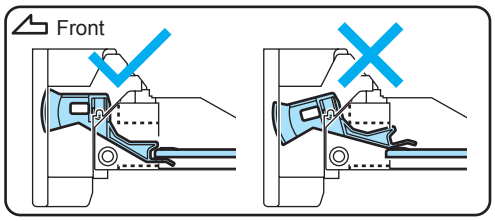

6 Fix the new paper tray front to the standard paper tray by putting the two screws back in (taken out in ❹). Then put the paper back in the paper tray and put the paper tray firmly back into the machine.

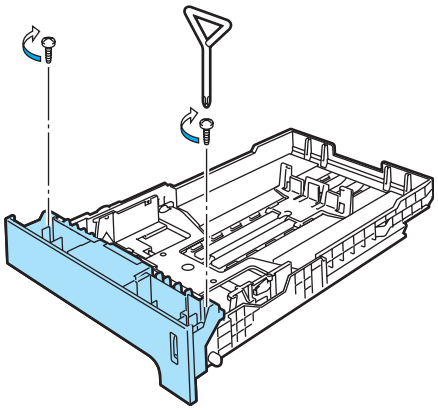

7 Plug the machine's power cord back into the AC electrical socket first, and reconnect all cables and telephone line cord.
Turn on the machine's power switch.

8 To set the paper size for the lower tray, press **Menu**, **1**, **3**, **3**. Press ▲ or ▼ to choose `A4`, `Letter`, `Legal`, `Executive`, `A5`, `B5`, `B6` or `Folio`.
Press **OK**, and then press **Stop/Exit**.

9 **For Windows® users:**
Go to **Start > Control Panel > Printers and Faxes**. Right-click on your printer icon and choose **Properties**. Choose the **Accessories** tab and click **Auto Detect**. When the optional lower tray and paper size have been detected click **Apply**.

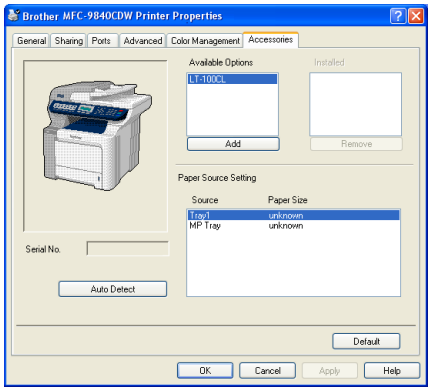

Note

The **Auto Detect** function is not available under the following machine conditions:

- The machine's power switch is off.
- The machine is in an error state.
- The machine is in a network shared environment.
- The cable is not connected to the machine correctly.

If this situation occurs, you can manually add the options you have installed. In **Available Options** select the option you have installed, click **Add**, and then click **Apply**.

For Macintosh® users:

The printer driver is already configured for use with the lower paper tray. No additional steps are required.

Memory board

This machine has 128 MB of standard memory and one slot for optional memory expansion. You can expand the memory up to 640 MB by installing 144 pin small outline dual in-line memory modules (SO-DIMMs). When you add the optional memory, it increases the performance for both copy and print operations.

In general, the machine uses industry-standard SO-DIMM with the following specifications:

Type: 144 pin and 64 bit output

CAS latency: 2

Clock frequency: 100 MHz or more

Capacity: 64 MB, 128 MB, 256 MB or 512 MB

Height: 31.75 mm

Dram Type: SDRAM 2 Bank

For purchasing information and part numbers visit the Buffalo Technology website: http://www.buffalo-technology.com/

Note

- There might be some SO-DIMMs that will not work with the machine.
- For more information, call the dealer you bought the machine from.

Installing extra memory

1. Turn off the machine's power switch. Unplug the telephone line cord.
2. Disconnect the interface cable from the machine, and then unplug the power cord from the electrical socket.
3. Remove the DIMM covers (1 and 2).

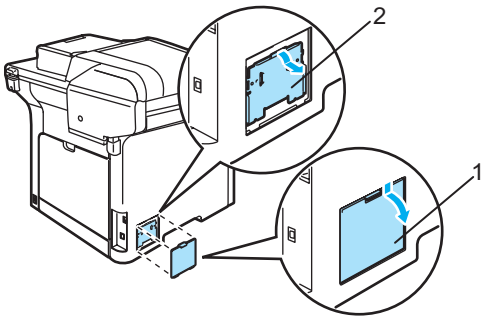

4. Unpack the DIMM and hold it by its edges.

CAUTION

To prevent damage to the machine from static electricity, DO NOT touch the memory chips or the board surface.

5. Hold the DIMM by the edges and align the notches in the DIMM with the protrusions in the slot. Insert the DIMM diagonally (1), then tilt it toward the interface board until it clicks into place (2).

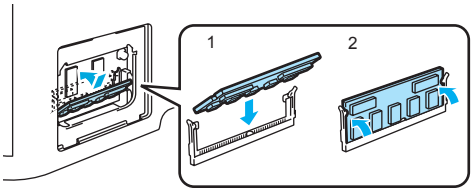

6 Put the DIMM covers (2 and 1) back on.

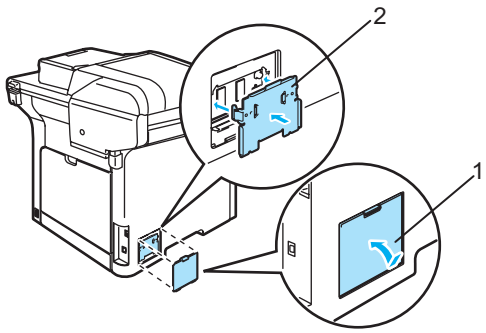

7 Plug the machine's power cord back into the electrical socket first, and then connect the interface cable.

8 Plug in the telephone line cord. Turn on the machine's power switch.

Note

To make sure that you have installed the SO-DIMM properly, you can print the user settings page that shows the current memory size. (See *Reports* on page 76.)

C Troubleshooting and routine maintenance

Troubleshooting

If you think there is a problem with your machine, check the chart below and follow the troubleshooting tips.

Most problems can be easily resolved by yourself. If you need additional help, the Brother Solutions Center offers the latest FAQs and troubleshooting tips. Visit us at http://solutions.brother.com.

Solutions to common problems

If you think there is a problem with the way your faxes look, make a copy first. If the copy looks good, the problem may not be your machine. Check the chart below and follow the troubleshooting tips.

Printing or receiving faxes

Difficulties	Suggestions
■ Condensed print ■ Horizontal streaks ■ Top and bottom sentences are cut off ■ Missing lines	Usually this is caused by a poor telephone connection. If your copy looks good, you probably had a bad connection, with static or interference on the telephone line. Ask the other party to send the fax again.
Poor print quality	See *Improving the print quality* on page 119.
Vertical black lines when receiving	One of the corona wires for printing may be dirty. Clean the four corona wires. (See *Cleaning the corona wires* on page 155.)
	The sender's scanner may be dirty. Ask the sender to make a copy to see if the problem is with the sending machine. Try receiving from another fax machine.
	If the problem continues, call Brother or your dealer for service.
Received faxes appear as split or blank pages.	If the received faxes are divided and printed on two pages or if you get an extra blank page, your paper size setting may not be correct for the paper you are using. (See *Paper size* on page 23.)
	Turn on auto reduction. (See *Printing a reduced incoming fax* on page 48.)

Telephone line or connections

Difficulties	Suggestions
Dialling does not work.	Check for a dial tone.
	Change `Tone/Pulse` setting. (See *the Quick Setup Guide*.)
	Check all line cord connections.
	Check that the machine is plugged in and switched on.
	If an external telephone is connected to the machine, send a manual fax by lifting the handset of the external telephone and dialling the number. Wait to hear fax receiving tones before pressing **Mono Start** or **Colour Start**.

Telephone line or connections (continued)

Difficulties	Suggestions
The machine does not answer when called.	Make sure the machine is in the correct receive mode for your setup. (See *Receiving a fax* on page 44.) Check for a dial tone. If possible, call your machine to hear it answer. If there is still no answer, check the telephone line cord connection. If you do not hear ringing when you call your machine, ask your telephone company to check the line.

Sending faxes

Difficulties	Suggestions
Poor sending quality.	Try changing your resolution to `Fine` or `S.Fine`. Make a copy to check your machine's scanner operation. If the copy quality is not good, clean the scanner. (See *Cleaning the scanner* on page 150.)
Transmission Verification Report says 'RESULT:ERROR'.	There is probably temporary noise or static on the line. Try sending the fax again. If you are sending a PC Fax message and get 'RESULT:NG' on the Transmission Verification Report, your machine may be out of memory. To free up extra memory, you can turn off fax storage (see *Turning off remote fax options* on page 67), print fax messages in memory (see *Printing a fax from the memory* on page 49) or cancel a delayed fax or polling job (see *Checking and cancelling waiting jobs* on page 43). If the problem continues, ask the telephone company to check your telephone line.
	If you often get transmission errors due to possible interference on the telephone line, try changing the Compatibility setting to `Basic(for VoIP)`. (See *Telephone line interference* on page 130.)
Vertical black lines when sending.	Black vertical lines on faxes you send are typically caused by dirt or correction fluid on the glass strip. (See *Cleaning the scanner* on page 150.)

Handling incoming calls

Difficulties	Suggestions
The machine 'Hears' a voice as a CNG Tone.	If Fax Detect is set to on, your machine is more sensitive to sounds. It may mistakenly interpret certain voices or music on the line as a fax machine calling and respond with fax receiving tones. Deactivate the machine by pressing **Stop/Exit**. Try avoiding this problem by turning Fax Detect to off. (See *Fax Detect* on page 47.)
Sending a Fax Call to the machine.	If you answered on an external or extension telephone, press your Fax Receive Code [default setting is (✳ 51)]. When your machine answers, hang up.
Custom features on a single line.	If you have Call Waiting, Call Waiting/Caller ID, Caller ID, Voice Mail, an answering machine, an alarm system or other custom feature on a single telephone line with your machine, it may create a problem sending or receiving faxes. **For Example:** If you subscribe to Call Waiting or some other custom service and its signal comes through the line while your machine is sending or receiving a fax, the signal can temporarily interrupt or disrupt the faxes. Brother's ECM feature should help overcome this problem. This condition is related to the telephone system industry and is common to all devices that send and receive information on a single, shared line with custom features. If avoiding a slight interruption is crucial to your business, a separate line with no custom features is recommended.

Menu access difficulties

Difficulties	Suggestions
Key operations do not work	Check that the control panel is fitted correctly on the machine. Reinstall the control panel.
The machine beeps when you try to access the Setup Receive and Setup Send menus.	If the **Fax** key is not illuminated, press it to turn on Fax mode. The Setup Receive setting (**Menu**, **2**, **1**) and Setup Send setting (**Menu**, **2**, **2**) are available only when the machine is in Fax mode.

Copy quality difficulties

Difficulties	Suggestions
Vertical black line appears in copies.	Black vertical lines on copies are typically caused by dirt or correction fluid on the glass strip, or one of the corona wires for printing is dirty. (See *Cleaning the scanner* on page 150 and *Cleaning the corona wires* on page 155.)

Printing difficulties

Difficulties	Suggestions
No printout.	■ Check that the machine is plugged in and the power switch is turned on. ■ Check that the toner cartridges and drum unit are installed properly. (See *Replacing the drum unit* on page 174.) ■ Check the interface cable connection on both the machine and your computer. (See *the Quick Setup Guide*.) ■ Check that the correct printer driver has been installed and chosen. ■ Check to see if the LCD is showing an error message. (See *Error and maintenance messages* on page 131.) ■ Check that the machine is online: (For Windows Vista®) Click the **Start** button, **Control Panel**, **Hardware and Sound**, and then **Printers**. Right-click **Brother MFC-9840CDW Printer**. Make sure that **Use Printer Offline** is unchecked. (For Windows® XP and Windows Server® 2003) Click the **Start** button and select **Printers and Faxes**.Right-click **Brother MFC-9840CDW Printer**. Make sure that **Use Printer Offline** is unchecked. (For Windows® 2000) Click the **Start** button and select **Settings** and then **Printers**.Right-click **Brother MFC-9840CDW Printer**. Make sure that **Use Printer Offline** is unchecked.
The machine prints unexpectedly or it prints garbage.	■ Pull out the paper tray and wait until the machine stops printing. Then turn off the machine's power switch and disconnect from the power for several minutes. (The machine can be turned off for up to 60 hours without losing faxes stored in the memory.) ■ Check the settings in your application to make sure it is set up to work with your machine.
The machine prints the first couple of pages correctly, then some pages have text missing.	■ Check the settings in your application to make sure that it is set up to work with your machine. ■ Your computer is not recognising the machine's input buffer's full signal. Make sure that you connected the interface cable correctly. (See *the Quick Setup Guide*.)

Printing difficulties (continued)

Difficulties	Suggestions
The headers or footers appear when the document displays on the screen but they do not show up when it is printed.	There is an unprintable area on the top and bottom of the page. Adjust the top and bottom margins in your document to allow for this.
The machine does not print on both sides of the paper even though the printer driver setting is Duplex.	Check the paper size setting in the printer driver. You need to select A4, Legal or Folio.
The machine is not printing or has stopped printing and the machine's Status LED turns yellow.	Press **Job Cancel**. As the machine cancels the job and clears it from the memory it may produce an incomplete printout.

Scanning difficulties

Difficulties	Suggestions
TWAIN errors appear while scanning.	Make sure that the Brother TWAIN driver is chosen as the primary source. In PaperPort ™ 11SE, click **File**, **Scan or Get Photo** and choose the **Brother TWAIN driver**.
Network scanning does not work.	See *Network difficulties* on page 116.

Software difficulties

Difficulties	Suggestions
Cannot install software or print.	Run the **Repair MFL-Pro Suite** program on the CD-ROM. This program will repair and reinstall the software.
Cannot perform '2 in 1 ' or '4 in 1 ' printing.	Check that the paper size setting in the application and in the printer driver are the same.
The machine does not print from Adobe Illustrator.	Try to reduce the print resolution. (See *Advanced tab in the Software User's Guide on the CD-ROM*.)

Paper handling difficulties

Difficulties	Suggestions
The machine does not load paper. The LCD shows `No Paper` or a Paper Jam message.	■ If there is no paper, load a new stack of paper into the paper tray. ■ If there is paper in the paper tray, make sure it is straight. If the paper is curled, you should straighten it. Sometimes it is helpful to remove the paper, turn the stack over and put it back into the paper tray. ■ Reduce the amount of paper in the paper tray, and then try again. ■ Check that the MP tray mode is not chosen in the printer driver. ■ If the LCD shows Paper Jam message and you still have a problem, see *Paper jams* on page 139.
The machine does not feed paper from the MP tray.	■ Fan the paper well and put it back in the tray firmly. ■ Make sure that MP tray mode is chosen in the printer driver.
How do I print envelopes?	You can load envelopes from the MP tray. Your application must be set up to print the envelope size you are using. This is usually done in the Page Setup or Document Setup menu of your application. (See your application's manual for more information.)

Paper handling difficulties (continued)

Difficulties	Suggestions
Which paper can I use?	You can use plain paper, recycled paper, envelopes and labels that are made for laser machines. (For details, see *Acceptable paper and other media* on page 11.)
There is a paper jam.	(See *Paper jams* on page 139.)

Print quality difficulties

Difficulties	Suggestions
Printed pages are curled.	■ Low quality thin or thick paper or not printing on the recommended side of the paper could cause this problem. Try turning over the stack of paper in the paper tray. ■ Make sure that you choose the Paper Type that suits the media type you are using. (See *Acceptable paper and other media* on page 11.)
Printed pages are smeared.	The Paper Type setting may be incorrect for the type of print media you are using, or the print media may be too thick or have a rough surface. (See *Acceptable paper and other media* on page 11 and *Basic tab in the Software User's Guide on the CD-ROM*.)
Printouts are too light.	■ If this problem occurs when making copies or printing received faxes, turn Toner Save mode to off in the machine menu settings. (See *Toner save* on page 26.) ■ Set Toner Save mode to off in the Advanced tab in the printer driver. (See *Advanced tab in the Software User's Guide on the CD-ROM*.)

Network difficulties

Difficulties	Suggestions
Cannot print over a wired Network.	If you are using a wireless connection or are having Network problems see *the Network User's Guide on the CD-ROM* for more information. Make sure your machine is powered on and is on-line and in Ready mode. Print the Network Configuration list to see your current Network settings. (See *How to print a report* on page 76.) Reconnect the LAN cable to the hub to verify that the cable and network connections are good. If possible, try connecting the machine to a different port on your hub using a different cable. If the connections are good, the upper LED of the back panel of the machine will be green.

Network difficulties (continued)

Difficulties	Suggestions
The network scanning feature does not work. The network PC Fax Receive feature does not work. The network printing feature does not work.	(For Windows® only) The firewall setting on your PC may be rejecting the necessary network connection. Follow the instructions below to configure your firewall. If you are using personal firewall software, see the User's Guide for your software or contact the software manufacturer. **For Windows® XP SP2 users:** 1 Click the **Start** button, **Control Panel**, **Network and Internet Connections** and then **Windows Firewall**. Make sure that **Windows Firewall** on the **General** tab is set to On. 2 Click the **Advanced** tab and **Settings...** button of the **Network Connection Settings**. 3 Click the **Add** button. 4 To add port 54925 for network scanning, enter the information below: 1. In **Description of service**: Enter any description, for example "Brother Scanner". 2. In **Name or IP address (for example 192.168.0.12) of the computer hosting this service on your network**: Enter "Localhost". 3. In **External Port number for this service**: Enter "54925". 4. In **Internal Port number for this service**: Enter "54925". 5. Make sure **UDP** is selected. 6. Click **OK**. 5 Click the **Add** button. 6 To add port 54926 for network PC Fax, enter the information below: 1. In **Description of service**: Enter any description, for example "Brother PC Fax". 2. In **Name or IP address (for example 192.168.0.12) of the computer hosting this service on your network**: Enter "Localhost". 3. In **External Port number for this service**: Enter "54926". 4. In **Internal Port number for this service**: Enter "54926". 5. Make sure **UDP** is selected. 6. Click **OK**. 7 If you still have trouble with your network connection, click the **Add** button. 8 To add port 137 for network scanning, network printing and network PC Fax receiving, enter the information below: 1. In **Description of service**: - Enter any description, for example "Brother PC Fax receiving" 2. In **Name or IP address (for example 192.168.0.12) of the computer hosting this service on your network**: Enter "Localhost". 3. In **External Port number for this service**: Enter "137". 4. In **Internal Port number for this service**: Enter "137". 5. Make sure **UDP** is selected. 6. Click **OK**. 9 Make sure if the new setting is added and is checked, and then click **OK**.

Network difficulties (continued)

Difficulties	Suggestions
The network scanning feature does not work. The network PC Fax Receive feature does not work. The network printing feature does not work. (continued)	**For Windows Vista® users:** 1 Click the **Start** button, **Control Panel**, **Network and Internet**, **Windows Firewall** and click **Change settings**. 2 When the **User Account Control** screen appears, do the following. ■ Users who have administrator rights: Click **Continue**. ■ For users who do not have administrator rights: Enter the administrator password and click **OK**. 3 Make sure that **Windows Firewall** on the **General** tab is set to On. 4 Click the **Exceptions** tab. 5 Click the **Add port...** button. 6 To add port 54925 for network scanning, enter the information below: 1. In **Name**: Enter any description, for example “Brother Scanner”. 2. In **Port number**: Enter “54925”. 3. Make sure **UDP** is selected. Then click **OK**. 7 Click the **Add port...** button. 8 To add port 54926 for Network PC Fax, enter the information below: 1. In **Name**: Enter any description, for example “Brother PC Fax”. 2. In **Port number**: Enter “54926”. 3. Make sure **UDP** is selected. Then click **OK**. 9 Make sure that the new setting is added and is checked, and then click **Apply**. 10 If you still have trouble with your network connection such as network scanning or printing, check **File and Printer Sharing** box in the **Exceptions** tab and then click **Apply**.
Your computer cannot find your machine.	**For Windows® users:** The firewall setting on your PC may be rejecting the necessary network connection. For details, see the instruction above. **For Macintosh® users:** Re-select your machine in the DeviceSelector application located in **Macintosh HD/Library/Printers/Brother/Utilities** or from the Model pop-up menu of ControlCenter2.

Other

Difficulties	Suggestions
The machine will not turn on.	Adverse conditions on the power connection (such as lightning or a power surge) may have triggered the machine’s internal safety mechanisms. Turn the machine off and unplug the power cord. Wait for ten minutes, then plug in the power cord and turn the machine on.

Improving the print quality

If you have a print quality problem, print a test page first (**Menu**, **4**, **2**, **3**). If the printout looks good, the problem is probably not the machine. Check the interface cable or try the machine on another computer.

Note

You can resolve a print quality problem by replacing a toner cartridge with a new one when the LCD shows the `Toner Life End` message.

Examples of poor print quality	Recommendation
White lines or bands or ribbing across the page 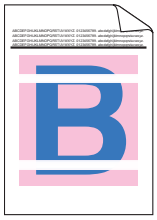	■ Make sure that the machine is on a solid level surface. ■ Make sure that the toner cartridges are installed properly. (See *Replacing a toner cartridge* on page 169.) ■ Shake the toner cartridges gently. ■ Make sure that the drum unit is installed properly. (See *Replacing the drum unit* on page 174.) ■ Make sure that you use paper that meets our specifications. A rough surfaced paper or thick print media can cause the problem. (See *Acceptable paper and other media* on page 11.) ■ Clean the laser scanner windows with a soft cloth. (See *Cleaning the laser scanner windows* on page 151.) ■ The drum unit may be damaged. Put in a new drum unit. (See *Replacing the drum unit* on page 174.)
Colours are light or unclear on the whole page. 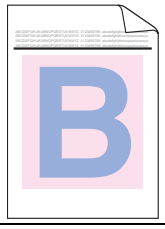	■ Make sure that the recommended paper was used. ■ Change the paper to freshly unpacked paper. ■ Make sure that the front cover is closed properly. ■ Shake the toner cartridges gently. ■ Clean the laser scanner windows with a soft cloth. (See *Cleaning the laser scanner windows* on page 151.) ■ Turn off Toner Save. (See *Toner save* on page 26.)
White streaks or bands down the page 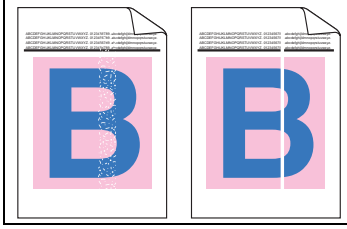	■ Shake the toner cartridges gently. ■ Clean the laser scanner windows with a soft cloth. (See *Cleaning the laser scanner windows* on page 151.)

Examples of poor print quality	Recommendation
Coloured streaks or bands down the page 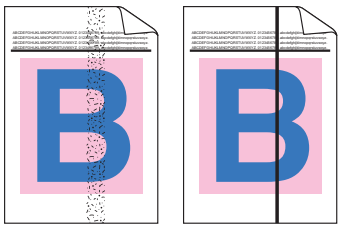	■ One of the toner cartridges may be damaged. Replace the toner cartridge that matches the colour of the streak or bond. ■ Clean all four corona wires (one for each colour) of the drum unit by sliding the green tab. (See *Cleaning the corona wires* on page 155.) ■ Make sure each corona wire's green tab is at the home position (▼). ■ The drum unit may be damaged. Put in a new drum unit. (See *Replacing the drum unit* on page 174.) ■ The fuser unit may have a smudge mark. Call Brother or your dealer for service.
Coloured lines across the page 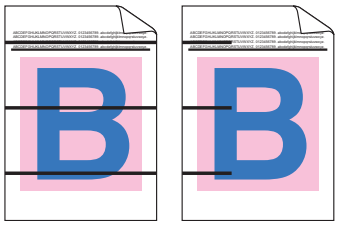	■ One of the toner cartridges may be damaged. Replace the toner cartridge that matches the colour of the line. ■ The drum unit may be damaged. Put in a new drum unit. (See *Replacing the drum unit* on page 174.) ■ Clean all four corona wires (one for each colour) of the drum unit by sliding the green tab. (See *Cleaning the corona wires* on page 155.) ■ Clean the laser scanner windows with a soft cloth. (See *Cleaning the laser scanner windows* on page 151.)
White spots or hollow print 	■ Make sure that you use paper that meets our specifications. (See *Acceptable paper and other media* on page 11.) ■ Make sure that the recommended paper was used. ■ Choose **Thick paper** mode in the printer driver or in the machine's Paper Type menu setting, or use thinner paper than you are currently using. (See *Paper type* on page 22 and *Basic tab in the Software User's Guide on the CD-ROM*.) ■ Change the paper to fresh, unopened paper. ■ Check the machine's environment. Conditions such as high humidity can cause hollow print. (See *Choosing a location* on page 98.) ■ Clean all four corona wires (one for each colour) of the drum unit by sliding the green tab. (See *Cleaning the corona wires* on page 155.) If the print quality has not improved, put in a new drum unit. (See *Replacing the drum unit* on page 174.) ■ Clean the drum unit. (See *Cleaning the drum unit* on page 159.)
Completely blank or some colours are missing. 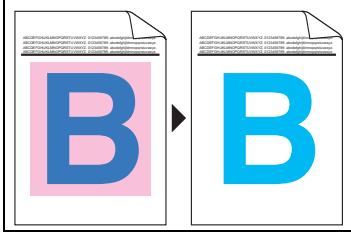	■ Make sure that the toner cartridges are installed properly. (See *Replacing a toner cartridge* on page 169.) ■ One of the toner cartridges may be damaged. Identify the missing colour and put in a new toner cartridge for the colour with the white line. (See *Replacing a toner cartridge* on page 169.) ■ The drum unit may be damaged. Put in a new drum unit. (See *Replacing the drum unit* on page 174.)

Examples of poor print quality	Recommendation
Coloured spots at 75 mm 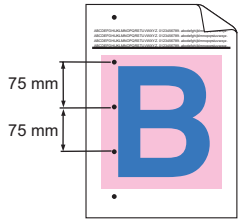	■ Dust, paper powder, glue, and so on may stick to the surface of the photosensitive drum (OPC) and cause black or white spots to appear on printed documents. ■ Make a few copies of a blank, white sheet of paper. (See *Making multiple copies* on page 78.) ■ If you still see the spots on printed documents after making multiple copies, clean the drum unit (See *Cleaning the drum unit* on page 159.) ■ If the print quality still has not improved you need to install a new drum. (See *Replacing the drum unit* on page 174.)
Toner scatter or toner stain 	■ Check the machine's environment. Conditions such as high humidity and high temperatures may cause this print quality problem. (See *Choosing a location* on page 98.) ■ Make sure that you use paper that meets our specifications. Rough-surfaced paper may cause the problem. (See *Acceptable paper and other media* on page 11.) ■ Install a new toner cartridge for the colour causing the problem. (See *Replacing a toner cartridge* on page 169.) ■ Clean the corona wires and the drum unit for the colour causing the problem. (See *Cleaning the corona wires* on page 155 and *Cleaning the drum unit* on page 159.) If the print quality has not improved, put in a new drum unit. (See *Replacing the drum unit* on page 174.)
Grey or coloured background 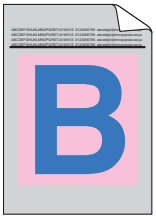	■ Make sure that you use paper that meets our specifications. (See *Acceptable paper and other media* on page 11.) ■ Check the machine's environment. Conditions such as high temperatures and high humidity can increase the amount of background shading. (See *Choosing a location* on page 98.) ■ Install a new toner cartridge for the colour causing the problem. (See *Replacing a toner cartridge* on page 169.) ■ Clean the corona wires of the drum unit for the colour causing the problem. (See *Cleaning the corona wires* on page 155.) If the print quality has not improved, put in a new drum unit. (See *Replacing the drum unit* on page 174.)
Page skewed 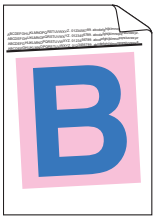	■ Make sure the paper or other print media is loaded properly in the paper tray and that the guides are not too tight or too loose against the paper stack. ■ Set the paper guides correctly. ■ The paper tray may be too full. ■ Make sure that you use paper that meets our specifications. (See *Acceptable paper and other media* on page 11.)

Examples of poor print quality	Recommendation
Ghost 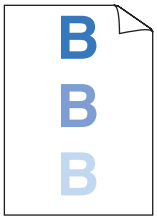 	■ Make sure that you use paper that meets our specifications. Rough-surfaced paper or thick paper may cause the problem. (See *Acceptable paper and other media* on page 11.) ■ Make sure that you choose the correct media type in the printer driver or in the machine's Paper Type menu setting. (See *Acceptable paper and other media* on page 11 and *Basic tab in the Software User's Guide on the CD-ROM*.) ■ The drum unit may be damaged. Put in a new drum unit. (See *Replacing the drum unit* on page 174.)
The colour of your printouts are not what you expected.	■ Make sure that the toner cartridges are installed properly. (See *Replacing a toner cartridge* on page 169.) ■ Make sure that the toner cartridges are not empty. (See *Toner life end message* on page 169.) ■ Make sure that the drum unit is installed properly. (See *Replacing the drum unit* on page 174.) ■ Make sure that the belt unit is installed properly. (See *Replacing the belt unit* on page 181.) ■ Perform the calibration by using the control panel. Press **Menu**, **4**, **6**. 1 Press **OK** to select `Calibrate`. 2 Press **1** to select `Yes`. (For more information, see *Software User's Guide on the CD-ROM.)* ■ Adjust the colour by using the custom setting in the printer driver. Colours the machine can print and colours you see on a monitor are different. The machine may not be able to reproduce the colours on your monitor. ■ Make sure that you use paper that meets our specifications. (See *Acceptable paper and other media* on page 11.) ■ The drum unit may be damaged. Put in a new drum unit. (See *Replacing the drum unit* on page 174.) ■ Put in a new belt unit. (See *Replacing the belt unit* on page 181.)
All one colour	■ Clean the corona wires of the drum unit for the colour causing the problem. (See *Cleaning the corona wires* on page 155.) If the print quality has not improved, put in a new drum unit. (See *Replacing the drum unit* on page 174.) ■ The drum unit may be damaged. Put in a new drum unit. (See *Replacing the drum unit* on page 174.)

Examples of poor print quality	Recommendation
Colour misregistration 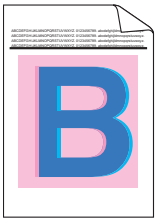	■ Make sure that the drum unit is installed properly. (See *Replacing the drum unit* on page 174.) ■ Make sure that the belt unit is installed properly. (See *Replacing the belt unit* on page 181.) ■ Make sure that the waste toner box is installed properly. (See *Replacing the waste toner box* on page 186.) ■ Perform the auto colour registration by using the control panel. Press **Menu**, **4**, **7**, **1**. or ■ Perform the manual colour registration by using the control panel. 1 Print the correction chart by using the control panel. Press **Menu**, **4**, **8**, **1**. 2 Enter the correction value on the chart. Press **Menu**, **4**, **8**, **2**. If the colour misregistration is not corrected after registering the colour manually, take all the toner cartridges out of the drum unit and turn the drum unit over, then make sure that four drum unit gears are in the home position. The home position of each drum can be identified by matching the number on the drum unit gear to the same number on the side of the drum unit as shown in the illustration. 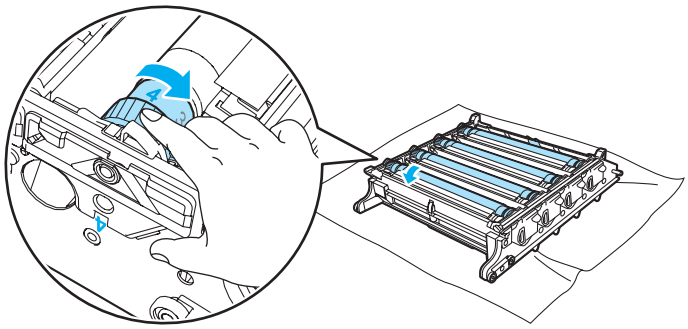 ■ The drum unit may be damaged. Put in a new drum unit. (See *Replacing the drum unit* on page 174.) ■ Put in a new belt unit. (See *Replacing the belt unit* on page 181.) ■ Put in a new waste toner box. (See *Replacing the waste toner box* on page 186.) ■ If solid areas of colour or images have cyan, magenta or yellow fringes, you can use the auto-registration feature to correct the problem.

Examples of poor print quality	Recommendation
Uneven density appears periodically across the page 	■ Identify the colour that is uneven and put in a new toner cartridge for that colour. (See *Replacing a toner cartridge* on page 169.) ■ The drum unit may be damaged. Put in a new drum unit. (See *Replacing the drum unit* on page 174.) ■ Make sure that the fuser unit is installed properly.
Missing image at edge	■ Make sure that the toner cartridges are installed properly. (See *Replacing a toner cartridge* on page 169.) ■ Make sure that the drum unit is installed properly. (See *Replacing the drum unit* on page 174.) ■ One of the toner cartridges may be damaged. Identify the missing colour and put in a new toner cartridge for the colour with the white line. (See *Replacing a toner cartridge* on page 169.) ■ The drum unit may be damaged. Put in a new drum unit. (See *Replacing the drum unit* on page 174.)
Missing image at thin line	■ If you are using a Windows® printer driver, open **Properties** window, and then click **Printing Preferences**. Choose the **Advanced** tab, **Device Option**, **Print Setting**, and then check the **Improve pattern printing** or **Improve Thin Line** boxes.
Wrinkle 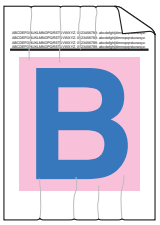	■ Change to the recommended type of paper. (See *Recommended paper* on page 11.) ■ Check the paper type and quality. (See *Acceptable paper and other media* on page 11.) ■ Make sure that the back cover is closed properly. ■ Make sure that paper is loaded properly. ■ Make sure that you choose the correct media type in the printer driver or in the machine's Paper Type menu setting. (See *Acceptable paper and other media* on page 11 and *Basic tab in the Software User's Guide on the CD-ROM*.) ■ Turn over the stack of paper in the tray or rotate the paper 180° in the input tray. ■ Make sure that the drum unit is installed properly. (See *Replacing the drum unit* on page 174.) ■ Make sure that the fuser unit is installed properly. ■ If the problem continues, call your Brother dealer.
Insufficient gloss	■ Change to the recommended type of paper. (See *Recommended paper* on page 11.)

Examples of poor print quality	Recommendation
Offset image 	■ Check the machine's environment. Conditions such as high temperatures and humidity can cause this problem. (See *Choosing a location* on page 98.) ■ Make sure that you use paper that meets our specifications. (See *Acceptable paper and other media* on page 11.) ■ Make sure that you choose the correct media type in the printer driver or in the machine's Paper Type menu setting. (See *Acceptable paper and other media* on page 11 and *Basic tab in the Software User's Guide on the CD-ROM*.) ■ Change to the recommended type of paper. (See *Recommended paper* on page 11.) ■ The drum unit may be damaged. Put in a new drum unit. (See *Replacing the drum unit* on page 174.)
Poor fixing 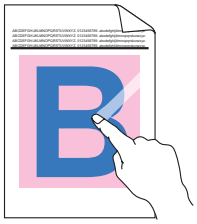	■ Make sure that you use paper that meets our specifications. (See *Acceptable paper and other media* on page 11.) ■ Make sure that you choose the correct media type in the printer driver or in the machine's Paper Type menu setting. (See *Acceptable paper and other media* on page 11 and *Basic tab in the Software User's Guide on the CD-ROM*.) ■ Make sure that the release lever of the fuser unit is in the closed position. ■ If the problem continues, call your Brother dealer.
Poor fixing when printed on thick paper	■ Choose **Thick paper** mode in the printer driver or in the machine's Paper Type menu setting. (See *Paper type* on page 22 and *Basic tab in the Software User's Guide on the CD-ROM*.) ■ Make sure that you use paper that meets our specifications. (See *Acceptable paper and other media* on page 11.)

Examples of poor print quality	Recommendation
Curled or wave 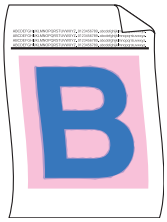	■ Make sure that you choose the correct media type in the printer driver or in the machine's Paper Type menu setting. (See *Acceptable paper and other media* on page 11 and *Basic tab in the Software User's Guide on the CD-ROM*.) ■ Check the paper type and quality. High temperatures and high humidity will cause paper to curl. ■ If you do not use the machine often, the paper may have been in the paper tray too long. Turn over the stack of paper in the paper tray. Also, fan the paper stack and then rotate the paper 180° in the paper tray. ■ Follow these steps: 1 Open the back cover. 2 Push the grey lever to the right as shown below. 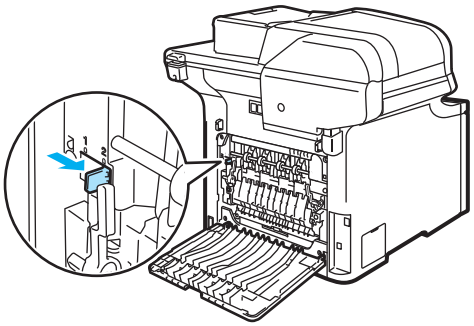 3 Close the back cover and re-send the print job. **Note** When you have finished printing, open the back cover and reset the lever back to the original position.

Examples of poor print quality	Recommendation
Envelope creases 	1 Open the back cover. 2 Pull down the two grey levers, one on the left-hand side and one on the right-hand side to the envelope position, as shown in the illustration below. 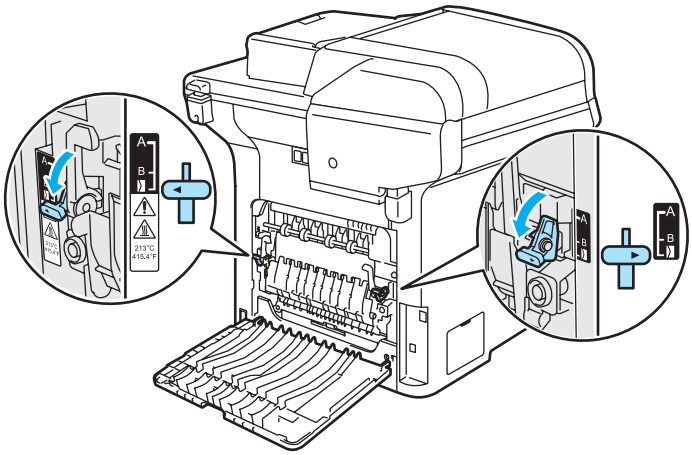 3 Close the back cover and re-send the print job. **Note** When you have finished printing, open the back cover and reset the two grey levers back to the original position.

Examples of poor print quality	Recommendation
White lines or ribbing down the page on duplex print **Note** Position B is only for duplex printing with recycled paper when the temperature and humidity are low.	■ Choose **Thin Paper** mode in the printer driver and re-send the print job. If the problem is not solved after printing a few pages, follow these steps: 1 Open the back cover. 2 Pull down the two grey levers, one on the left-hand side and one on the right-hand side, to position B as shown in the illustration below. 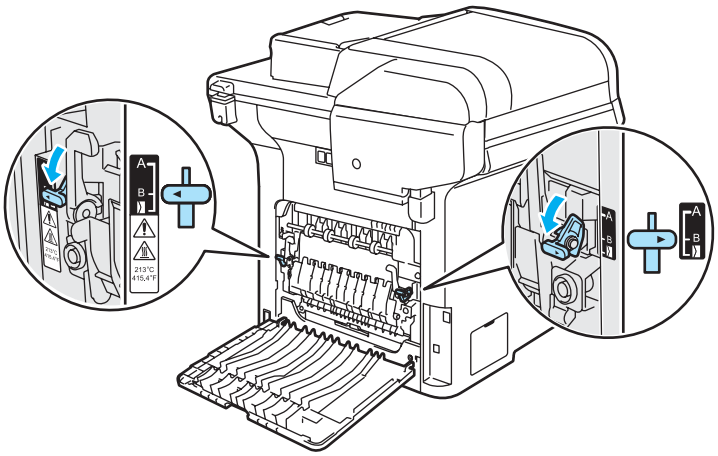 3 Close the back cover. 4 Choose **Plain Paper** mode in the printer driver and re-send the print job. 5 If the problem is not solved after printing a few pages, choose **Thin Paper** mode in the printer driver and re-send the print job. **Note** When you have finished printing, open the back cover and reset the two grey levers back to the original position. ■ Use thicker paper than you are now using.

Examples of poor print quality	Recommendation
Toner scatter or toner stain on the edge of duplex pages 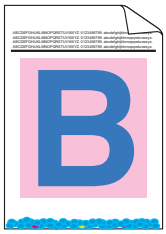	**CAUTION** We recommend that you place the drum unit and toner cartridges on a clean, flat surface with a piece of disposable paper underneath them in case you accidentally spill or scatter toner. DO NOT touch the surface of the photosensitive drum. Take all the toner cartridges out of the drum unit and turn the drum unit over. Wipe the toner on the edge of drum unit with a dry lint free soft cloth as shown in the illustration. 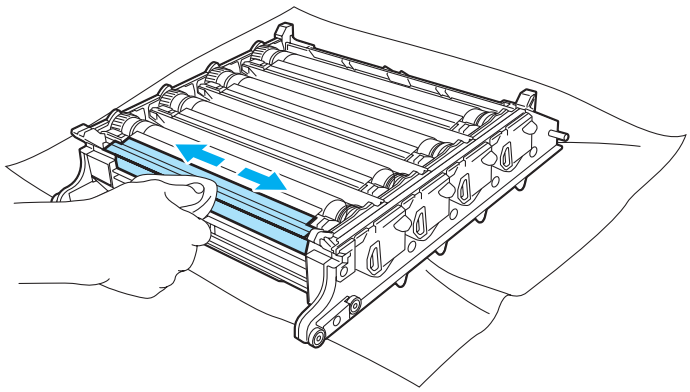

Setting dial tone detection

When you send a fax automatically, by default your machine will wait for a fixed amount of time before it starts to dial the number. By changing the Dial Tone setting to `Detection` you can make your machine dial as soon as it detects a dial tone. This setting can save a small amount of time when sending a fax to many different numbers. If you change the setting and start having problems with dialling you should change back to the default `No Detection` setting.

1. Press **Menu**, **0**, **5**.

```
05.Dial Tone
▲    Detection
▼    No Detection
Select ▲▼ or OK
```

2. Press ▲ or ▼ to choose `Detection` or `No Detection`.
   Press **OK**.

3. Press **Stop/Exit**.

Telephone line interference

If you are having difficulty sending or receiving a fax due to possible interference on the telephone line, you can reduce the fax speed to minimise errors.

1. Press **Menu**, **2**, **0**, **1**.

```
20.Miscellaneous
  1.Compatibility
▲    High
▼    Normal
Select ▲▼ or OK
```

2. Press ▲ or ▼ to choose `Basic(for VoIP)` or `Normal` (or `High`).

   - `Basic(for VoIP)` cuts the modem speed to 9600 bps. and turns the error correction mode (ECM) off.

     For a standard telephone line: If you regularly experience interference on your standard telephone line try this setting.

     If you are using VoIP: VoIP service providers offer fax support using various standards. If you regularly experience fax transmission errors try this setting.

   - `Normal` sets the modem speed at 14400 bps.

   - `High` sets the modem speed at 33600 bps.

   Press **OK**.

3. Press **Stop/Exit**.

Note

When you change the compatibility to `Basic(for VoIP)`, the ECM feature is only available for colour fax sending.

Error and maintenance messages

As with any sophisticated office product, error and maintenance messages may be displayed. The most common error and maintenance messages are shown below.

Error Message	Cause	Action
Access Error	The device is removed from the USB direct interface while the data is processing.	Press **Stop/Exit**. Reinsert the device and try to print with direct print or PictBridge.
BT Call Sign On (U.K. only)	BT Call Sign is set to On. You cannot change the Receive Mode from Manual to another mode.	Set BT Call Sign to Off. (See *BT call sign (U.K. only)* on page 51.)
Calibrate	Calibration failed.	Press **Mono Start** or **Colour Start** and try it again. Do one of the following: ■ Turn off the machine's power switch. Wait a few seconds, then turn it on again. ■ Put in a new drum unit. (See *Replacing the drum unit* on page 175.) ■ Put in a new belt unit. (See *Replacing the belt unit* on page 181.) ■ Put in a new waste toner box. (See *Replacing the waste toner box* on page 186.) ■ If the problem continues, call your Brother dealer.
Cartridge Error Put the Black (K) Toner Cartridge back in. [1] [1] The toner cartridge colour with the problem is shown in the message.	The toner cartridge is not installed properly.	Pull out the drum unit, take out the toner cartridge that is indicated on the LCD, and put it back into the drum unit again.
Change Parts Belt Unit	It is time to replace the belt unit.	Replace the belt unit. (See *Replacing the belt unit* on page 181.)
Change Parts Drum	The drum unit is near the end of its life.	Use the drum unit until you have a print quality problem; then replace the drum unit with a new one.
	The drum unit counter was not reset when a new drum was installed.	Press **Menu**, **8**, **4**, and then ▲ or ▼ to choose Drum. Press **OK** and press **1** to reset the drum unit counter.

Error Message	Cause	Action
Change Parts Fuser Unit	It is time to replace the fuser unit.	Call your Brother dealer to purchase the fuser unit.
Change Parts Laser Unit	It is time to replace the laser unit.	Call your Brother dealer to purchase the laser unit.
Change Parts PF kit MP	It is time to replace the paper feeding kit for the MP tray.	Call your Brother dealer to purchase the PF Kit MP.
Change Parts PF kit 1	It is time to replace the paper feeding kit for Tray 1.	Call your Brother dealer to purchase the PF Kit 1.
Change Parts PF kit 2	It is time to replace the paper feeding kit for Tray 2.	Call your Brother dealer to purchase the PF Kit 2.
Change Parts Waste Toner Box	The waste toner box is almost full.	Be ready to replace the waste toner box. (See *Replacing the waste toner box* on page 186.)
Check Paper Size	The paper in the tray is not the correct size.	Load the correct size of paper in the tray and set the “Paper Size” (**Menu**, **1**, **3**) and “Tray Use” (**Menu**, **1**, **7**). (See *Paper size* on page 23, *Tray use in copy mode* on page 23, *Tray use in fax mode* on page 24 and *Tray use in print mode* on page 24.)
Comm.Error	Poor telephone line quality caused a communication error.	Try sending the fax again or try connecting the machine to another telephone line. If the problem continues, call the telephone company and ask them to check your telephone line.
Connection Fail	You tried to poll a fax machine that is not in Polled Waiting mode.	Check the other fax machine’s polling setup.
Cooling Down Wait for a while	The temperature of the drum unit or toner cartridge is too hot. The machine will pause its current print job and go into cooling down mode. During the cooling down mode, you will hear the cooling fan running while the LCD shows Cooling Down, and Wait for a while.	Make sure that you can hear the fan in the machine spinning and that the exhaust outlet isn't blocked by something. If the fan is spinning, remove any obstacles that surround the exhaust outlet, and then leave the machine turned on but do not use it for several minutes. If the fan is not spinning follow the suggestions below. Turn off the machine's power switch and then turn it on again. If the error message continues leave the machine for several minutes and then try it again. (The machine can be turned off for up to 60 hours without losing faxes stored in the memory.)
Cover is Open Close the Front Cover.	The front cover is not closed completely.	Close the front cover of the machine.

Error Message	Cause	Action
Cover is Open Close the Back Cover.	The back cover is not closed completely.	Close the back cover of the machine.
Disconnected	The other person or other person's fax machine stopped the call.	Try to send or receive again.
Document Jam	The document was not inserted or fed properly, or the document scanned from the ADF was too long.	See *Document jams* on page 138 or *Using the ADF (automatic document feeder)* on page 20.
Drum Error	The corona wires on the drum unit needs to be cleaned.	Clean the four corona wires on the drum unit. (See *Cleaning the corona wires* on page 155.)
EL Error	The machine has a mechanical problem.	Open the front cover and close it again.
Fuser Error	The temperature of fuser unit does not rise at a specified temperature within specified time.	Turn the power switch off, wait a few seconds, and then turn it on again. Leave the machine for 15 minutes with the power on. The machine can be turned off for up to 60 hours without losing faxes stored in the memory. (See *Checking if the machine has faxes in its memory* on page 137.)
	The fuser unit is too hot.	
Init Unable XX	The machine has a mechanical problem.	Turn off the machine's power switch and then turn it on again. If the error message continues leave the machine for several minutes and then try to print, copy or scan again. The machine can be turned off for up to 60 hours without losing faxes stored in the memory. (See *Checking if the machine has faxes in its memory* on page 137.)
Jam Duplex	The paper is jammed in the duplex tray.	(See *Paper jams* on page 139.)
Jam Rear	The paper is jammed in the back of the machine.	(See *Paper jams* on page 139.)
Jam Inside	The paper is jammed inside the machine.	(See *Paper jams* on page 139.)
Jam MP Tray	The paper is jammed in the MP tray of the machine.	(See *Paper jams* on page 139.)
Jam Tray 1 Jam Tray 2	The paper is jammed in the paper tray of the machine.	(See *Paper jams* on page 139.)
Low Temperature	The temperature of the machine is too cold.	Increase room temperature to allow the machine to operate.
No Belt Unit	The belt unit is not installed.	Install the belt unit. (See *Replacing the belt unit* on page 181.)
No Drum Unit	The drum unit is not installed.	Install the drum unit. (See *Replacing the drum unit* on page 174.)

Error Message	Cause	Action
No Paper	The machine is out of paper or paper is not properly loaded in the paper tray.	Do one of the following: ■ Refill the paper in the paper tray or MP tray. ■ Remove the paper and load it again.
No Response/Busy	The number you dialled does not answer or is busy.	Verify the number and try again.
No Tray	The paper tray is not completely closed.	Close the paper tray properly.
No Waste Toner	The waste toner box is not installed.	Install the waste toner box. (See *Replacing the waste toner box* on page 186.)
Not Registered	You tried to access a One-Touch or Speed Dial number that is not programmed.	Set up the One-Touch or Speed Dial number. (See *Storing one-touch dial numbers* on page 59 and *Storing speed-dial numbers* on page 60.)
Out of Memory	The machine's memory is full.	**Fax sending or copy operation in progress** Do one of the following: ■ Press **Mono Start** or **Colour Start** to send or copy the scanned pages. ■ Press **Stop/Exit** and wait until the other operations in progress finish, and then try again. ■ Clear the data from the memory. (See *Out of memory message* on page 43 or page 85.) **Print operation in process** Do one of the following: ■ Reduce print resolution. (See *Advanced tab in the Software User's Guide on the CD-ROM*.) ■ Clear the faxes from the memory. (See *Out of memory message* on page 85.)
Print Unable XX	The machine has a mechanical problem.	Turn off the machine's power switch and then turn it on again. If the error message continues leave the machine for several minutes and then try to print, copy or scan again. The machine can be turned off for up to 60 hours without losing faxes stored in the memory. (See *Checking if the machine has faxes in its memory* on page 137.)
Protected Device	The protect switch of the USB flash memory drive is On.	Turn off the protect switch of the USB flash memory drive.

Error Message	Cause	Action
Registration	Registration failed.	Press **Mono Start** or **Colour Start** and try again. Do one of the following: ■ Try Manual Registration, **Menu**, **4**, **8**. (See *Manual Registration in the Software User's Guide on the CD-ROM*.) ■ Put in a new belt unit. (See *Replacing the belt unit* on page 181.) ■ Put in a new drum unit. (See *Cleaning the drum unit* on page 159.) ■ Replace the empty toner cartridge with a new one. (See *Replacing a toner cartridge* on page 169.) ■ Turn off the machine's power switch. Wait a few seconds, then turn it on again. ■ If the problem continues, call your Brother dealer.
Rename the File	There is already a file on the USB flash memory drive with the same name as the file you are trying to save.	Change the file name of the file on the USB flash memory drive or the file you are trying to save.
Scan Unable XX	The machine has a mechanical problem.	Turn off the machine's power switch and then turn it on again. If the error message continues leave the machine for several minutes before you try it again. The machine can be turned off for up to 60 hours without losing faxes stored in the memory. (See *Checking if the machine has faxes in its memory* on page 137.)
	Document is too long for duplex scanning.	Press **Stop/Exit**. Use a suitable size of paper for duplex scanning. (See *Scan* on page 227.)
Scanner Locked	The scanner lock is locked.	Open the document cover, and then release the scanner lock lever. Press **Stop/Exit**.
Toner Life End Replace Black(K) Toner Cartridge. [1] [1] The toner cartridge colour which is used up is shown in the message.	The drum unit and toner cartridges assembly is not installed properly, or one or more of the toner cartridges are used up and printing is not possible.	Do one of the following: ■ Re-install the toner cartridges and drum unit assembly. ■ Replace the empty toner cartridge with a new one. (See *Replacing a toner cartridge* on page 169.) ■ If one of the colour toner cartridges is empty, choose **Mono** in the printer driver to be able to continue printing in monochrome.

Error Message	Cause	Action
Toner Low Prepare New Black(K) Toner Cartridge. [1] [1] The toner cartridge colour which is near the end of life is shown in the message.	If the LCD shows Toner Low, you can still print; however, the machine is telling you that the toner cartridge is near the end of its life and the toner will soon run out.	Order a new toner cartridge now for the toner cartridge colour that is low.
Too Many Files	There are too many files stored on the USB flash memory drive.	Reduce the number of files stored on the USB flash memory drive.
Unusable Device	An incompatible or broken device has been connected to the USB direct interface.	Remove the device from the USB direct interface. Turn off the machine's power switch, wait a few seconds and turn it on again.
Waste Toner Full	It is time to replace the waste toner box.	Replace the waste toner box. (See *Replacing the waste toner box* on page 186.)
Wrong Paper Size	The paper in the tray is not the correct size or the tray is empty.	Load the correct size of paper in the tray.

Checking if the machine has faxes in its memory

If the LCD shows an error message then you can check to see if there are faxes in the machine's memory.

1. Press **Menu**, **9**, **0**, **1**.
2. Do one of the following:
   - If the LCD shows `No Data`, there are no faxes left in the machine's memory.
     Press **Stop/Exit**.
   - If the LCD shows `Dial & Start`, there are faxes in the machine's memory.
     - You can send the faxes to another fax machine. (See *Transferring faxes to another fax machine* on page 137.)
     - You can send the faxes from the machine's memory to your PC. (See *Transferring faxes to your PC* on page 137.)

Note

You can send the Fax Journal report to another fax machine by pressing **Menu**, **9**, **0**, **2** in ❶.

Transferring faxes to another fax machine

If you have not set up your Station ID, you cannot enter fax transfer mode.

1. Follow ❶ and ❷ in *Checking if the machine has faxes in its memory* on page 137.
2. Enter the fax number to which faxes will be sent.
3. Press **Mono Start** or **Colour Start**.

Transferring faxes to your PC

You can move the faxes from your machine's memory to your PC.

1. If you have followed ❶ and ❷ in *Checking if the machine has faxes in its memory* on page 137, press **Stop/Exit**.
2. Make sure that you have installed **MFL-Pro Suite** on your PC, and then turn on **PC-FAX Receiving** on the PC. (For details about PC Fax Receive, see *PC-FAX receiving in the Software User's Guide on the CD-ROM*.)
3. Make sure that you have set `PC Fax Receive` on the machine. (See *PC fax receive* on page 65.) During setup the LCD will ask if you want to send the faxes to your PC.
4. Do one of the following:
   - To send all faxes to your PC, press **1**.
   - To exit and leave the faxes in the memory, press **2**.
5. The LCD will ask you the following message:

   ```
   25.Remote Fax Opt
     Backup Print
   ▲   Off
   ▼   On
   Select ▲▼ or OK
   ```

   Press ▲ or ▼ to choose `On` or `Off`.
   Press **OK**.
6. Press **Stop/Exit**.

C

Note

If there is an error message on the machine's LCD after the faxes have been sent, disconnect the machine from the power source for several minutes, and then reconnect it.
If you choose Backup Print On, the machine will also print the fax at your machine so you will have a copy. This is a safety feature in case there is a power failure before the fax is forwarded or a problem at the receiving machine. The machine can store faxes up to 60 hours if there is a power failure.

Document jams

If the document is jammed, follow the steps below.

Document is jammed in the top of the ADF unit

The document may get jammed if it is not inserted or fed properly, or if it is too long. Follow the steps below to clear a document jam.

1. Take out any paper from the ADF that is not jammed.
2. Open the ADF cover.
3. Pull the jammed document out to the left.

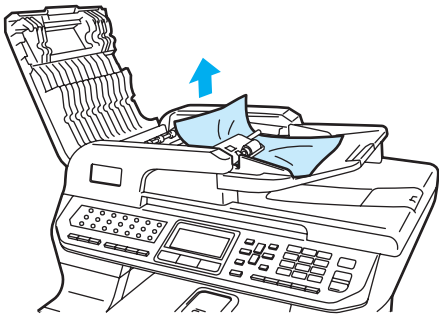

4. Close the ADF cover.
5. Press **Stop/Exit**.

Document is jammed under the document cover

1. Take out any paper from the ADF that is not jammed.
2. Lift the document cover.
3. Pull the jammed document out to the right.

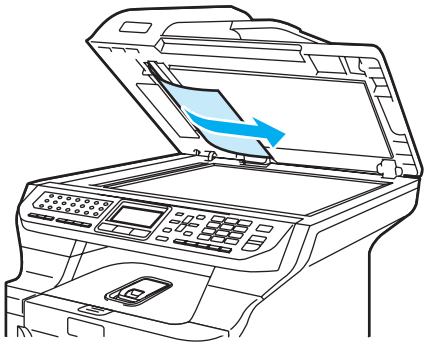

4. Close the document cover.
5. Press **Stop/Exit**.

Document is jammed at the output tray

1. Take out any paper from the ADF that is not jammed.
2. Pull the jammed document out to the right.

3. Press **Stop/Exit**.

Document is jammed in the duplex slot

1. Take out any paper from the ADF that is not jammed.
2. Pull the jammed document out to the right.

3. Press **Stop/Exit**.

Paper jams

To clear paper jams, please follow the steps in this section.

HOT SURFACE

After you have just used the machine, some internal parts of the machine will be extremely hot. When you open the front or back cover of the machine, DO NOT touch the shaded parts shown in the illustration.

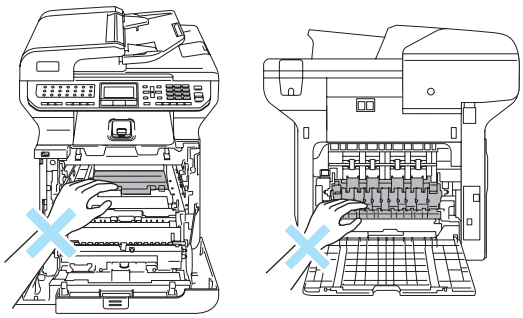

Note

The LCD names for the paper trays are as follows:

- Standard paper tray: `Tray 1`
- Optional lower tray: `Tray 2`
- Multi-purpose tray: `MP Tray`

Paper is jammed in the MP tray

If the LCD shows `Jam MP Tray`, follow these steps:

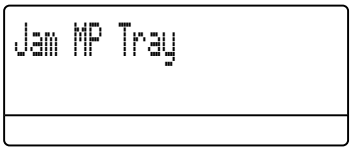

1. Remove the paper from the MP tray.
2. Remove any jammed paper from in and around the MP tray.

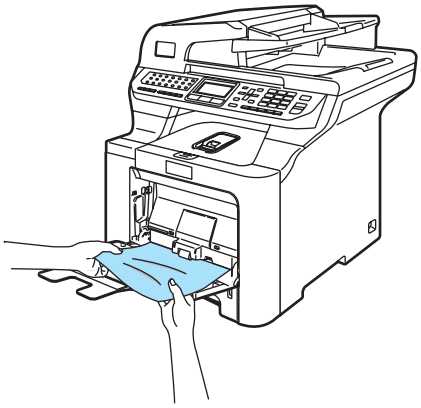

3. Close the MP tray. Then, open the front cover and close it to reset the machine. Open the MP tray again.

4 Fan the paper stack, and then put it back in the MP tray.

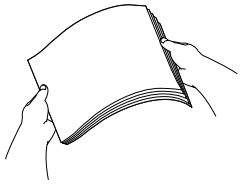

5 When loading paper in the MP tray, make sure that the paper stays under the maximum paper height guides on both sides of the tray.

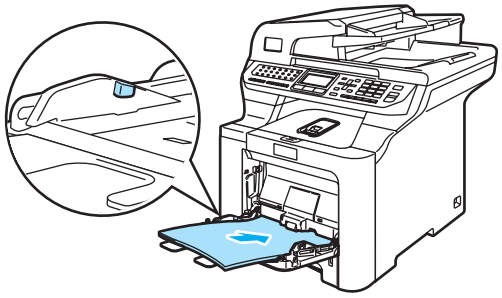

Paper is jammed in Paper Tray 1 or Tray 2

If the LCD shows `Jam Tray 1` or `Jam Tray 2`, follow these steps.

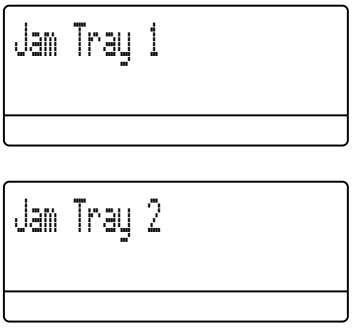

1 Pull the paper tray completely out of the machine.

For `Jam Tray 1`:

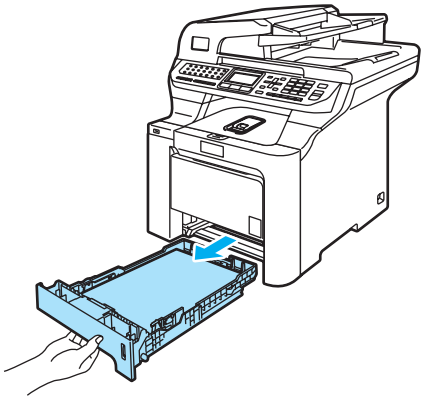

For `Jam Tray 2`:

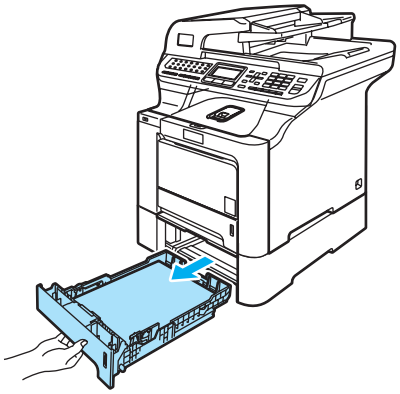

2 Use both hands to slowly pull out the jammed paper.

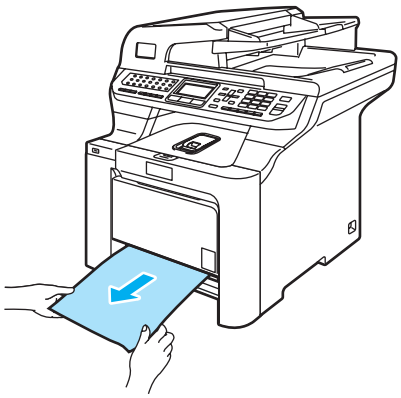

3 Make sure the paper is below the maximum paper mark. While pressing the green paper-guides release lever, slide the paper guides to fit the paper size. Make sure that the guides are firmly in the slots.

4 Put the paper tray firmly back in the machine.

Paper is jammed inside the machine

If the LCD shows `Jam Inside`, follow these steps:

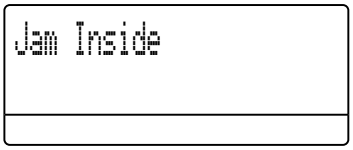

1 Pull the paper tray completely out of the machine.

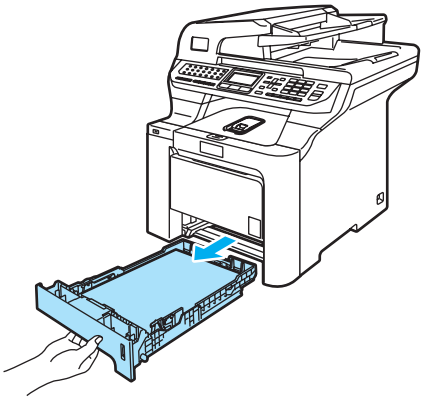

2 Use both hands to slowly pull out the jammed paper.

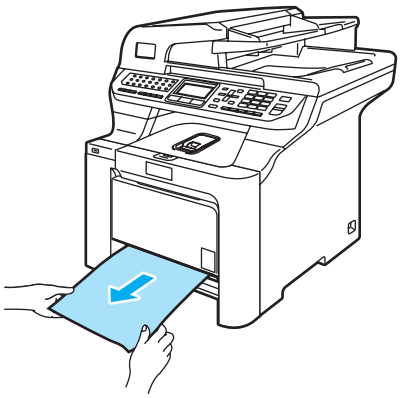

3 Press the front cover release button and then open the front cover.

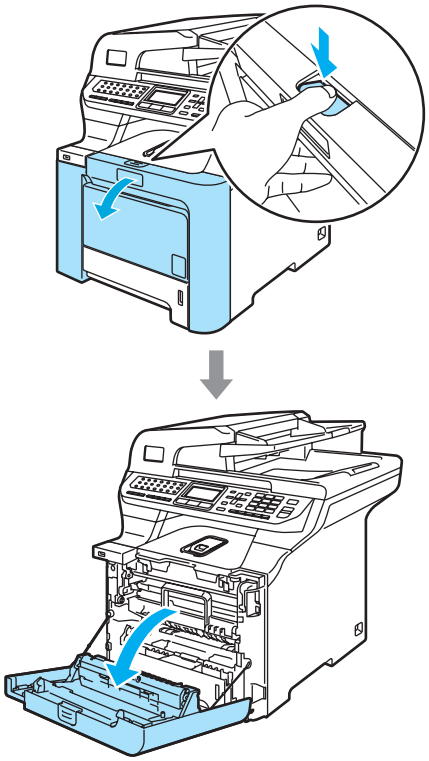

4 Hold the green handle of the drum unit. Lift the drum unit up and then pull it out until it stops.

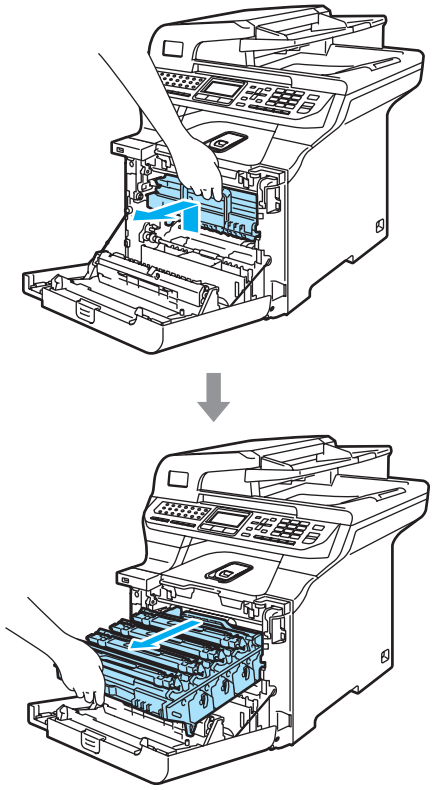

5 Release the grey lock lever (1) that is on the left side of the machine. Lift the front of the drum unit up and pull the drum unit completely out of the machine using the green handles on the drum unit.

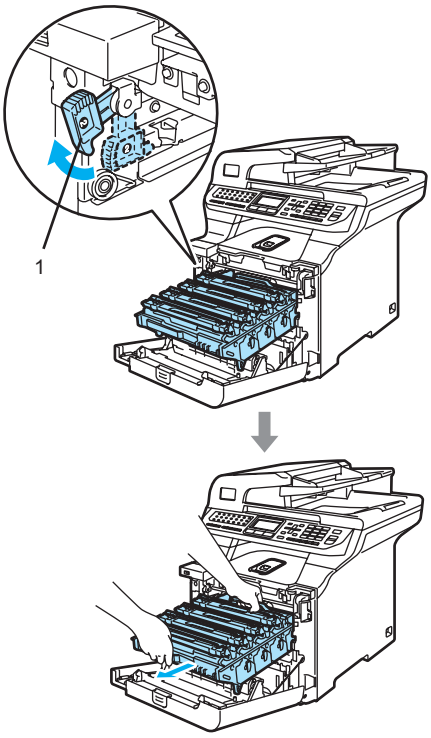

CAUTION

Make sure that you use the drum unit handles when carrying it. DO NOT hold the sides of the drum unit.

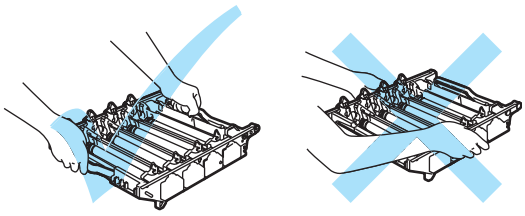

We recommend that you put the drum unit on a flat surface protected by a piece of disposable paper or cloth in case of toner scatter or spillage.

To prevent damage to the machine from static electricity, DO NOT touch the electrodes shown in the illustration.

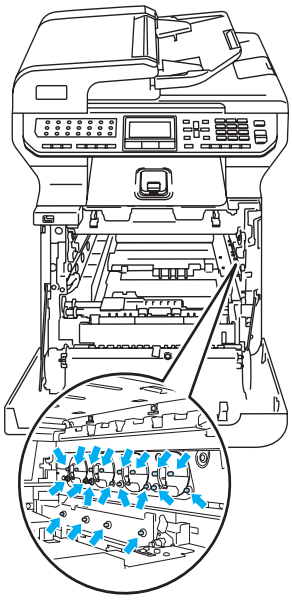

6 The jammed paper may be pulled out with the toner cartridge and drum unit assembly, or this may release the paper so you can pull it out of the paper tray opening.

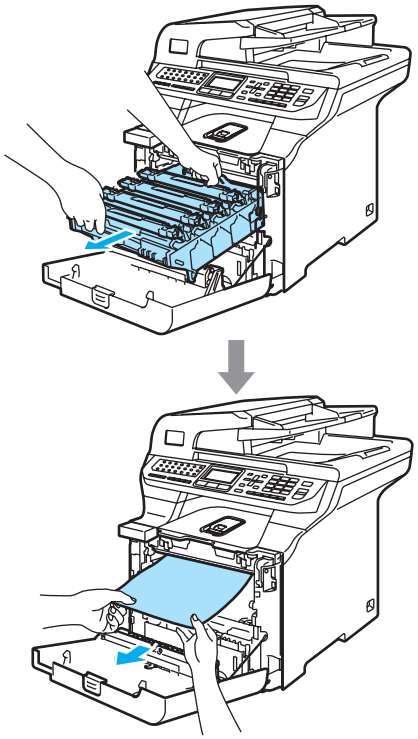

C

7 Put the drum unit back in the machine as follows.

1 Make sure that the grey lock lever (1) is in the up position and put the drum unit in the machine. Push down the grey lock lever (1).

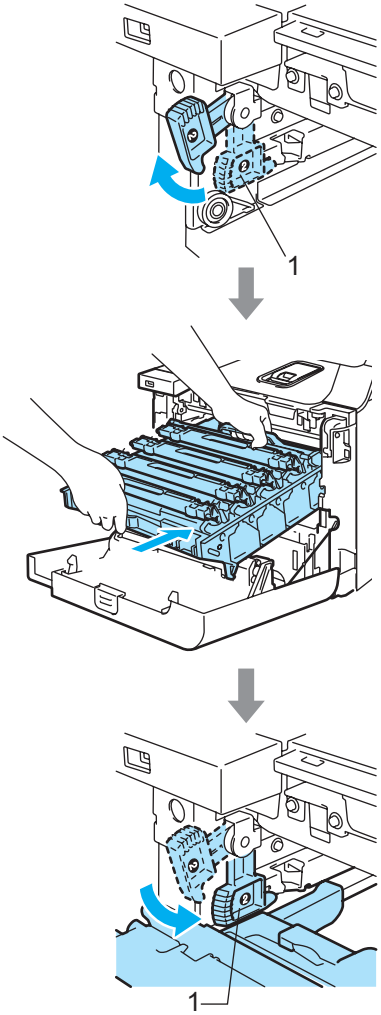

Note

When you put the drum unit in the machine, match the green guides (1) of the drum unit handle to the green arrows (2) on both sides of the machine.

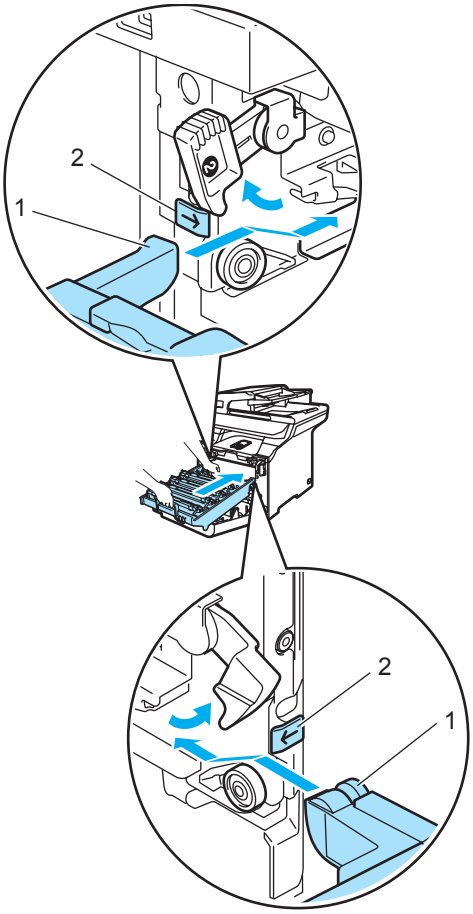

2 Push the drum unit in until it stops.

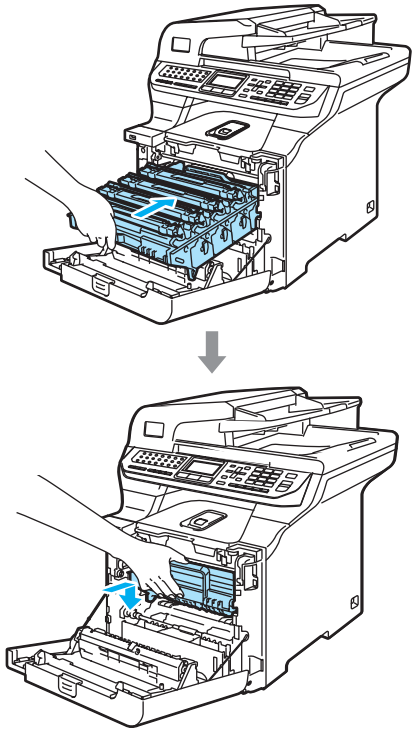

8 Close the front cover of the machine.

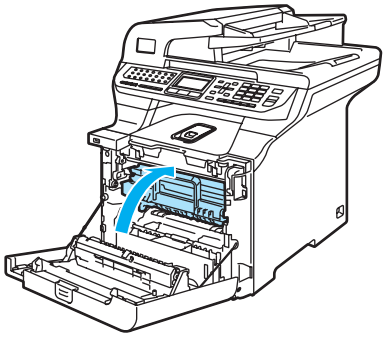

9 Put the paper tray firmly back in the machine.

Paper is jammed at the back of the machine

If the LCD shows `Jam Rear`, follow these steps:

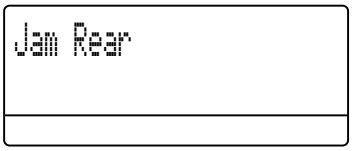

1 Press the cover release lever to open the front cover.

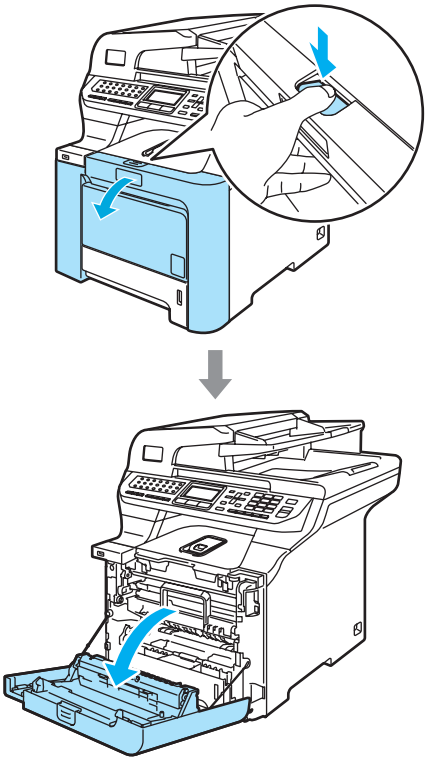

C

2 Hold the green handle of the drum unit. Lift the drum unit up and then pull it out until it stops.

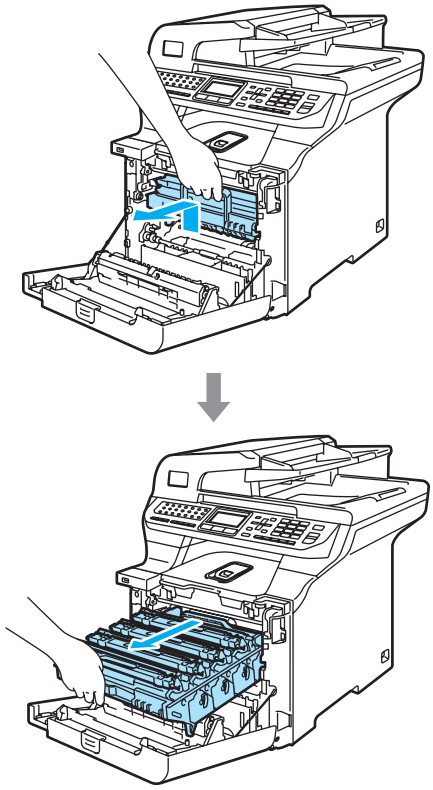

3 Open the back cover.

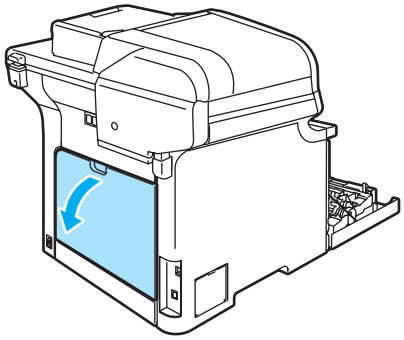

4 Pull down the two green levers, one on the left-hand-side and one on the right-hand-side, as shown in the illustration below, and then fold down the fuser cover (1).

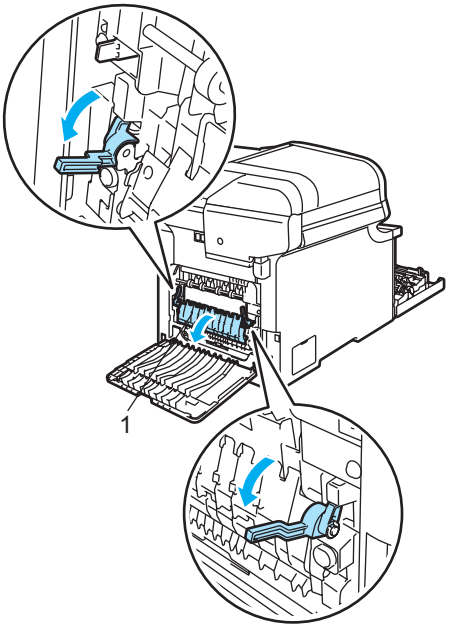

HOT SURFACE

After you have just used the machine, some internal parts of the machine will be extremely hot. When you open the front or back cover of the machine, DO NOT touch the shaded parts shown in the illustration.

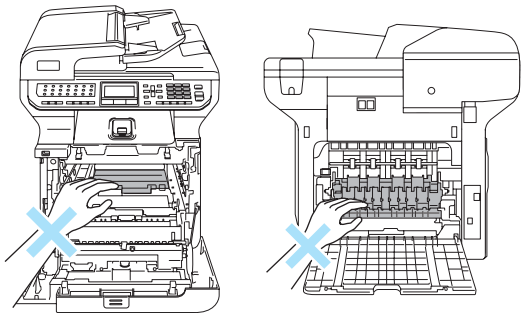

5 Using both hands, gently pull the jammed paper out of the fuser unit.

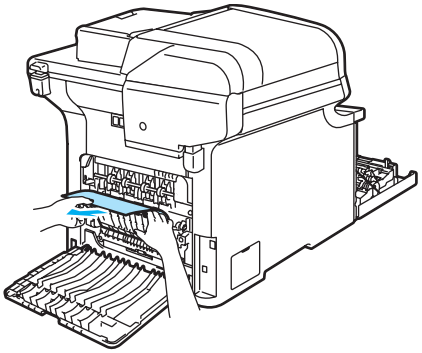

6 Close the fuser cover (1) and lift the two green levers at the left and right hand sides.

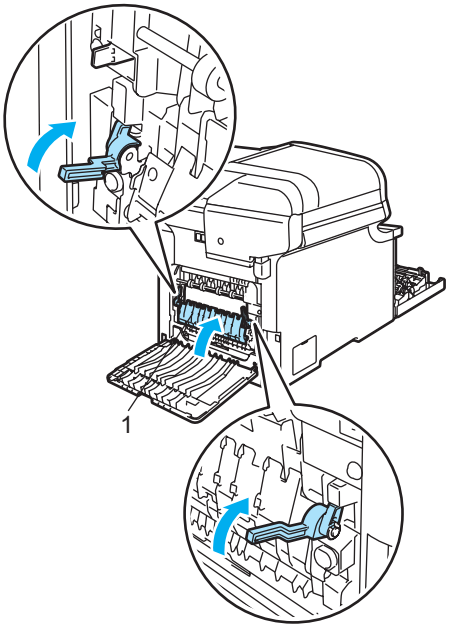

7 Close the back cover.

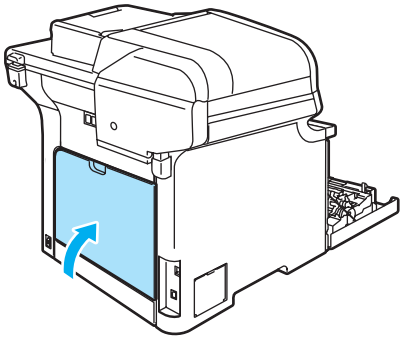

8 Put the drum unit and toner cartridge assembly back in the machine.

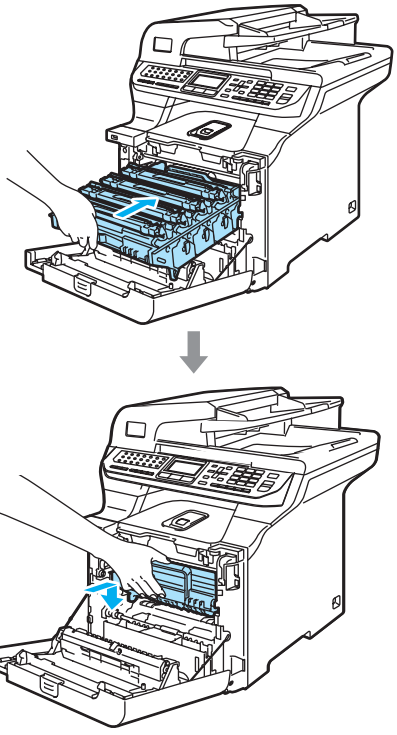

9 Close the front cover of the machine.

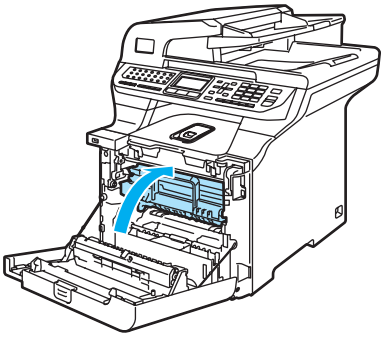

C

Paper is jammed underneath Paper Tray 1 or in the fuser unit

If the LCD shows `Jam Duplex`, follow these steps:

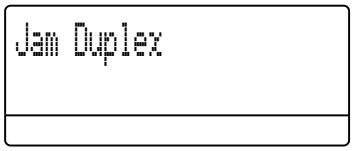

1. Pull the paper tray completely out of the machine and check inside the machine.

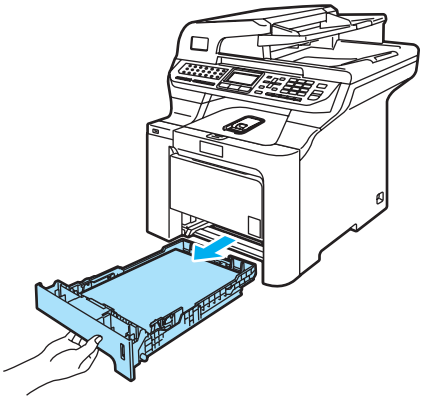

2. If paper is not caught inside the machine, check underneath the paper tray.

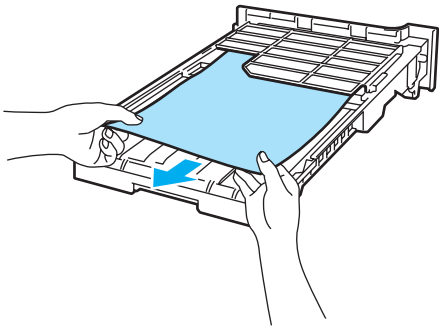

Note

DO NOT put the paper tray back in at this point.

3. If the paper is not caught in the paper tray, open the back cover.

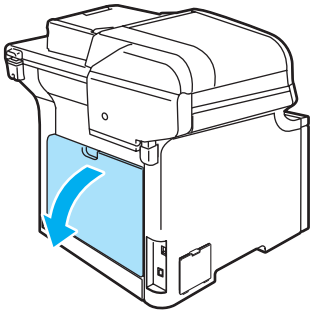

4. Push the grey lever on the left hand side (1) to the right.

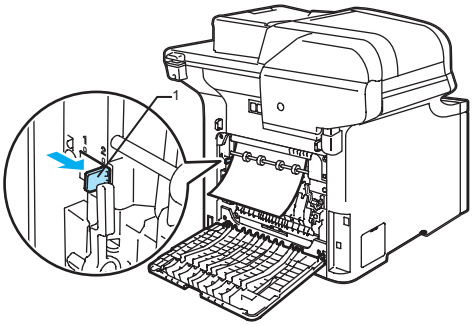

HOT SURFACE

After you have just used the machine, some internal parts of the machine will be extremely hot. When you open the front or back cover of the machine, DO NOT touch the shaded parts shown in the illustration.

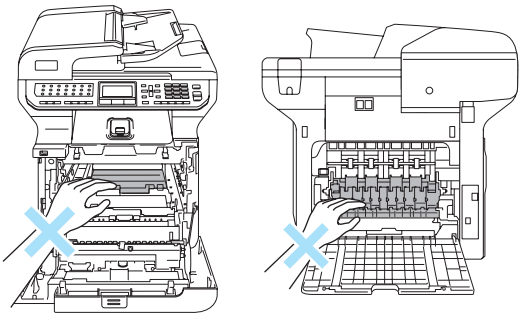

5 Pull out the jammed paper slowly.

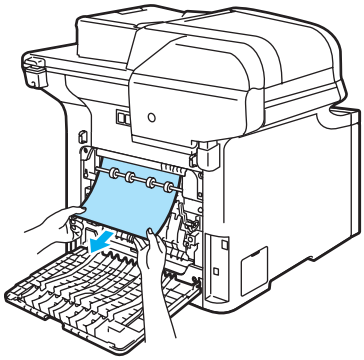

6 Reset the grey lever on the left hand side (1) back to the original position.

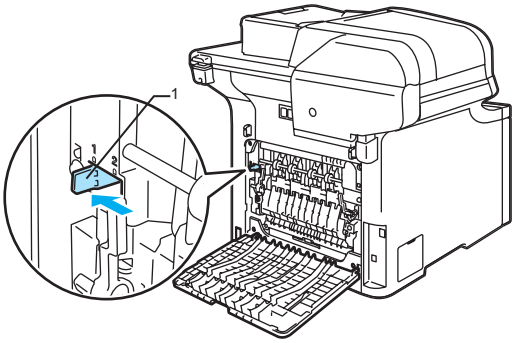

7 Close the back cover.

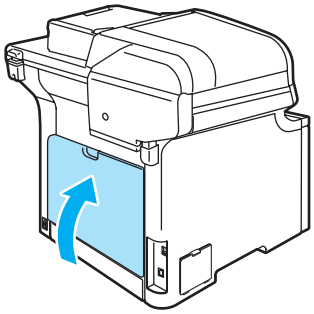

8 Put the paper tray firmly back in the machine.

Routine maintenance

CAUTION

The drum unit contains toner, so handle it carefully. If toner scatters on your hands or clothes, wipe or wash it off with cold water at once.

C

Cleaning the outside of the machine

CAUTION

Use neutral detergents. Cleaning with volatile liquids such as thinner or benzine will damage the outside surface of the machine.

DO NOT use cleaning materials that contain ammonia.

DO NOT use isopropyl alcohol to remove dirt from the control panel. It may crack the panel.

DO NOT use flammable substances any type of spray to clean the inside or outside of the machine. Doing this may cause a fire or electrical shock. (For more information, see *Important safety instructions* on page 103.)

Clean the outside of the machine as follows:

1. Turn off the machine's power switch. Unplug the telephone line cord first, and then unplug the power cord from the electrical socket.

2. Pull the paper tray completely out of the machine.

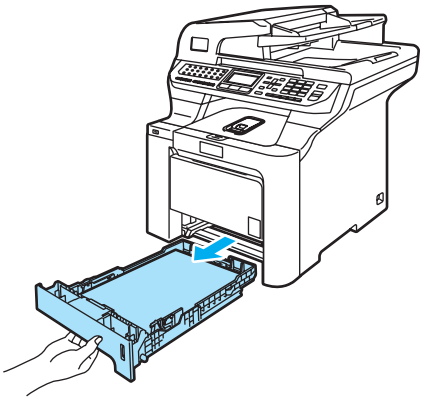

3. Wipe the outside of the machine with a dry, lint-free cloth to remove dust.

4. Remove anything that is stuck inside the paper tray.

5. Wipe the inside of the paper tray with a dry, lint-free cloth to remove dust.

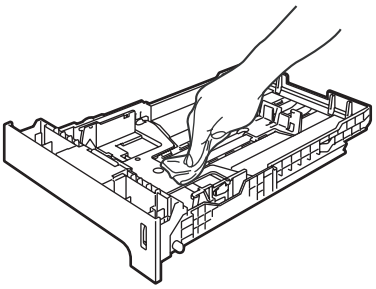

6. Re-load the paper and put the paper tray firmly back in the machine.

7. Plug the machine's power cord back into the AC electrical socket first, and reconnect all cables and telephone line cord. Turn on the machine's power switch.

Cleaning the scanner

1. Turn off the machine's power switch. Unplug the telephone line cord first, and then unplug the power cord from the electrical socket.

2. Lift the document cover (1).
Clean the white plastic surface (2) and scanner glass (3) underneath it with a soft lint-free cloth moistened with a non-flammable glass cleaner.

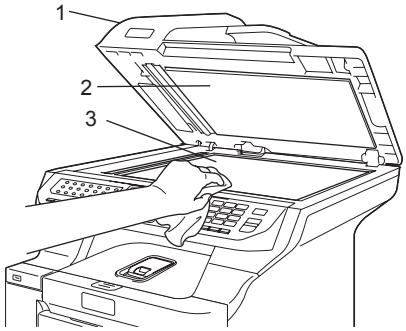

3 In the ADF unit, clean the white bar (1) and the scanner glass strip (2) underneath it with a soft lint-free cloth moistened with a non-flammable glass cleaner.

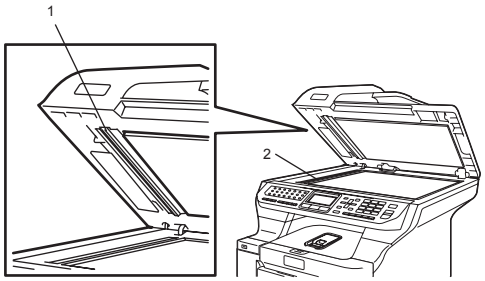

4 Plug the machine's power cord back into the AC electrical socket first, and reconnect all cables and telephone line cord. Turn on the machine's power switch.

Note

In addition to cleaning the glass and glass strip with a non-flammable glass cleaner, run your finger tip over the glass strip to see if you can feel anything on it. If you feel dirt or debris, clean the glass strip again concentrating on that area. You may need to repeat the cleaning process three or four times. To test, make a copy after each cleaning.

Cleaning the laser scanner windows

CAUTION

DO NOT use isopropyl alcohol to clean the laser scanner windows.

DO NOT touch the laser scanner windows with your fingers.

1 Turn off the machine's power switch. Unplug the telephone line cord first, and then unplug the power cord from the electrical socket.

2 Press the front cover release button and then open the front cover.

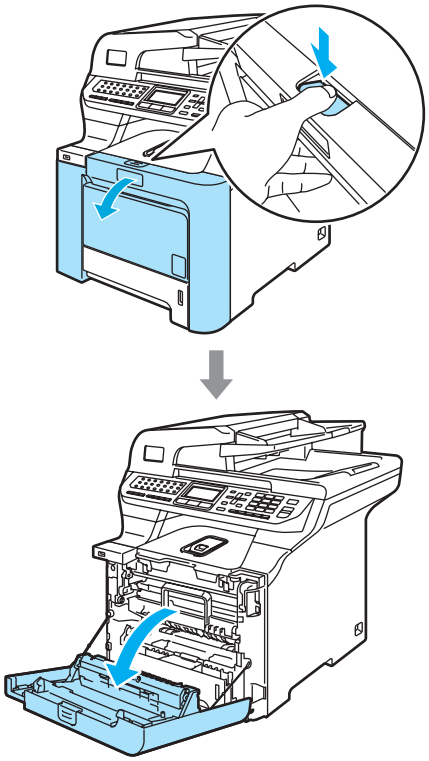

C

3 Hold the green handle of the drum unit. Lift the drum unit up and then pull it out until it stops.

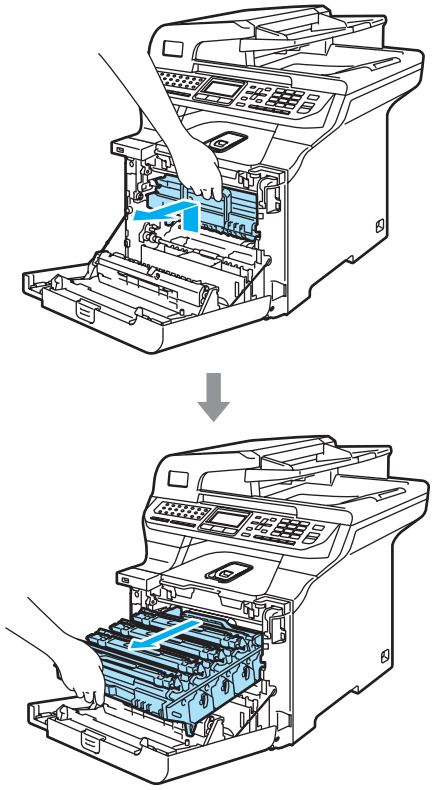

4 Release the grey lock lever (1) that is on the left side of the machine. Lift the front of the drum unit and pull the drum unit completely out of the machine using the green handles on the drum unit.

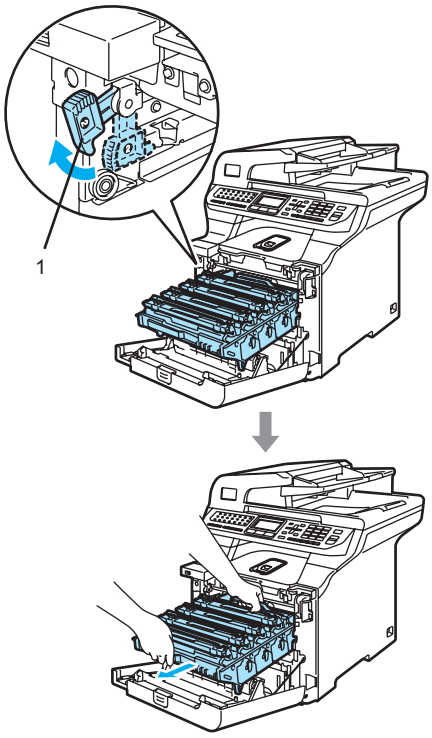

HOT SURFACE

After you have just used the machine, some internal parts of the machine will be extremely hot. When you open the front cover of the machine, DO NOT touch the shaded parts shown in the illustration.

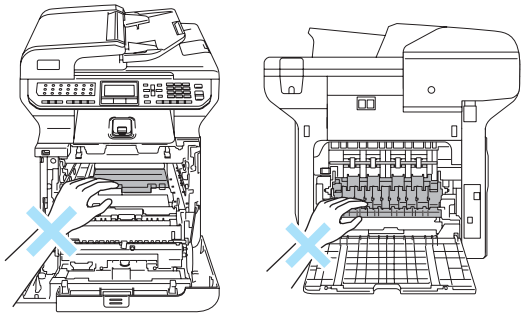

CAUTION

Make sure that you use the drum unit handles when carrying it. DO NOT hold the sides of the drum unit.

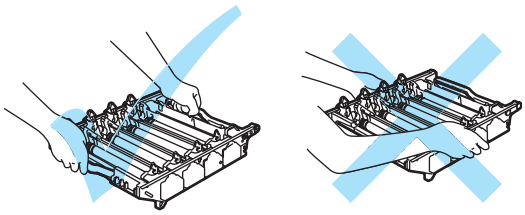

We recommend that you place the drum unit on a flat surface protected by a piece of disposable paper or cloth in case of toner scatter or spillage.

To prevent damage to the machine from static electricity, DO NOT touch the electrodes shown in the illustration.

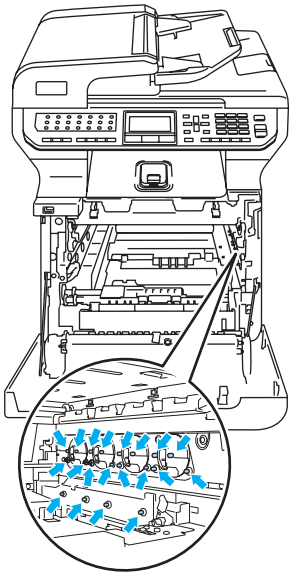

5 Wipe the scanner windows (1) with a dry, lint-free cloth.

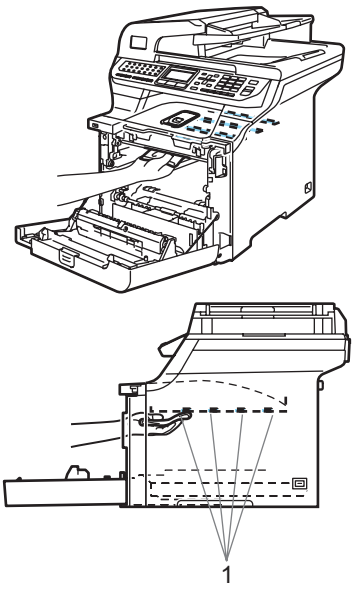

C

6 Put the drum unit back in the machine as follows.

1 Make sure that the grey lock lever (1) is in the up position and put the drum unit in the machine. Push down the grey lock lever (1).

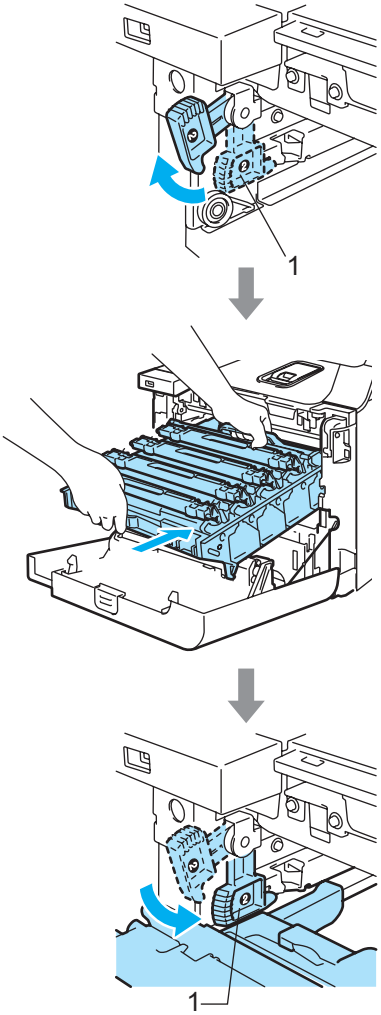

Note

When you put the drum unit in the machine, match the green guides (1) of the drum unit handle to the green arrows (2) on both sides of the machine.

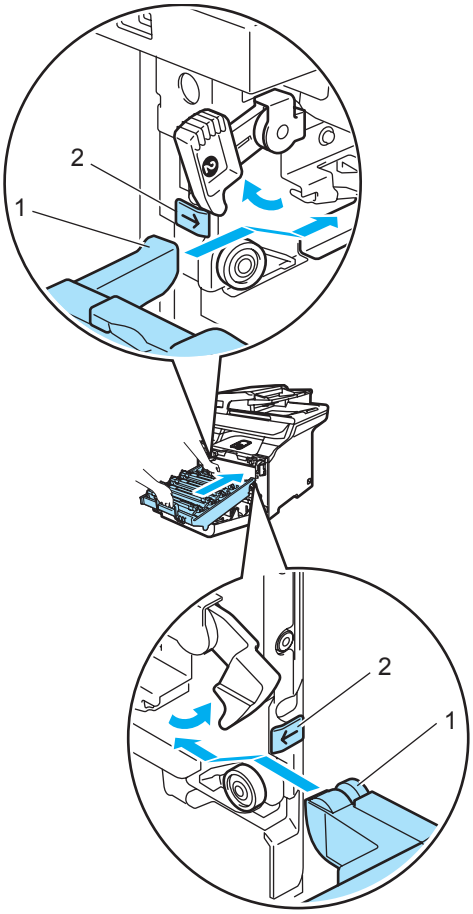

2 Push the drum unit in until it stops.

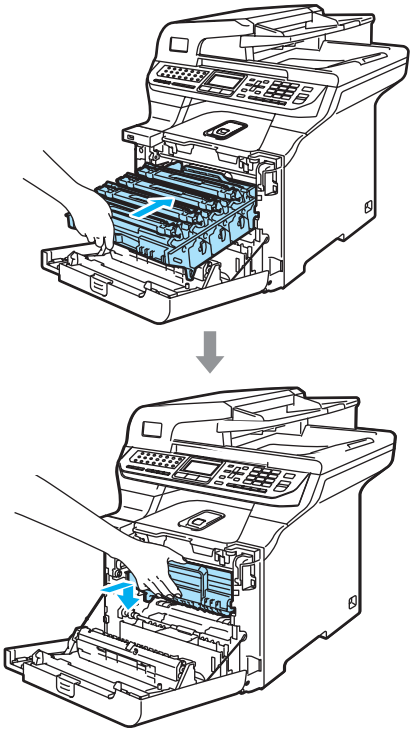

7 Close the front cover of the machine.

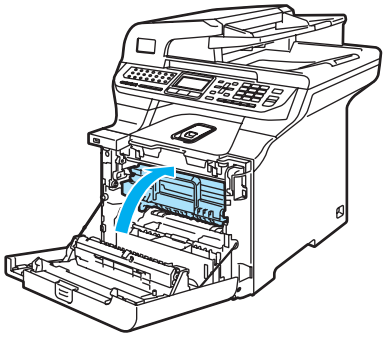

8 Plug the machine's power cord back into the AC electrical socket first, and reconnect all cables and telephone line cord. Turn on the machine's power switch.

Cleaning the corona wires

If you have print quality problems, clean the corona wires as follows:

1 Turn off the machine's power switch. Unplug the telephone line cord first, and then unplug the power cord from the electrical socket.

2 Press the front cover release button and then open the front cover.

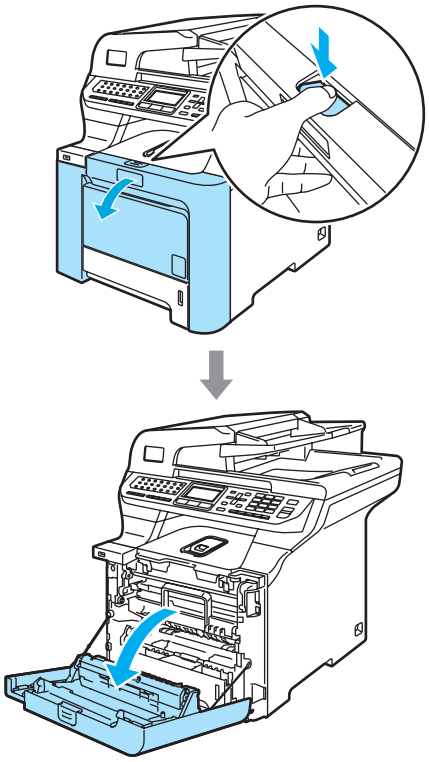

3 Hold the green handle of the drum unit. Lift the drum unit up and then pull it out until it stops.

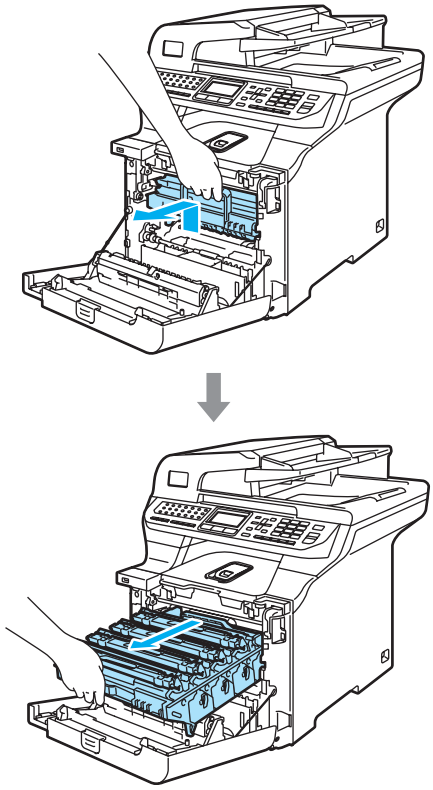

4 Using their coloured handles to lift them out, remove all four toner cartridges from the drum unit.

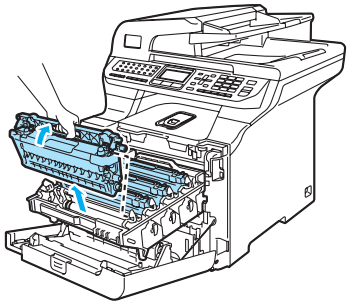

CAUTION

We recommend that you place the toner cartridges on a clean, flat surface with a piece of disposable paper underneath it in case you accidentally spill or scatter toner.

DO NOT put a toner cartridges into a fire. It could explode, resulting in injuries.

Handle the toner cartridges carefully. If toner scatters on your hands or clothes, wipe or wash it off with cold water at once.

To avoid print quality problems, DO NOT touch the shaded parts shown in the illustrations.

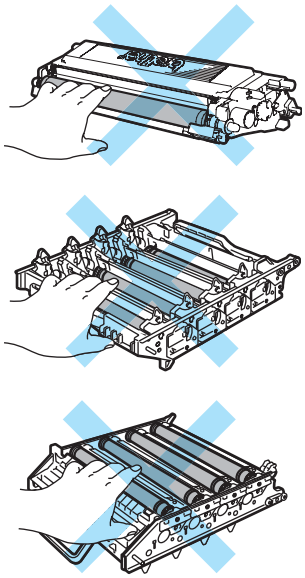

5 Unclip and fold back the white corona wire cover (1).

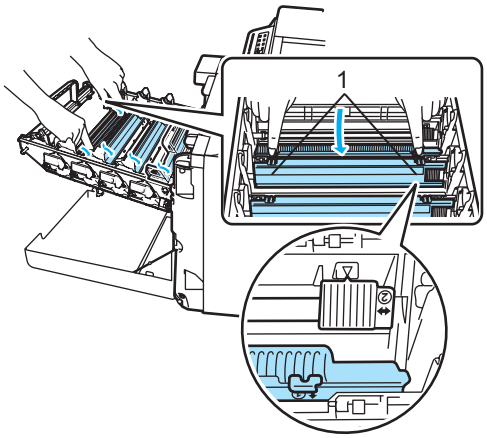

Note

We recommended that you clean the corona wire for each of the colours. If you want to clean only the corona wire of the colour that caused the print quality problem, see the illustration below to identify the position of each of the corona wires.

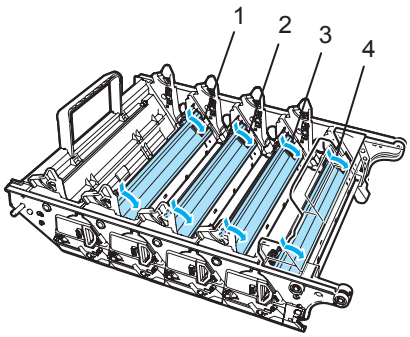

1 **Corona wire cover for Black (K)**
2 **Corona wire cover for Yellow (Y)**
3 **Corona wire cover for Magenta (M)**
4 **Corona wire cover for Cyan (C)**

6 Clean the corona wire inside the drum unit by gently sliding the green tab from left to right and right to left several times.

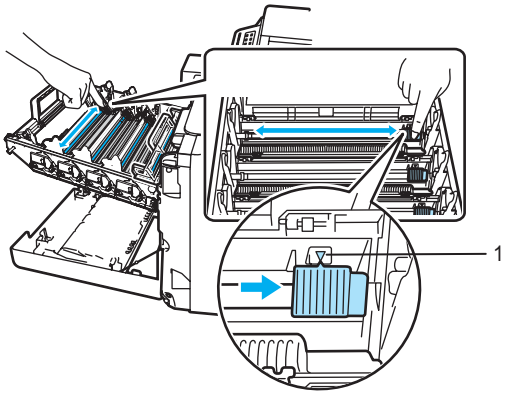

CAUTION

Be sure to return the tab to the home position (▼) (1). If you do not, printed pages may have a vertical stripe.

7 Close the corona wire cover.

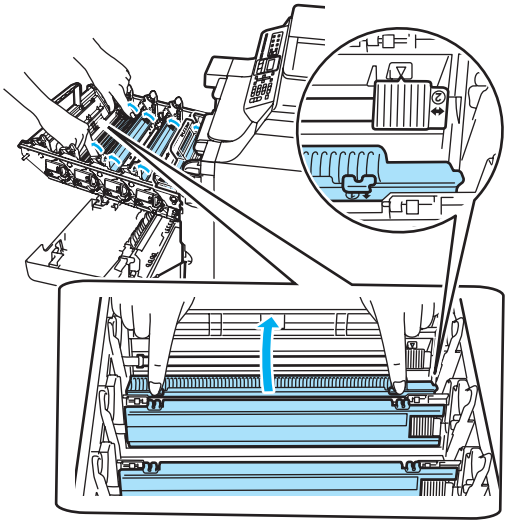

8 Repeat ❺ to ❼ to clean each of the remaining corona wires. There are four corona wires in total.

C

9 Holding the toner cartridges by their coloured handles, insert them one by one back into the drum unit as shown. Make sure that you match the toner cartridge colour to the same colour label on the drum unit, and make sure that you fold down the toner cartridge handle (A) once the toner cartridge is in place. Repeat this for all the toner cartridges.

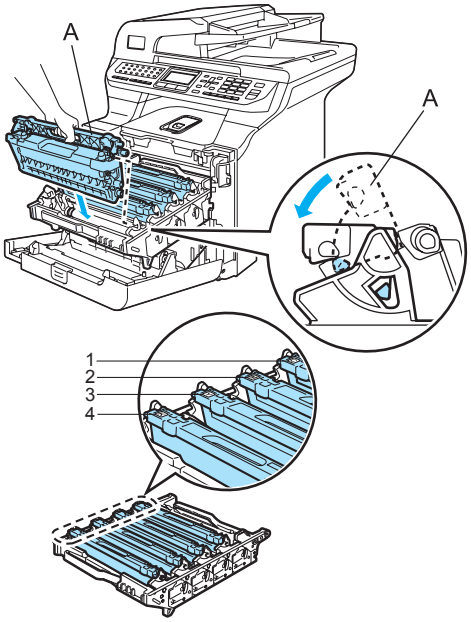

1 **C - Cyan**
2 **M - Magenta**
3 **Y - Yellow**
4 **K - Black**

10 Push the drum unit in until it stops.

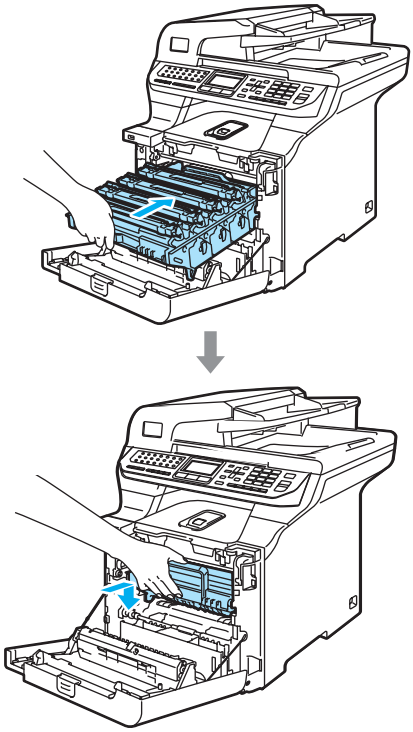

11 Close the front cover of the machine.

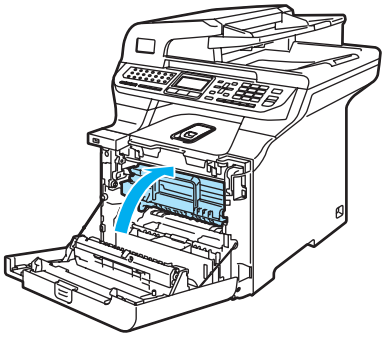

12 Plug the machine's power cord back into the AC electrical socket first, and reconnect all cables and telephone line cord. Turn on the machine's power switch.

Cleaning the drum unit

If you have print quality problems caused by repeating marks on the page, clean the drum unit as follows.

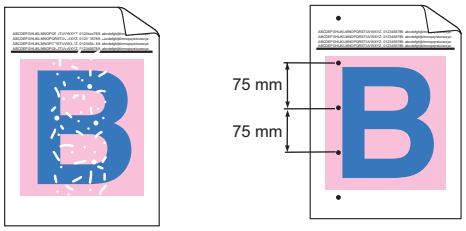

1. Press the front cover release button and then open the front cover.

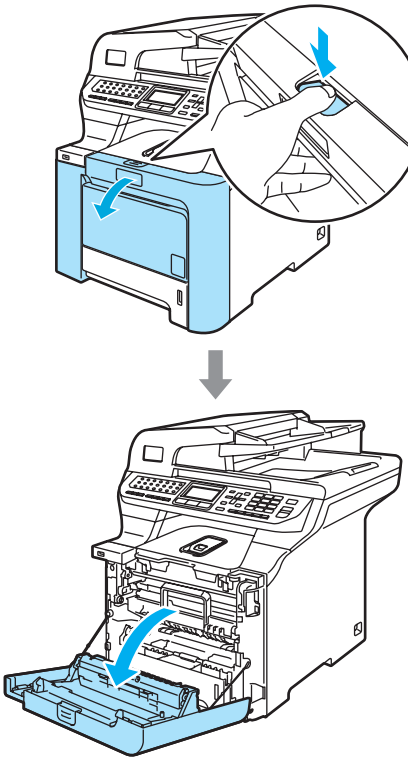

2. Close the front cover of the machine. The machine starts warming up, wait until it finishes warming up before going on to step ❸.

3. Pull out the MP tray (1) and unfold the MP tray support flap (2).

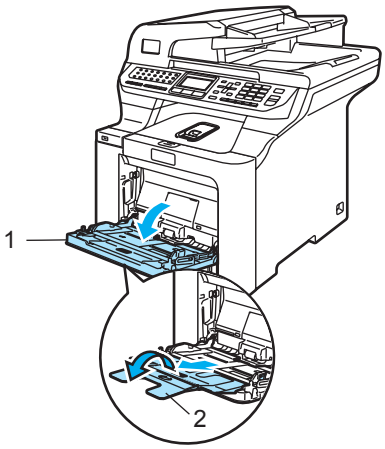

4. Put a blank sheet of A4 or Letter sized paper in the MP tray.

5. While pressing and holding down **Clear/Back** press ◄ until `DRUM CLEANING` is displayed on the LCD.

6. Press **Mono Start** or **Colour Start**. The paper will feed into the machine to start the drum cleaning.

7 The following message appears on the LCD when the machine has finished cleaning.

```
DRUM CLEANING
COMPLETED
```

8 Press **Stop/Exit** so that the machine returns to the Ready state.

9 Try to print again. If this problem still remains, repeat steps ❸ to ❽ several times.
If the problem still remains after repeating step ❸ to ❽ several times, go to step ❿.

10 Turn off the machine's power switch. Unplug the telephone line cord first, and then unplug the power cord from the electrical socket.

11 Press the front cover release button and then open the front cover.

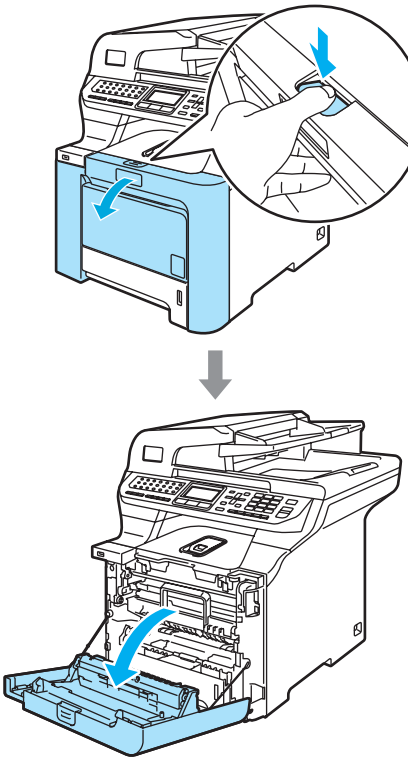

12 Hold the green handle of the drum unit. Lift the drum unit up and then pull it out until it stops.

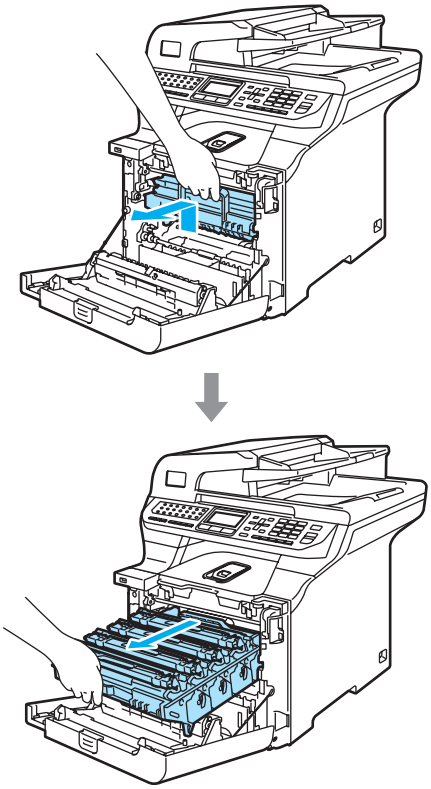

CAUTION

We recommend that you place the drum unit and toner cartridges separately on a clean, flat surface with a piece of disposable paper underneath them in case you accidentally spill or scatter toner.

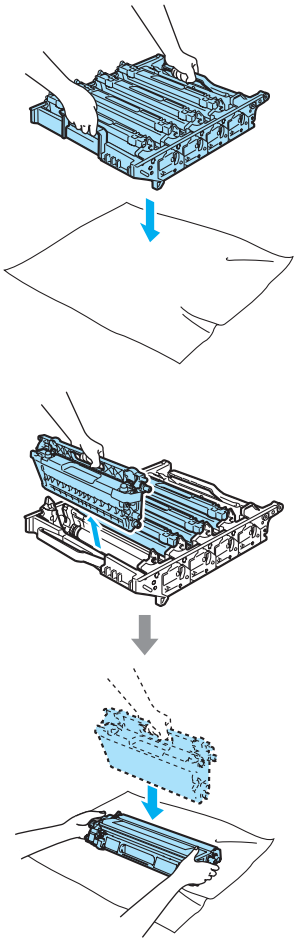

Handle the toner cartridge carefully. If toner scatters on your hands or clothes, wipe or wash it off with cold water at once.

13 Release the grey lock lever (1) that is on the left side of the machine. Lift the front of the drum unit and pull the drum unit completely out of the machine using the green handles on the drum unit.

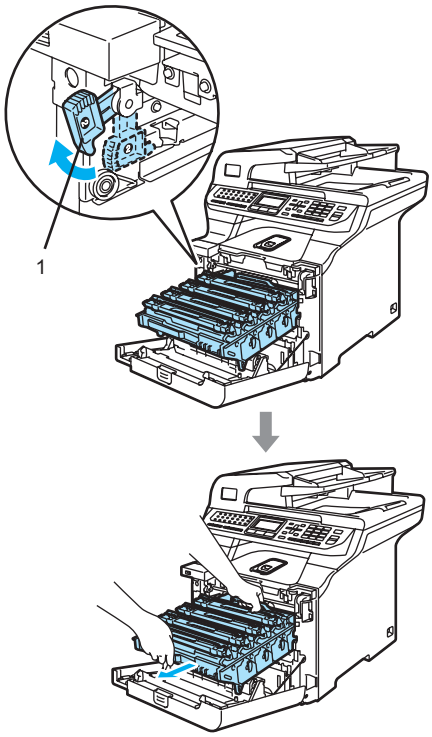

CAUTION

Make sure that you use the drum unit handles when carrying it. DO NOT hold the sides of the drum unit.

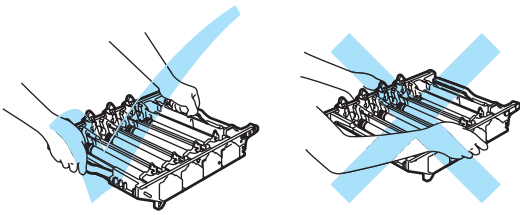

C

14 Using their coloured handles to lift them out, remove all four toner cartridges from the drum unit.

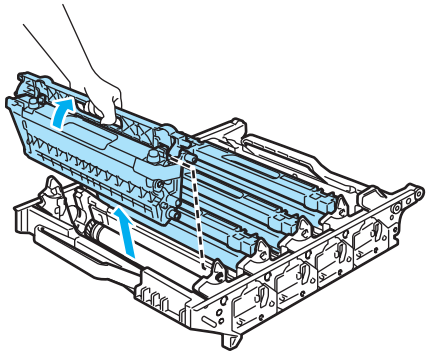

CAUTION

To prevent damage to the machine from static electricity, DO NOT touch the electrodes shown in the illustration.

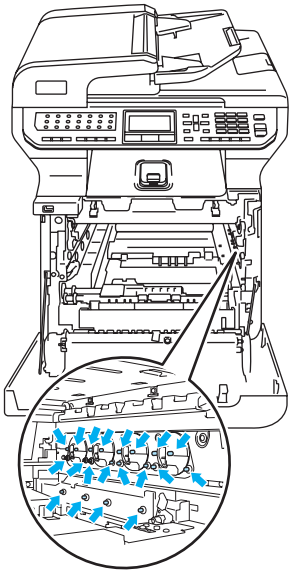

Handle the toner cartridges carefully. If toner scatters on your hands or clothes, wipe or wash it off with cold water at once.

To avoid print quality problems, DO NOT touch the shaded parts shown in the illustrations.

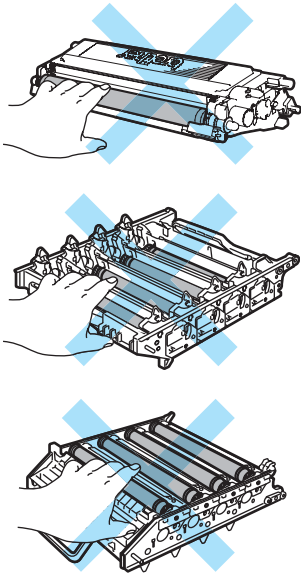

15 While holding both hands, turn the drum unit upside down and place on a piece of disposable paper or cloth. Make sure that the drum unit gears (1) are on your left hand side.

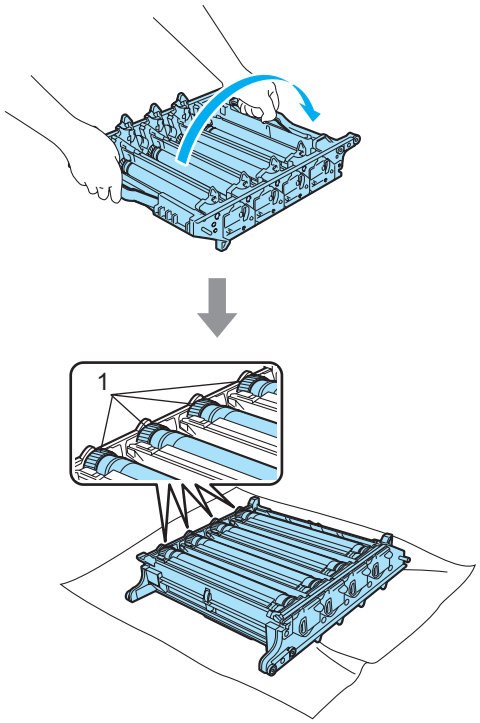

16 See the print sample to identify the colour causing the problem. The colour of the spots or toner stain is the colour of the drum you should clean. For example, if the spots are cyan, you should clean the drum for cyan. Put the print sample in front of the drum, and the find the exact position of the repeating mark.

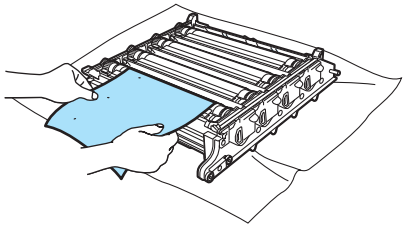

17 Turn the drum unit gear on the drum that matches that mark (for example, for a cyan mark, turn the drum for cyan). You should see the mark eventually on the surface of the drum (1).

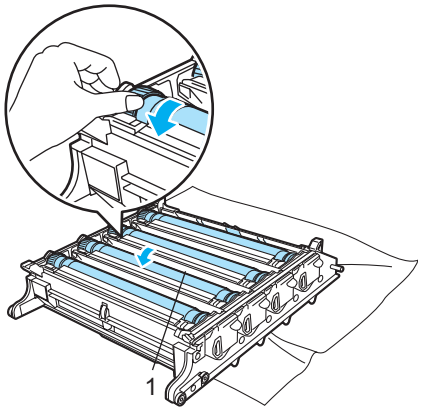

18 When you have found the mark on the drum that matches the print sample, wipe the surface of the drum gently with a cotton swab until the dust or paper powder on the surface comes off.

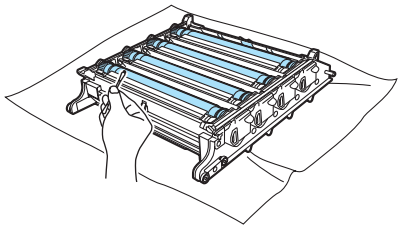

CAUTION

The drum is photosensitive so DO NOT touch it with your fingers.

DO NOT clean the surface of the photosensitive drum with a sharp object.

DO NOT use excessive force when cleaning the drum surface.

C

19 Turn the drum unit gear toward you by hand to return it to the home position. The home position of each drum can be identified by matching the number on the drum unit gear to the same number on the side of the drum unit as shown in the illustration. Make sure that the number on each of the four drum unit gears matches the corresponding number on the side of the drum unit.

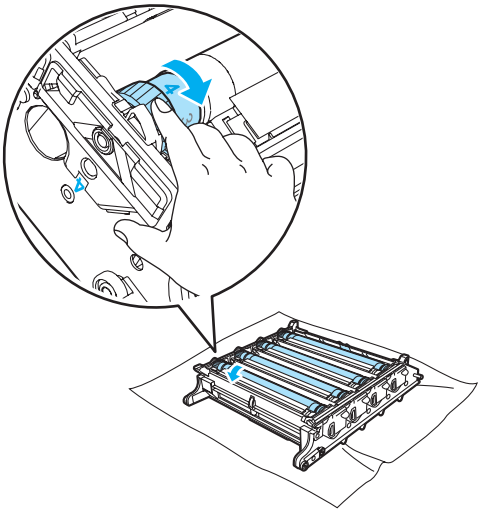

20 Holding the toner cartridges by their coloured handles, insert them one by one back into the drum unit as shown. Make sure that you match the toner cartridge colour to the same colour label on the drum unit, and make sure that you fold down the toner cartridge handle (A) once the toner cartridge is in place. Repeat this for all the toner cartridges.

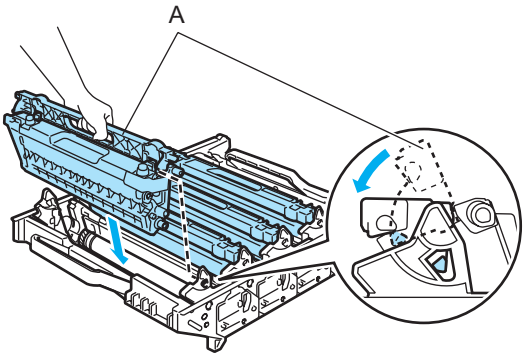

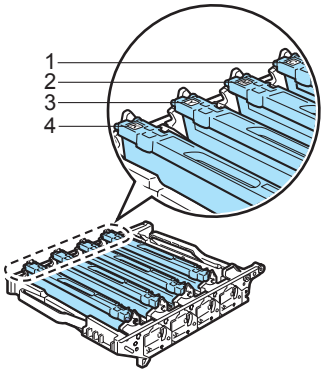

1 C - Cyan

2 M - Magenta

3 Y - Yellow

4 K - Black

21 Put the drum unit back in the machine as follows.

1 Make sure that the grey lock lever (1) is in the up position and put the drum unit in the machine. Push down the grey lock lever (1).

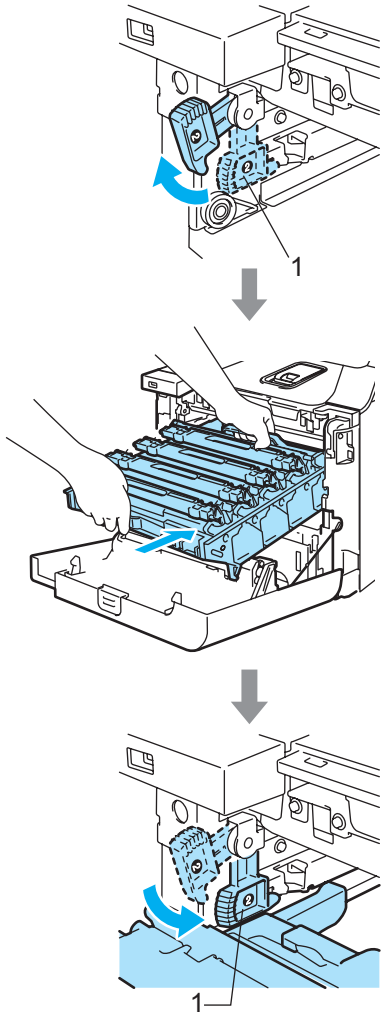

Note

When you put the drum unit in the machine, match the green guides (1) of the drum unit handle to the green arrows (2) on both sides of the machine.

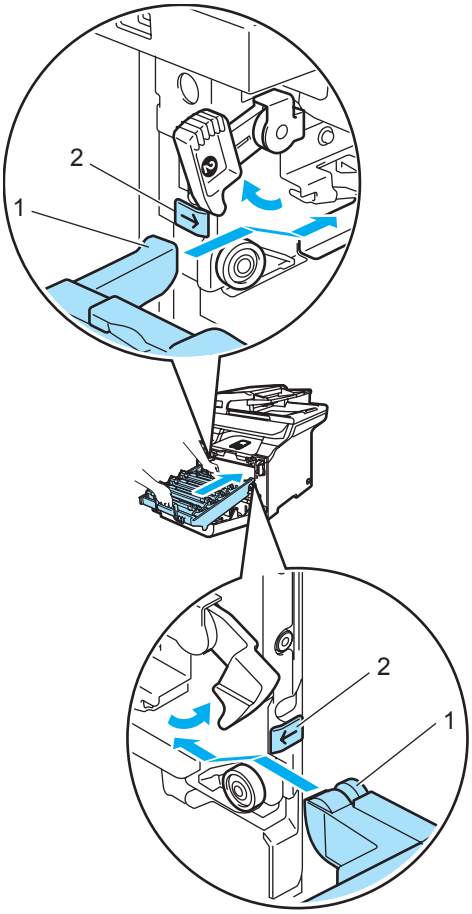

C

2 Push the drum unit in until it stops.

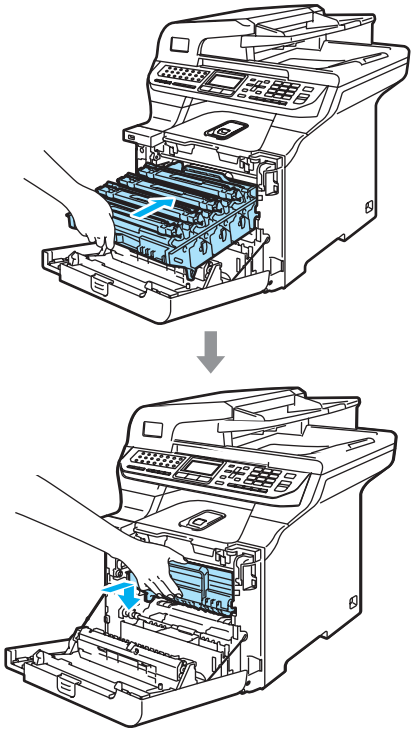

㉒ Close the front cover of the machine.

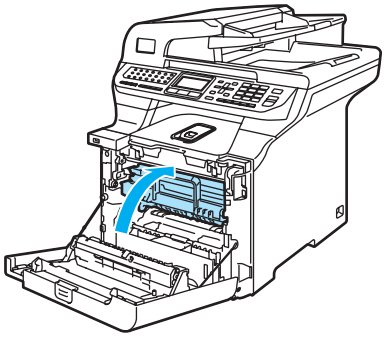

㉓ Plug the machine’s power cord back into the AC electrical socket first, and reconnect all cables.
Turn on the machine’s power switch.

Replacing the consumable items

When the time comes to replace consumable items, the following messages will appear on the LCD.

The machine will stop printing when the following maintenance messages appear on the LCD.

LCD messages	Consumable item to replace	Approximate life	How to replace	Order No.
Toner Life End Replace Black(K) Toner Cartridge. [1]	Toner cartridges standard	2,500 pages (Black) [2] 1,500 pages (Cyan, Magenta, Yellow) [2]	See *Replacing a toner cartridge* on page 169.	TN-130BK TN-130C TN-130M TN-130Y
	Toner cartridges high yield	5,000 pages (Black) [2] 4,000 pages (Cyan, Magenta, Yellow) [2]		TN-135BK TN-135C TN-135M TN-135Y
Waste Toner Full	Waste toner box	20,000 pages [3]	See *Waste Toner Box Full message* on page 186.	WT-100CL

[1] The toner cartridge colour which is used up is shown in the message.

[2] At 5% print coverage (A4 or Letter size). The actual number of printed pages will vary depending on the print jobs and paper you use.

[3] At 5% print coverage for CMYK each (A4 or Letter size). The actual number of printed pages will vary depending on the print jobs and paper you use.

The following are maintenance messages that appear on the LCD in the Ready mode. These message provide advanced warnings to replace the consumable items before they run out. To avoid any inconvenience, you may wish to buy spare consumable items before the machine stops printing.

LCD messages	Consumable item to replace	Approximate life	How to replace	Order No.
Toner Low Prepare New Black(K) Toner Cartridge. [1]	Toner cartridges standard	2,500 pages (Black) [2] 1,500 pages (Cyan, Magenta, Yellow) [2]	See *Replacing a toner cartridge* on page 169.	TN-130BK TN-130C TN-130M TN-130Y
	Toner cartridges high yield	5,000 pages (Black) [2] 4,000 pages (Cyan, Magenta, Yellow) [2]		TN-135BK TN-135C TN-135M TN-135Y
Change Parts Waste Toner Box	Waste toner box	20,000 pages [3]	See *Replacing the waste toner box* on page 186.	WT-100CL

[1] The toner cartridge colour which is near the end of life is shown in the message.

[2] At 5% print coverage (A4 or Letter size). The actual number of printed pages will vary depending on the print jobs and paper you use.

[3] At 5% print coverage for CMYK each (A4 or Letter size). The actual number of printed pages will vary depending on the print jobs and paper you use.

The following are maintenance messages that appear alternately with the normal message on the upper row of the LCD when the machine is in the Ready mode. These messages advise you that you will need to replace each of the consumable items as soon as possible, since the consumable item's end of life has been reached. The machine will continue printing when any of these messages appear on the LCD.

LCD messages	Consumable item to replace	Approximate life [1]	How to replace	Order No.
Change Parts Drum	Drum unit	17,000 pages	See *Replacing the drum unit* on page 174.	DR-130CL
Change Parts Belt Unit	Belt unit	50,000 pages	See *Replacing the belt unit* on page 181.	BU-100CL
Change Parts Fuser Unit	Fuser unit	80,000 pages	Call your Brother dealer to purchase the fuser unit.	—
Change Parts Laser Unit	Laser unit	100,000 pages	Call your Brother dealer to purchase the laser unit.	—
Change Parts PF kit 1	Paper feeding kit 1 (Paper pick-up roller and Separator pad for Tray 1)	100,000 pages	Call your Brother dealer to purchase the paper feeding kit 1.	—
Change Parts PF kit 2 (when the optional lower tray is installed)	Paper feeding kit 2 (Paper pick-up roller and Separator pad for Tray 2)	100,000 pages	Call your Brother dealer to purchase the paper feeding kit 2.	—
Change Parts PF kit MP	Paper feeding kit MP (Paper pick-up roller and Separator pad for MP tray)	50,000 pages	Call your Brother dealer to purchase the paper feeding kit MP.	—

[1] When printing on Letter or A4 size paper. The actual number of printed pages will vary depending on the print jobs and paper you use.

Note

- Discard used consumable items according to local regulations, keeping it separate from domestic waste. If you have questions, call your local waste disposal office. Be sure to reseal the consumable items tightly so that the material inside does not spill.
- We recommend placing used consumable items on a piece of paper to prevent accidentally spilling or scattering the material inside.
- If you use paper that is not a direct equivalent for the recommended paper, the life of consumable items and machine parts may be reduced.
- The projected life for toner cartridges and a waste toner box is based on an average 5% coverage of the printable area using any colour toner cartridge. Frequency of replacement will vary depending on the complexity of printed pages, percentage of coverage and type of media used.

Replacing a toner cartridge

Order Numbers:

Toner Cartridge Standard:
TN-130 (BK, C, M, Y)

Toner Cartridge High Yield:
TN-135 (BK, C, M, Y)

The High Yield toner cartridges can print approximately 5,000 pages (Black) and approximately 4,000 pages each (Cyan, Magenta and Yellow). The Standard toner cartridges can print approximately 2,500 pages (Black) and approximately 1,500 pages each (Cyan, Magenta and Yellow). Actual page count will vary depending on your average type of document (i.e., standard letter, detailed graphics).

Toner low message

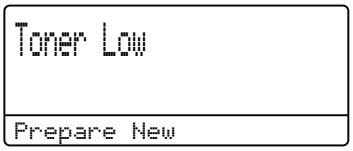

The machine is supplied with the Standard TN-130 toner cartridge. When a toner cartridge is running low, the LCD shows `Toner Low`.

Note

It is a good idea to keep new toner cartridges ready for use when you see the `Toner Low` warning.

Toner life end message

When the following message appears on the LCD, you need to replace the toner cartridge. The second line of the LCD indicates which colour you need to replace.

Discard the used toner cartridge according to local regulations, keeping it separate from domestic waste. You can also check our ecology website www.brothergreen.co.uk for recycling information.Be sure to seal up the toner cartridge tightly so that toner powder does not spill out of the cartridge. If you have questions, call your local waste disposal office.

Note

We recommend that you clean the machine and corona wires of the drum unit when you replace a toner cartridge. (See *Cleaning the laser scanner windows* on page 151 and *Cleaning the corona wires* on page 155.)

Replacing the toner cartridges

HOT SURFACE

After you have just used the machine, some internal parts of the machine will be extremely hot. When you open the front or back cover of the machine, DO NOT touch the shaded parts shown in the illustration.

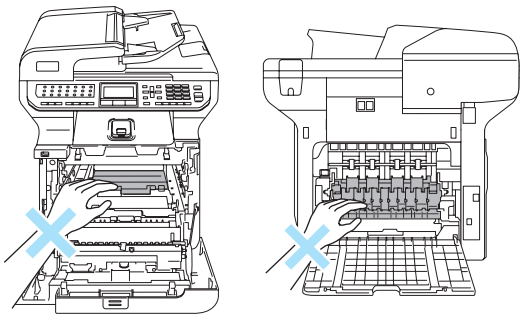

1 Turn off the machine's power switch. Press the front cover release button and then open the front cover.

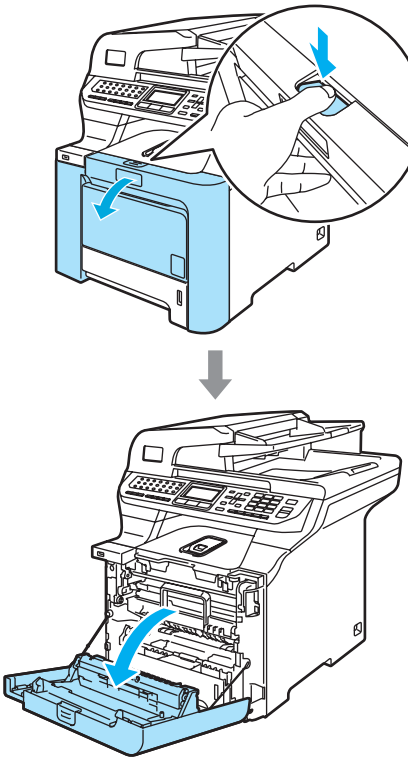

2 Hold the green handle of the drum unit. Lift the drum unit up and then pull it out until it stops.

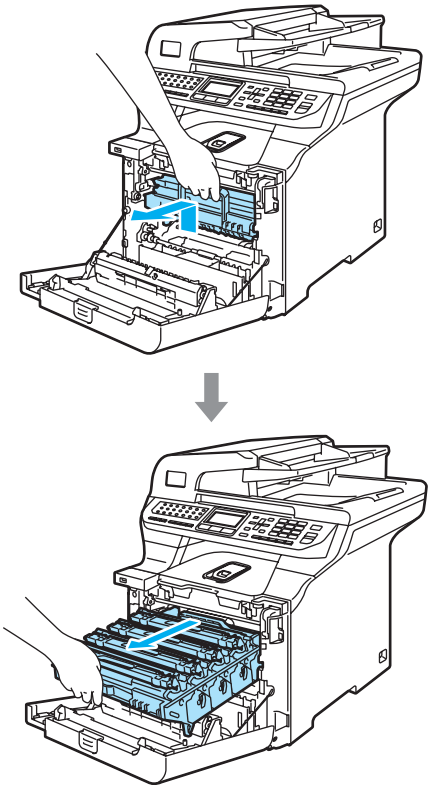

3 Hold the handle of the toner cartridge and pull it out of the drum unit. Repeat this for all the toner cartridges.

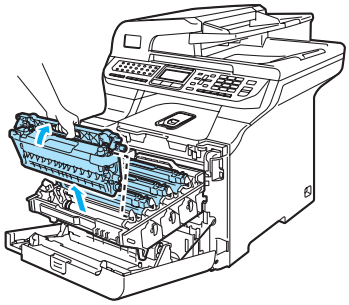

CAUTION

We recommend that you place the toner cartridges on a clean, flat surface with a piece of disposable paper underneath it in case you accidentally spill or scatter toner.

DO NOT put a toner cartridges into a fire. It could explode, resulting in injuries.

Handle the toner cartridges carefully. If toner scatters on your hands or clothes, wipe or wash it off with cold water at once.

To avoid print quality problems, DO NOT touch the shaded parts shown in the illustrations.

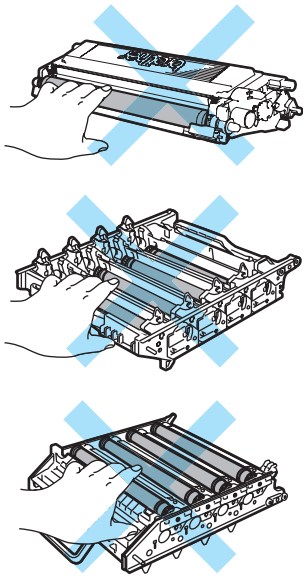

CAUTION

Brother machines are designed to work with toner of a particular specification and will work to a level of optimum performance when used with genuine Brother toner cartridges (**TN-130/TN-135**). Brother cannot guarantee this optimum performance if toner or toner cartridges of other specifications are used. Brother does not therefore recommend the use of cartridges other than genuine Brother cartridges with this machine, or the refilling of empty cartridges with toner from other sources. If damage is caused to the drum unit or other part of this machine as a result of the use of toner or toner cartridges other than genuine Brother products due to the incompatibility or lack of suitability of those products with this machine, any repairs required as a result may not be covered by the warranty.

Unpack the toner cartridge just before you put it in the machine. If a toner cartridge is left unpacked for a long time, the toner life will be shortened.

Note

- Be sure to seal up the toner cartridge tightly in a suitable bag so that toner powder does not spill out of the cartridge.
- Discard the used toner cartridge according to local regulations, keeping it separate from domestic waste. If you have questions, call your local waste disposal office.

CAUTION

DO NOT use flammable substances near the machine. DO NOT use any type of spray to clean the inside or outside of the machine. Doing this may cause a fire or electrical shock. Refer to *Routine maintenance* on page 149 for how to clean the machine.

4 Clean the corona wires as follows.

1 Push to release the latches of the white corona wire cover (1), and then open the cover.

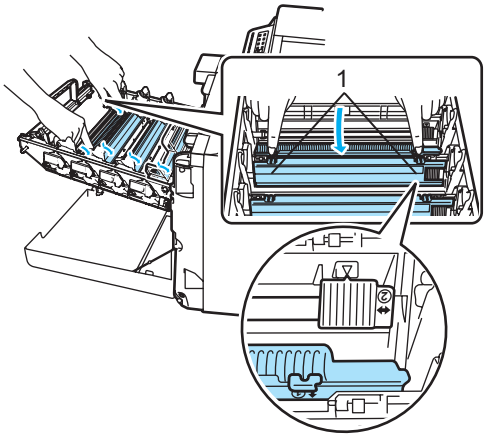

2 Clean the corona wire inside the drum unit by gently sliding the green tab from left to right and right to left several times.

CAUTION

Be sure to return the tab to the home position (▼) (1). If you do not, printed pages may have a vertical stripe.

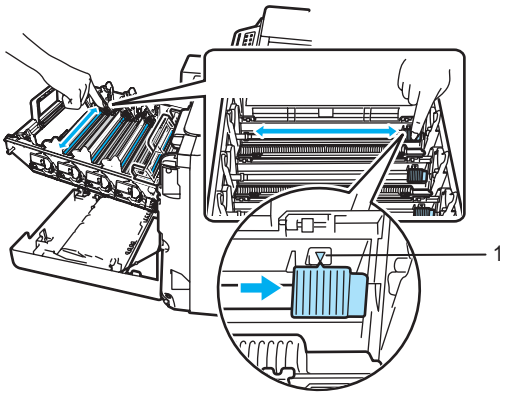

3 Close the corona wire cover.

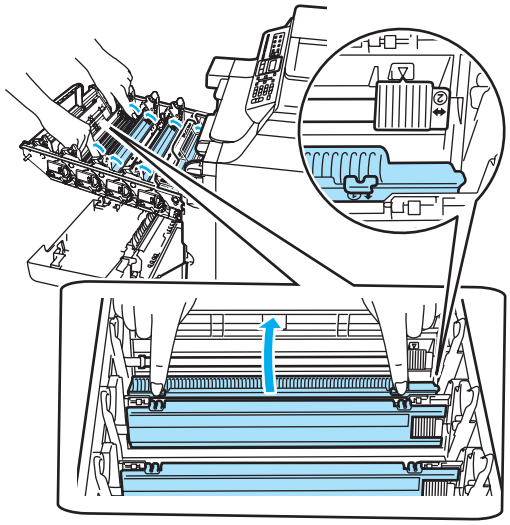

4 Repeat step **1** through step **3** to clean each of the remaining three corona wires.

5 Unpack the new toner cartridge. Hold the cartridge with both hands and gently shake it five or six times to spread the toner evenly inside the cartridge.

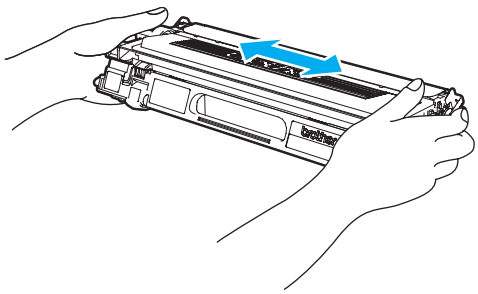

6 Remove the orange protective cover.

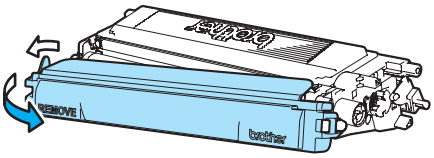

7 Holding the toner cartridges by their coloured handles, insert them one by one back into the drum unit as shown. Make sure that you match the toner cartridge colour to the same colour label on the drum unit, and make sure that you fold down the toner cartridge handle (A) once the toner cartridge is in place. Repeat this for all the toner cartridges.

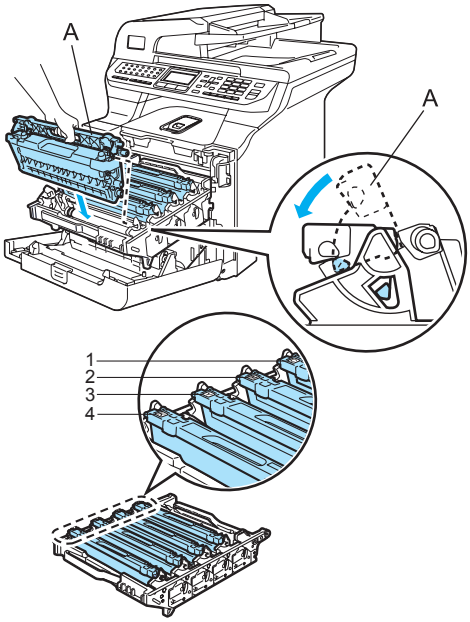

1 C - Cyan

2 M - Magenta

3 Y - Yellow

4 K - Black

C

8 Push the drum unit in until it stops.

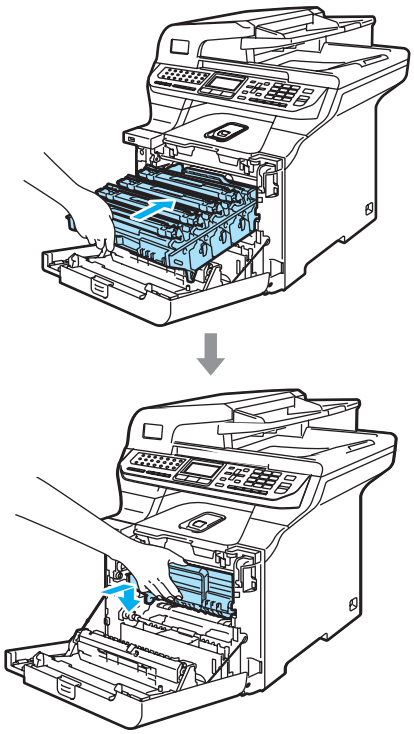

9 Close the front cover of the machine.

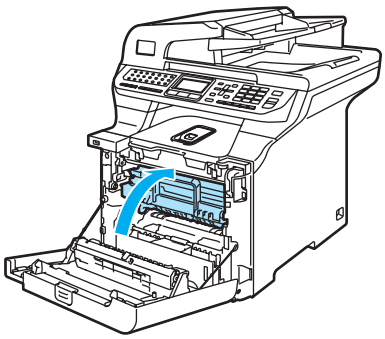

Replacing the drum unit

Order Number: DR-130CL

Change Parts Drum message

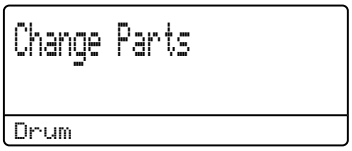

The machine uses a drum unit to create print images on paper. If the LCD shows `Change Parts Drum`, the drum unit is near the end of its life and it is time to buy a new one.

Even if the LCD shows `Change Parts Drum`, you may be able to continue printing without having to replace the drum unit for a while. However, if there is a noticeable deterioration in the output print quality (even before `Change Parts Drum` appears), then the drum unit should be replaced. You should clean the machine when you replace the drum unit. (See *Cleaning the laser scanner windows* on page 151.)

CAUTION

While removing the drum unit, handle it carefully because it may contain toner. If toner scatters on your hands or clothes, wipe or wash it off with cold water at once.

Note

The drum unit is a consumable item, and it is necessary to replace it periodically. There are many factors that determine the actual drum life, such as temperature, humidity, type of paper and how much toner you use for the number of pages per print job. The estimated drum life is approximately 17,000 pages. The actual number of pages your drum will print may be significantly less than these estimates. Because we have no control over the many factors that determine the actual drum life, we cannot guarantee a minimum number of pages that will be printed by your drum.

Replacing the drum unit

CAUTION

Wait to unpack a new drum unit until immediately before installing it. Put the old drum unit into the plastic bag.

HOT SURFACE

After you have just used the machine, some internal parts of the machine will be extremely hot. When you open the front or back cover of the machine, DO NOT touch the shaded parts shown in the illustration.

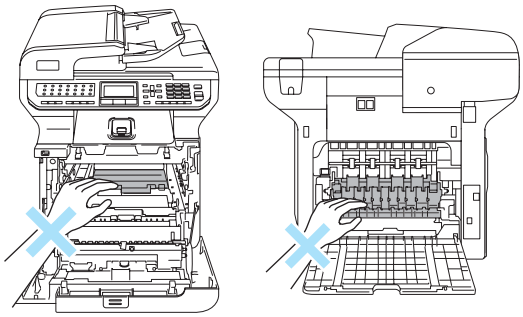

1. Turn off the machine's power switch. Press the front cover release button and then open the front cover.

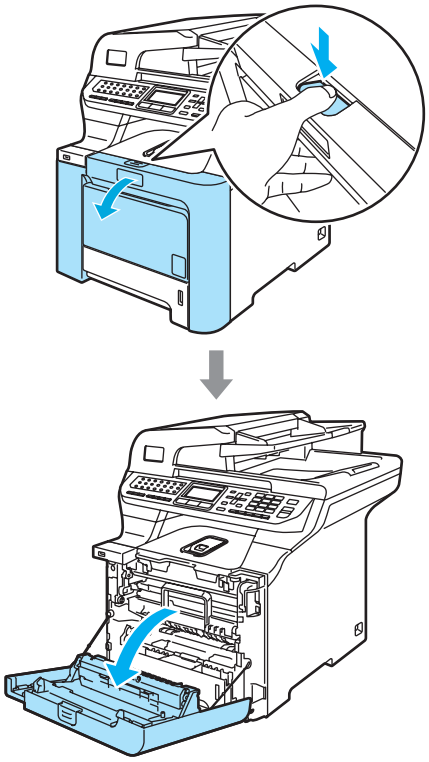

2 Hold the green handle of the drum unit. Lift the drum unit up and then pull it out until it stops.

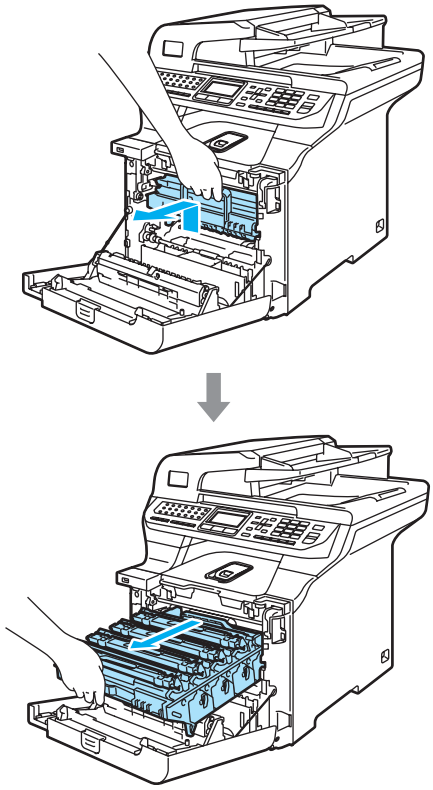

CAUTION

We recommend that you place the drum unit and toner cartridges separately on a clean, flat surface with a piece of disposable paper underneath them in case you accidentally spill or scatter toner.

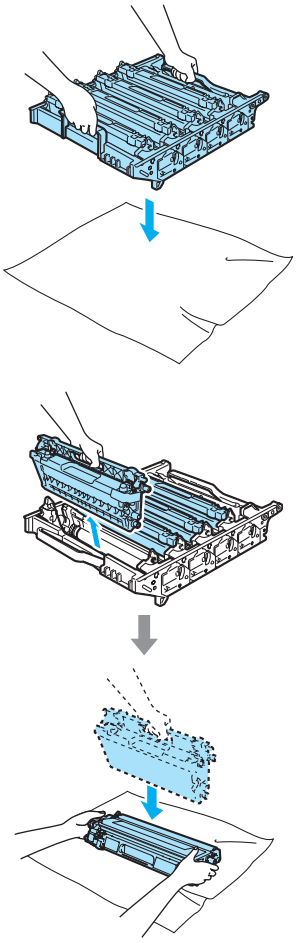

Handle the toner cartridge carefully. If toner scatters on your hands or clothes, wipe or wash it off with cold water at once.

3 Release the grey lock lever (1) that is on the left side of the machine. Lift the front of the drum unit and pull the drum unit completely out of the machine using the green handles on the drum unit.

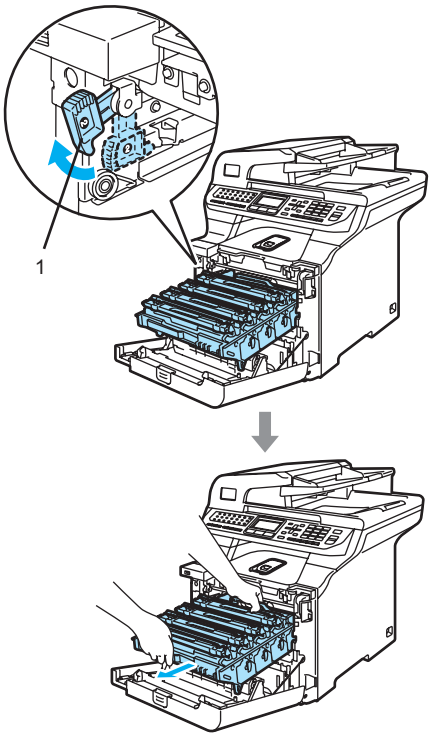

Note

Discard the used drum unit according to local regulations, keeping it separate from domestic waste. Be sure to seal up the drum unit tightly so that toner powder does not spill out of the unit. If you have questions, call your local waste disposal office.

CAUTION

To prevent damage to the machine from static electricity, DO NOT touch the electrodes shown in the illustration.

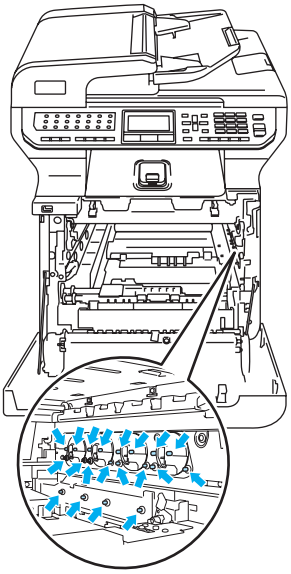

Make sure that you use the drum unit handles when carrying it. DO NOT hold the sides of the drum unit.

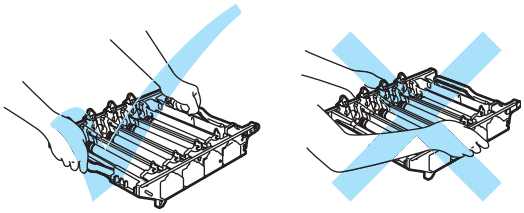

C

To avoid print quality problems, DO NOT touch the shaded parts shown in the illustrations.

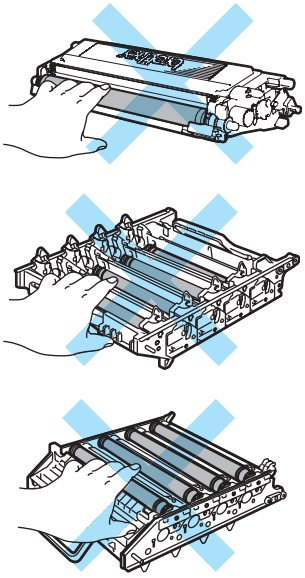

4 Using their coloured handles to lift them out, remove all four toner cartridges from the drum unit.

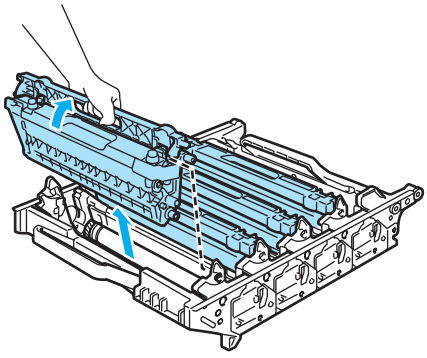

5 Unpack the new drum unit and remove the protective cover.

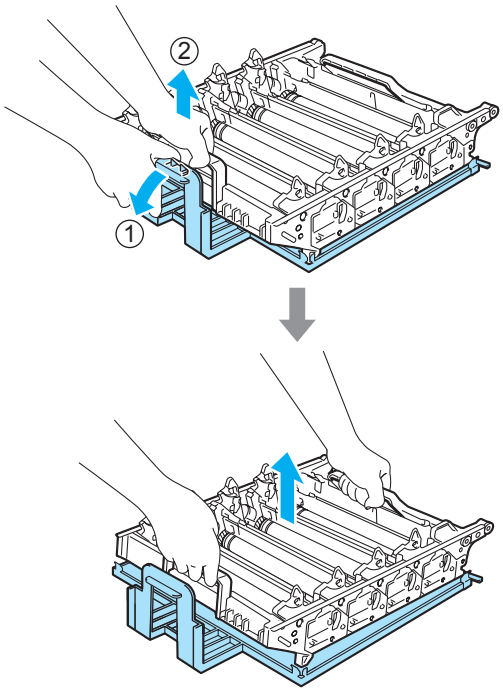

6 Holding the toner cartridges by their coloured handles, insert them one by one back into the drum unit as shown. Make sure that you match the toner cartridge colour to the same colour label on the drum unit, and make sure that you fold down the toner cartridge handle (A) once the toner cartridge is in place. Repeat this for all the toner cartridges.

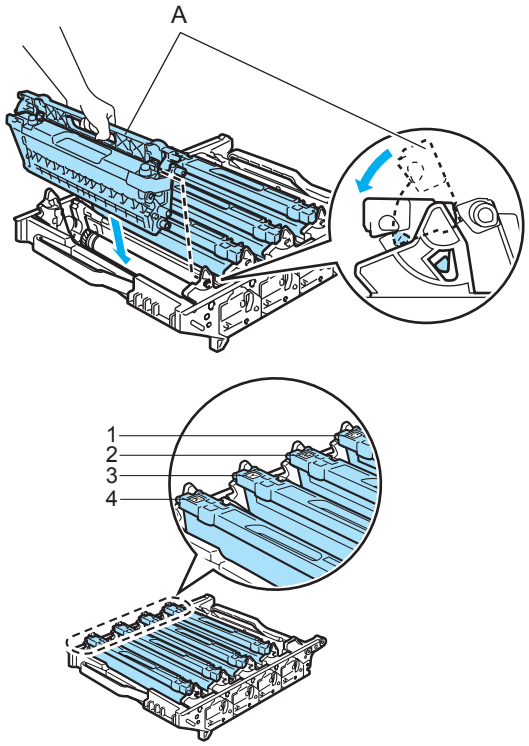

1 **C - Cyan**
2 **M - Magenta**
3 **Y - Yellow**
4 **K - Black**

7 Put the drum unit back in the machine as follows.

1 Make sure that the grey lock lever (1) is in the up position and put the drum unit in the machine. Push down the grey lock lever (1).

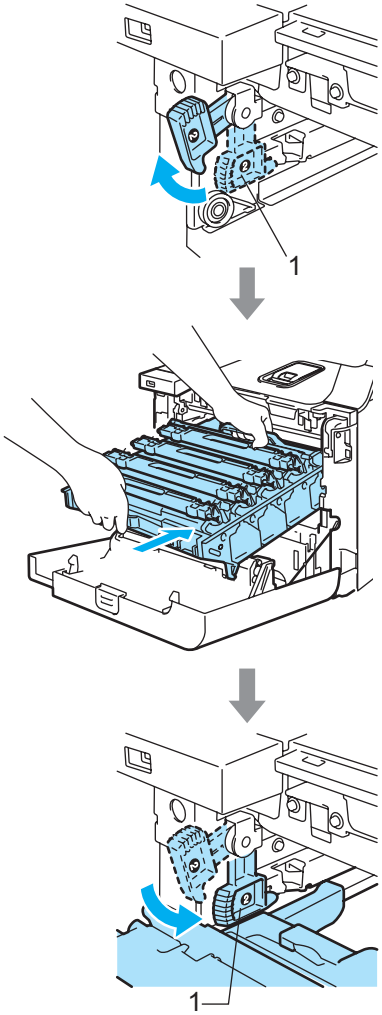

C

Note

When you put the drum unit in the machine, match the green guides (1) of the drum unit handle to the green arrows (2) on both sides of the machine.

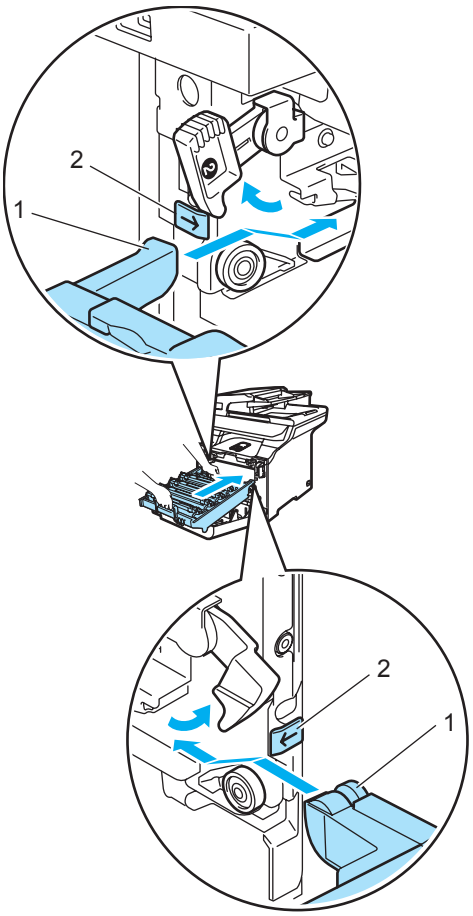

2 Push the drum unit in until it stops.

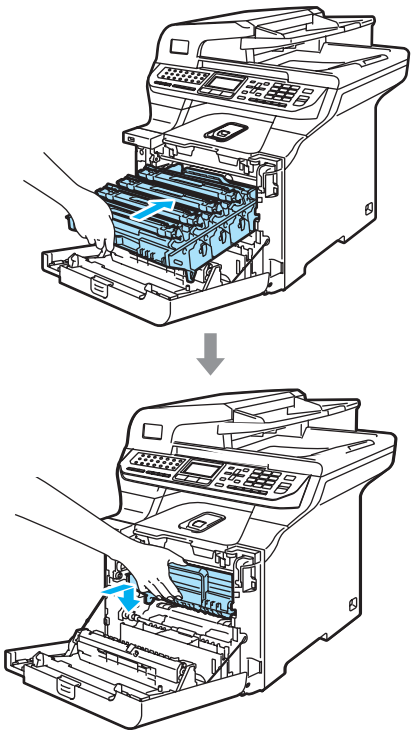

8 Close the front cover of the machine.

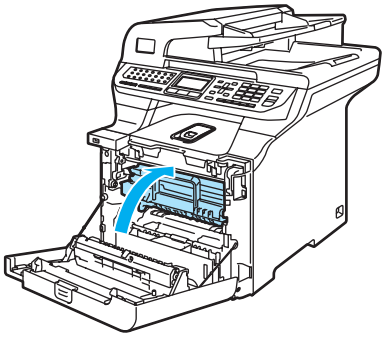

When you replace the drum unit with a new one, you need to reset the drum unit counter by completing the following steps:

9 Turn on the machine's power switch.

10 Press **Menu**, **8**, **4**.
Only the parts counters that need to be reset appear in the menu.

```
84.Reset Menu
      Drum
Select ▲▼ or OK
```

11 Press ▲ or ▼ to choose `Drum`.
Press **OK**.

12 Press **1** to reset the drum unit counter.

13 Press **Stop/Exit**.

Replacing the belt unit

Order Number: BU-100CL

Change Parts Belt Unit message

When the belt unit runs out, the following message appears on the LCD. When you see this message, you must replace the belt unit:

```
Change Parts
Belt Unit
```

CAUTION

DO NOT touch the surface of the belt unit. If you touch it, it could degrade print quality.

Damage caused by improper handling of the belt unit may void your warranty.

Replacing the belt unit

1 Turn off the machine's power switch. Press the front cover release button and then open the front cover.

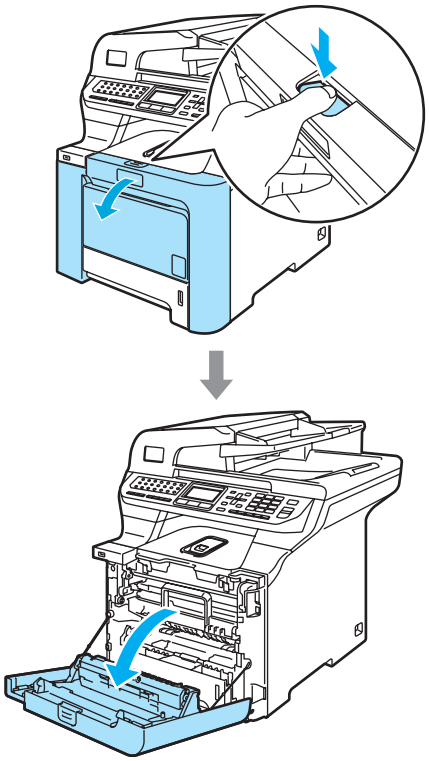

2 Hold the green handle of the drum unit. Lift the drum unit up and then pull it out until it stops.

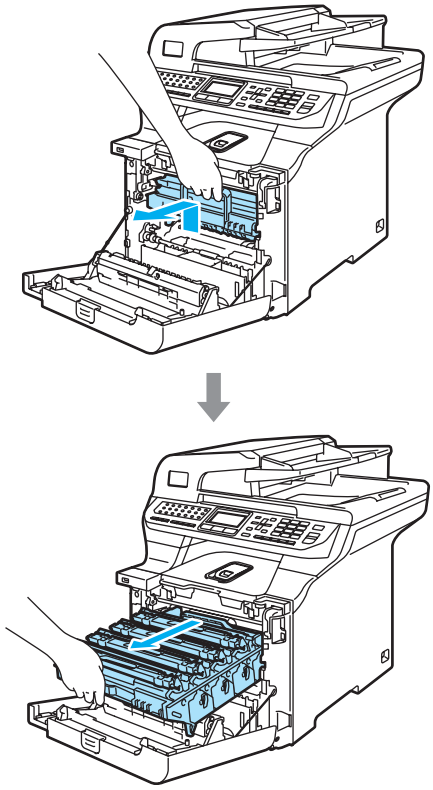

3 Release the grey lock lever (1) that is on the left side of the machine. Lift the front of the drum unit and pull the drum unit completely out of the machine using the green handles on the drum unit.

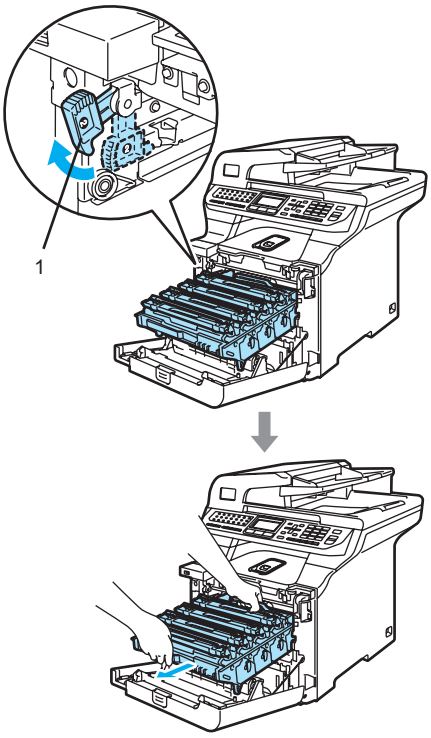

CAUTION

Make sure that you use the drum unit handles when carrying it. DO NOT hold the sides of the drum unit.

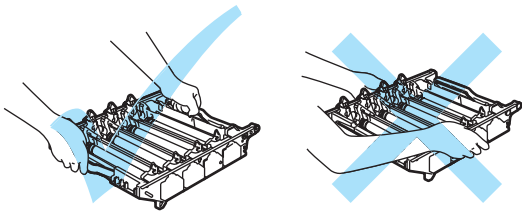

We recommend that you place the drum unit on a flat surface protected by a piece of disposable paper or cloth in case of toner scatter or spillage.

To prevent damage to the machine from static electricity, DO NOT touch the electrodes shown in the illustration.

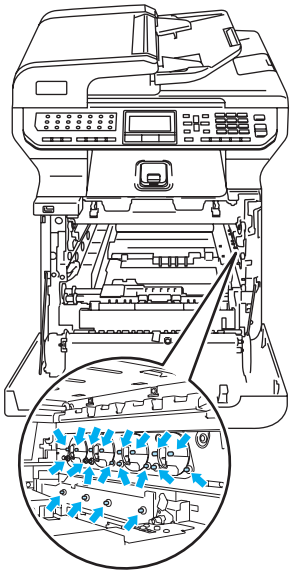

4 Hold the green parts of the belt unit with both hands and lift the belt unit up, then pull it out.

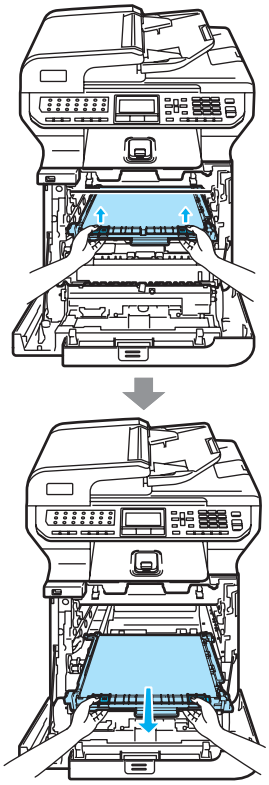

CAUTION

We recommend that you place the belt unit on a flat surface protected by a piece of disposable paper or cloth in case of toner scatter or spillage.

5 Unpack the new belt unit, and remove the protective cover and paper.

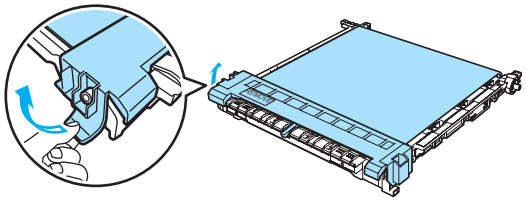

6 Put the new belt unit in the machine. Match the ↓ mark on the belt unit to the ↑ mark on the machine. Push down on the green area of the belt unit to lock it in place.

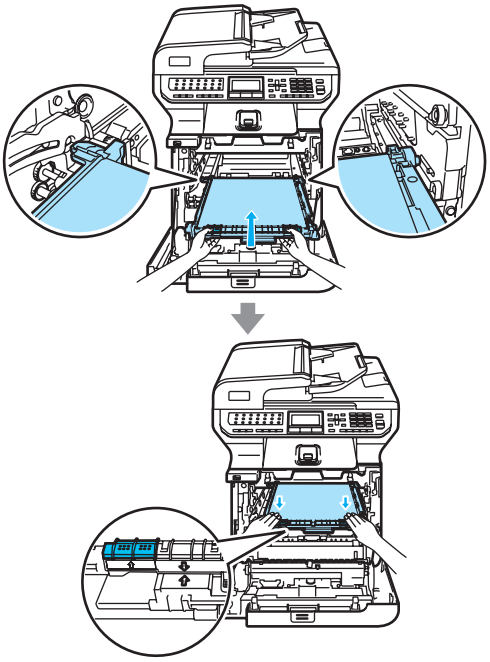

7 Put the drum unit back in the machine as follows.

1 Make sure that the grey lock lever (1) is in the up position and put the drum unit in the machine. Push down the grey lock lever (1).

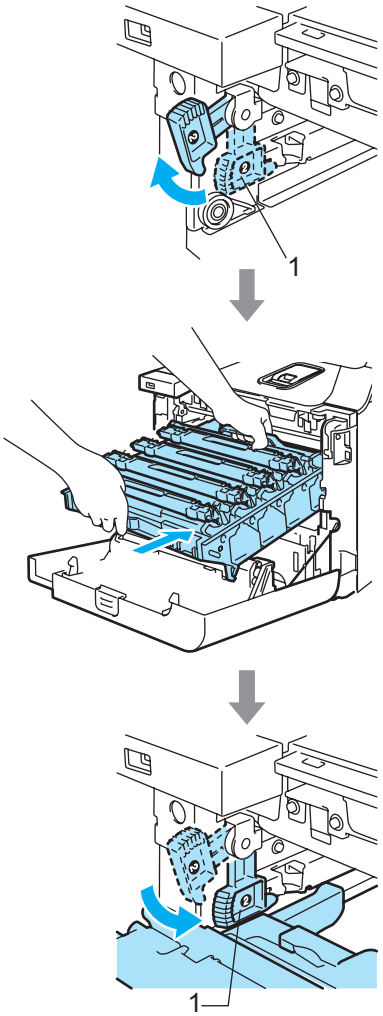

Note

When you put the drum unit in the machine, match the green guides (1) of the drum unit handle to the green arrows (2) on both sides of the machine.

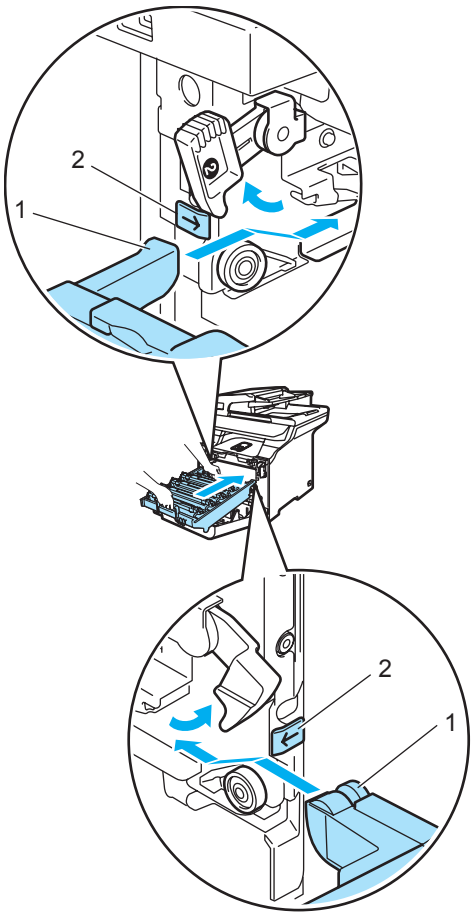

2 Push the drum unit in until it stops.

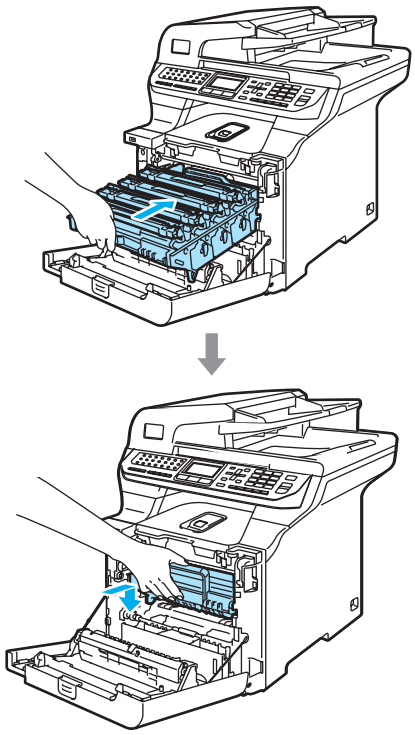

8 Close the front cover of the machine.

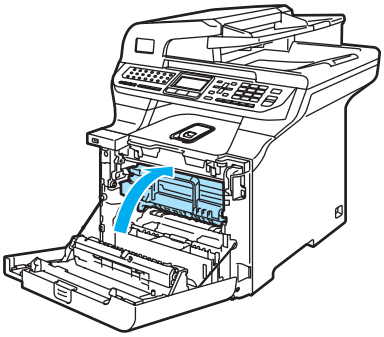

When you replace the belt unit with a new one, you need to reset the belt unit counter by completing the following steps:

9 Turn on the machine's power switch.

C

10 Press **Menu**, **8**, **4**.
Only the parts counters that need to be reset appear in the menu.

11 Press ▲ or ▼ to choose `Belt Unit`.
Press **OK**.

12 Press **1** to reset the belt unit counter.

13 Press **Stop/Exit**.

Replacing the waste toner box

Order Number: WT-100CL

Change Parts Waste Toner Box message

After you have printed approximately 20,000 images at 5% coverage for CMYK each, you must change the waste toner box. The actual number of printed pages will vary depending on the print jobs and paper you use.

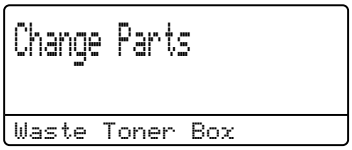

Waste Toner Box Full message

When the waste toner box is full, the following message appears on the LCD and the machine will stop printing. When you see this message, you must replace the toner box:

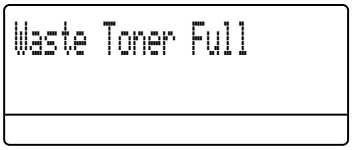

WARNING

DO NOT reuse the waste toner box.

Replacing the waste toner box

WARNING

DO NOT put the waste toner box into a fire. It could explode.

Be careful not to spill the toner. DO NOT inhale or allow it to get into your eyes.

CAUTION

Handle the waste toner box carefully. If toner scatters on your hands or clothes, wipe or wash it off with cold water at once.

1 Press the front cover release button and then open the front cover.

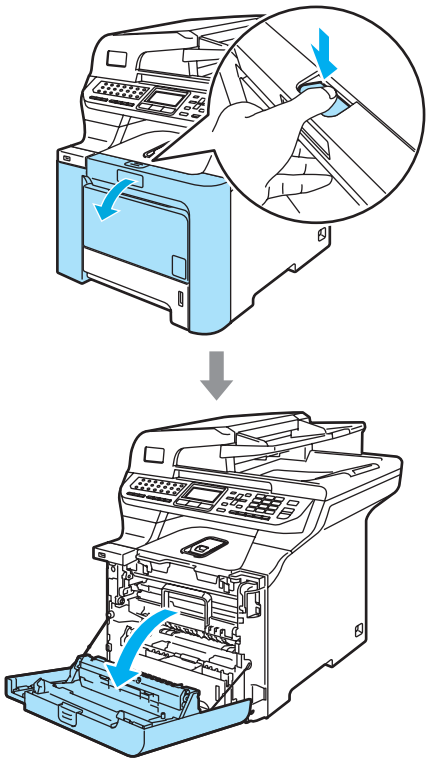

2 Hold the green handle of the drum unit. Lift the drum unit up and then pull it out until it stops.

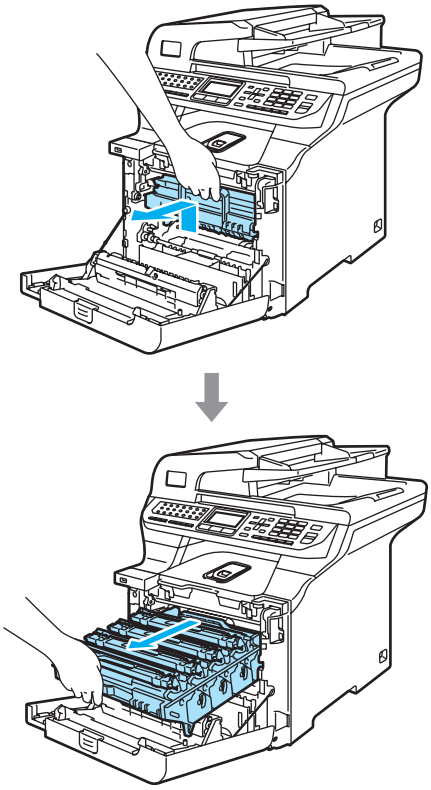

3 Release the grey lock lever (1) that is on the left side of the machine. Lift the front of the drum unit and pull the drum unit completely out of the machine using the green handles on the drum unit.

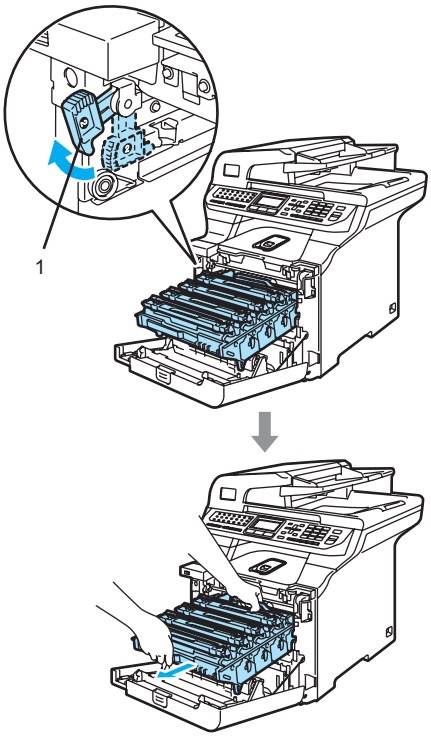

CAUTION

Make sure that you use the drum unit handles when carrying it. DO NOT hold the sides of the drum unit.

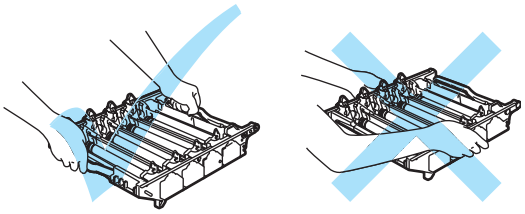

We recommend that you place the drum unit on a flat surface protected by a piece of disposable paper or cloth in case of toner scatter or spillage.

If toner scatters on your hands or clothes, wipe or wash it off with cold water at once.

To prevent damage to the machine from static electricity, DO NOT touch the electrodes shown in the illustration.

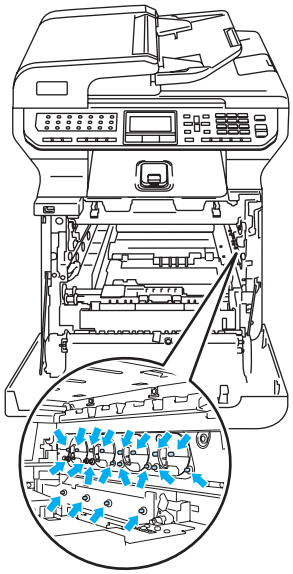

4 Hold the green parts of the belt unit with both hands and lift the belt unit up, then pull it out.

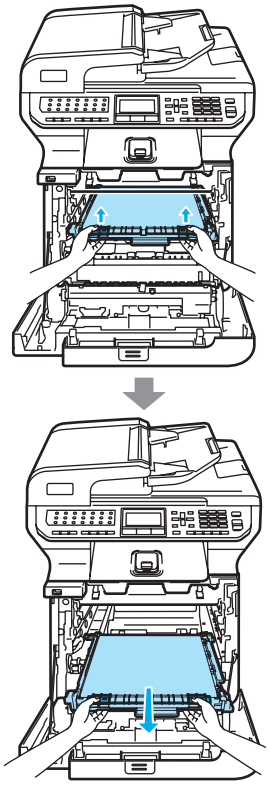

CAUTION

We recommend that you place the belt unit on a clean, flat surface with a piece of disposable paper underneath it in case you accidentally spill or scatter toner.

5 Remove the waste toner box from the machine using the green handle.

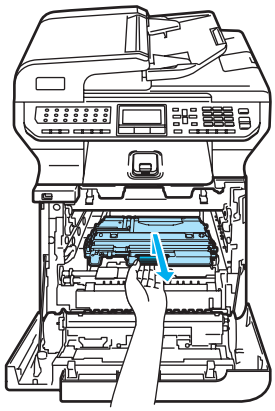

Note

Discard the used waste toner box according to local regulations, keeping it separate from domestic waste. If you have questions, call your local waste disposal office.

6 Unpack the new waste toner box and put the new one in the machine using the green handle.

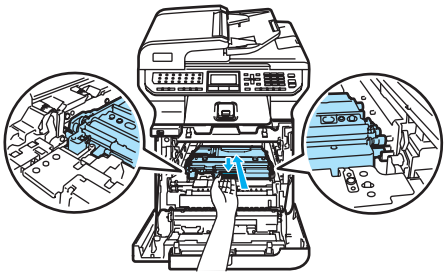

C

7 Put the belt unit back in the machine. Match the ↓ mark on the belt unit to the ↑ mark on the machine. Push down on the green area of the belt unit to lock it in place.

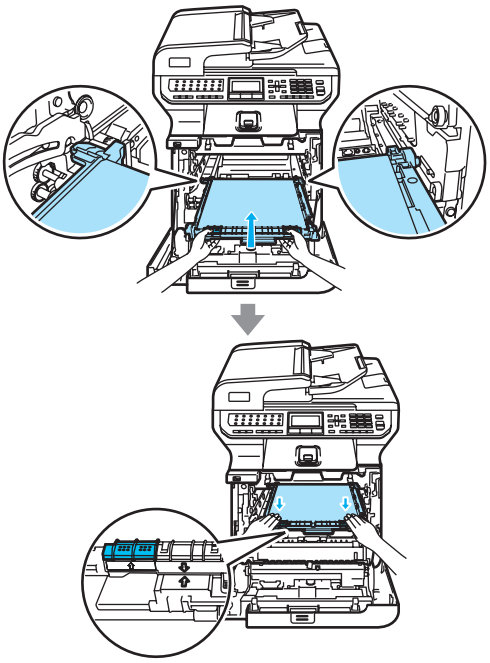

8 Put the drum unit back in the machine as follows.

1 Make sure that the grey lock lever (1) is in the up position and put the drum unit in the machine. Push down the grey lock lever (1).

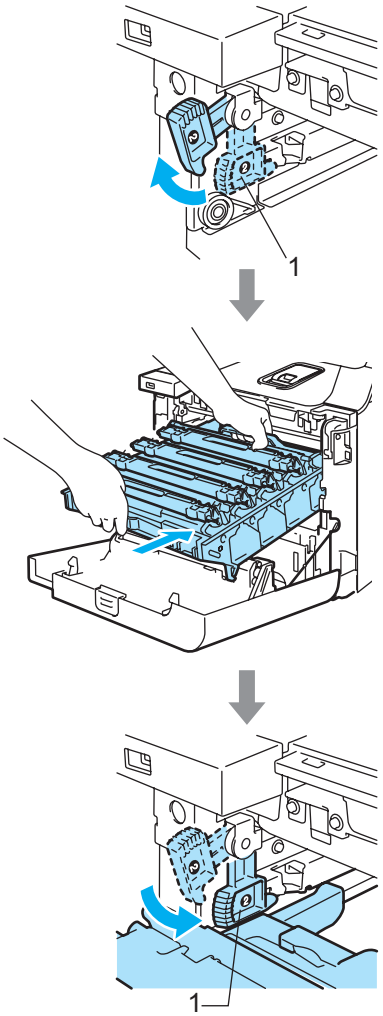

Note

When you put the drum unit in the machine, match the green guides (1) of the drum unit handle to the green arrows (2) on both sides of the machine.

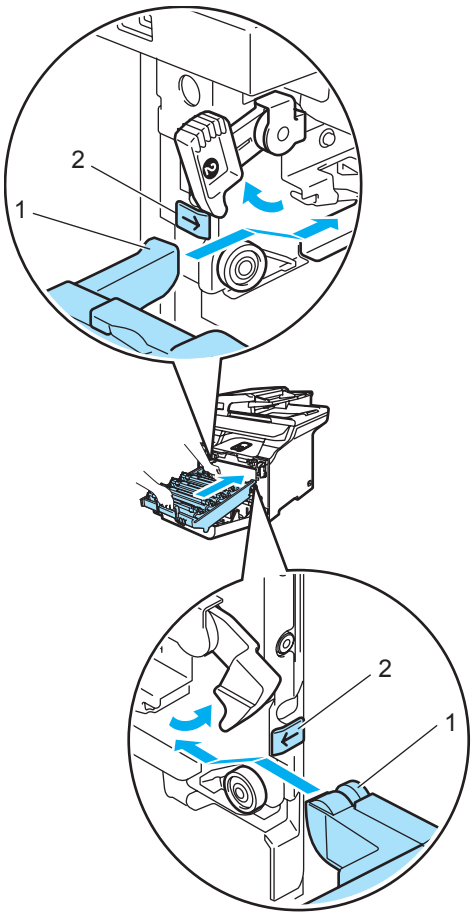

2 Push the drum unit in until it stops.

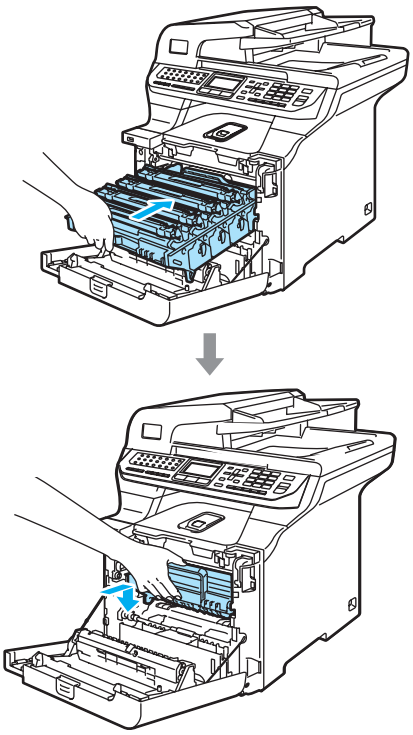

9 Close the front cover of the machine.

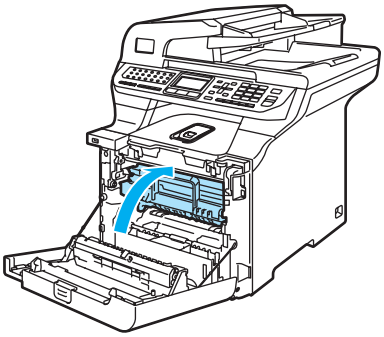

Packing and shipping the machine

If for any reason you must move or ship your machine, carefully re-pack the machine in the original packing material to avoid any damage during transport. If you do not pack the machine properly, you could void your warranty. The machine should be adequately insured with the carrier.

If the machine must be shipped, please read the instructions in this section which explains how to properly prepare your machine for transport.

WARNING

Once your machine has been set up and used, we do not recommend that it be moved or shipped unless absolutely necessary.

Colour laser printers are complex printing devices. Moving the machine or shipping it without properly removing the installed supplies can result in SEVERE damage to the machine. As a result, your machine may not operate properly afterwards.

Failure to properly prepare the machine for shipping according to the instructions in this section may
VOID YOUR WARRANTY.

To prevent injuries when moving or lifting this machine, make sure at least two people lift the machine together. Be careful not to pinch your fingers when you put the machine down.

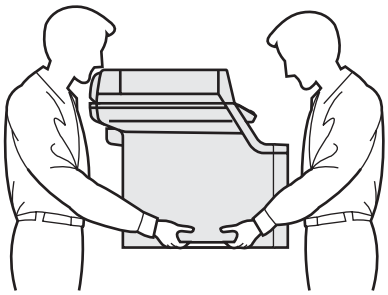

Make sure that you have the following parts for repacking:

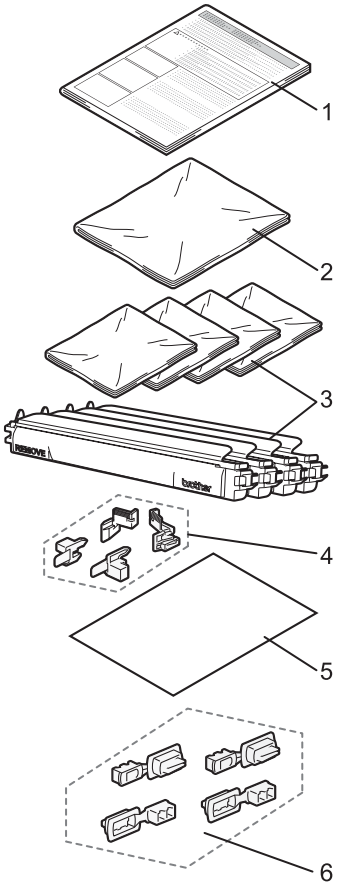

1 **Insertion sheet for repacking**

2 **Plastic bag for the waste toner box**

3 **Orange protective cover and plastic bag that the toner cartridge originally came in (4 pieces of each)**

4 **Orange packing material for locking the drum unit and the belt unit (4 pieces)**

5 **A piece of paper (Letter or A4) to protect the belt unit (supplied by the user)**

6 **Joints for attaching cartons (pieces)**

Repacking the machine

1. Turn off the machine's power switch. Unplug the telephone line cord first, and then unplug the power cord from the AC power outlet.

2. Push the Scanner Lock Lever down to lock the scanner.
This lever is located on the left of the scanner glass.

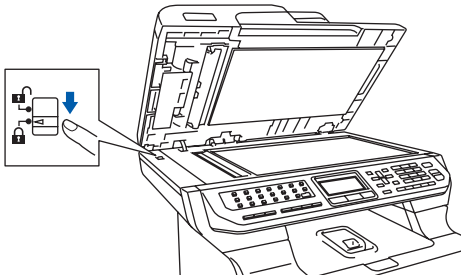

3. Press the front cover release button and then open the front cover.

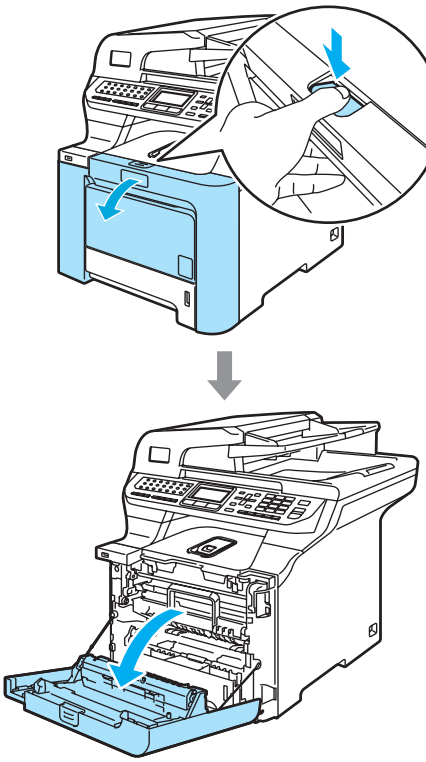

4. Hold the green handle of the drum unit. Lift the drum unit up and then pull it out until it stops.

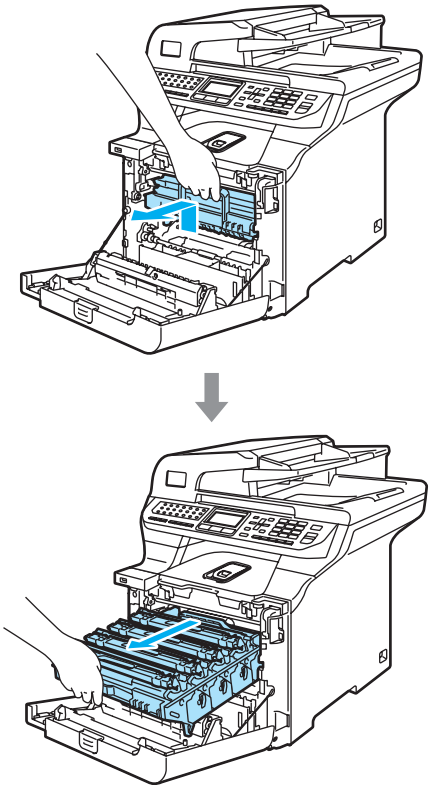

C

5 Release the grey lock lever (1) that is on the left side of the machine. Lift the front of the drum unit and pull the drum unit completely out of the machine using the green handles on the drum unit.

CAUTION

Hold the handles of the drum unit when you carry it. DO NOT hold the sides of the drum unit.

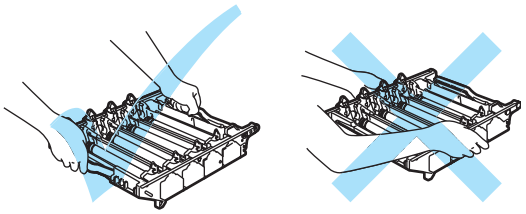

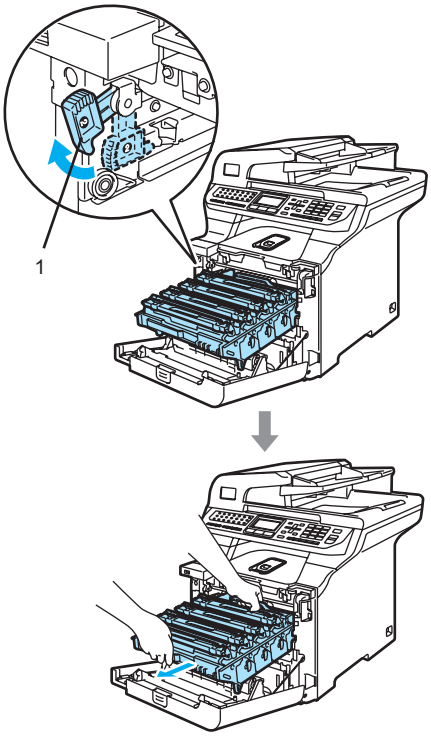

CAUTION

We recommend that you place the drum unit on a clean, flat surface with a piece of disposable paper underneath it in case of you accidentally spill or scatter toner.

6 Hold the handle of the toner cartridge and pull it out of the drum unit. Repeat this for all of the toner cartridges.

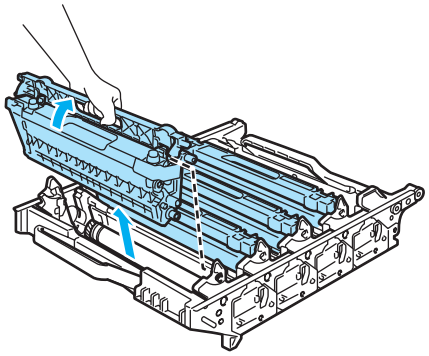

CAUTION

We recommend that you place the toner cartridges on a clean, flat surface with a piece of disposable paper underneath it in case of you accidentally spill or scatter toner.

7 Attach the original orange protective cover to each of the toner cartridges. Place each of the toner cartridges into the plastic bag that the cartridge originally came in.

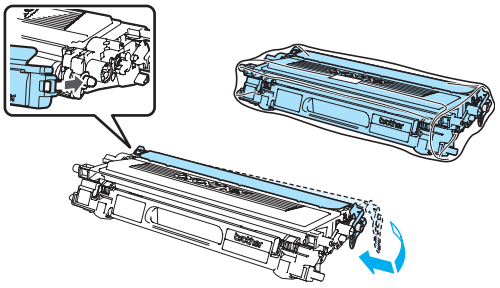

8 Hold the green parts of the belt unit with both hands and lift the belt unit up, then pull it out.

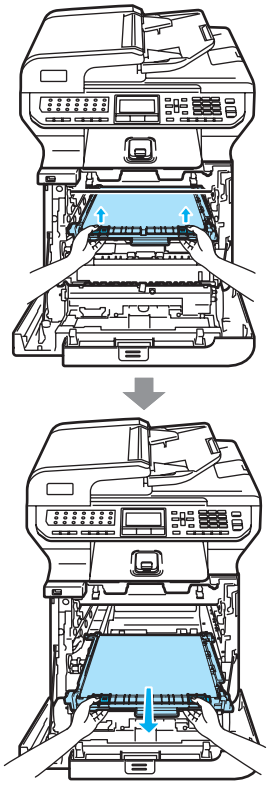

CAUTION

We recommend that you place the belt unit on a clean, flat surface with a piece of disposable paper underneath it in case of you accidentally spill or scatter toner.

9 Remove the waste toner box from the machine using the green handle and place it into the plastic bag included in the carton.

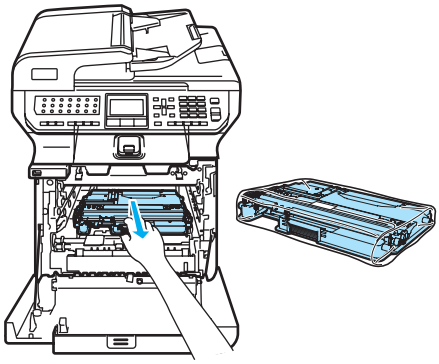

10 Put the belt unit back in the machine. Match the ↓ mark on the belt unit to the ↑ mark on the machine. Push down on the green area of the belt unit to lock it in place.

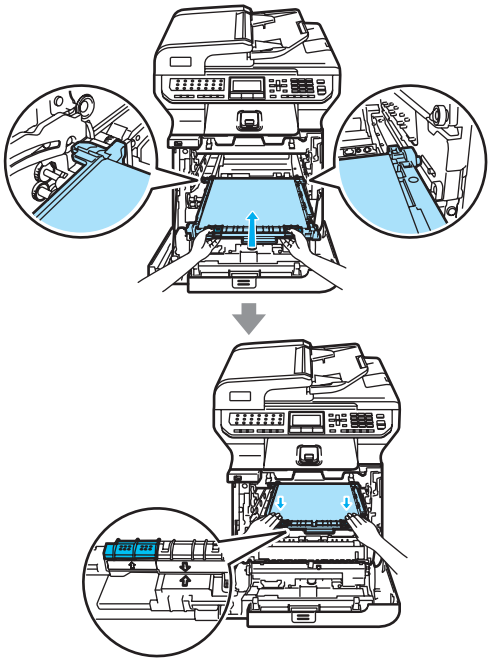

C

⓫ Insert the original orange packing material for locking the belt unit as shown in the illustration.

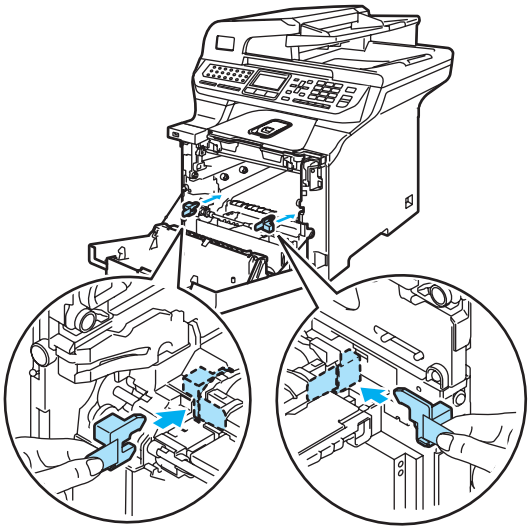

⓬ Put a piece of paper (letter or A4) on the belt unit to prevent damage to the belt unit.

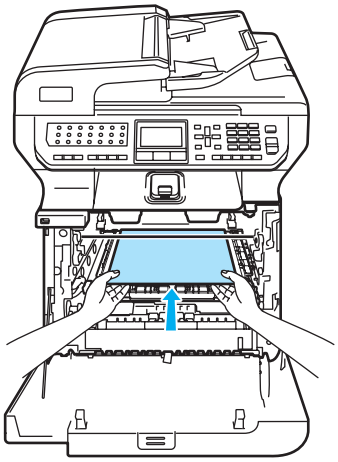

⓭ Put the drum unit back in the machine as follows.

1 Make sure that the grey lock lever (1) is in the up position and put the drum unit in the machine. Push down the grey lock lever (1).

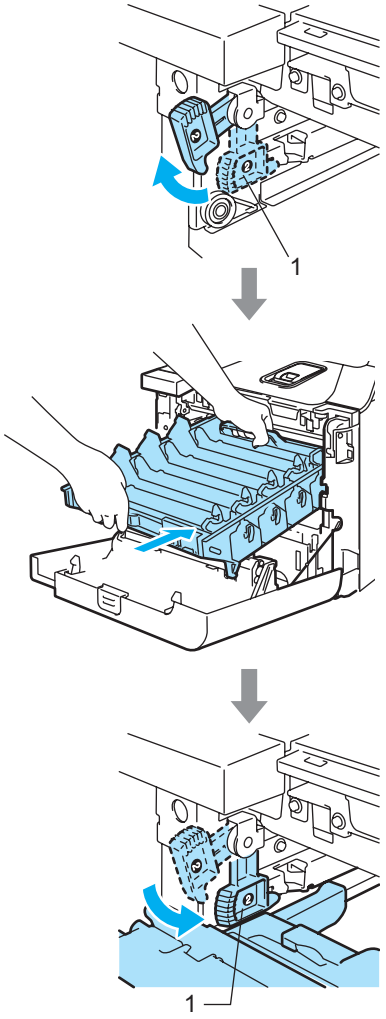

Note

When you put the drum unit in the machine, match the green guides (1) of the drum unit handle to the green arrows (2) on both sides of the machine.

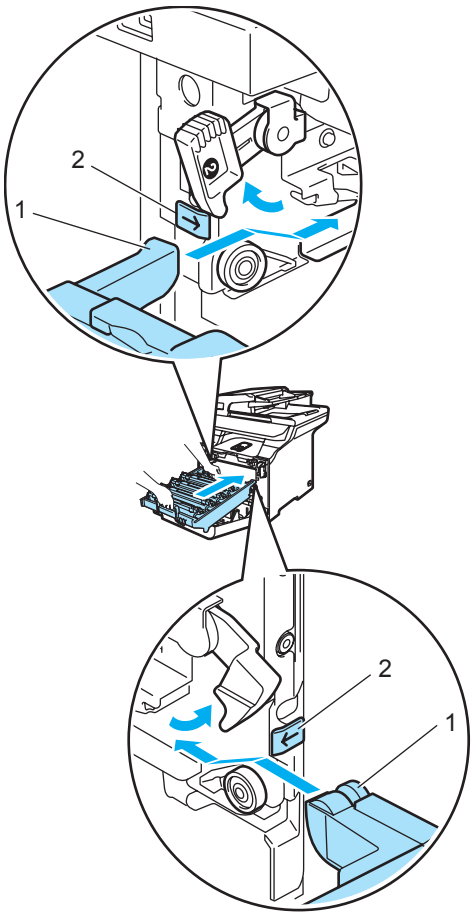

2 Push the drum unit back in until it stops.

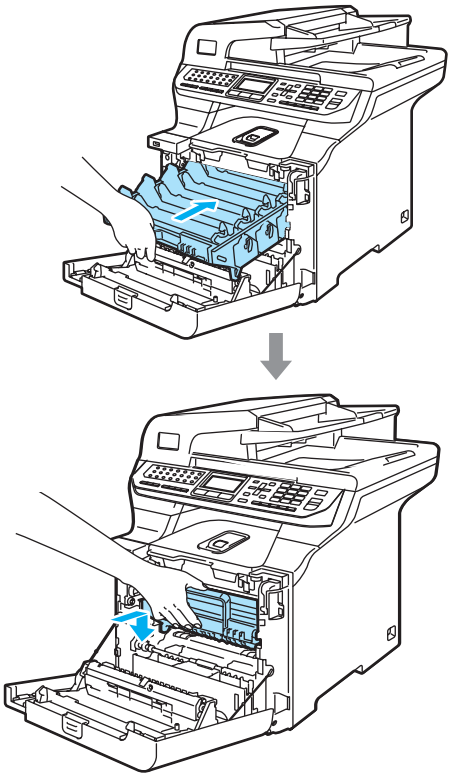

14 Insert the original orange packing material for the drum unit until as shown in the illustration, and then close the front cover.

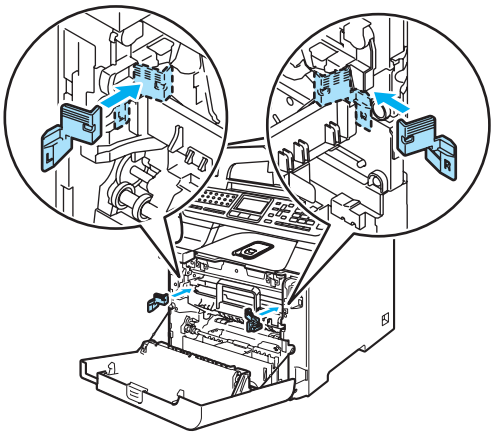

C

15

Note

We recommend you repack the machine on a table or desk.

Put the styrofoam piece marked “FRONT” (1) into the lower carton (3), so that the arrow cutout (4) points toward it. Put the styrofoam piece marked “REAR” into the lower carton so that the arrow cutout (4) points away from it.

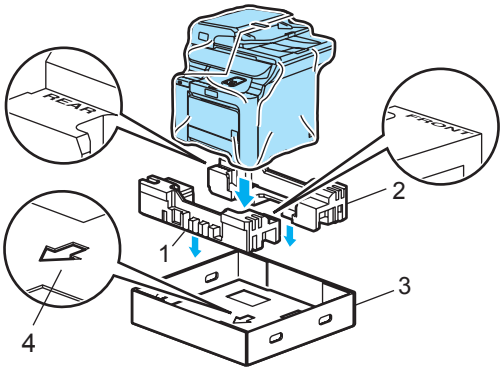

16 Using two people, place the machine into the plastic bag and then into the lower carton, matching the “FRONT” piece to the front of the machine as shown in the illustration in Step 15.

17 As shown in the illustration, fit the two foam pieces marked “FRONT” (4) to the cardboard piece marked “FRONT” (7). Fit the “REAR/L” (5) and “REAR/R” (6) foam pieces to the left and right of the cardboard piece marked “REAR” (8).

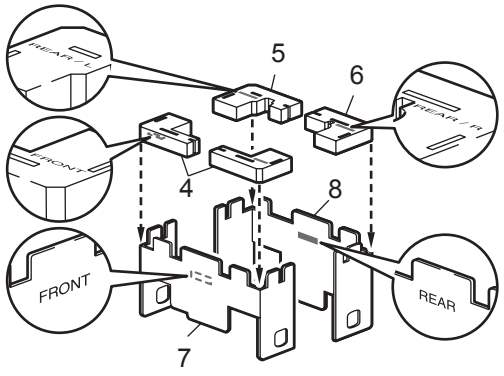

18 Put the assembled “FRONT” (1) and “REAR” (2) cardboard pieces in the lower carton at the front and rear of the machine as shown in the illustration. The foam pads should fit closely to the machine to support it.

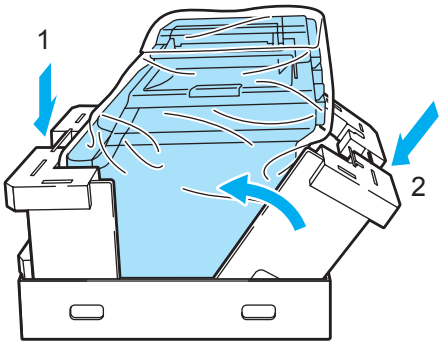

19 Place the upper carton (1) over the machine and the lower carton. Match the joint holes (2) of the upper carton to the joint holes (3) of the lower carton.

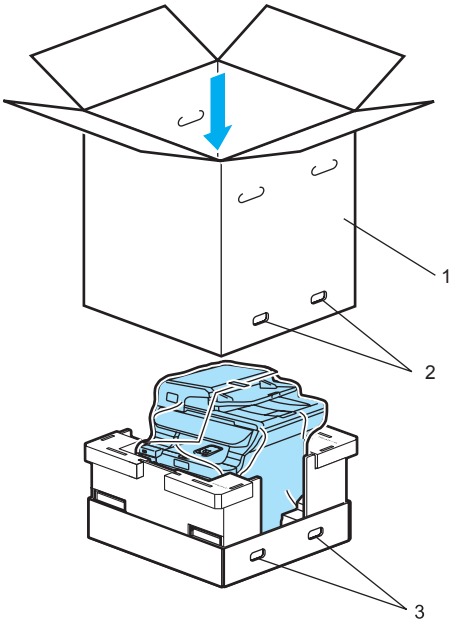

20 Put the two styrofoam pieces for the toner cartridges on the top of the machine. Match the right side of the machine to the “RIGHT” mark on one of the styrofoam pieces, and the left side of the machine to the “LEFT” mark on the other styrofoam piece. Put the toner cartridges in the styrofoam.

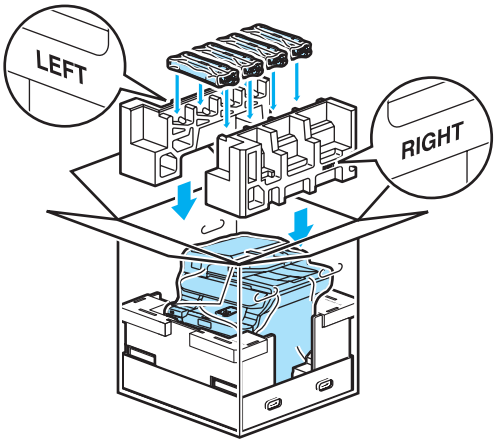

21 Put the carton tray (1) on the top. Match the front side of the machine to the ∆ marks on the carton tray.
Place the waste toner box in the right side of the carton tray.

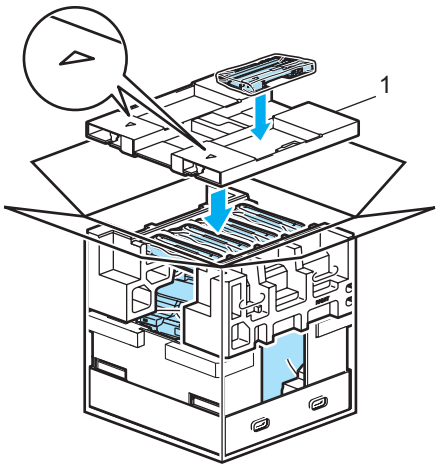

22 Put the four joints (1) into the holes of the carton using steps A and B as shown below.

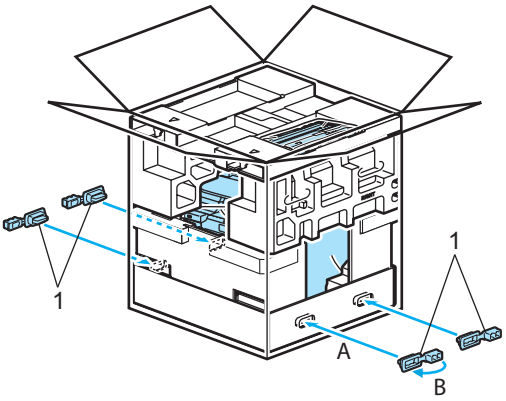

23 Close the carton and tape it shut.

C

Machine information

Checking the serial number

You can see the machine's serial number on the LCD.

1. Press **Menu**, **8**, **1**.

```
81.Serial No.

  XXXXXXXXXX
```

2. Press **Stop/Exit**.

Checking the page counters

You can see the machine's page counters for copies, printed pages, reports and lists, faxes or a summary total.

1. Press **Menu**, **8**, **2**.
   The LCD shows number of pages for `Total`, `Fax/List` and `Copy`.

```
82.Page Counter
▲    Total     :XXXXXX
     Fax/List  :XXXXXX
▼    Copy      :XXXXXX
Select ▲▼ or OK
```

2. Press ▲ or ▼ to choose to see number of pages for `Print`.

```
82.Page Counter
▲    Fax/List  :XXXXXX
     Copy      :XXXXXX
▼    Print     :XXXXXX
Select ▲▼ or OK
```

3. Press ▲ or ▼ to choose the option for which you want to see the machine's page counters for colour and black & white.
   Press **OK**.

```
82.Page Counter
  Total
     Color     :XXXXXX
     B&W       :XXXXXX
```

4. Press **Stop/Exit**.

Checking the remaining life of parts

You can view the remaining life of these parts on the LCD.

1. Press **Menu**, **8**, **3**.

```
83.Parts Life
  1.Drum
  2.Belt Unit
  3.PF kit MP
Select ▲▼ or OK
```

2. Press ▲ or ▼ to choose `1.Drum`, `2.Belt Unit`, `3.PF kit MP`, `4.PF kit 1`, `5.PF kit 2` [1], `6.Fuser` or `7.Laser`.
   Press **OK**.

```
83.Parts Life
  1.Drum

  Remaining:100%
```

[1] `PF kit 2` appears only when the optional LT-100CL tray is installed.

3. Press **Stop/Exit**.

Note

The life check of a part will be accurate only if that part's life counter was reset when the new part was installed. It will not be accurate if that part's life counter was reset during the life of the used part.

D Menu and features

On-screen programming

Your machine has been designed to be easy to use. The LCD provides on-screen programming using the menu keys.

We have created step by step on-screen instructions to help you program your machine. Simply follow the steps as they guide you through the menu selections and programming options.

Menu table

You can program your machine by using the *Menu table* on page 203. These pages list the menu selections and options.

Press **Menu** followed by the menu numbers to program your machine.

For example, to set Beeper volume to Low:

1. Press **Menu**, **1**, **4**, **2**.
2. Press ▲ or ▼ to choose Low.
3. Press **OK**.

Memory storage

Your menu settings are stored permanently, and in the event of a power failure will *not* be lost. Temporary settings (for example, Contrast, Overseas Mode) *will* be lost. Your machine can store the date and time for approximately 60 hours.

Menu keys

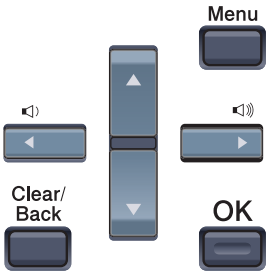

Menu	Access the menu.
OK	Go to the next menu level. Accept an option.
Clear/ Back	Exit the menu by pressing repeatedly. Go back to the previous menu level.
	Scroll through the current menu level.
	Go back to the previous menu level or forward to the next menu level.
Stop/Exit	Exit the menu.

How to access the menu mode

1. Press **Menu**.
2. Choose an option.
   - Press **1** for General Setup menu.
   - Press **2** for Fax menu.
   - Press **3** for Copy menu.
   - Press **4** for Printer menu.
   - Press **5** for USB Direct I/F menu.
   - Press **6** for Print Reports menu.
   - Press **7** for LAN menu.
   - Press **8** for Machine Info. menu.
   - Press **9** for Service menu. [1]
   - Press **0** for Initial Setup.

   [1] This will appear only when the LCD shows an error message.

   You can also scroll through each menu level by pressing ▲ or ▼ for the direction you want.
3. Press **OK**.
   The LCD will then show the next menu level.
4. Press ▲ or ▼ to scroll to your next menu selection.
5. Press **OK**.
   When you have finished setting an option, the LCD shows `Accepted`.
6. Press **Stop/Exit** to return to the top menu.

Menu table

The factory settings are shown in bold with an asterisk.

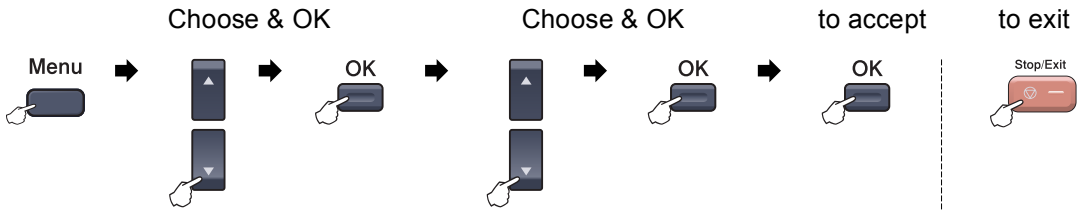

Main Menu	Submenu	Menu Selections	Options	Descriptions	Page
1.General Setup	1.Mode Timer	—	0 Sec 30 Secs 1 Min **2 Mins*** 5 Mins Off	Sets the time to return to Fax mode and the time the machine will change from individual user to public user when using Secure Function Lock.	22 32
	2.Paper Type	1.MP Tray	Thin **Plain*** Thick Thicker Recycled Paper	Sets the type of paper in the MP tray.	22
		2.Tray#1	Thin **Plain*** Recycled Paper	Sets the type of paper in the paper tray.	22
		3.Tray#2 (This menu only appears if you have the optional tray #2)	Thin **Plain*** Recycled Paper	Sets the type of paper in the optional paper tray #2.	22
	3.Paper Size	1.MP Tray	**A4*** Letter Legal Executive A5 A6 B5 B6 Folio Any	Sets the size of the paper in the MP tray.	23

Main Menu	Submenu	Menu Selections	Options	Descriptions	Page
1.General Setup (continued)	**3.Paper Size** (continued)	**2.Tray#1**	**A4*** Letter Legal Executive A5 A6 B5 B6 Folio	Sets the size of the paper in the paper tray.	23
		3.Tray#2 (This menu only appears if you have the optional tray #2)	**A4*** Letter Legal Executive A5 B5 B6 Folio	Sets the size of the paper in the optional paper tray #2.	23
	4.Volume	**1.Ring**	Off Low **Med*** High	Adjusts the ring volume.	25
		2.Beeper	Off Low **Med*** High	Adjusts the volume level of the beeper.	25
		3.Speaker	Off Low **Med*** High	Adjusts the speaker volume.	25
	5.Auto Daylight	—	**On*** Off	Changes for Daylight Savings Time automatically.	26
	6.Ecology	**1.Toner Save**	On **Off***	Increases the page yield of the toner cartridge.	26
		2.Sleep Time	(000-240) **005Min***	Conserves power.	26

Main Menu	Submenu	Menu Selections	Options	Descriptions	Page
1.General Setup (continued)	7.Tray Use	1.Copy	Tray#1 Only Tray#2 Only MP Only **MP>T1>T2*** T1>T2>MP (Tray#2 or T2 appears only if you installed the optional paper tray.)	Selects the tray that will be used for Copy mode.	23
		2.Fax	Tray#1 Only Tray#2 Only MP Only MP>T1>T2 **T1>T2>MP*** (Tray#2 or T2 appears only if you installed the optional paper tray.)	Selects the tray that will be used for Fax mode.	24
		3.Print	Tray#1 Only Tray#2 Only MP Only **MP>T1>T2*** T1>T2>MP (Tray#2 or T2 appears only if you installed the optional paper tray.)	Selects the tray that will be used for PC print.	24
	8.LCD Contrast	—	-□□□□■+ -□□□■□+ **-□□■□□+*** -□■□□□+ -■□□□□+	Adjusts the contrast of the LCD.	27
	9.Security	1.Setting Lock	—	Stops unauthorized users from changing the machine's current setting.	28
		2.Function Lock	—	You can restrict selected machine operation for up 25 individual users and all other non-authorized Public users.	28
	0.Document Scan	1.Glass ScanSize	**A4/Letter*** Legal/Folio	Adjusts the scan area of the scanner glass to the size of the document.	36
		2.Duplex Scan	**Long edge*** Short edge	Choose the duplex scanning format.	35

Main Menu	Submenu	Menu Selections	Options	Descriptions	Page
2.Fax	1.Setup Receive (In Fax mode only)	1.Ring Delay	(00-08) **02*** (Example for the UK)	Sets the number of rings before the machine answers in Fax Only or Fax/Tel mode.	46
		2.F/T Ring Time	20 Secs **30 Secs*** 40 Secs 70 Secs	Sets the pseudo/double-ring time in Fax/Tel mode.	46
		3.Fax Detect	**On*** Off	Receives fax messages without pressing **Mono Start** or **Colour Start**.	47
		4.Remote Codes	On (✱51, #51) **Off***	Allows you to answer all calls at an extension or external telephone and use codes to turn the machine on or off. You can personalize these codes.	55
		5.Auto Reduction	**On*** Off	Cuts the size of incoming faxes.	48
		6.Memory Receive	**On*** Off	Automatically stores any incoming faxes in its memory if it runs out of paper.	49
		7.Print Density	-□□□□■+ -□□□■□+ **-□□■□□+ *** -□■□□□+ -■□□□□+	Makes printouts darker or lighter.	47
		8.Polling RX	**Standard*** Secure Timer	Sets up your machine to poll another fax machine.	71
		9.Fax Rx Stamp (B&W only)	On **Off***	Prints the received time and date on the top of the received faxes.	48
		0.Duplex	On **Off***	Prints received faxes on both sides of the paper.	48

Main Menu	Submenu	Menu Selections	Options	Descriptions	Page
2.Fax (continued)	**2.Setup Send** (In Fax mode only)	**1.Contrast**	**Auto*** Light Dark	Changes the lightness or darkness of faxes you send.	39
		2.Fax Resolution	**Standard*** Fine S.Fine (B&W only) Photo (B&W only)	Sets the default resolution for outgoing faxes.	40
		3.Delayed Fax (B&W only)	—	Sets the time of day in 24 hour format that the delayed faxes will be sent.	42
		4.Batch TX (B&W only)	On **Off***	Combines delayed faxes going to the same fax number at the same time of day into one transmission.	42
		5.Real Time TX	Next Fax:On Next Fax:Off On **Off***	Sends a fax without using the memory.	41
		6.Polled TX	**Standard*** Secure	Sets up your machine with a document to be retrieved by another fax machine.	73
		7.Coverpg Setup (B&W only)	Next Fax:On Next Fax:Off On **Off*** Print Sample	Automatically sends a cover page you have programmed.	38
		8.Coverpage Note (B&W only)	—	Sets up your own comments for the fax cover page.	38
		9.Overseas Mode	On **Off***	If you are having difficulty sending faxes overseas, set this to on.	42
	3.Set Quick-Dial	**1.One-Touch Dial**	—	Stores up to 40 One-Touch Dial numbers, so you can dial by pressing one key (and **Mono Start** or **Colour Start**).	59
		2.Speed-Dial	—	Stores up to 300 Speed-Dial numbers, so you can dial by pressing only a few keys (and **Mono Start** or **Colour Start**).	60
		3.Setup Groups	—	Sets up to 20 Group numbers for Broadcasting.	62

Main Menu	Submenu	Menu Selections	Options	Descriptions	Page
2.Fax (continued)	4.Report Setting	1.XMIT Report	On On+Image **Off*** Off+Image	Sets initial setup for Transmission Verification Report and Fax Journal.	75
		2.Journal Period	Off **Every 50 Faxes*** Every 6 Hours Every 12 Hours Every 24 Hours Every 2 Days Every 7 Days	Sets the interval for automatic printing of the Fax Journal.	75
	5.Remote Fax Opt	1.Forward/Store (Backup Print)	**Off*** Fax Forward Fax Storage PC Fax Receive	Sets the machine to forward fax messages, to store incoming faxes in the memory (so you can retrieve them while you are away from your machine), or to send faxes to your PC. If you chose Fax Forward or PC Fax Receive, you can turn on the safety feature Backup Print.	64
		2.Remote Access	---*	Sets your own code for Remote Retrieval.	67
		3.Print Document	—	Prints incoming faxes stored in the memory.	49
	6.Remaining Jobs	—	—	You can check which jobs are in the memory and lets you cancel scheduled jobs.	43
	0.Miscellaneous	1.Compatibility	**High*** Normal Basic(for VoIP)	Adjusts the equalization for transmission difficulties. VoIP service providers offer fax support using various standards. If you regularly experience fax transmission errors, choose Basic(for VoIP).	130
		2.BT Call Sign (U.K. only)	**Off*** Set	Uses with BT Call Sign.	51

Main Menu	Submenu	Menu Selections	Options	Descriptions	Page
3.Copy	1.Quality	—	**Auto*** Text Photo	You can choose the Copy resolution for your type of document.	79
	2.Brightness	—	-□□□□■+ -□□□■□+ **-□□■□□+ *** -□■□□□+ -■□□□□+	Adjusts the brightness for copies.	83
	3.Contrast	—	-□□□□■+ -□□□■□+ **-□□■□□+ *** -□■□□□+ -■□□□□+	Adjusts the contrast for copies.	84
	4.Color Adjust	1.Red	-□□□□■+ -□□□■□+ **-□□■□□+ *** -□■□□□+ -■□□□□+	Adjusts the red colour for copies.	84
		2.Green	-□□□□■+ -□□□■□+ **-□□■□□+ *** -□■□□□+ -■□□□□+	Adjusts the green colour for copies.	
		3.Blue	-□□□□■+ -□□□■□+ **-□□■□□+ *** -□■□□□+ -■□□□□+	Adjusts the blue colour for copies.	

Main Menu	Submenu	Menu Selections	Options	Descriptions	Page
4.Printer	1.Emulation	—	**Auto*** HP LaserJet BR-Script 3	Chooses the emulation mode.	*See Software User's Guide on the CD-ROM.*
	2.Print Options	1.Internal Font	—	Prints a list of the machine's internal fonts.	
		2.Configuration	—	Prints a list of the machine's printer settings.	
		3.Test Print	—	Prints a test page.	
	3.Duplex	—	**Off*** On(Long Edge) On(Short Edge)	Enables or disables duplex printing. You can also choose long edge or short edge duplex printing.	
	4.Output Color	—	**Auto*** Color B&W	Chooses colour or black & white printed documents. If you choose Auto, the machine selects a suitable option for the document (colour or B&W).	
	5.Reset Printer	1.Reset	—	Returns the PCL setting to the default settings.	
		2.Exit	—		

Main Menu	Submenu	Menu Selections	Options	Descriptions	Page
4.Printer (continued)	**6.Calibration**	—	Calibrate Reset	Adjusts the colour density or returns the colour calibration to the factory setting.	*See Software User's Guide on the CD-ROM.*
	7.Auto Regist.	**1.Registration**	1.Start	Adjust the print position of each colour automatically.	
			2.Exit		
		2.Frequency	Low **Medium*** High Off	Set the interval time you want to carry out the auto registration.	
	8.Manual Regist.	**1.Print Chart**	—	Print the chart to manually check the registration of the colours.	
		2.Set Regist.	1 Magenta Left 2 Cyan Left 3 Yellow Left 4 Magenta Center 5 Cyan Center 6 Yellow Center 7 Magenta Right 8 Cyan Right 9 Yellow Right	Sets the correction value on the chart you printed out from Print Chart.s	
5.USB Direct I/F	**1.Direct Print**	**1.Paper Size**	**A4*** Letter Legal Executive A5 A6 B5 B6 Folio	Sets the paper size when printing directly from the USB flash memory drive.	93
		2.Media Type	Thin **Plain*** Thick Thicker Recycled Paper	Sets the media type when printing directly from the USB flash memory drive.	93

D

Main Menu	Submenu	Menu Selections	Options	Descriptions	Page
5.USB Direct I/F (continued)	1.Direct Print (continued)	3.Multiple Page	**1in1*** 2in1 4in1 9in1 16in1 25in1 1 in 2x2 pages 1 in 3x3 pages 1 in 4x4 pages 1 in 5x5 pages	Sets the page style when printing multiple pages directly from the USB flash memory drive.	93
		4.Orientation	**Portrait*** Landscape	Sets the page orientation when printing directly from the USB flash memory drive.	93
		5.Collate	**On*** Off	Enables or disables the page collation when printing directly from the USB flash memory drive.	93
		6.Print Quality	**Normal*** Fine	Sets the print quality option when printing directly from the USB flash memory drive.	93
		7.PDF Option	**Document*** Document&Markup Document&Stamps	Sets the PDF option whether to print comments (Markup) or stamps in the PDF file along with the text.	93
		8.Index Print	**Simple*** Details	Sets the index print option, simple format or details.	93
	2.Scan to USB	1.Resolution	**Color 150 dpi*** Color 300 dpi Color 600 dpi B&W 200 dpi B&W 200x100 dpi	Sets the resolution to send the scanned data to USB flash memory drive.	*See Software User's Guide on the CD-ROM.*
		2.File Name	—	Enter the file name of the scanned data.	
	3.PictBridge	1.Paper Size	Letter **A4*** B5 A5 B6 A6	Sets the paper size when printing data from a camera with using PictBridge.	88

Main Menu	Submenu	Menu Selections	Options	Descriptions	Page
5.USB Direct I/F (continued)	3.PictBridge (continued)	2.Orientation	Letter A4 B5 A5 B6 A6 Then, you will choose: Portrait Landscape	Sets the page orientation when printing data from a camera using PictBridge. If you choose the paper size Letter, A4 or B5, Portrait will be chosen. If you choose A5, B6 or A6, Landscape will be chosen.	88
		3.Date & Time	On **Off***	Prints the date and time the photo is being taken on the photo.	88
		4.File Name	On **Off***	Prints the file name of the data on the photo.	88
		5.Print Quality	**Normal*** Fine	Sets the print quality option when printing data from a camera using PictBridge.	88
6.Print Reports	1.XMIT Verify	1.View on LCD	—	You can view the Transmission Verification Report for your last 200 outgoing faxes at most and print the last report.	76
		2.Print Report	—		
	2.Help List	—	—	Prints the Help List so you can see at-a-glance how to quickly program your machine.	76
	3.Tel Index List	1.Numeric	—	Lists name and numbers stored in the One-Touch and Speed-Dial memory, in numerical or alphabetical order.	76
		2.Alphabetic	—		
	4.Fax Journal	—	—	Lists information about your last 200 incoming and outgoing faxes. (TX means Transmit. RX means Receive.)	76
	5.User Settings	—	—	Lists your settings.	76
	6.Network Config	—	—	Lists your Network settings.	76
	7.Order Form	—	—	You can print an accessories order form to fill out and send to you Brother dealer.	76

Main Menu	Submenu	Menu Selections		Options	Descriptions	Page
7.LAN	1.Wired	1.TCP/IP	1.BOOT Method	**Auto*** Static RARP BOOTP DHCP	Chooses the BOOT method that best suits your needs.	*See Network User's Guide on the CD-ROM.*
			2.IP Address	[000-255]. [000-255]. [000-255]. [000-255]	Enter the IP address.	
			3.Subnet Mask	[000-255]. [000-255]. [000-255]. [000-255]	Enter the Subnet mask.	
			4.Gateway	[000-255]. [000-255]. [000-255]. [000-255]	Enter the Gateway address.	
			5.Node Name	BRNXXXXXX	Enter the Node name.	
			6.WINS Config	**Auto*** Static	Chooses the WINS configuration mode.	
			7.WINS Server	(Primary) 000.000.000.000 (Secondary) 000.000.000.000	Specifies the IP address of the primary or secondary WINS server.	
			8.DNS Server	(Primary) 000.000.000.000 (Secondary) 000.000.000.000	Specifies the IP address of the primary or secondary DNS server.	
			9.APIPA	**On*** Off	Automatically allocates the IP address from the link-local address range.	
			0.IPv6	On **Off***	Enable or Disable the IPv6 protocol. If you want to use the IPv6 protocol, visit http://solutions.brother.com for more information.	

Main Menu	Submenu	Menu Selections		Options	Descriptions	Page
7.LAN (continued)	1.Wired (continued)	2.Ethernet	—	**Auto*** 100B-FD 100B-HD 10B-FD 10B-HD	Chooses the Ethernet link mode.	*See Network User's Guide on the CD-ROM.*
		3.Set to Default	1.Reset	—	Restore the wired network setting to factory default.	
			2.Exit	—		
		4.Wired Enable	—	**On*** Off	Enable or Disable the wired LAN manually.	
	2.WLAN	1.TCP/IP	1.BOOT Method	**Auto*** Static RARP BOOTP DHCP	Chooses the BOOT method that best suits your needs.	
			2.IP Address	[000-255]. [000-255]. [000-255]. [000-255]	Enter the IP address.	
			3.Subnet Mask	[000-255]. [000-255]. [000-255]. [000-255]	Enter the Subnet mask.	
			4.Gateway	[000-255]. [000-255]. [000-255]. [000-255]	Enter the Gateway address.	
			5.Node Name	BRWXXXXXX	Enter the Node name.	
			6.WINS Config	**Auto*** Static	Chooses the WINS configuration mode.	
			7.WINS Server	(Primary) 000.000.000.000 (Secondary) 000.000.000.000	Specifies the IP address of the primary or secondary WINS server.	

D

Main Menu	Submenu	Menu Selections		Options	Descriptions	Page
7.LAN (continued)	**2.WLAN** (Continued)	**1.TCP/IP** (Continued)	**8.DNS Server**	(Primary) 000.000.000.000 (Secondary) 000.000.000.000	Specifies the IP address of the primary or secondary DNS server.	*See Network User's Guide on the CD-ROM.*
			9.APIPA	**On*** Off	Automatically allocates the IP address from the link-local address range.	
			0.IPv6	On **Off***	Enable or Disable the IPv6 protocol. If you want to use the IPv6 protocol, visit http://solutions.brother.com for more information.	
		2.Setup Wizard	—	—	You can configure your print server.	
		3.SecurEasySetup	—	—	You can configure the wireless network easily.	
		4.WLAN Status	**1.Status**	Active(11b) Active(11g) Wired LAN Active WLAN OFF Connection error	You can see the current wireless network status.	
			2.Signal	Strong Medium Weak None	You can see the current wireless network signal strength.	
			3.SSID	—	You can see the current SSID.	
			4.Comm. Mode	Ad-hoc Infrastructure	You can see the current Communication Mode.	
		5.Set to Default	**1.Reset**	—	Restore the wireless network setting to factory default.	
			2.Exit	—		
		6.**WLAN Enable**	—	On **Off***	Enable or Disable the wireless LAN manually.	

Main Menu	Submenu	Menu Selections		Options	Descriptions	Page
7.LAN (continued)	3.Setup IFAX	1.Setup Internet	1.Mail Address	—	Enter the mail address. (Up to 60 characters)	*See Network User's Guide on the CD-ROM.*
			2.SMTP Server	Name? (Up to 64 characters) IP Address? [000-255]. [000-255]. [000-255]. [000-255]	Enter the SMTP server address.	
			3.SMTP Port	[00001-65535]	Enter the POP3 port number.	
			4.Auth. For SMTP	**None*** SMTP-AUTH POP bef.SMTP	Selects the Security method for E-mail notification	
			5.POP3 Server	Name? (Up to 64 characters) IP Address? [000-255]. [000-255]. [000-255]. [000-255]	Enter the POP3 server address.	
			6.POP3 Port	[00001-65535]	Enter the POP3 port number.	
			7.Mailbox Name	—	Enter the mail box name. (Up to 32 characters)	
			8.Mailbox Pwd	—	Enter the password to login to the POP3 server. (Up to 32 characters)	
			9.APOP	On **Off***	Enables or disables APOP.	
		2.Setup Mail RX	1.Auto Polling	**On*** Off	Automatically checks the POP3 server for new messages.	
			2.Poll Frequency	10Min	Sets the interval for checking for new messages on the POP3 server.	
			3.Header	All Subject+From+To **None***	Selects the contents of the mail header to be printed.	
			4.Del Error Mail	**On*** Off	Deletes error mails automatically.	
			5.Notification	On MDN **Off***	Receives notification messages.	

D

Main Menu	Submenu	Menu Selections		Options	Descriptions	Page
7.LAN (continued)	3.Setup IFAX (continued)	3.Setup Mail TX	1.Sender Subject	—	Displays the subject that is attached to the Internet Fax data.	*See Network User's Guide on the CD-ROM.*
			2.Size Limit	On **Off***	Limits the size of E-mail documents.	
			3.Notification	On **Off***	Sends notification messages.	
		4.Setup Relay	1.Rly Broadcast	On **Off***	Relays a document to another fax machine.	
			2.Relay Domain	RelayXX:	Registers the Domain name.	
			3.Relay Report	On **Off***	Prints the Relay Broadcast Report.	
	4.Scan to E-mail	—	**Color 150 dpi*** Color 300 dpi Color 600 dpi B&W 200 dpi B&W 200x100 dpi	(If you chose color option) **PDF*** JPEG (If you chose B&W option) **PDF*** TIFF	Chooses the file format to send the scanned data via e-mail.	
	5.Scan to FTP	—	**Color 150 dpi*** Color 300 dpi Color 600 dpi B&W 200 dpi B&W 200x100 dpi	(If you chose color option) **PDF*** JPEG (If you chose B&W option) **PDF*** TIFF	Chooses the file format to send the scanned data via FTP.	
	6.Fax to Server	—	—	On **Off***	You can store a prefix/suffix address in the machine and can send a document from a fax server system.	
	7.Time Zone	—	—	UTCXXX:XX	Sets the time zone for your country.	
	0.Factory Reset	1.Reset	—	1.Yes 2.No	Restores all network settings to factory default.	
		2.Exit	—	—		

Main Menu	Submenu	Menu Selections	Options	Descriptions	Page
8.Machine Info.	1.Serial No.	—	—	You can check the serial number of your machine.	200
	2.Page Counter	—	Total Fax/List Copy Print	You can check the number of total pages the machine has printed during its life.	200
	3.Parts Life	1.Drum 2.Belt Unit 3.PF kit MP 4.PF kit 1 5.PF kit 2 6.Fuser 7.Laser	—	You can check the percentage of a machine part's life that remains available. PF kit 2 appears only when the optional LT-100CL tray is installed.	200
	4.Reset Menu	—	Drum Belt Unit PF kit MP PF kit 1 PF kit 2	Resets the machine part's life counter. Appears when you replace the machine part. PF kit 2 appears only when the optional LT-100CL tray is installed.	175 181
0.Initial Setup	1.Receive Mode	—	**Fax Only*** Fax/Tel External TAD Manual	Chooses the receive mode that best suits your needs.	44
	2.Date&Time	—	—	Puts the date and time on the LCD and in headings of faxes you send.	*See Quick Setup Guide.*
	3.Station ID	—	Fax: Tel: Name:	Sets your name and fax number to appear on each page you fax.	
	4.Tone/Pulse	—	**Tone*** Pulse	Chooses the dialling mode.	
	5.Dial Tone	—	Detection **No Detection***	You can shorten the dial tone detect pause.	130
	6.Phone Line Set	—	**Normal*** PBX ISDN	Selects the telephone line type.	50

Entering text

When setting certain menu selections, such as the Station ID, you will need to type text characters. The dial pad keys have letters printed on them. The keys: **0**, **#** and ∗ do *not* have printed letters because they are used for special characters.

Press the appropriate dial pad key the required number of times to access the characters below:

■ For setting an e-mail address, Scan to FTP menu options and Setup IFAX menu options (**Menu**, **7**, **3**)

Press Key	one time	two times	three times	four times	five times	six times	seven times	eight times
1	@	.	/	1	@	.	/	1
2	a	b	c	A	B	C	2	a
3	d	e	f	D	E	F	3	d
4	g	h	i	G	H	I	4	g
5	j	k	l	J	K	L	5	j
6	m	n	o	M	N	O	6	m
7	p	q	r	s	P	Q	R	S
8	t	u	v	T	U	V	8	t
9	w	x	y	z	W	X	Y	Z

■ For setting other menu selections

Press Key	one time	two times	three times	four times
2	A	B	C	2
3	D	E	F	3
4	G	H	I	4
5	J	K	L	5
6	M	N	O	6
7	P	Q	R	S
8	T	U	V	8
9	W	X	Y	Z

Inserting spaces

To enter a space in a fax number, press ▶ once between numbers. To enter a space in a name, press ▶ twice between characters.

Making corrections

If you entered a letter incorrectly and want to change it, press ◀ to move the cursor to the incorrect character, and then press **Clear/Back**.

Repeating letters

To enter a character on the same key as the previous character, press ▶ to move the cursor right before pressing the key again.

Special characters and symbols

Press ✳, **#** or **0**, then press ◀ or ▶ to move the cursor to the symbol or character you want. Press **OK** to choose it. The symbols and characters below will appear depending on your menu selection.

Press ✳	for	(space) ! " # $ % & ' ( ) ✳ + , - . / € [1]
Press **#**	for	: ; < = > ? @ [ ] ^ _ ¥ ~ ‘ | { }
Press **0**	for	Ä Ë Ö Ü À Ç È É 0

[1] € is not available for I-Fax settings.

E Specifications

General

Memory Capacity	128 MB
ADF (automatic document feeder)	Up to 50 pages (Staggered) 80 g/m^2 Duplex, up to Letter/A4 Recommended Environment for Best Results: Temperature: 20 to 30°C Humidity: 50% - 70% Paper: Xerox Premier 80 g/m^2 or Xerox Business 80 g/m^2
Paper Tray	250 Sheets (80 g/m^2)
Paper Tray 2 (option)	500 Sheets (80 g/m^2)
Printer Type	Laser
Print Method	Electrophotography by semiconductor laser beam scanning
LCD (liquid crystal display)	22 characters × 5 lines
Power Source	220 - 240V 50/60Hz
Power Consumption	Peak: Average 1200 W Copying: Average 515 W Sleep: Average 38 W Standby: Average 100 W
Dimensions	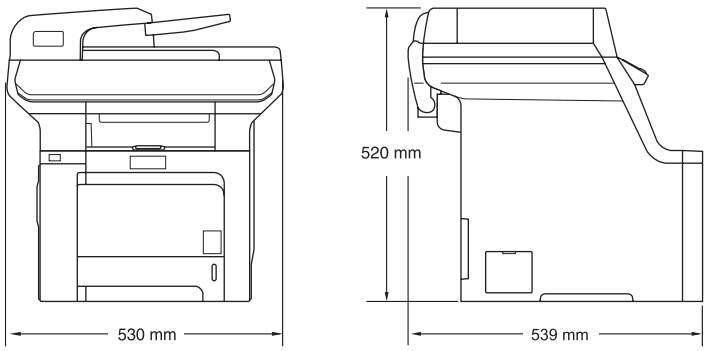
Weight	Without Drum/Toner Unit: 33.3 kg

Noise level	Sound power	
	Operating (Copying):	LWAd = 6.9 Bell
	Standby:	LWAd = 4.4 Bell
	Sound pressure	
	Operating (Copying):	LpAm = 54.5 dBA
	Standby:	LpAm = 30 dBA
Temperature	Operating:	10 to 32.5°C
	Storage:	5 to 35°C
Humidity	Operating:	20 to 80% (without condensation)
	Storage:	10 to 90% (without condensation)

Print media

Paper Input	**Paper Tray**	
	■ Paper Type:	Plain paper, Thin paper or Recycled paper
	■ Paper Size:	Letter, A4, B5, A5,B6, A6, Executive, Legal and Folio.
	■ Paper Weight:	60 to 105 g/m^2
	■ Maximum paper tray capacity:	Up to 250 sheets of 80 g/m^2 plain paper
	Multi-purpose tray (MP tray)	
	■ Paper Type:	Plain paper, Thin paper, Thick paper, Recycled paper, Bond paper, Envelopes or Labels
	■ Paper Size:	Width: 69.9 to 215.9 mm (2.75 to 8.5 in.) Length:116 to 406.4 mm (4.57 to 16 in.)
	■ Paper Weight:	60 to 163 g/m^2
	■ Maximum paper tray capacity:	Up to 50 sheets of 80 g/m^2 plain paper Up to 3 envelopes
	Paper Tray 2 (option)	
	■ Paper Type:	Plain paper, Thin paper or Recycled paper
	■ Paper Size:	Letter, A4, B5, A5, B6, Executive, Legal and Folio.
	■ Paper Weight:	60 to 105 g/m^2
	■ Maximum paper tray capacity:	Up to 500 sheets of 80 g/m^2 plain paper
Paper Output	Up to 150 sheets (face down print delivery to the output paper tray)	
Duplex	Paper Size	Legal, Folio and A4
	Manual Duplex	Yes
	Automatic Duplex	Yes

Fax

Compatibility	ITU-T Group 3	
Duplex Fax (Receive)	Yes	
Coding System	MH/MR/MMR/JBIG/JPEG	
Modem Speed	Automatic Fallback:	33,600 bps
Single-Sided Document Size	ADF Width:	147.3 to 215.9 mm (5.8 to 8.5 in.)
	ADF Height:	147.3 to 356 mm (5.8 to 14 in.)
	Scanner Glass Width:	Max. 215.9 mm (8.5 in.)
	Scanner Glass Height:	Max. 355.6 mm (14 in.)
2-Sided (Duplex) Document Size	ADF Width:	147.3 to 210.0 mm (5.8 to 8.3 inches)
	ADF Height:	147.3 to 297.0 mm (5.8 to 11.7 inches)
Scanning Width	Max. 208 mm	
Printing Width	Max. 208 mm	
Grey Scale	256 levels	
Polling Types	Standard, Secure, Timer, Sequential	
Contrast Control	Automatic/Light/Dark (manual setting)	
Resolution	Horizontal:	8 dot/mm
	Vertical	
	■ Standard:	3.85 line/mm (Black)
		7.7 line/mm (Colour)
	■ Fine:	7.7 line/mm (Black)
		7.7 line/mm (Colour)
	■ Photo:	7.7 line/mm (Black)
	■ Superfine:	15.4 line/mm (Black)
One-Touch Dial	40 (20 × 2)	
Speed-Dial	300 stations	
Groups	Up to 20	
Broadcasting	390 stations (B&W only)	
Automatic Redial	3 times at 5 minute intervals	
Auto Answer	0, 1, 2, 3, 4, 5, 6, 7 or 8 rings	
Communication Source	Public switched telephone network	
Memory Transmission	Up to 500 [1]/400 [2] pages	
Out of Paper Reception	Up to 500 [1]/400 [2] pages	

[1] 'Pages' refers to the 'Brother Standard Chart No. 1' (a typical business letter, Standard resolution, JBIG code). Specifications and printed materials are subject to change without prior notice.

[2] 'Pages' refers to the 'ITU-T Test Chart #1' (a typical business letter, Standard resolution, JBIG code). Specifications and printed materials are subject to change without prior notice.

Copy

Colour/Monochrome	Yes/Yes	
Duplex Copying	Yes	
Single-Sided Document Size	ADF Width:	148 to 215.9 mm (5.8 to 8.5 in.)
	ADF Height:	148 to 355.6 mm (5.8 to 14 in.)
	Scanner Glass Width:	Max. 215.9 mm (8.5 in.)
	Scanner Glass Height:	Max. 355.6 mm (14 in.)
	Copy Width:	Max. 210 mm (8.26 in.)
2-Sided (Duplex) Document Size	ADF Width:	147.3 to 215.9 mm (5.8 to 8.5 inches)
	ADF Height:	147.3 to 297.0 mm (5.8 to 11.7 inches)
Multiple Copies	Stacks or Sorts up to 99 pages	
Reduce/Enlarge	25% to 400% (in increments of 1%)	
Resolution	Up to 1200 × 600 dpi [1]	
First Copy Out Time	Approx. 21 seconds (Black) [2 3]	
	Approx. 23 seconds (Colour) [2 3]	

1 When making a B&W copy from the scanner glass in text quality mode at the 25 to 150% ratio.

2 First copy out time may change if the machine is calibrating or registering itself.

3 First copy out time may vary due to scanner lamp warm up time.

Scan

Colour/Monochrome	Yes/Yes	
Duplex Scanning	Yes	
TWAIN Compliant	Yes (Windows® 2000 Professional/XP/ XP Professional x64 Edition/Windows Vista®)	
	Mac OS® X 10.2.4 or greater	
WIA Compliant	Yes (Windows® XP/Windows Vista®)	
Colour Depth	24 bit colour	
Resolution	Up to 19200 × 19200 dpi (interpolated) [1]	
	Up to 1200 × 2400 dpi (optical) [2]	
	Up to 1200 x 600 dpi (optical) [3]	
Single-Sided Document Size	ADF Width:	148.0 to 215.9 mm (5.8 to 8.5 in.)
	ADF Height:	148.0 to 355.6 mm (5.8 to 14 in.)
	Scanner Glass Width:	Max. 215.9 mm (8.5 in.)
	Scanner Glass Height:	Max. 355.6 mm (14 in.)
Scanning Width	Max. 210 mm (8.26 in.)	
2-sided (Duplex) Document Size	ADF Width:	148.0 to 215.9 mm (5.8 to 8.5 in.)
	ADF Height:	148.0 to 297.0 mm (5.8 to 11.7 in)
Greyscale	256 levels	

1 Maximum 1200 × 1200 dpi scanning with the WIA driver in Windows® XP/Windows Vista® (resolution up to 19200 × 19200 dpi can be chosen by using the Brother scanner utility)

2 When using the scanner glass

3 When using the ADF

Print

Emulations	PCL6
	BR-Script (PostScript®) Level 3
Printer Driver	Host-Based Driver for Windows® 2000 Professional/XP/ XP Professional x64 Edition/ Windows Vista®/ Windows Server® 2003 (print only via network)
	BR-Script (PPD file) for Windows® 2000 Professional/XP/ XP Professional x 64 Edition/Windows Vista®
	Macintosh® Printer Driver for Mac OS® X 10.2.4 or greater
	BR-Script (PPD file) for Mac OS® X 10.2.4 or greater
Resolution	600 × 600 dpi, 2400 dpi (2400 × 600 dpi)
Print Speed	Up to 20 pages/minute (A4 size) (Black) [1] [2]
	Up to 20 pages/minute (A4 size) (Colour) [1] [2]
Duplex Printing	Up to 7 sides/minute (3.5 pages) (Black)
	Up to 7 sides/minute (3.5 pages) (Colour)
Print Speed for Duplex Printing	Up to 7 sides/minute (3.5 pages) (Black)
	Up to 7 sides/minute (3.5 pages) (Colour)
First Print Out Time	Less than 16 seconds (Black) [3]
	Less than 17 seconds (Colour) [3]

1 The printing speed may change depending on the type of document you print.

2 From the standard paper tray and optional paper tray.

3 First print out time may change if the machine is calibrating or registering itself.

Interfaces

USB	Use a USB 2.0 interface cable that is no longer than 2.0 m (6 feet). [1] [2]
LAN cable	Use an Ethernet UTP cable category 5 or greater.
Wireless LAN	Your machine supports IEEE 802.11b/g wireless communication with your wireless LAN using Infrastructure mode or a wireless Peer-to-Peer connection in Ad-hoc mode.

[1] Your machine has a Hi-Speed USB 2.0 interface. The machine can also be connected to a computer that has a USB 1.1 interface.

[2] Third party USB ports are not supported.

PictBridge

Compatibility	Supports the Camera & Imaging Products Association PictBridge standard CIPA DC-001. Visit http://www.cipa.jp/pictbridge for more information.
Interface	USB direct interface

Direct print feature

Compatibility	PDF version 1.6 [1], JPEG, Exif + JPEG, PRN (created by MFC-9840CDW printer driver), TIFF (scanned by all Brother MFC or DCP models), PostScript®3™ (created by MFC-9840CDW BR Script3 printer driver)

[1] JBIG2 image files, JPEG2000 image files and layered files are not supported.

Computer requirements

Minimum System Requirements and Supported PC Software Functions								
Computer Platform & Operating System Version		**Supported PC Software Functions**	**PC Interface**	**Processor Minimum Speed**	**Minimum RAM**	**Recommended RAM**	**Available Hard Disk Space**	
							For Drivers	**For Applications**
Windows® Operating System	Windows® 2000 Professional [4]	Printing, PC Fax [3], Scanning	USB, Ethernet, Wireless 802.11 b/g	Intel® Pentium® or equivalent	64 MB	256 MB	150 MB	310 MB
	Windows® XP Home [4] Windows® XP Professional [4]				128 MB			
	Windows® XP Professional x64 Edition [1]			AMD Opteron™ AMD Athlon™ 64 Intel® Xeon® with Intel® EM64T Intel® Pentium® 4 with Intel® EM64T or equivalent	256 MB	512 MB		
	Windows Vista® [1]			Intel® Pentium® 4 or equivalent 64-bit supported CPU	512 MB	1 GB	500 MB	500 MB
	Windows Server® 2003	Printing	Ethernet, Wireless 802.11 b/g	Intel® Pentium® III or equivalent	256 MB	512 MB	50MB	Not Available
	Windows Server® 2003 x64 Edition			AMD Opteron™ AMD Athlon™ 64 Intel® Xeon® with Intel® EM64T Intel® Pentium® 4 with Intel® EM64T or equivalent				
Macintosh® Operating System	Mac OS® X 10.2.4 or greater	Printing, PC Fax send [3], Scanning	USB [2], Ethernet, Wireless 802.11 b/g	PowerPC G4/G5, Intel® Core™ Solo/Duo, PowerPC G3 350MHz	128 MB	160 MB	80 MB	400 MB

1 For WIA, 1200x1200 resolution. Brother Scanner Utility enables to enhance up to 19200 x 19200 dpi.

2 Third party USB ports are not supported.

3 PC Fax supports black and white only.

4 PaperPort™ 11SE supports Microsoft® SP4 or higher for Windows® 2000 and SP2 or higher for XP.

Consumable items

Toner Cartridge Life	Standard Toner Cartridges:	
	TN-130BK (Black):	Approx. 2,500 pages [1]
	TN-130C, **TN-130M**, **TN-130Y** (Cyan, Magenta, Yellow):	Approx.1,500 pages [1]
	High-Yield Toner Cartridges:	
	TN-135BK (Black):	Approx. 5,000 pages [1]
	TN-135C, **TN-135M**, **TN-135Y** (Cyan, Magenta, Yellow):	Approx. 4,000 pages [1]
Drum Unit Life Expectancy	**DR-130CL**:	Approx. 17,000 pages [2]
Belt Unit	**BU-100CL**:	Approx. 50,000 pages [2]
Waste Toner Box	**WT-100CL**:	Approx. 20,000 pages [3]

[1] When printing on Letter or A4 size paper at 5% print coverage

[2] When printing on Letter or A4 size paper

[3] When printing on Letter or A4 size paper at 5% print coverage for CMYK each

Ethernet wired network

Network board model name	NC-6500h	
LAN	You can connect your machine to a network for Network Printing, Network Scanning, PC Fax and Remote Setup. [1] [2]	
Support for	Windows® 2000 Professional, Windows® XP, Windows® XP Professional x64 Edition, Windows Vista®, Windows Server® 2003 and Windows Server® 2003 x64 Edition [2]	
	Mac OS® X 10.2.4 or greater [3]	
Protocols	IPv4:	
	TCP/IP	ARP, RARP, BOOTP, DHCP, APIPA (Auto IP), WINS, NetBIOS name resolution, DNS resolver, mDNS, LPR/LPD, Custom Raw Port/Port9100, IPP, IPPS, FTP server, SSL/TLS, POP before SMTP, SMTP-AUTH, Telnet, SNMPv1, HTTP/HTTPS server, TFTP client and server, SMTP client, APOP, LLTD responder, Raw Port (PC scanner), FTP client, LDAP, POP3
	IPv6:	
	TCP/IP	(Turned off as default) NDP, RA, DNS, mDNS, LPR/LPD, Custom Raw Port/Port9100, IPP, IPPS, FTP server, SSL/TLS, POP before SMTP, SMTP-AUTH, Telnet, SNMPv1, HTTP/HTTPS server, TFTP client and server, SMTP client, APOP, LLTD responder, Raw Port (PC scanner), LDAP, POP3
Network type	Ethernet 10/100 BASE-TX Auto Negotiation (Wired LAN)	
Management utilities [4]	BRAdmin Light for Windows® 2000 Professional, Windows® XP, Windows® XP Professional x64 Edition, Windows Vista®, Windows Server® 2003, Windows Server® 2003 x64 Edition and Mac OS® X 10.2.4 or greater	
	BRAdmin Professional for Windows® 2000 Professional, Windows® XP, Windows® XP Professional x64 Edition, Windows Vista®, Windows Server® 2003 and Windows Server® 2003 x64 Edition	
	Web BRAdmin for Windows® 2000 Professional, Windows® XP, Windows® XP Professional x64 Edition, Windows Vista®, Windows Server® 2003 and Windows Server® 2003 x64 Edition	
	Client computers with a web browser supporting Java™	

1 PC Fax Send for Mac®

2 Only printing for Windows Server® 2003

3 Mac OS® × 10.2.4 or greater (mDNS)

4 BRAdmin Professional and Web BRAdmin are available as a download from http://solutions.brother.com.

Ethernet wireless network

Network board model name	NC-7300w	
LAN	You can connect your machine to a network for Network Printing, Network Scanning, PC Fax and Remote Setup [1] [2].	
Support for	Windows® 2000 Professional, Windows® XP, Windows® XP Professional x64 Edition, Windows Vista®, Windows Server® 2003 and Windows Server® 2003 x64 Edition Mac OS® X 10.2.4 or greater [3]	
Protocols	TCP/IP for IPv4:	ARP, RARP, BOOTP, DHCP, APIPA (Auto IP), WINS, NetBIOS name resolution, DNS resolver, mDNS, LPR/LPD, Custom Raw Port/Port9100, IPP, IPPS, FTP server, SSL/TLS, POP before SMTP, SMTP-AUTH, Telnet, SNMPv1, HTTP/HTTPS server, TFTP client and server, SMTP client, APOP, LLTD responder, Raw Port (PC scanner), FTP client, LDAP, POP3
	TCP/IP for IPv6	(Turned off as default) NDP, RA, DNS, mDNS, LPR/LPD, Custom Raw Port/Port9100, IPP, IPPS, FTP server, SSL/TLS, POP before SMTP, SMTP-AUTH, Telnet, SNMPv1, HTTP/HTTPS server, TFTP client and server, SMTP client, APOP, LLTD responder, Raw Port (PC scanner), LDAP, POP3
Network type	IEEE 802.11 b/g (Wireless LAN)	
Management utilities [4]	BRAdmin Light for Windows® 2000 Professional, Windows® XP, Windows® XP Professional x64 Edition, Windows Vista®, Windows Server® 2003, Windows Server® 2003 x64 Edition and Mac OS® X 10.2.4 or greater BRAdmin Professional for Windows® 2000 Professional, Windows® XP, Windows® XP Professional x64 Edition, Windows Vista®, Windows Server® 2003 and Windows Server® 2003 x64 Edition Web BRAdmin for Windows® 2000 Professional, Windows® XP, Windows® XP Professional x64 Edition, Windows Vista®, Windows Server® 2003 and Windows Server® 2003 x64 Edition Client computers with a web browser supporting Java™.	

1 PC Fax Send for Mac®

2 Only printing for Windows Server® 2003

3 Mac OS® × 10.2.4 or greater (mDNS)

4 BRAdmin Professional and Web BRAdmin are available as a download from http://solutions.brother.com.

Authentication and encryption for wireless users only

Authentication method

The Brother machine supports the following methods:

- Open system

  Wireless devices are allowed to access the network without any authentication.

- Shared key

  A secret pre-determined key is shared by all devices that will access the wireless network. The Brother machine uses the WEP keys as the pre-determined key.

- WPA-PSK/WPA2-PSK

  Enables a Wi-Fi® Protected Access Pre-Shared Key (WPA-PSK/WPA2-PSK), which enables the Brother wireless machine to associate with access points using TKIP for WPA-PSK and WPA2-PSK (WPA-Personal).

- LEAP

  Cisco LEAP (Light Extensible Authentication Protocol) has been developed by Cisco Systems, Inc. and enables the Brother wireless product to associate with access points using CKIP and CMIC encryptions.

Encryption methods

Encryption is used to secure the data that is sent over the wireless network. The Brother machine supports the following encryption methods:

- WEP

  By using WEP (Wired Equivalent Privacy), the data is transmitted and received with a secure key.

- TKIP

  TKIP (Temporal Key Integrity Protocol) provides per-packet key mixing a message integrity check and re-keying mechanism.

- AES

  AES (Advanced Encryption Standard) is a Wi-Fi® authorized strong encryption standard.

- CKIP

  The original Key Integrity Protocol for LEAP by Cisco Systems, Inc.

- CMIC

  CMIC (Cisco Message Integrity Check) is the message integrity check mechanism for LEAP by Cisco Systems, Inc.

Network key

There are some rules for each security method:

- Open system/Shared key with WEP

  This key is a 64-bit or 128-bit value that must be entered in an ASCII or hexadecimal format.

  - 64 (40) bit ASCII:

    Uses 5 text characters. e.g.“WSLAN” (this is case sensitive).

  - 64 (40) bit hexadecimal:

    Uses 10 digits of hexadecimal data. e.g.“71f2234aba”

  - 128 (104) bit ASCII:

    Uses 13 text characters. e.g.“Wirelesscomms” (this is case sensitive).

  - 128 (104) bit hexadecimal:

    Uses 26 digits of hexadecimal data. e.g.“71f2234ab56cd709e5412aa2ba”

- WPA-PSK/WPA2-PSK and TKIP/AES

  Uses a Pre-Shared Key (PSK) that is 8 or more characters in length, up to a maximum of 63 characters.

- LEAP

  Users User ID and Password.

  - User ID: less than 64 characters in length.
  - Password: less than 32 characters in length.

Wi-Fi Alliance certification

This wireless Ethernet multi-function print server is a Wi-Fi certified IEEE 802.11b/802.11g product by the Wi-Fi Alliance. The Wi-Fi Alliance certification ensures the interoperability of other wireless LAN products based on the IEEE 802.11 specification. For more information on the Wi-Fi Alliance and other Wi-Fi certified products, visit http://www.wi-fi.org.

F Glossary

This is a comprehensive list of features and terms that appear in Brother manuals. Availability of these features depends on the model you purchased.

ADF (automatic document feeder)
The document can be placed in the ADF and scanned one page at a time automatically.

Auto Reduction
Reduces the size of incoming faxes.

Automatic fax transmission
Sending a fax without picking up the handset of the external telephone.

Automatic Redial
A feature that enables your machine to redial the last fax number after five minutes if the fax did not go through because the line was busy.

Backup Print
Your machine prints a copy of every fax that is received and stored in memory.This is a safety feature so you will not lose messages during a power failure.

Batch Transmission
As a cost saving feature, all delayed faxes to the same fax number will be sent as one transmission.

Beeper Volume
Volume setting for the beep when you press a key or make an error.

Broadcasting
The ability to send the same fax message to more than one location.

BT Call Sign
A subscriber service purchased from the telephone company in U.K. that gives you another telephone number on an existing telephone line. The Brother machine uses the new number to simulate a dedicated fax line.

Cancel Job
Cancels a programmed print job and clears the machine's memory.

CNG tones
The special tones (beeps) sent by fax machines during automatic transmission to tell the receiving machine that a fax machine is calling.

Coding method
Method of coding the information contained in the document. All fax machines must use a minimum standard of Modified Huffman (MH). Your machine is capable of greater compression methods, Modified Read (MR), Modified Modified Read (MMR), JBIG and JPEG, if the receiving machine has the same capability.

Communication error (or Comm. Error)
An error during fax sending or receiving, usually caused by line noise or static.

Compatibility group
The ability of one fax unit to communicate with another. Compatibility is assured between ITU-T Groups.

Contrast
Setting to compensate for dark or light documents, by making faxes or copies of dark documents lighter and light documents darker.

Delayed Fax
Sends your fax at a specified later time that day.

Dual Access
Your machine can scan outgoing faxes or scheduled jobs into memory at the same time it is sending a fax or receiving or printing an incoming fax.

ECM (Error Correction Mode)

Detects errors during fax transmission and resends the pages of the fax that had an error.

Extension telephone

A telephone on the fax number that is plugged into a separate wall socket.

External telephone

A TAD (telephone answering device) or telephone that is connected to your machine.

F/T Ring Time

The length of time that the Brother machine pseudo/double-rings (when the Receive Mode setting is Fax/Tel) to notify you to pick up a voice call that it answered.

Fax Detect

Enables your machine to respond to CNG tones if you interrupt a fax call by answering it.

Fax Forwarding

Sends a fax received into the memory to another pre-programmed fax number.

Fax Journal

Lists information about the last 200 incoming and outgoing faxes. TX means Transmit. RX means Receive.

Fax Receive Code

Press this code (✳ 5 1) when you answer a fax call on an extension or external telephone.

Fax Storage

You can store faxes in the memory.

Fax tones

The signals sent by sending and receiving fax machines while communicating information.

Fax/Tel

You can receive faxes and telephone calls. Do not use this mode if you are using a telephone answering device (TAD).

Fine resolution

Fine resolution is 203 × 196 dpi. It is used for small print and graphs.

Greyscale

The shades of grey available for copying and faxing photographs.

Group number

A combination of One-Touch and Speed-Dial numbers that are stored on a One-Touch key or in a Speed-Dial location for Broadcasting.

Help list

A printout of the complete Menu table that you can use to program your machine when you do not have the User's Guide with you.

Journal Period

The pre-programmed time period between automatically printed Fax Journal Reports. You can print the Fax Journal on demand without interrupting the cycle.

LCD (liquid crystal display)

The display screen on the machine that shows interactive messages during On-Screen Programming and shows the date and time when the machine is idle.

Manual fax

When you lift the handset of your external telephone and then press **Tel/R** so you can hear the receiving fax machine answer before you press **Mono Start** or **Colour Start** to begin transmission.

Menu mode

Programming mode for changing your machine's settings.

OCR (optical character recognition)

The bundled ScanSoft™ PaperPort™ 11SE with OCR or Presto!® PageManager® software application converts an image of text to text you can edit.

One-Touch

Keys on the machine's control panel where you can store numbers for easy dialling. You can store a second number on each key if you press **Shift** and the One-Touch key together.

Out of Paper Reception

Receives faxes into the machine's memory when the machine is out of paper.

Overseas Mode

Makes temporary changes to the fax tones to accommodate noise and static on overseas telephone lines.

Pause

Allows you to place a 2.8 second delay in the dialling sequence stored on One-Touch keys and Speed-Dial numbers. Press **Redial/Pause** as many times as needed for longer pauses.

PictBridge

Allows you to print photos directly from your PictBridge compatible digital camera at high resolution for photo quality printing.

Polling

The process of a fax machine calling another fax machine to retrieve waiting fax messages.

Pulse

A form of rotary dialling on a telephone line.

Quick Dial List

A listing of names and numbers stored in One-Touch and Speed-Dial memory, in numerical order.

Real Time Transmission

When memory is full, you can send faxes in real time.

Remaining jobs

You can check which programmed fax jobs are waiting in the memory and cancel the jobs individually.

Remote Access Code

Your own four-digit code (– – –✱) that allows you to call and access your machine from a remote location.

Remote Retrieval Access

The ability to access your machine remotely from a touch tone telephone.

Resolution

The number of vertical and horizontal lines per inch.

Ring Delay

The number of rings before the machine answers in `Fax Only` and `Fax/Tel` modes.

Ring Volume

Volume setting for the machine's ring.

Scanning

The process of sending an electronic image of a paper document into your computer.

Search

An electronic, alphabetical listing of stored One-Touch, Speed-Dial and Group numbers.

Speed-Dial

A pre-programmed number for easy dialling. You must hold down **Shift** as you press **Search/Speed Dial**, then enter the three-digit Speed-Dial location and press **Mono Start** or **Colour Start** to begin the dialling process.

Station ID

The stored information that appears on the top of faxed pages. It includes the sender's name and fax number.

TAD (telephone answering device)

You can connect an external TAD to your machine.

Temporary settings

You can select certain options for each fax transmission and copy without changing the default settings.

Tone

A form of dialling on the telephone line used for Touch Tone telephones.

Transmission

The process of sending faxes over the telephone lines from your machine to the receiving fax machine.

User Settings List

A printed report that shows the current settings of the machine.

Xmit Report
(Transmission Verification Report)

A listing for each transmission, that shows its date, time and number.

G Index

A

ADF (automatic document feeder) 34
  using 20
Answering machine (TAD)
  connecting 52
Apple® Macintosh®
  See Software User's Guide on the CD-ROM.
Automatic
  fax receive 45
    easy receive 47
    Fax Detect 47
  fax redial 58
  fax send 34
Automatic daylight saving time 26

B

Belt unit 181
Broadcasting 36
  cancelling 37
  setting up groups for 62

C

Cancelling
  broadcast in progress 37
  fax jobs in memory 43
  jobs awaiting redial 43
  print jobs 8
  remote fax options 67
Cleaning
  corona wire 155
  drum unit 159
  laser scanner window 151
  scanner 150
Combining quick dial numbers 63
Connecting
  external TAD (answering machine) 52
Consumable items 167
Control pane overview 6
ControlCenter2 (for Macintosh®)
  See Software User's Guide on the CD-ROM.
ControlCenter3 (for Windows®)
  See Software User's Guide on the CD-ROM.
Copy
  brightness 83
  colour saturation 84
  contrast 78
  duplex 7, 81, 82
  Enlarge/Reduce key 79
  enter copy mode 78
  keys 7, 79
  multiple 78
  N in 1 (page layout) 7, 80
  out of memory 85
  quality 79
  single 78
  sort (ADF only) 7, 83
  temporary settings 79
  tray selection 7, 85
  using ADF 20, 78, 81, 83
  using scanner glass 21, 80, 81
Cordless telephone (non-Brother) 55
Cover page 38
  custom comments 38
  for all faxes 39
  for next fax only 38
  printed form 39

D

Delayed batch transmission 42
Dial tone detection 130
Dialling
  a pause 59
  automatic fax redial 58
  groups (broadcasting) 36
  manual 57
  one-touch 57
  speed-dial 57
  using the search key 58
Direct print 92
  Direct key 8, 93
  specification 229
Document
  how to load
    ADF 20
    scanner glass 21
  jam 138

Drum unit
checking (remaining life) 200
cleaning 155, 159
replacing 174
Dual access 41
Duplex (2-sided)
copying 81, 82
printing 206
from USB flash memory drive 93
troubleshooting 115, 135, 148
Duplex key (2-sided) 7

E

Enlarge/Reduce key 79
Envelopes 11, 12, 14, 17, 19
Equalization 130
Error messages on LCD
Change Parts
Belt Unit 181
Drum 174
Waste Toner Box 186
Comm. Error 132
Init Unable XX 133
No Paper 134
Not Registered 57
Out of Memory 134
Print Unable XX 134
Scan Unable XX 135
Toner Life End 169
Toner Low 169
Waste Toner Full 186
Extension telephone, using 53, 54, 55
External telephone, connecting 53, 54

F

Fax codes
changing 56, 67
fax receive code 53, 55
remote access code 67
telephone answer code 53, 55
Fax forwarding
changing remotely 69, 70
programming a number 64
Fax storage 65
printing from memory 49
turning off 67
turning on 65
Fax, stand-alone
receiving 44
at end of conversation 45
easy receive 47
fax forwarding 64, 70
fax receive stamp 48
from extension telephone 53, 55
polling receive 71
reducing to fit on paper 48
retrieving from a remote site 68, 70
ring delay, setting 46
sequential polling 72
telephone line interference 130
sending 22, 34
broadcasting 36
cancelling from memory 43
contrast 39
delayed batch 42
delayed fax 42
enter Fax mode 41
from ADF 34
from memory (dual access) 41
from scanner glass 35
manual 43
overseas 42
polled transmit 73
real time transmission 41
resolution 40
telephone line interference 130
Fax/Tel mode
answering at extension telephones 53, 55
easy receive 47
F/T ring time (double-ring) 46
fax receive code 53, 55
receiving faxes 54
ring delay 46
telephone answer code 53, 55
Folio 12, 23
Function Lock 29

G

Greyscale 225, 227
Groups for broadcasting 62

H

HELP 76
  Help List 76
  LCD messages 201
  Menu Table 201, 203
  using menu keys 201

J

Jams
  document 138
  paper 139
Job Cancel key 8, 115

L

Labels 11, 12, 16, 19
LCD (liquid crystal display) 6, 201
  contrast 27
  Help List 76
LDAP
  See Network User's Guide on the CD-ROM.

M

Machine information
  checking remaining life of parts 200
  page counters 200
  status LED 9
Macintosh®
  See Software User's Guide on the CD-ROM.
Maintenance, routine 149
  checking the remaining life of parts 200
  replacing
    belt unit 181
    drum unit 174
    toner cartridge 169
Manual
  dialing 57
  receive 44
  transmission 43
Memory
  adding DIMM (option) 110
    installing 110
  storage 201
Menu Table 201, 203
  using menu keys 201
Mode timer 22
Mode, entering
  copy 78
  fax 34, 41
  scan 7
Multi-line connections (PBX) 53

N

N in 1 (page layout) 7, 80
Network
  faxing
    See Software User's Guide on the CD-ROM.
  printing
    See Network User's Guide on the CD-ROM.
  scanning
    See Software User's Guide on the CD-ROM.

O

One-touch
  changing 61
  setting up 59
  using 57
Out of Memory
message 43, 85, 91, 94, 134

P

Packing and shipping the machine 192
Page layout (N in 1) 80
Paper 11, 224
  how to load 17
  jam 139
  size 11
  size of document 20, 226, 227
  type 11, 22
Paper size 23
PaperPort™ 11SE with OCR
  See Software User's Guide on the CD-ROM and Help in the PaperPort™ 11SE application to access How-to-Guides.

PC Fax
See Software User's Guide on the CD-ROM.
PC fax receive 65
PictBridge
DPOF printing 90
specification 229
Polling
polled transmit 73
polling receive 71
sequential polling 72
Power failure 201
Print
difficulties 112
drivers 228
fax from memory 49
Job Cancel key 8
keys 8
paper jams 139
quality 119
reports 76
resolution 228
Secure key 8
specifications 228
Printing
See Software User's Guide on the CD-ROM.
Programming your machine 201

Q

Quality (copying) 79
Quick-dial 59
broadcasting
using groups 36
group dial
changing 61
setting up groups for broadcasting 62
one-touch dial
changing 61
custom scan profile 59
setting up 59
using 57
search 58
speed-dial
changing 61
custom scan profile 59, 60
setting up 60
using 57

R

Redial/Pause key 59
Reducing
copies 79
incoming faxes 48
Remote retrieval 67
access code 67, 68
commands 70
getting your faxes 68
Remote setup
See Software User's Guide on the CD-ROM.
Replacing
belt unit 181
drum unit 174, 175
toner cartridge 169
waste toner box 186
Reports 75
Fax Journal 76
journal period 75
Help List 76
how to print 76
Network Configuration 76
Quick-Dial List 76
Transmission Verification 75
User Settings 76
Resolution
copy 226
fax (standard, fine, superfine, photo) 40, 225
print 228
scan 227
setting for next fax 40
Resolution key 7, 40
Restricted users 31
Ring delay, setting 46

G

S

Safety instructions 103
Scanner glass, using 21
Scanning
  See Software User's Guide on the CD-ROM.
Search/Speed Dial key 57, 58, 62
Secure key 8
Security
  Secure function lock 29
    administrator password 30
    Public user 30
    restricted users 31
  Setting lock 28
Serial number
  how to find.....See inside front cover
Shipping the machine 192
Sleep time 26
Sockets
  EXT
    external telephone 54
    TAD (answering machine) 52
Sort 83
Speed-dial
  changing 61
  setting up 60
  using 57
Status LED 6, 9

T

TAD (telephone answering device), external 44
  connecting 52
  recording OGM 53
TAD external
  connecting 52
Tel/R key 7, 54, 55
Telephone line
  connections 52
  difficulties 112
  multi-line (PBX) 53
Telephone line type 50
Temporary copy settings 79
Text, entering 220
Tone or pulse 63
Toner cartridge, replacing 169
Toner save 26
Tray selection 85
  Tray select key 7
Tray use, setting
  copy 23
  fax 24
  print 24
Troubleshooting 112
  document jam 138
  if you are having difficulty
    copy quality 114
    incoming calls 113
    network 116
    paper handling 115
    print quality 116, 119
    printing 112, 114
    scanning 115
    software 115
    telephone line 130
  paper jam 139

U

USB flash memory drive 92

V

Volume, setting
  beeper 25
  ring 25
  speaker 25

W

Waste toner box 186
Windows®
  See Software User's Guide on the CD-ROM.
Wireless Network
  See Software User's Guide and Network User's Guide on the CD-ROM.

This machine is approved for use in the country of purchase only, local Brother companies or their dealers will only support machines purchsed in their own countries.