Brother Laser Printer

USER'S GUIDE

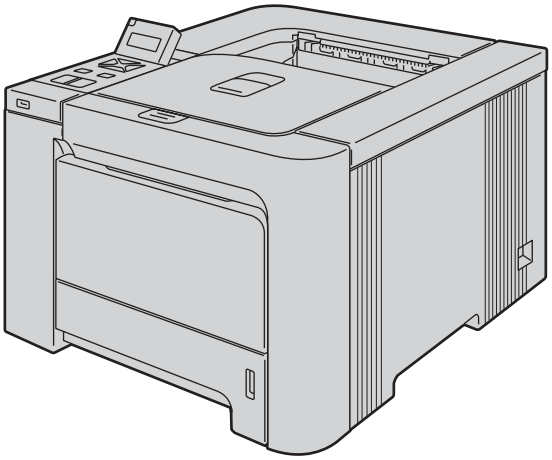

HL-4040CN
HL-4050CDN

For visually-impaired users

You can read this manual with Screen Reader 'text-to-speech' software.

You must set up the hardware and install the driver before you can use the printer.

Please use the Quick Setup Guide to set up the printer. You can find a printed copy in the box.

Please read this User's Guide thoroughly before you use the printer. Keep the CD-ROM in a convenient place so you can use it quickly if you need to.

Please visit us at http://solutions.brother.com where you can get product support, the latest driver updates and utilities, and answers to frequently asked questions (FAQs) and technical questions.

Version 0

CHN

Using this guide

Symbols used in this guide

We use the following icons throughout this User's Guide:

	Warnings tell you what to do to prevent possible personal injury.
	Electrical Hazard icons alert you to a possible electrical shock.
	Hot Surface icons warn you not to touch machine parts that are hot.
	Cautions specify procedures you must follow or avoid to prevent possible damage to the printer or other objects.
	Improper Setup icons alert you to devices and operations that are not compatible with the printer.
	Notes tell you how you should respond to a situation that may arise or give tips about how the operation works with other features.

Safety precautions

To use the printer safely

WARNING

There are high voltage electrodes inside the printer. Before you clean the inside of the printer or replace parts, make sure that you have turned off the power switch and unplugged the printer from the AC power outlet.

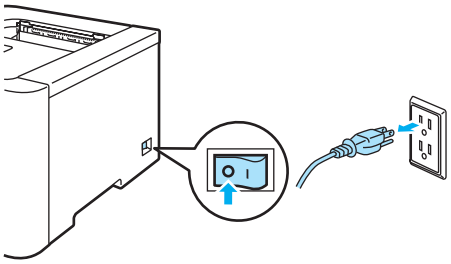

DO NOT handle the plug with wet hands. Doing this might cause an electrical shock.

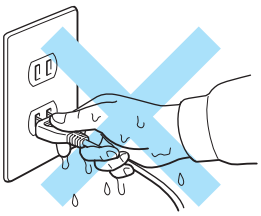

The fuser unit becomes extremely hot during operation. Wait until it has cooled down sufficiently before replacing consumable items. DO NOT remove or damage the caution label located on or around the fuser.

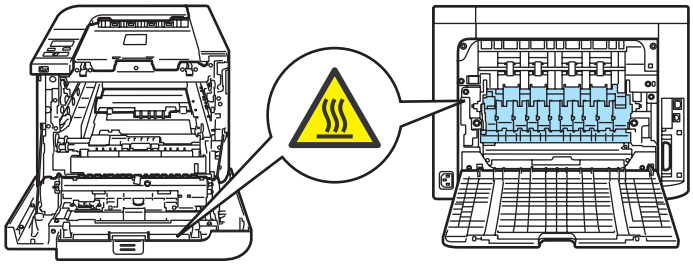

DO NOT use a vacuum cleaner to clean up scattered toner. Doing this might cause the toner dust to ignite inside the vacuum cleaner, potentially starting a fire. Carefully clean the toner dust with a dry, lint-free cloth and dispose of it according to local regulations.

DO NOT use flammable substances or any type of spray to clean the inside or outside of the machine. Doing this may cause a fire or electrical shock.

If the printer becomes hot, blows smoke, or generates an obscure odor, immediately turn off the power switch and unplug the printer from the AC power outlet. Call your Brother dealer or Brother Customer Service.

If metal objects, water or other liquids get inside the printer, immediately turn off the power switch and unplug the printer from the AC power outlet. Call your Brother dealer or Brother Customer Service.

This printer is heavy and weighs approximately 64.2 lb (29.1 kg). To prevent injuries when moving or lifting this printer, make sure to use at least two people. Be careful not to pinch your fingers when you set the printer back down.

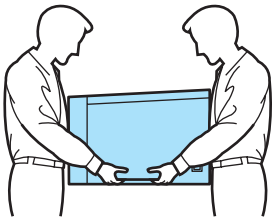

CAUTION

Lightning and power surges can damage this product! We recommend that you use a quality surge protection device on the AC power line, or unplug the printer during a lightning storm.

Trademarks

The Brother logo is a registered trademark of Brother Industries, Ltd.

Apple, the Apple Logo, Macintosh and TrueType are registered trademarks of Apple Inc. in the United States and other countries.

Hewlett Packard is a registered trademark and HP LaserJet 6P, 6L, 5P, 5L, 4, 4L 4P, III, IIIP, II, and IIP are trademarks of Hewlett-Packard Company.

Microsoft, MS-DOS, Windows are registered trademarks of Microsoft Corporation in the U.S. and other countries.

Windows Vista is either a registered trademark or trademark of Microsoft Corporation in the United States and/or other countries.

PostScript and PostScript 3 are trademarks of Adobe Systems Incorporated.

ENERGY STAR is a U.S. registered mark.

Citrix and MetaFrame are registered trademarks of Citrix Systems, Inc. in the United States.

SuSE is a registered trade mark of SuSE Linux AG.

RED HAT is a registered trade mark of Red Hat. Inc.

Mandrake is a registered trade mark of Mandrake Soft SA.

Intel, Intel Xeon and Pentium are trademarks or registered trademarks of Intel Corporation.

AMD, AMD Athlon, AMD Opteron and combinations thereof, are trademarks of Advanced Micro Devices, Inc.

PictBridge is a trademark.

Java and all Java-based trademarks and logos are trademarks or registered trademarks of Sun Microsystems, Inc. in the United States and other countries.

Each company whose software title is mentioned in this manual has a Software License Agreement specific to its proprietary programs.

All other terms and brand and product names mentioned in this User's Guide are registered trademarks of their respective companies.

Compilation and Publication Notice

Under the supervision of Brother Industries Ltd., this manual has been compiled and published, covering the latest product's descriptions and specifications. The contents of this manual and the specifications of this product are subject to change without notice. Brother reserves the right to make changes without notice in the specifications and materials contained herein and shall not be responsible for any damages (including consequential) caused by reliance on the materials presented, including but not limited to typographical and other errors relating to the publication. © 2007 Brother Industries Ltd.

Shipment of the Printer

If for any reason you must ship your printer, carefully package the printer to avoid any damage during transit. We recommend that you save and use the original packaging. The printer should also be adequately insured with the carrier.

Table of Contents

1 About this Printer 1

Carton components 1
Interface cable 2
Front view 3
Back view 4
Positioning the printer 5
Power supply 5
Environment 5

2 Printing Methods 6

About paper 6
Type and size of paper 6
Recommended paper 7
Unprintable area 9
Printing methods 10
Printing on plain paper 10
Printing on thick paper, labels and envelopes 17
Duplex printing 21
Guidelines for printing on both sides of the paper 21
Manual duplex printing 21
Automatic duplex printing (HL-4050CDN only) 24
Booklet printing (for Windows® printer driver) 25
Printing photos from a digital camera 26
PictBridge requirements 26
Setting your digital camera 26
Printing images 27
Connecting a camera as a storage device 28
DPOF printing 28
Printing data from a USB flash memory drive with direct print 29
Supported file formats 29
Creating a PRN or PostScript® 3™ (HL-4050CDN only) file for direct printing 29
Printing data directly from the USB flash memory drive 30

3 Driver and Software 33

Printer driver 33
Features in the printer driver (for Windows®) 36
Using the custom monochrome printer driver (for Windows®) 46
Using the BR-Script3 printer driver (PostScript® 3™ language emulation for Windows®) (HL-4050CDN only) 47
Features in the printer driver (for Macintosh®) 54
Using the BR-Script3 printer driver (Post Script® 3™ language emulation for Macintosh®) (HL-4050CDN only) 61
Installing the BR-Script3 printer driver 61
Uninstalling the printer driver 64
Printer driver for Windows® and Windows Vista™ and Windows Server® 2003 64
Printer driver for Macintosh® 65
Software 66

Software for networks 66
About emulation modes 67
Automatic emulation selection (HL-4050CDN only) 67
Automatic interface selection 67

4 Control Panel 68

Control panel 68
Buttons 69
Go 69
Cancel 69
Reprint 70
+ or - button 70
Back 70
OK 70
LEDs 71
LCD 71
Back light 71
LCD messages 72
Reprinting documents 73
Using the control panel LCD menu 76
Menu table 77
Default settings 86
Calibration 87
Auto Registration 88
Manual Registration 89

5 Options 90

Lower tray (LT-100CL) (HL-4050CDN only) 90
SO-DIMM 91
SO-DIMM types 91
Installing extra memory 92

6 Routine Maintenance 94

Replacing the consumable items 94
Toner cartridges 96
Drum unit 103
Belt unit 109
Waste toner box 114
Cleaning 120
Cleaning the outside of the printer 120
Cleaning the inside of the scanner windows 121
Cleaning the corona wires 125
Cleaning the drum unit 130
Shipping the printer 132
Repacking Instructions 132

7 Troubleshooting 140

Identifying your problem 140
LCD messages 141

Paper handling 144
Paper jams and how to clear them 145
Jam MP Tray (paper jam in the MP tray).....146
Jam Tray 1 / Tray 2 (paper jam inside the paper tray) 146
Jam Duplex (paper jam underneath the standard paper tray (tray 1) or in the fuser unit) (HL-4050CDN only).....148
Jam Rear (paper jam behind the back cover) 151
Jam Inside (paper jam inside the printer) 154
Improving the print quality.....158
Solving print problems 166
Network problems.....166
Other problems.....166
For Macintosh® with USB.....167
Printing from DOS 167
BR-Script 3 (HL-4050CDN only).....167

A Appendix 168

Printer specifications.....168
Engine 168
Controller 169
Software 170
Direct Print feature.....170
Control panel 170
Paper handling 171
Media specifications 171
Supplies.....172
Dimensions / weights.....172
Other.....172
Computer requirements.....173
Important information for choosing your paper.....174
Symbol and character sets 177
How to use the Web Based Management (web browser) 177
Symbol and character sets list.....177
Quick reference for bar code control commands.....179
Print bar codes or expanded characters.....179

B Appendix 186

Frequently asked questions (FAQs) 186
Customer Service 186
Important information: regulations 187
Radio interference (220 to 240 volt model only).....187
IEC 60825-1 specification (220 to 240 volt model only) 187
Internal laser radiation 187
IMPORTANT - for your safety 188

D Index 189

1 About this Printer

Carton components

WARNING

This printer is heavy and weights roughly 29.1kg (64.2 lb). To prevent injuries when moving or lifting this printer, make sure to use at least two people.

When you unpack the printer, make sure that you have all of the following parts.

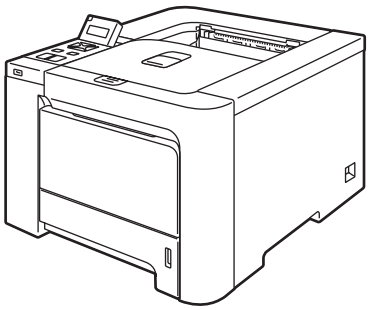

Printer

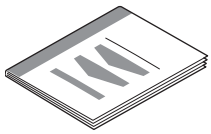

Quick Setup Guide

CD-ROM

AC power cord

USB Cable

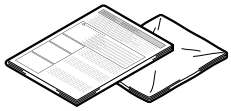

Insertion sheet and Plastic bag for repacking

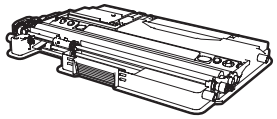

Waste toner box

(pre-installed)

Order No. WT-100CL

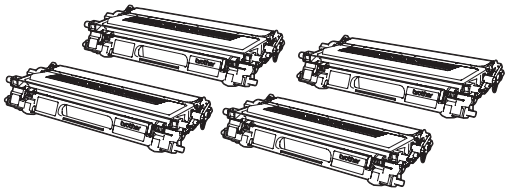

Toner cartridges

(Black, Cyan, Magenta and Yellow)

Order No. TN-170C,TN-170M,TN-170Y,TN-170BK
TN-175C,TN-175M,TN-175Y,TN-175BK

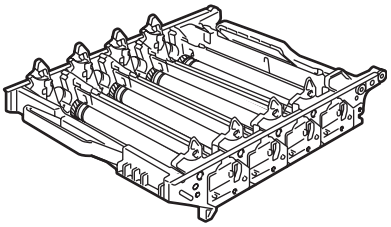

Drum unit

(pre-installed)

Order No. DR-170CL

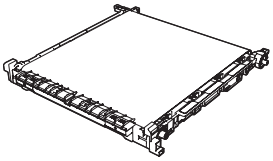

Belt unit

(pre-installed)

Order No. BU-100CL

Interface cable

The Parallel interface cable and Network interface cable are not standard accessories. Please purchase them, if you intend to use.

- USB cable

  Do not use a USB interface cable that is longer than 6 feet (2.0 meters).

  Do not connect the USB cable to a non-powered hub or a Macintosh® keyboard.

  Make sure that you connect it to the USB connector of your computer.

  Third party USB ports are not supported for Macintosh®.

- Parallel cable (HL-4050CDN only)

  Do not use a parallel interface cable that is longer than 6 feet (2.0 meters).

  Use a shielded interface cable that is IEEE 1284-compliant.

- Network cable

  Use a straight-through Category5 (or greater) twisted-pair cable for 10BASE-T or 100BASE-TX Fast Ethernet Network.

Front view

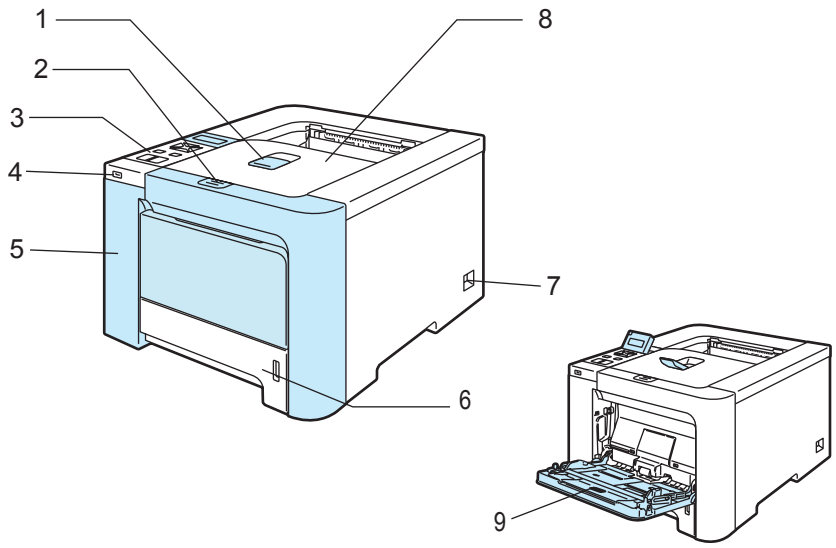

1 **Face-down output tray support flap (support flap)**

2 **Front cover release button**

3 **Control panel** [1]

4 **USB direct interface**

5 **Front cover**

6 **Paper tray**

7 **Power switch**

8 **Face-down output tray**

9 **Multi-purpose tray (MP tray)**

[1] You can adjust the angle of the LCD display by tilting it up or down.

Back view

The printer illustration is based on HL-4050CDN.

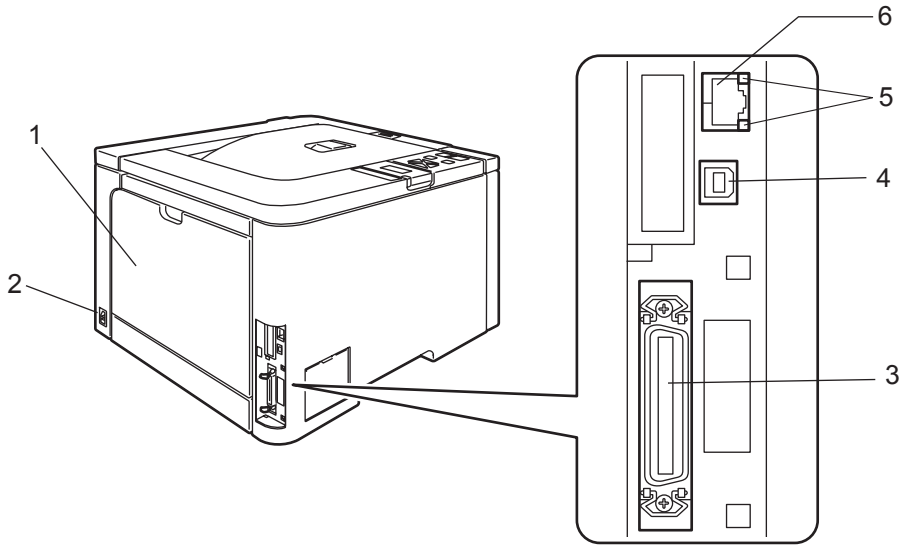

1 Back cover

2 AC power connector

3 Parallel interface connector (HL-4050CDN only)

4 USB interface connector

5 Network Activity LEDs (Light Emitting Diodes)

6 10BASE-T / 100BASE-TX port

Positioning the printer

Read the following before you use the printer.

Power supply

Use the printer within the recommended power range.

Power source: AC 220 to 240 V, 50/60 Hz

The power cord, including extensions, should be no longer than 5 meters (16.5 feet).

Do not share the same power circuit with other high-powered appliances, such as an air conditioner, copier, shredder and so on. If you cannot avoid using the printer with these appliances, we recommend that you use a voltage transformer or a high-frequency noise filter.

Use a voltage regulator if the power source is not stable.

Environment

- Put your printer on a flat, stable surface such as a desk that is free of vibration and shocks.
- Put the printer near an AC power outlet, so that it can be easily unplugged from the AC power outlet if there is an emergency.
- Only use the printer within the following ranges of temperature and humidity:

  Temperature: 10 °C to 32.5 °C (50 °F to 90.5 °F)

  Humidity: 20% to 80% (without condensation)
- Use the printer in a well-ventilated room.
- DO NOT put the printer where the ventilation hole of the printer is blocked. Keep a gap of roughly 100 mm (4 in.) between the ventilation hole and the wall.
- DO NOT expose the printer to direct sunlight, excessive heat, moisture, or dust.
- DO NOT put the printer near devices that contain magnets or produce magnetic fields.
- DO NOT expose the printer to open/naked flames or salty or corrosive gasses.
- DO NOT put objects on top of the printer.
- DO NOT put the printer near heaters, air conditioners, water, chemicals or refrigerators.
- Keep the printer horizontal when you carry it. To prevent injuries when moving or lifting this printer, make sure to use at least two people.

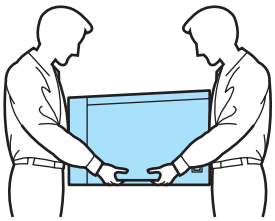

2 Printing Methods

About paper

Type and size of paper

The printer loads paper from the installed paper tray or the multi-purpose tray.

The names for the paper trays in the printer driver and this guide are as follows:

Paper tray	Tray 1
Multi-purpose tray	MP Tray
Optional lower tray unit (HL-4050CDN only)	Tray 2
Duplex unit for automatic duplex printing (HL-4050CDN only)	DX

When looking at this page on the CD-ROM, you can jump to the page for each printing method by clicking ⓘ in the table.

Media type	Tray 1	Tray 2 (HL-4050CDN only)	MP Tray	DX (HL-4050CDN only)	Choose the media type from the printer driver
Plain paper 75 g/m^2 to 105 g/m^2 (20 to 28 lb)	ⓘ	ⓘ	ⓘ	ⓘ	**Plain Paper**
Recycled paper	ⓘ	ⓘ	ⓘ	ⓘ	**Recycled Paper**
Bond paper Rough paper– 60 g/m^2 to 163 g/m^2 (16 to 43 lb)			ⓘ 60 g/m^2 to 161 g/m^2 (16 to 43 lb)		**Bond Paper**
Thin paper 60 g/m^2 to 75 g/m^2(16 to 20 lb)	ⓘ	ⓘ	ⓘ	ⓘ	**Thin Paper**
Thick paper 105 g/m^2 to 163 g/m^2(28 to 43 lb)			ⓘ		**Thick Paper** or **Thicker Paper**
Labels			ⓘ A4 or Letter		**Label**
Envelopes			ⓘ		**Envelopes** **Env. Thin** **Env. Thick**

	Tray 1	Tray 2 (HL-4050CDN only)	MP Tray	DX (HL-4050CDN only)
Paper size	A4, Letter, Legal, B5 (ISO), Executive, A5, A6, B6 (ISO), Folio, Post Card	A4, Letter, Legal, B5 (ISO), Executive, A5, B6 (ISO), Folio	Width: 69.9 to 215.9 mm (2.75 to 8.5 in.) Length: 116 to 406.4 mm (4.57 to 16 in.)	A4, A4 Long
Number of sheets (80 g/m^2 / 20 lb)	250 sheets	500 sheets	50 sheets	

Recommended paper

Plain paper	APP Blue Flagship 70g/m^2 APP Gold Flagship 80g/m^2 Advanced Agro Double A 80g/m^2
Labels	Avery Laser Label L7163

To get the bset print quality, we suggest using paper that meets the conditions mentioned below.

- Paper that is made for plain-paper copying
- Paper that is 70 to 90 g/m^2 (20 to 24 lb)
- Neutral paper, not acidic or alkaline paper
- Long-grain paper
- Paper with a moisture content of approximately 5%.

CAUTION

DO NOT use ink jet paper because it may cause a paper jam or damage your printer.

Note

If you use paper that is not recommended, a paper jam or misfeed may occur in the printer.

Especially when paper that satisties the conditions mentioned above is not available in your country, we recommend testing various papers before purchasing large quantities.

To help you choose which paper to use with this printer, see *Important information for choosing your paper* on page 162.

Should you need further information on recommended paper, please contact local Brother office in your country.

Types of envelopes

Most envelopes will be suitable for your printer. However, some envelopes may have feed and print quality problems due to the way they have been made. A suitable envelope should have edges with straight, well-creased folds and the leading edge should not be thicker than two pieces of paper. The envelope should lie flat and not be of baggy or flimsy construction. You should buy quality envelopes from a supplier who understands that you will be using the envelopes in a laser printer. Before you print a lot of envelopes, test one to make sure that the print results are what you want.

Brother does not recommend a particular envelope because envelope manufacturers may change the envelope specifications. You are responsible for the quality and performance of the envelopes you use.

- Do not use damaged, curled, wrinkled, irregularly shaped, extremely shiny or textured envelopes.
- Do not use envelopes with clasps, snaps, tie strings, self-adhesive components, windows, holes, cutouts or perforations.
- Do not use envelopes that are of a baggy construction, not sharply creased, embossed (have raised writing on them) or pre-printed on the inside.
- Do not use envelopes that were previously printed by a laser printer.
- Do not use envelopes that cannot be arranged when put in a pile.
- Do not use envelopes that are made of paper that weighs more than the paper weight specifications for the printer.
- Do not use envelopes that have been badly made, with edges that are not straight or consistently square.

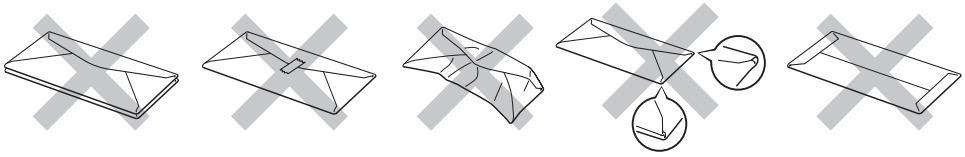

If you use any of the types of envelopes listed above, they may damage your printer. This damage is not covered under any Brother warranty or service agreement.

Note

- Do not put different types of paper in the paper tray at the same time because it may cause paper jams or misfeeds.
- Do not print envelopes using duplex printing.
- You must choose the same paper size from your application as the paper in the tray.

Unprintable area

The area of the paper that cannot be printed on is shown in the table below:

Portrait

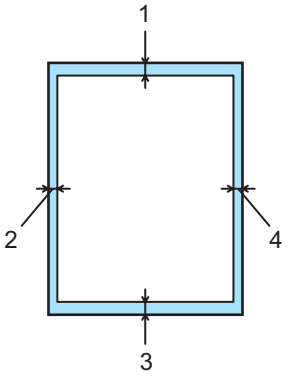

Landscape

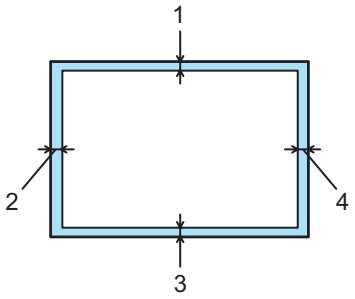

	Windows® Printer Driver Macintosh® printer driver	**BRScript Driver for Windows® and Macintosh® (HL-4050CDN only)**
1	4.23 mm (0.16 in.)	4.32 mm (0.17 in.)
2	4.23 mm (0.16 in.)	4.32 mm (0.17 in.)
3	4.23 mm (0.16 in.)	4.32 mm (0.17 in.)
4	4.23 mm (0.16 in.)	4.32 mm (0.17 in.)

Printing methods

Printing on plain paper

Printing on plain paper from Tray 1, 2

(For the recommended paper to use, see *About paper* on page 6.)

1. Choose the following from the printer driver:
   Paper Size ..... (1)
   Media Type ..... (2)
   Paper Source ..... (3)
   and any other settings.

   ■ **Windows® printer driver**

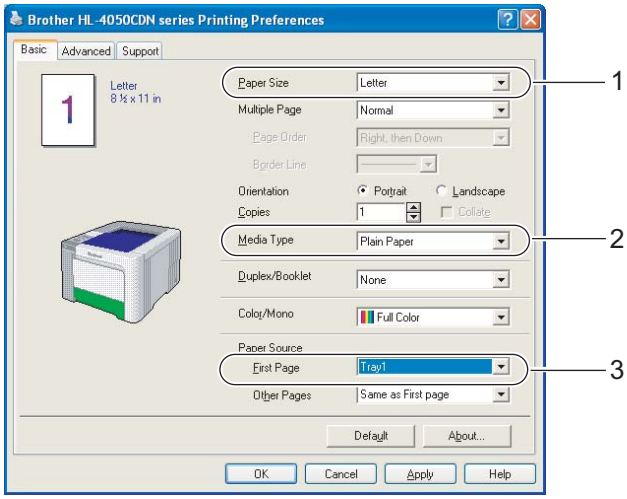

■ BR-Script printer driver for Windows® (HL-4050CDN only)

Paper Size ..... (1)
Media Type ..... (2)
Paper Source ..... (3)

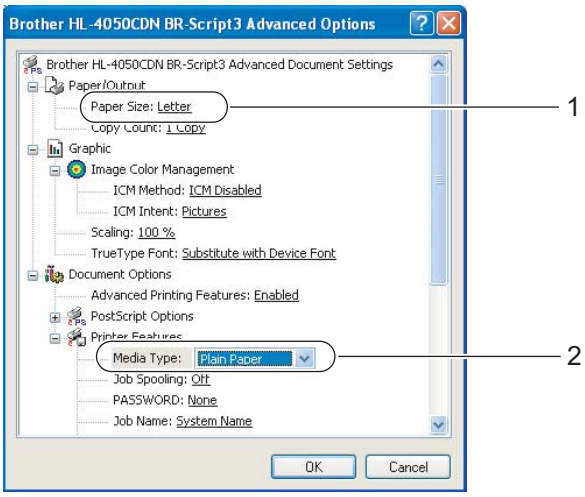

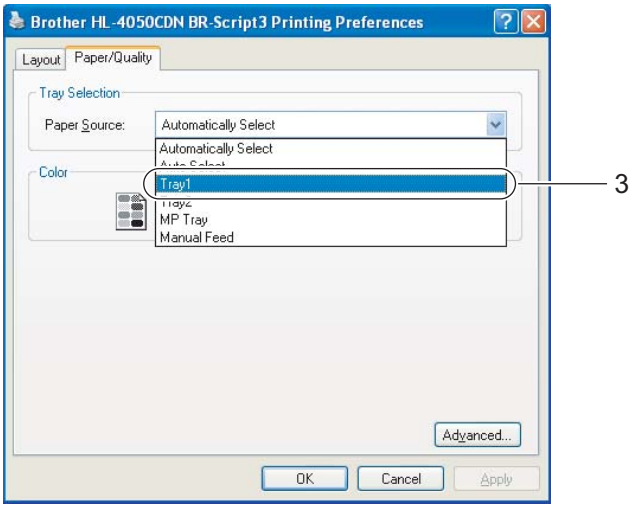

Note

To use the BR-Script printer driver you must install the driver using the Custom Install from the CD-ROM.

■ Macintosh® printer driver

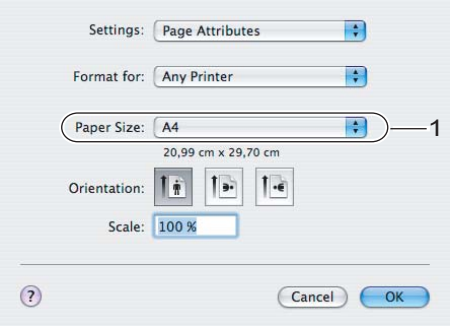

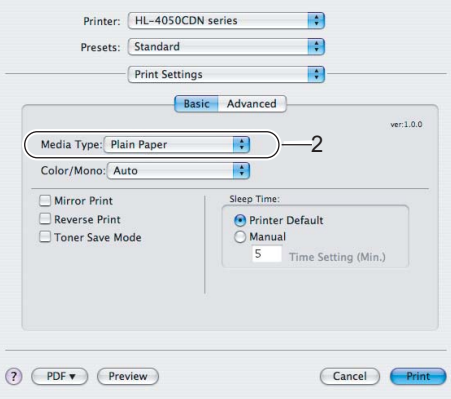

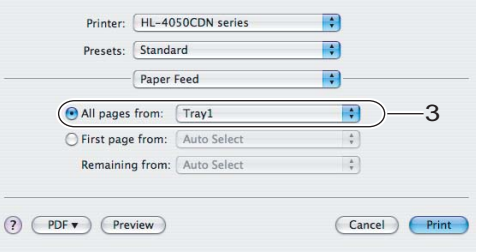

2 Pull the paper tray completely out of the printer.

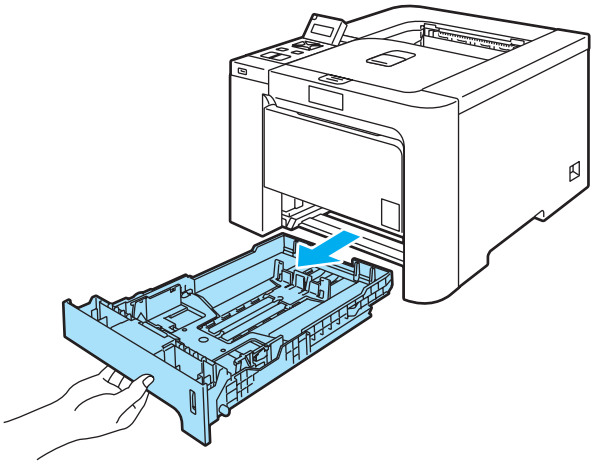

3 While pressing the green paper-guide release lever, slide the paper guides to fit the paper size. Make sure that the guides are firmly in the slots.

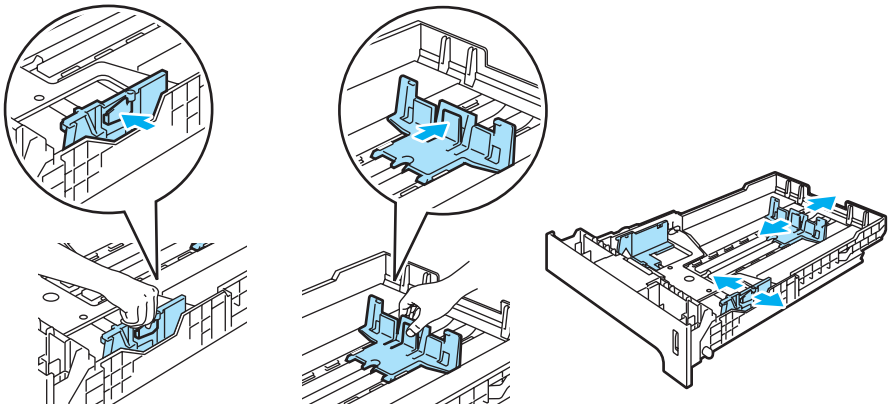

4 Put paper in the tray, and make sure that the paper is below the maximum paper mark (▼). The side to be printed on must be face down.

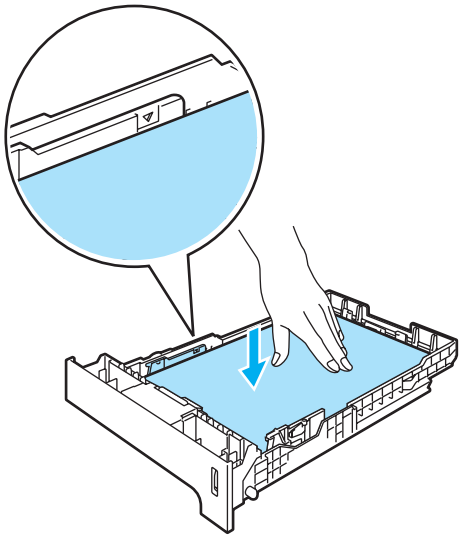

5 Put the paper tray firmly back in the printer. Make sure that it is completely inserted into the printer.

6 Lift up the support flap to prevent paper from sliding off the face-down output tray, or remove each page as soon as it comes out of the printer.

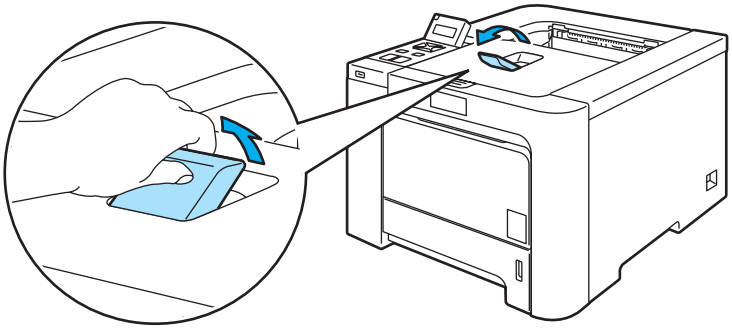

7 Send the print data to the printer.

Printing on plain paper or bond paper from the MP tray

(For the recommended paper to use, see *About paper* on page 6.)

1. Choose the following from the printer driver:
   Paper Size ..... (1)
   Media Type ..... (2)
   Paper Source ..... (3)
   and any other settings.

■ Windows® printer driver

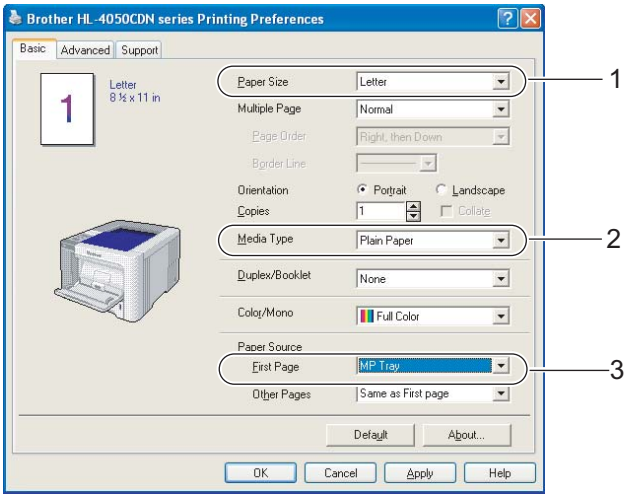

■ BR-Script printer driver (HL-4050CDN only)

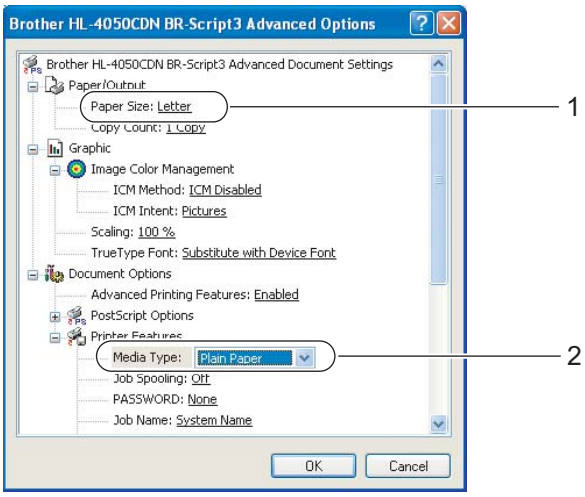

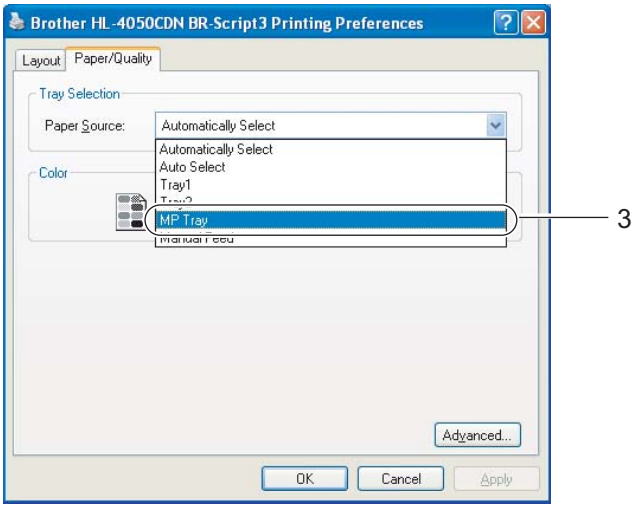

Note

To use the BR-Script printer driver you must install the driver using the Custom Install from the CD-ROM.

■ **Macintosh® printer driver**

Paper Size ..... (1)
Media Type ..... (2)
Paper Source ..... (3)

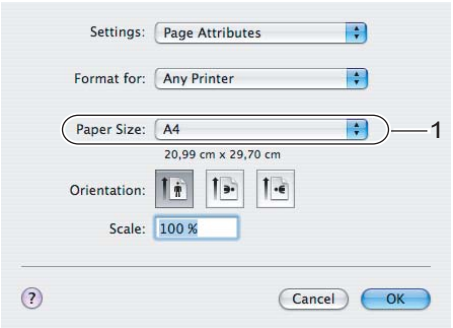

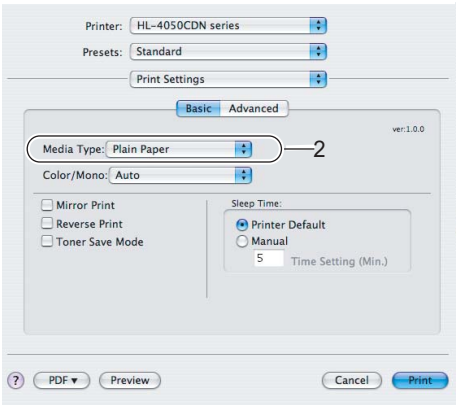

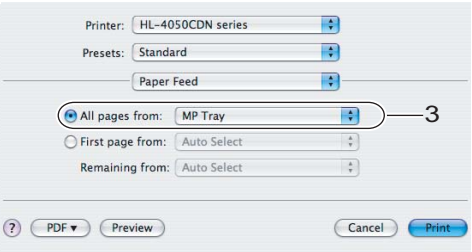

2 Open the MP tray and lower it gently.

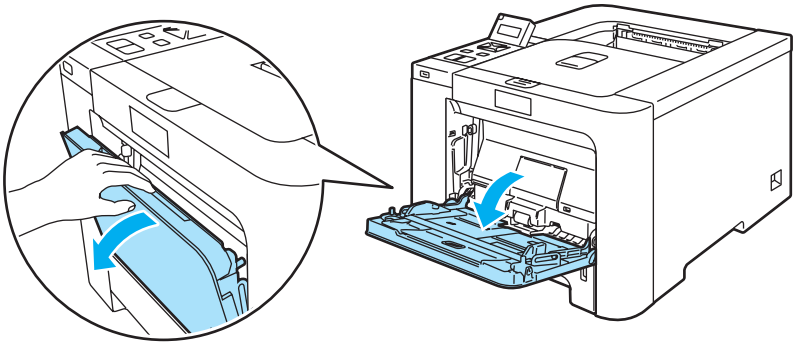

3 Pull out the MP tray support and unfold the flap (1).

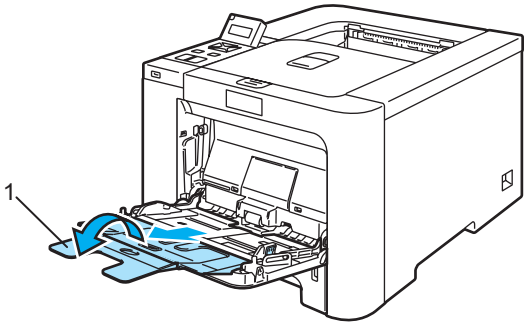

4 Lift up the support flap to prevent paper from sliding off the face-down output tray, or remove each page as soon as it comes out of the printer.

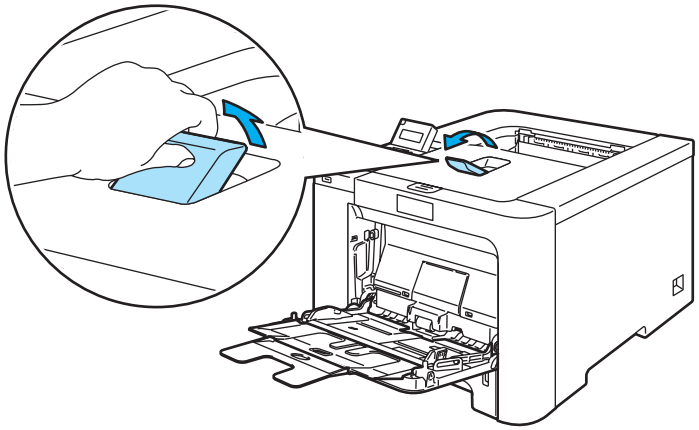

5 Put paper in the MP tray. Make sure that the paper stays under the maximum paper mark (1). The side to be printed on must be face up with the leading edge (top of the paper) in first.

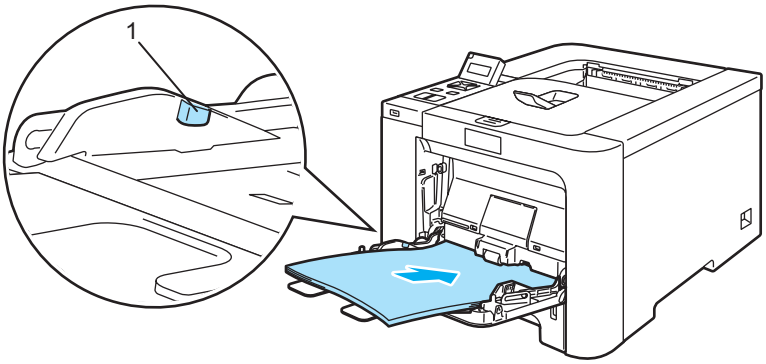

6 While pressing the paper-guide release lever, slide the paper guide to fit the paper size.

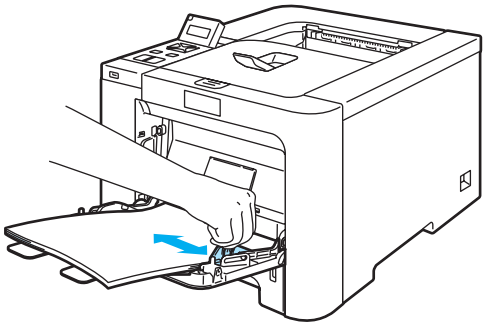

7 Send the print data to the printer.

Printing on thick paper, labels and envelopes

(For the recommended paper to use, see *About paper* on page 6 and *Types of envelopes* on page 8.)

1. Choose the following from the printer driver:
   Paper Size ..... (1)
   Media Type ..... (2)
   Paper Source ..... (3)
   and any other settings.

■ Windows® printer driver

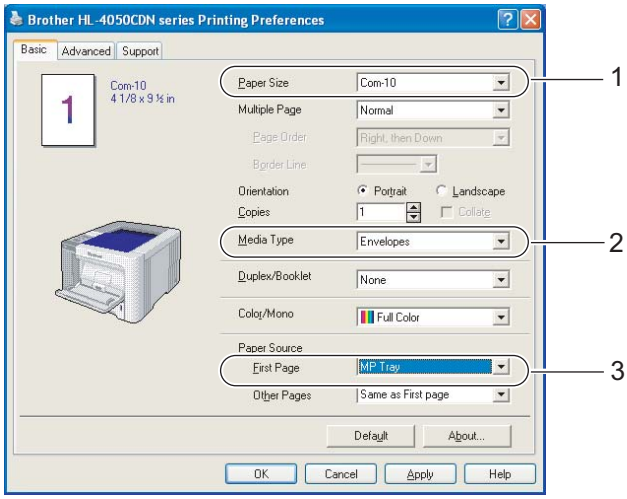

■ BR-Script printer driver (HL-4050CDN only)

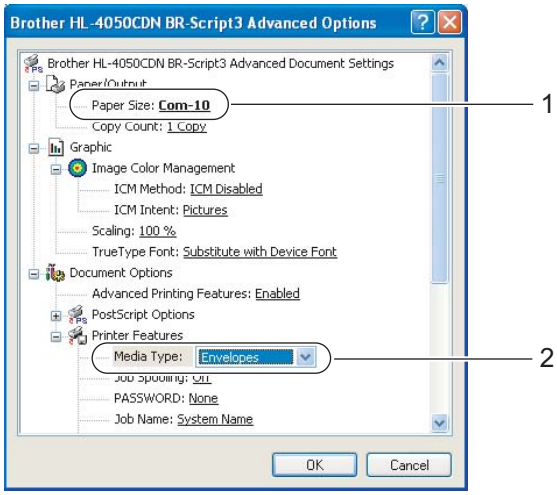

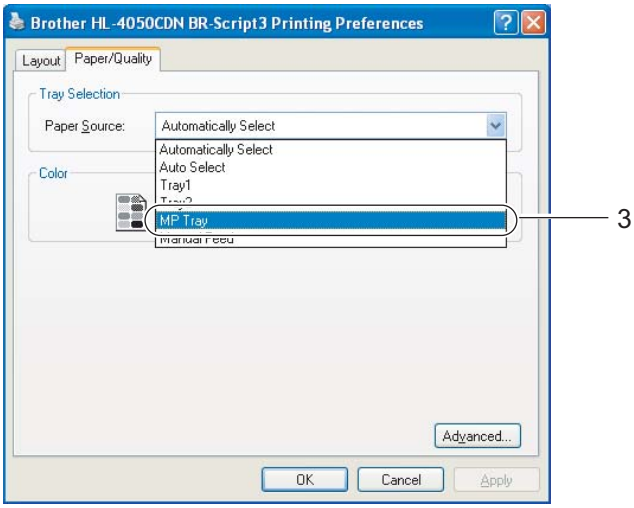

Note

- To use the BR-Script printer driver you must install the driver using the Custom Install from the CD-ROM.
- When you use Envelope #10, choose **Com-10** for the **Paper Size**.
- For other envelopes which are not listed in the printer driver, such as Envelope #9 or Envelope C6, choose **User Defined...** (For more information on envelope sizes, see *Paper size* on page 176.)

■ **Macintosh® printer driver**

Paper Size ..... (1)
Media Type ..... (2)
Paper Source ..... (3)

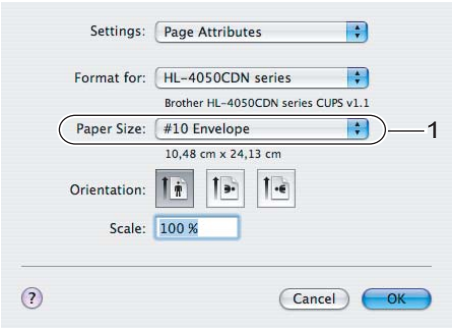

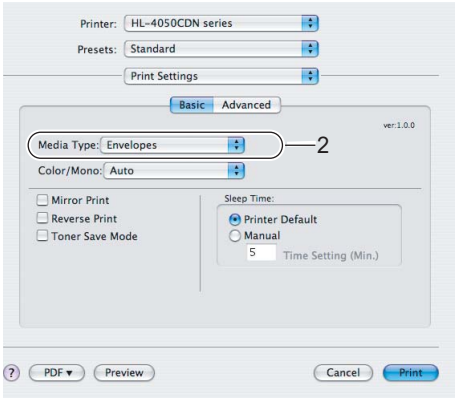

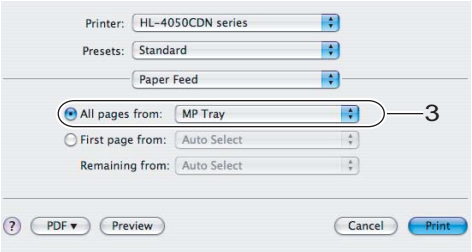

Note

For other envelopes which are not listed in the printer driver, such as Envelope #9 or Envelope C6, choose **Custom Page Sizes**. (For more information on envelope sizes, see *Paper size* on page 176.)

2 Open the MP tray and lower it gently.

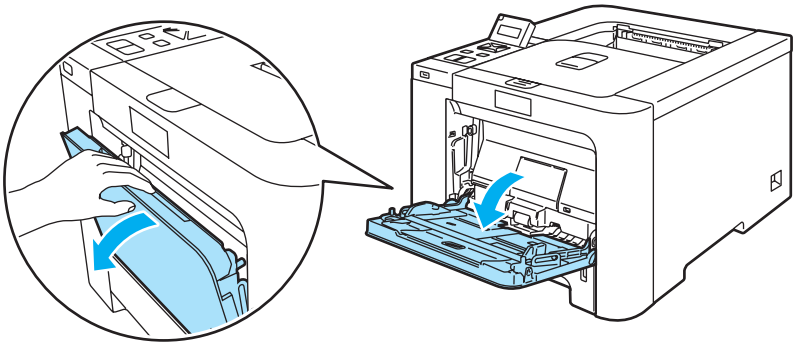

3 Pull out the MP tray support and unfold the flap (1).

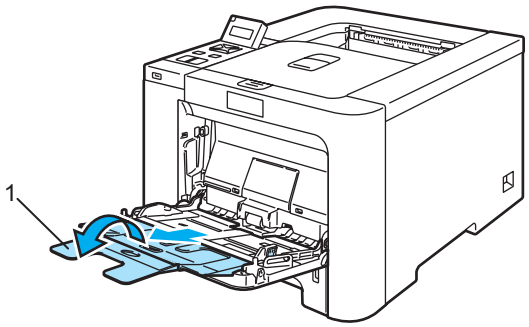

4 Lift up the support flap to prevent paper from sliding off the face-down output tray, or remove each page as soon as it comes out of the printer.

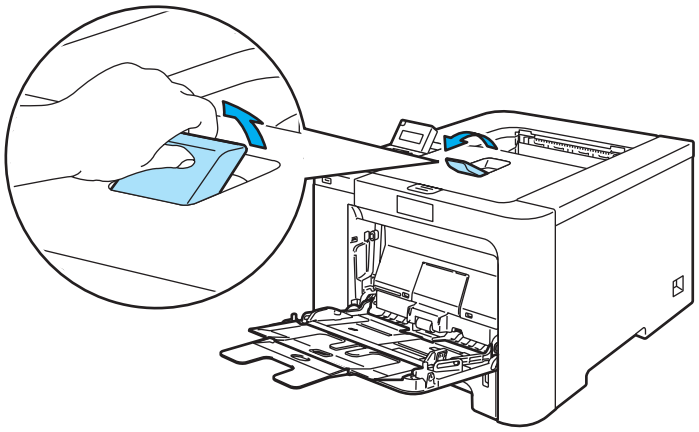

5 Put paper in the MP tray. Make sure that the paper stays under the maximum paper mark (1).

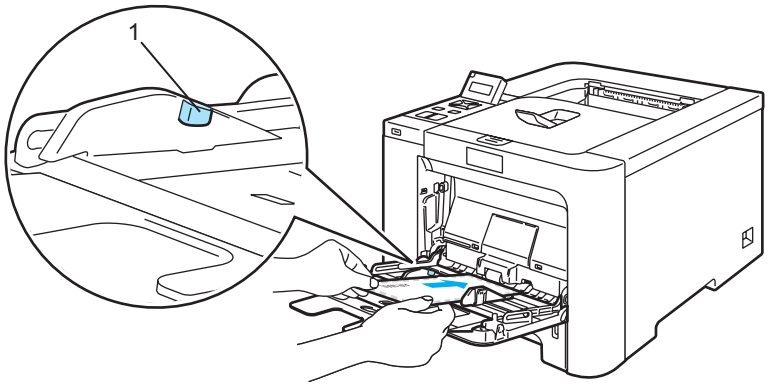

Note

- Do not put more than 3 envelopes in the MP tray.
- Envelope joints that are sealed by the manufacturer should be secure.
- The side to be printed on must be face up.
- All sides of the envelope should be properly folded without wrinkles or creases.

6 While pressing the paper-guide release lever, slide the paper guide to fit the paper size.

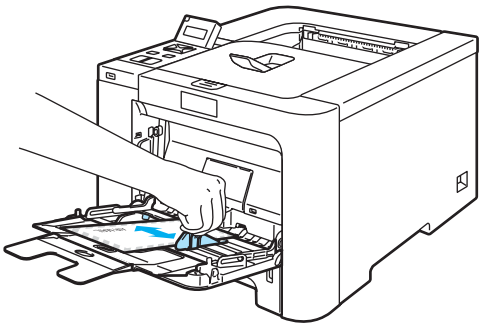

7 Send the print data to the printer.

Note

- Remove each sheet or envelope at once after printing. Stacking the sheets or envelopes may cause the paper to jam or curl.
- If envelopes get smudged during printing set the **Media Type** to **Thick Paper** or **Thicker Paper** to increase the fixing temperature.
- If the envelope is creased after they are printed, see *Improving the print quality* on page 158.
- (For Windows® users) If DL size double flap envelopes are creased after printing, choose **DL Long Edge** in **Paper Size**, from the **Basic** tab. Put a new DL size double-flap envelope in the MP tray with the longest edge of the envelope in first, then print again.

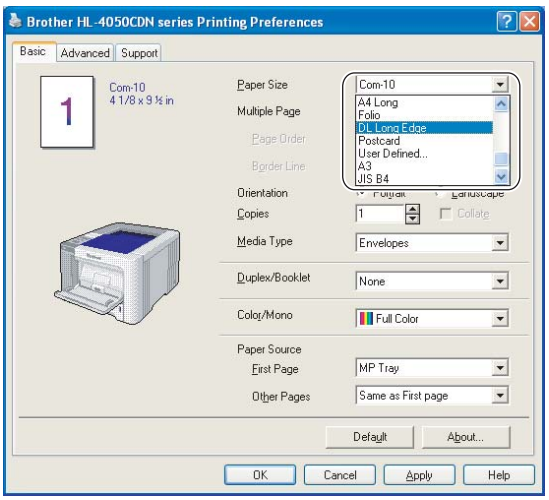

- When you put paper in the MP tray, remember the following:
  - Put the leading edge (top of the paper) in first and push it gently into the tray.
  - Make sure that the paper is straight and in the proper position in the MP tray. If it is not, the paper may not be fed properly, resulting in a skewed printout or a paper jam.

Duplex printing

The supplied printer drivers for Windows® 2000/XP/XP Professional x64 Edition, Windows Vista™, Windows Server® 2003/Windows Server® 2003 x64 Edition and Mac OS® X 10.2.4 or greater all enable duplex printing. For more information about how to choose the settings, see the **Help** text in the printer driver.

Guidelines for printing on both sides of the paper

- If the paper is thin, it may wrinkle.
- If paper is curled, straighten it and then put it back in the paper tray or the MP tray.
- If the paper is not feeding properly, it may be curled. Remove the paper and straighten it.
- When you use the manual duplex function, it is possible that there may be paper jams or poor print quality. (If there is a paper jam, see *Paper jams and how to clear them* on page 145. If you have a print quality problem, see *Improving the print quality* on page 158.)

Note

- The screens in this section are from Windows® XP. The screens on your computer may vary depending on your operating system.
- Use A4 or A4 Long size paper when you use the automatic duplex printing function.
- Make sure that the back cover is closed.
- Make sure that the paper tray is completely inserted into the printer.
- If paper is curled, straighten it and then put it back in the paper tray.
- You should use plain paper, recycled paper or thin paper. Do not use bond paper.

Manual duplex printing

- The BR-Script printer driver (PostScript® 3™ emulation) does not support manual duplex printing.
- If you are using the Macintosh® Printer Driver, see *Duplex Printing* on page 56.

Manual duplex printing from the paper tray

1. In the printer driver choose the **Advanced** tab, click the Duplex icon, and then choose the **Manual Duplex** printing mode, and from the **Basic** tab choose the Paper Source to be **Tray1**.
2. Send the data to the printer.
   The printer will automatically print all the even-numbered pages on one side of the paper first.

3 Remove the printed even-numbered pages from the output tray and put them back in the paper tray with the side to be printed on (blank side) face down. Follow the instructions on the computer screen.

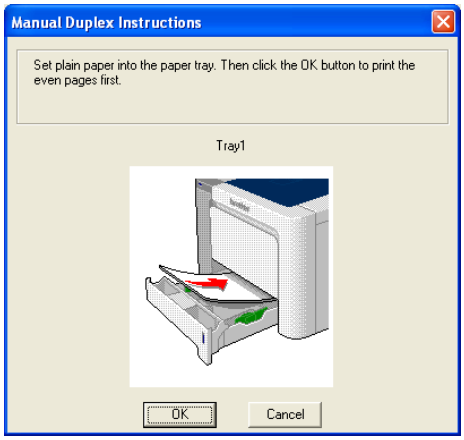

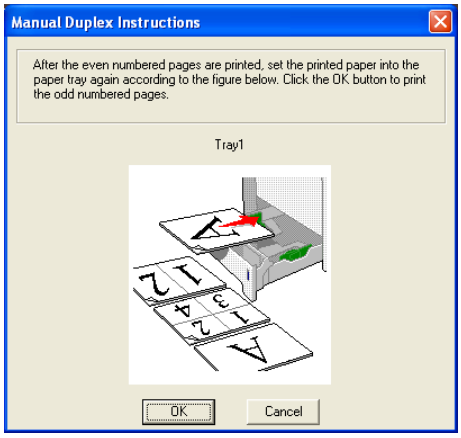

4 The printer will now automatically print all the odd-numbered pages on the other side of the paper.

Note

- If you choose the **Paper Source** to be **Auto Select**, put the printed even-numbered pages in the MP tray.
- When you put paper in the paper tray, first empty the tray. Next, put the printed pages in the tray, with the printed side face up. (Do not add the printed pages to the top of a stack of unprinted paper.)

Manual duplex printing from the MP tray

Note

Before putting the sheets back in the MP tray, you will have to straighten them, or you may get paper jams.

1 In the printer driver choose the **Advanced** tab, click the Duplex icon, then choose the **Manual Duplex** printing mode, and then from the **Basic** tab choose the **Paper Source** to be **MP Tray**.

2 Put the paper in the MP tray with the side to be printed on first facing up. Follow the instructions on the computer screen. Repeat this step until you have printed all the even-numbered pages.

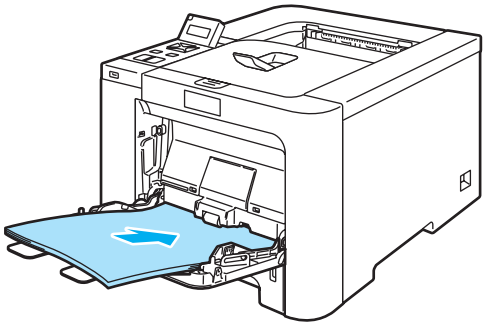

3 Remove the printed even-numbered pages from the output tray and then, in the same order, put them back into the MP tray. Put the paper with the side to be printed on (the blank side) face up. Follow the instructions on the computer screen.

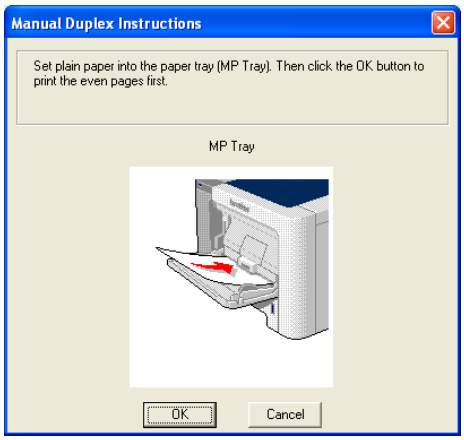

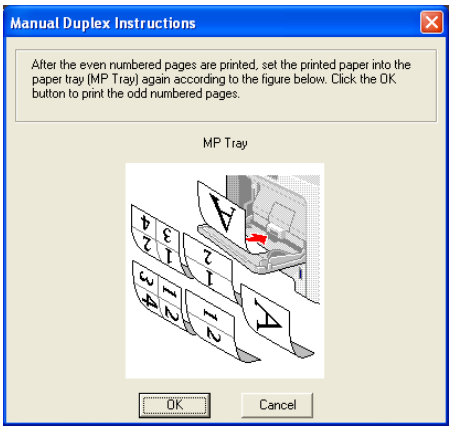

4 The printer will now automatically print all the odd-numbered pages on the other side of the paper.

Paper orientation for manual duplex printing

The printer prints the second page first.

If you print 10 pages on 5 sheets of paper, it will print page 2 and then page 1 on the first sheet of paper. It will print page 4 and then page 3 on the second sheet of paper. It will print page 6 and then page 5 on the third sheet of paper, and so on.

When doing manual duplex printing, the paper must be put in the paper tray in the following way:

- For the paper tray:
  - Put the side to be printed on face down with the leading edge (top) of the paper at the front of the tray.
  - To print on the second side, put the paper face up, with the leading edge (top) of the paper at the front of the tray.
  - If letterhead paper is used, put the paper in the tray with the heading face up at the front of the tray.
  - To print on the second side, put the heading face down at the front of the tray.
- For the multi-purpose tray (MP tray):
  - Put the side to be printed on face up with the leading edge (top) of the paper in first.
  - To print on the second side, put the paper face down, with the leading edge (top) of the paper in first.
  - If letterhead paper is used, put it in with the heading face down and in first.
  - To print on the second side, put the heading face up and in first.

Automatic duplex printing (HL-4050CDN only)

If you are using the Macintosh® Printer Driver, see *Duplex Printing* on page 56.

1. Put paper in the paper tray or MP tray.

2. **For the Windows® printer driver**

   1. Open the **Properties** dialog box in the printer driver.
   2. From the **General** tab, click the **Printing Preferences** icon.
   3. From the **Advanced** tab, click the **Duplex** icon.
   4. Make sure that **Use Duplex Unit** has been chosen.
   5. Click **OK**. The printer will print on both sides of the paper automatically.

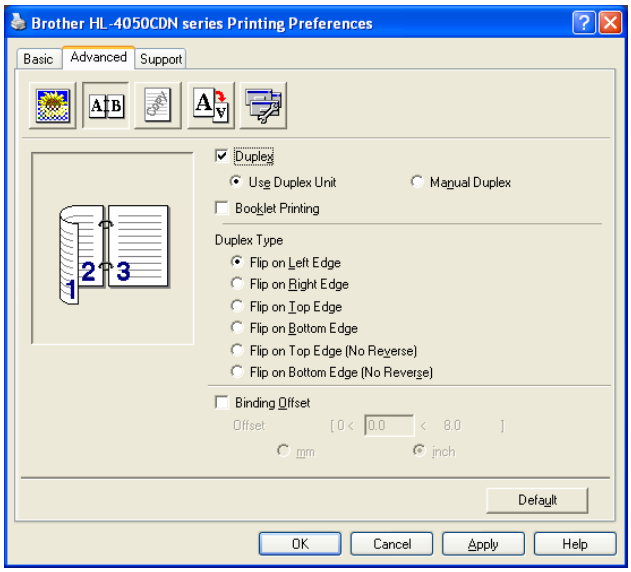

For the BR-Script printer driver

1. Open the **Properties** dialog box in the printer driver.
2. From the **General** tab, click the **Printing Preferences** icon.
3. From the **Layout** tab, choose **Orientation**, **Print on Both Sides (Duplex)** and **Page Order**.

4 Click **OK**. The printer will print on both sides of the paper automatically.

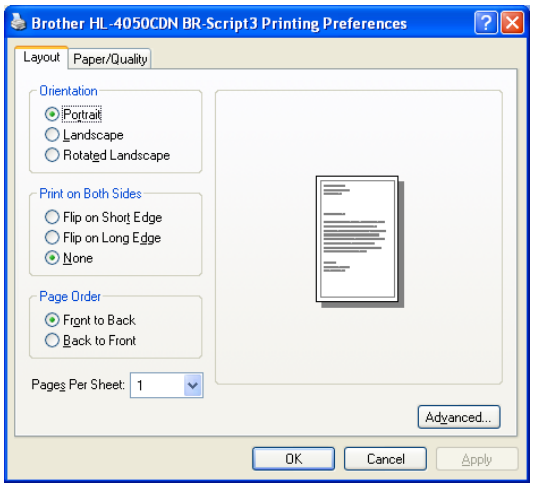

Booklet printing (for Windows® printer driver)

1. Put paper in the paper tray or MP tray.
2. Open the **Properties** dialog box in the printer driver.
3. From the **General** tab, choose the **Printing Preferences** icon.
4. From the **Advanced** tab, click the Duplex icon, then choose **Duplex** and **Use Duplex Unit** (HL-4050CDN only) or **Manual Duplex**, and then choose **Booklet Printing**.
5. Click **OK**.

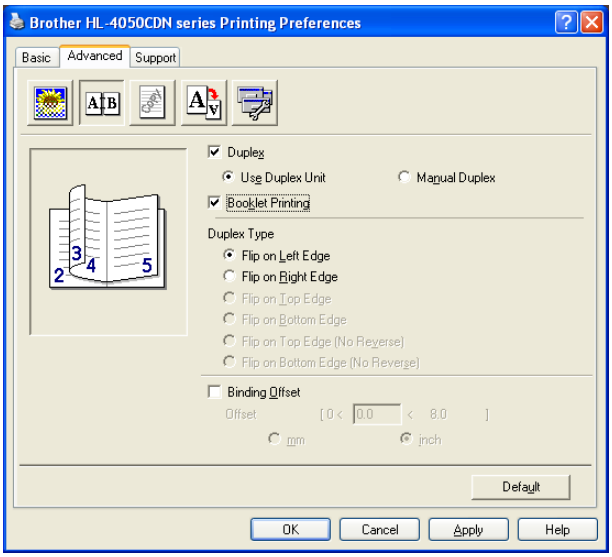

Printing photos from a digital camera

Your Brother printer supports the PictBridge standard, allowing you to connect to and print photos directly from any PictBridge compatible digital camera. Even if your camera is not in PictBridge mode or does not support PictBridge, you can still print photos from a digital camera in Mass storage mode. See *Connecting a camera as a storage device* on page 28.

PictBridge requirements

- The machine and the digital camera must be connected using a suitable USB cable.
- The image file must be taken with the digital camera you want to connect to the printer.

Setting your digital camera

Make sure your camera is in PictBridge mode. The following PictBridge settings may be available from the LCD of your PictBridge compatible camera. Depending on your camera some of these setting may not be available.

- Copies
- Qualities
- Paper Size
- Date Print
- File Name Print
- Layout

You can also set the following PictBridge settings by using the control panel.

Menu	Submenu	Options	
PictBridge	Paper Size [1]	Letter / **A4*** / B5 / A5 / B6 / A6	See *PictBridge* on page 84
	Orientation	**Portrait*** / Landscape	
	Date & Time [1]	**Off*** /On	
	File Name [1]	**Off*** / On	
	Print Quality [1]	**Normal*** / Fine	
Paper Tray	Tray Use	**Auto***/ MP Only / Tray1 Only / Tray2 Only	See *Paper Tray* on page 78
	Duplex (HL-4050CDN only)	**Off***/ On (Long Bind) / On(Short Bind)	

[1] These menu selections are also set by your camera. Camera settings are prioritized as long as your camera is not set to use the Printer Settings (Default settings).

Note

The names and availability of each setting depends on the specification of your camera.

Please refer to the documentation supplied with your camera for more detailed information on changing PictBridge settings.

Printing images

1. Make sure that your camera is turned off. Connect your camera to the USB direct interface (1) on the front of the printer using a suitable USB cable.

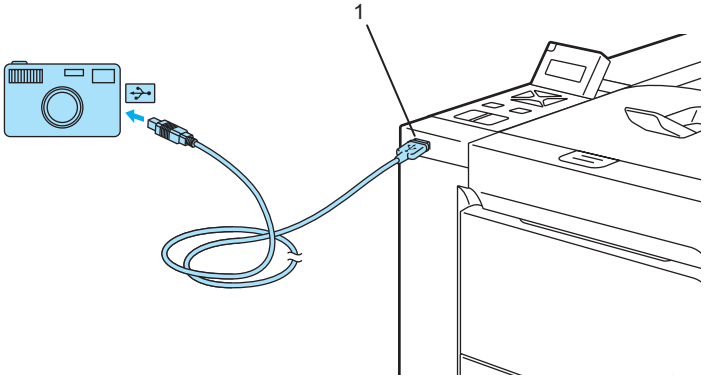

2. Turn on the camera.
   When the printer has recognized the camera, the LCD shows the following message:

   ```
   Camera Connected
   ```

3. Set your camera to print an image. Set the number of copies if you are asked.
   When the printer starts printing a photo, the LCD will show `Printing`.

Note

Please refer to the documentation supplied with your camera for detailed operations how to print using PictBridge.

CAUTION

DO NOT remove the digital camera from the USB direct interface until the printer has finished printing.

Connecting a camera as a storage device

Even if your camera is not in PictBridge mode, or does not support PictBridge, you can connect your camera as a normal storage device. This enables you to print photos from your camera. Follow the steps for *Printing data directly from the USB flash memory drive* on page 30.

(If you would like to print photos in PictBridge mode, see *Setting your digital camera* on page 26.)

Note

The name of the storage mode and operation differs among digital cameras. Please refer to the documentation supplied with your camera for detailed information, such as how to switch from PictBridge mode to mass storage mode.

DPOF printing

DPOF stands for Digital Print Order Format.

Major digital camera manufacturers (Canon Inc., Eastman Kodak Company, Fuji Photo Film Co. Ltd., Matsushita Electric Industrial Co. Ltd. and Sony Corporation) created this standard to make it easier to print images from a digital camera.

If your digital camera supports DPOF printing, you will be able to choose on the digital camera display the images and number of copies you want to print.

The following DPOF settings are available:

- 1 in 1 printing
- Copies

Printing data from a USB flash memory drive with direct print

With the Direct Print feature, you do not need a computer to print data. You can print by just plugging your USB flash memory drive into the printer´s USB direct interface.

Note

There might be some USB flash memory drives that will not work with the printer.

Supported file formats

Direct print supports the following file formats:

- PDF version1.6 [1]
- JPEG
- Exif+JPEG
- PRN (created by HL-4040CN or HL-4050CDN printer driver)
- TIFF (scanned by all MFC or DCP Brother models)
- PostScript® 3™(created by the HL-4050CDN BRScript3 printer driver)

[1] The data including JBIG2 image file, JPEG2000 image file and layered files are not supported.

Creating a PRN or PostScript® 3™ (HL-4050CDN only) file for direct printing

Note

The screens in this section may vary depending on your application and operating system.

1. From the menu bar of an application, click **File**, then **Print**.
2. Choose HL-4040CN or HL-4050CDN (1) and check the **Print to file** box (2). Click **OK**.

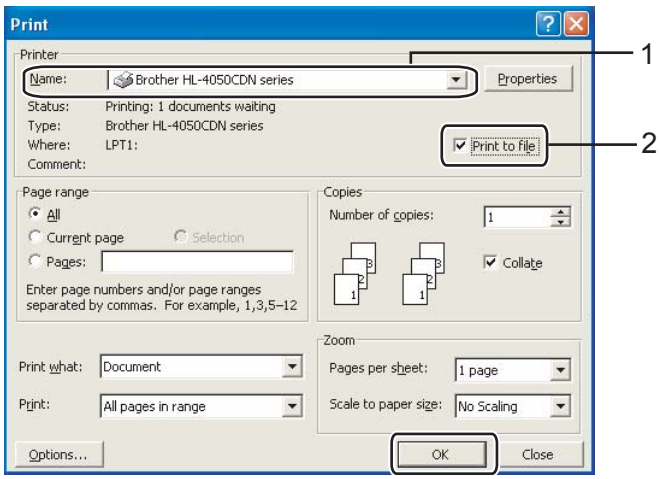

3 Choose the folder you want to save the file to and enter the file name if you are prompted to. If you are prompted for a file name only, you can also specify the folder you want to save the file in by entering the directory name. For example:

C:\Temp\FileName.prn

If you have a USB flash memory drive connected to your computer, you can save the file directly to the USB flash memory drive.

Printing data directly from the USB flash memory drive

1 Connect your USB flash memory drive to the USB Direct Interface (1) on the front of the printer.

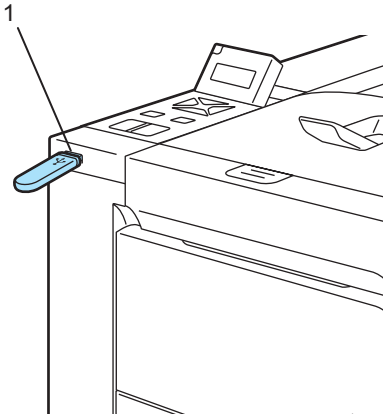

When the printer has recognized the USB flash memory drive, the LCD shows the following message.

```
Checking device
Please wait
```

↓

```
Direct Print
1./XXXX.FOLDER1
```

2 The folder names or the file names will be shown on the LCD. Press the **+** or **-** button to choose the folder name or file name and press **OK**. If you do not need to change the current default settings, press **Go** and go to Step ❹.

```
Direct Print
3.XXXX.PDF
```

Note

- The file names will be shown after you choose a folder and press **OK**. If you want to choose a file in another folder, press **back** to return to the folder name. And then press the **+** or **-** button to choose a different folder.

```
Direct Print
1./XXXX.FOLDER1
        ↓
/XXXX.FOLDER1
3.XXXX.PDF
```

Press **OK**.

```
Direct Print
1./XXXX.FOLDER1
        ↑
/XXXX.FOLDER1
3.XXXX.PDF
```

Press **Back**.

- If you want to print an index of the files, choose `Index Print`. The `Index Print` selection can be found after you scroll down through all the file names. Press **OK** or **Go**.

```
Direct Print
Index Print
```

If your files are in a folder, choose the folder and then scroll down to `Index Print`.

- File names containing more than 8 characters will appear on the LCD as the first 6 characters of the file name followed by a tilde mark (~) and a number. For example, "HOLIDAY2007.JPG" would appear as "HOLIDA~1.JPG".
- Only the following characters can be displayed on the LCD:

  ABCDEFGHIJKLMNOPQRSTUVWXYZ0123456789$%' `@{}~!#()&_^-

3. Choose the following settings.
   Press the **+** or **-** button to choose each option. Press **OK** to go to the next setting.
   Pressing **Back** allows you to return to the previous setting.

```
Print File Set  ↔  Print File Set
Paper Size         PDF Option
    ↕                  ↕
Print File Set     Print File Set
Multiple Page      Print Quality
    ↕                  ↕
Print File Set     Print File Set
Orientation        Output Color
    ↕                  ↕
Print File Set     Print File Set
Duplex             Tray Use
    ↕                  ↕
Print File Set  ↔  Print File Set
Media Type         Collate
```

Press **Go** when you have finished.

Note

You can change the default settings for Direct Print by using the control panel when the printer is not in the Direct Print mode.

Menu	Sub menu	Options [1]	
Paper Tray	Tray Use	**Auto***/MP Only/Tray1 Only/Tray2 Only	See *Paper Tray* on page 78
	Duplex (HL-4050CDN only)	**Off***/On(Long Bind)/On(Short Bind)	
Print Menu	Output Color	**Auto***/Color/Mono	See *Print Menu* on page 80
Direct Print	Paper Size	Letter/Legal/**A4***/Executive/JIS B5/B5/A5/B6/A6/A4Long/Folio	See *Direct Print* on page 83
	Media Type	**Plain Paper***/Thick Paper/Thicker Paper/Thin Paper/Recycled Paper/Bond Paper	
	Multiple Page	**1in1***/2in1/4in1/9in1/16in1/25in1/1in2×2pages/1in3×3pages/1in4×4pages/1in5×5pages	
	Orientation	**Portrait***/Landscape	
	Print Quality	**Normal***/Fine	
	PDF Option	**Document***/Document&Stamps/Document&Markup	
	Index Print	**Simple***/Details	

[1] The default settings are shown in Bold with an asterisk.

4 Press the **+** or **-** button to enter the number of copies you want. Press **OK** or **Go**.

```
Copies
= 1
```

↓

```
Direct Print
Printing
```

CAUTION

DO NOT remove the USB flash memory from the USB direct interface until the printer has finished printing.

3 Driver and Software

Printer driver

A printer driver is software that translates data from the format used by a computer to the format that a particular printer needs. Typically, this format is page description language (PDL).

The printer drivers for the supported versions of Windows® and Macintosh® are on the CD-ROM we have supplied or on the Brother Solutions Center at http://solutions.brother.com. Install the drivers by following the Quick Setup Guide. The latest printer driver can be downloaded from the Brother Solutions Center at http://solutions.brother.com.

(If you want to uninstall the printer driver, see *Uninstalling the printer driver* on page 64.)

For Windows®

- Windows® printer driver (the most suitable printer driver for this product)
- BR-Script (PostScript® 3™ language emulation) printer driver (HL-4050CDN only) [1]

[1] Install the driver using the Custom Install from the CD-ROM.

For Macintosh®

- Macintosh® printer driver (the most suitable printer driver for this product)
- BR-Script (PostScript®3™ language emulation) printer driver (HL-4050CDN only) [1]

[1] To install the driver, see *Installing the BR-Script3 printer driver* on page 61.

For Linux [1] [2]

- LPR printer driver
- CUPS printer driver

[1] Download the printer driver for Linux from http://solutions.brother.com or a link on the CD-ROM we have supplied.

[2] Depending on Linux distributions, the driver may not be available.

Note

- For more information about Linux printer driver, visit us at http://solutions.brother.com.
- The printer driver for Linux may be released after the initial release of this product.

	Windows® printer driver	BR-Script printer driver (HL-4050CDN only)	Macintosh® Printer Driver	LPR / CUPS printer driver [1]
Windows® 2000 Professional	ⓘ	ⓘ		
Windows® XP Home Edition	ⓘ	ⓘ		
Windows® XP Professional	ⓘ	ⓘ		
Windows Vista™	ⓘ	ⓘ		
Windows Server® 2003	ⓘ	ⓘ		
Windows® XP Professional x64 Edition	ⓘ	ⓘ		
Windows Server® 2003 x64 Edition	ⓘ	ⓘ		
Mac OS® X 10.2.4 or greater		ⓘ	ⓘ	
Linux (Mandrake, Red Hat, SuSE Linux, Debian) [1]				ⓘ

[1] Download the printer driver from http://solutions.brother.com or a link on the supplied CD-ROM.
If you download from a link on CD-ROM, click **Install Other Drivers or Utilities**, then click **For Linux users** on the screen menu. Access to internet is required.

You can change the following printer settings when you print from your computer.

- Paper Size
- Multiple Page
- Orientation
- Copies
- Media Type
- Paper Source
- Print Quality
- Color Mode
- Duplex printing (Manual Duplex printing [1] / Duplex printing with Duplex Unit [3])
- Watermark [1] [2]
- Scaling
- Job Spooling
- Toner Save Mode
- Quick Print Setup [1] [2]
- Sleep Time
- Administrator [1] [2]
- Print Setting [1] [2]
- Header-Footer Print [1] [2]
- Color Calibration [1] [2]

[1] These settings are not available with the BR-script printer driver for Windows®.

[2] These settings are not available with the Macintosh® printer driver and the BR-Script printer driver for Macintosh®.

[3] This setting is not available for HL-4040CN.

Features in the printer driver (for Windows®)

(For more information, see the **Help** text in the printer driver.)

Note

- The screens in this section are from Windows® XP. The screens on your computer will vary depending on your operating system.
- If you are using Windows® 2000, XP, Windows Vista™ or Windows Server® 2003, you can access the **Printing Preferences** dialog box by clicking **Printing Preferences...** in the **General** tab of the **Printer Properties** dialog box.

Basic tab

You can also change settings by clicking the illustration on the left side of the **Basic** tab.

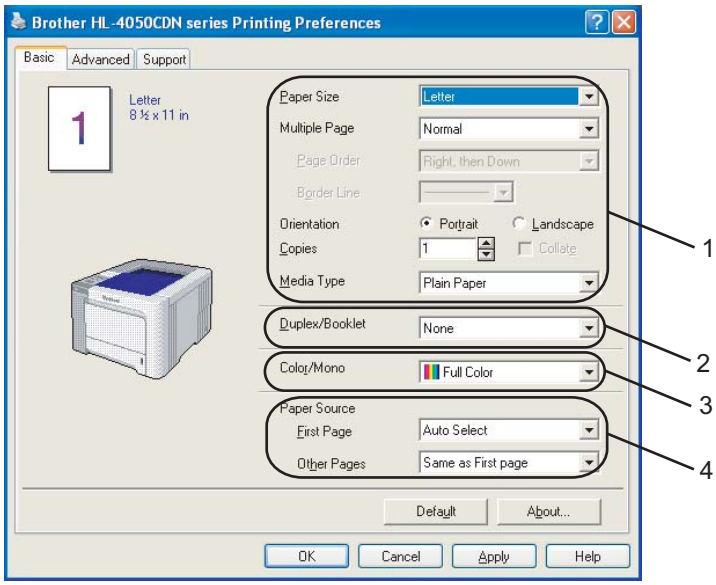

1. Choose the **Paper Size**, **Multiple Page**, **Orientation**, **Copies** and **Media Type** (1).
2. (HL-4050CDN only) Choose the **Duplex/Booklet** setting (2).
3. Choose the **Color/Mono** setting (3).
4. Choose the **Paper Source** (4).
5. Click **OK** to apply your chosen settings.
   To return to the default settings, click **Default**, then **OK**.

Paper Size

From the drop-down box choose the Paper Size you are using.

Multiple Page

The Multiple Page selection can reduce the image size of a page allowing multiple pages to be printed on one sheet of paper or enlarging the image size for printing one page on multiple sheets of paper.

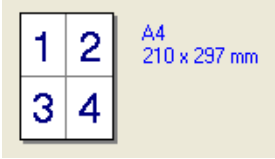

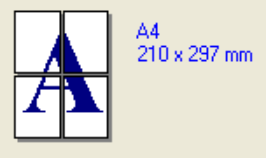

Page Order

When N in 1 option is selected, the page order can be selected from the drop-down list.

Border Line

When printing multiple pages on one sheet with the Multiple Page feature you can choose to have a solid border, dash border or no border around each page on the sheet.

Orientation

Orientation selects the position of how your document will be printed (**Portrait** or **Landscape**).

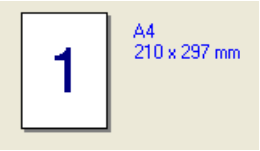

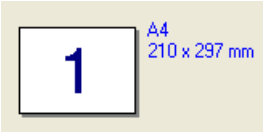

Copies

The copies selection sets the number of copies that will be printed.

Collate

With the Collate check box selected, one complete copy of your document will be printed and then repeated for the number of copies you selected. If the Collate check box is not selected, then each page will be printed for all the copies selected before the next page of the document is printed.

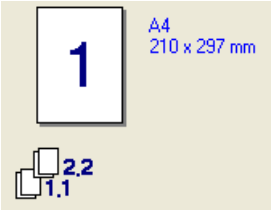

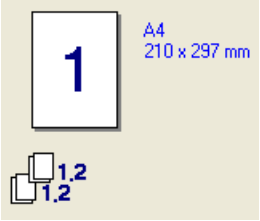

Media Type

You can use the following types of media in your printer. For the best print quality, select the type of media that you wish to use.

Plain Paper	**Thin Paper**	**Thick Paper**	**Thicker Paper**	**Bond Paper**	**Envelopes**
Env. Thick	**Env. Thin**	**Recycled Paper**	**Postcard**	**Label**	

Note

- When using ordinary plain paper (19 to 25 lb) choose **Plain Paper**. When using heavier weight paper, envelopes or rough paper choose **Thick Paper** or **Thicker Paper**. For bond paper, choose **Bond Paper**.
- When you use envelopes, choose **Envelopes**. If the toner is not fixed to the envelope correctly when **Envelopes** has been selected, choose **Env. Thick**. If the envelope is crumpled when **Envelopes** has been selected, choose **Env.Thin**.

Duplex / Booklet (HL-4050CDN only)

When you want to print a booklet or do duplex printing, use this function, and then from the **Advanced** tab, choose a **Duplex Type** (See *Duplex printing* on page 21).

Color/Mono

You can change the Color/Mono settings as follows:

■ Color

When your document contains color and you want to print it in color, select this mode.

■ Mono

Select this mode if your document has only black and grayscale text and/or objects. If your document contains color, selecting Mono mode prints your document in 256 levels of gray.

■ Auto

The printer checks the content of your documents for color. If color is detected, it prints in color. If no color content is detected, it prints in monochrome.

Note

If the Cyan, Magenta or Yellow toner runs out, choosing **Mono** will allow you to keep printing as long as the Black toner does not run out.

Paper Source

You can choose **Auto Select**, **Tray1**, **MP Tray** or **Manual** and specify separate trays for printing the first page and for printing from the second page onwards.

Advanced tab

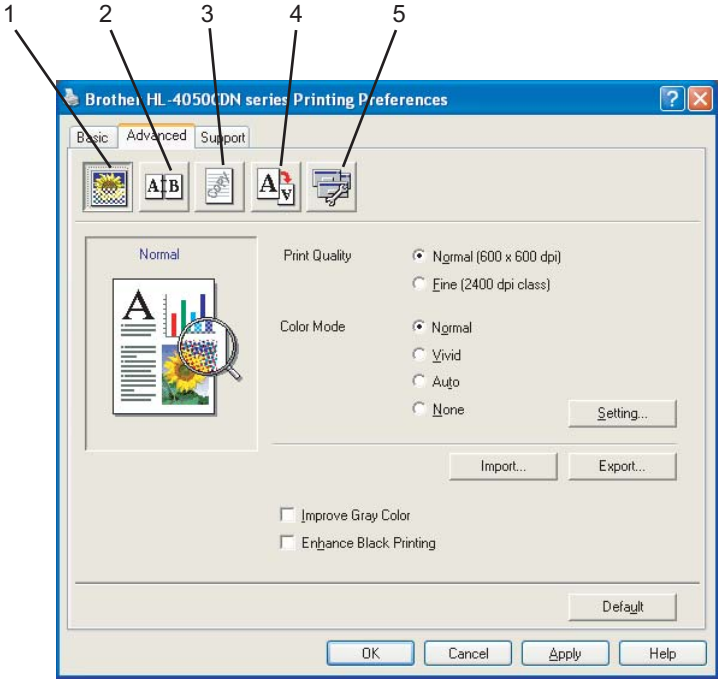

Change the tab settings by clicking one of the following icons:

- Print Quality (1)
- Duplex (2)
- Watermark (3)
- Page Setting (4)
- Device Options (5)

Print Quality

Print Quality

You can choose the following print quality settings.

- Normal

  600×600 dpi. Recommended for ordinary printing. Good print quality with reasonable print speeds.

- Fine

  2400 dpi class. The finest print mode. Use this mode to print precise images such as photographs. Since the print data is much larger than in normal mode, processing time / data transfer time and printing time will be longer.

Note

The print speed will change depending on what print quality setting you choose. Higher print quality takes longer to print, while lower print quality takes less time to print.

Color Mode

The following options are available in Color Matching mode:

- Normal

  This is the Default color mode.

- Vivid

  The color of all elements are adjusted to become a more vivid color.

- Auto

  The printer driver automatically selects the **Color Mode** type.

- None

Improve Gray Color

You can improve the image quality of a shaded area.

Enhance Black Printing

If a black graphic cannot be printed correctly, choose this setting.

Import

You can adjust the print configuration of a particular image by clicking **setting**. When you have finished adjusting the image parameters, such as brightness and contrast, you can import those settings as a print configuration file. Use the **Export** function to create a print configuration file from the current settings.

Export

You can adjust the print configuration of a particular image by clicking **setting**. When you have finished adjusting the image parameters, such as brightness and contrast, you can export those settings as a print configuration file. Use the **Import** function to load a previously exported configuration file.

Duplex Printing

Use Duplex Unit (HL-4050CDN only)

Check the **Duplex** box and then choose **Use Duplex Unit**. In this mode, the printer prints on both sides of the paper automatically. There are six types of duplex binding directions available for each orientation.

Manual Duplex

Check the **Duplex** box and choose **Manual Duplex**. In this mode, the printer prints all the even numbered pages first. Then the printer driver will stop and show the instructions required to re-install the paper. When you click **OK** the odd numbered pages will be printed. There are six types of manual duplex binding directions available for each orientation.

Booklet Printing

When you want to print a booklet, use this function. To make the Booklet, fold the printed pages down the middle.

Binding Offset

If you check the Binding Offset option, you can also specify the offset for binding in inches or millimeters.

Watermark

You can put a logo or text into your documents as a watermark.

You can choose one of the preset watermarks, or you can use a bitmap file or text file that you have created.

When you use a bitmap file as a watermark, you can change the size of the watermark and put it anywhere you like on the page.

When you use text as a watermark, you can change the font, color and angle settings.

Page Setting

You can change the print image scaling and choose **Mirror/Reverse print** options.

Device Options

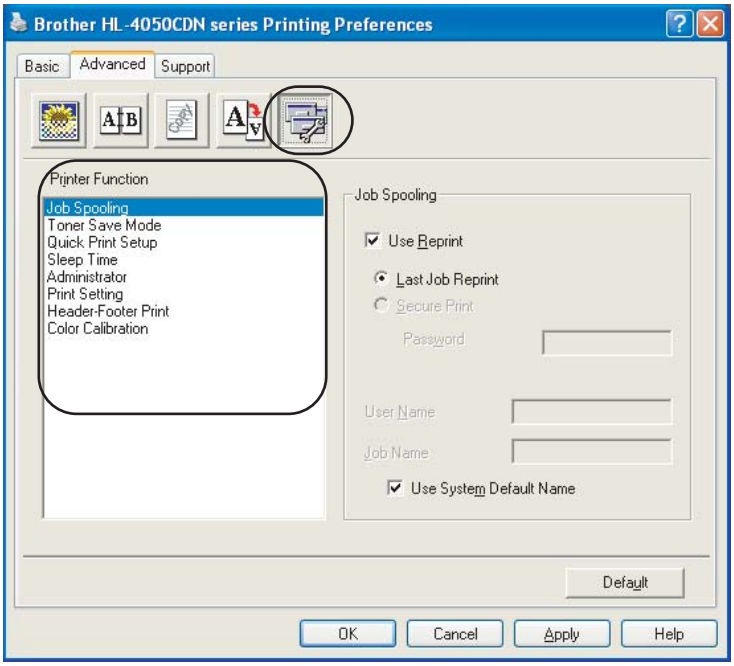

You can set the following in **Printer Function**:

- Job Spooling
- Toner Save Mode
- Quick Print Setup
- Sleep Time
- Administrator
- Print Setting
- Header-Footer Print
- Color Calibration

Job Spooling

The printer keeps the print job sent to it in memory.

You can reprint a document without sending the data again from your computer (except for secure printing):

- Last Job Reprint: Reprints the last job
- Secure Print: Secure documents are documents that are password protected when they are sent to the machine. Only the people who know the password will be able to print them. Since the documents are secured at the machine, you must enter the password using the control panel of the machine to print them.

  If you want to create a secure print job, check the **Use Reprint** box and then check the **Secure Print** box. Enter a password in the **password** box and click **OK**. (For more information about the Reprint function, see *Reprinting documents* on page 73.)

Note

If you want to prevent other people from printing your data using the reprint function, uncheck the **Use Reprint** check box in the job spooling settings.

Toner Save Mode

You can conserve toner using this feature. When you set **Toner Save Mode** to On, print appears lighter. The default setting is **Off**.

Note

We do not recommend **Toner Save Mode** for printing photo or gray scale images.

Quick Print Setup

This feature allows you to quickly choose driver settings by clicking a tasktray icon.

You can turn the quick print setting on or off. By placing a check in the selection boxes for the following functions you can choose which will be available in the quick print setting.

- Multiple Page
- Manual Duplex (HL-4040CN only)
- Duplex (HL-4050CDN only)
- Toner Save Mode
- Paper Source
- Media Type
- Color/Mono

Sleep Time

When the printer does not receive data for a certain period of time, it enters sleep mode. In sleep mode, the printer acts as though it were turned off. When you choose **Printer Default** the timeout setting will be 5 minutes. Intelligent Sleep Mode automatically adjusts to the most suitable timeout setting depending on the frequency of your printer use. While the printer is in sleep mode, all the LEDs are off, but the printer can still receive data. Receiving a print file or document or pressing **Go** will automatically wake up the printer to start printing.

Administrator

Administrators have the authority to limit access to functions such as scaling and watermark.

- Password

  Enter the password into this box.

- Set Password

  Click here to change the password.

- Copies Lock

  Lock the copy pages selection to prevent multiple copy printing.

- Multiple Page & Scaling Lock

  Lock the scaling setting and multiple page setting.

- Color/Mono Lock

  Lock the **Color/Mono** settings as Mono to prevent color printing.

- Watermark Lock

  Lock the current settings of the Watermark option to prevent changes being made.

Print Setting

- Improve pattern printing

  Select this option if printed fills and patterns are different from the patterns and fills you see on your computer.

- Improve Thin Line

  You can improve the image quality of thin lines.

Header-Footer Print

When this feature is enabled, it will print the date and time on your document from your computer's system clock and the PC login user name or the text you entered. By clicking **Setting**, you can customize the information.

- ID Print

  If you select **Login User Name**, your PC login user name will print. If you select **Custom** and enter the text in the **Custom** edit box, the text you entered will print.

Color Calibration

The output density of each color may vary depending on the temperature and humidity of the environment the machine is in. This setting helps you to improve color density by letting the printer driver use the color calibration data stored in your printer.

- Get device data

  If you click this button, the printer driver will attempt to get the color calibration data from your printer.

- Use calibration data

  If the driver successfully gets the calibration data, the driver will automatically check this box. Remove the check mark if you do not want to use the data.

Accessories tab

When you install the optional accessories, you can add and choose their settings in the **Accessories** tab as follows.

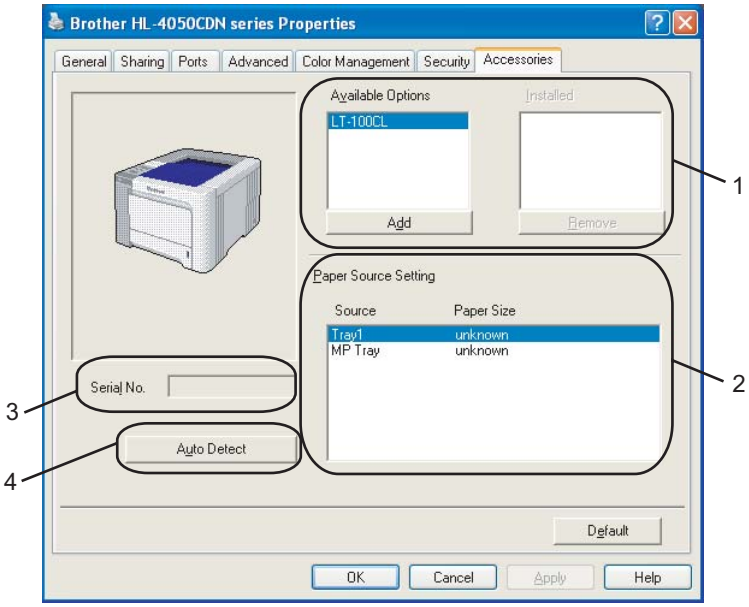

■ **Available Options** (1)

You can manually add and remove the options that are installed on the printer. Tray settings will match the installed options.

■ **Paper Source Setting** (2)

This feature recognizes the paper size set from the control panel menu for each paper tray.

■ **Serial No.** (3)

By clicking **Auto Detect**, the printer driver will probe the printer and display its serial number. If it fails to receive the information, the screen will display "---------".

■ **Auto Detect** (4)

The **Auto Detect** function finds the currently installed optional devices and serial No. and then shows the available settings in the printer driver. When you click **Auto Detect**, options that are installed on the printer will be listed in **Available Options** (1). You can manually add or remove the options by choosing an optional device you want to add or remove, and then clicking **Add** or **Remove**.

Note

The **Auto Detect** function is not available under the following printer conditions:

- The printer power switch is off.
- The printer is in an error state.
- The printer is in a network shared environment.
- The cable is not connected to the printer correctly.

Support tab

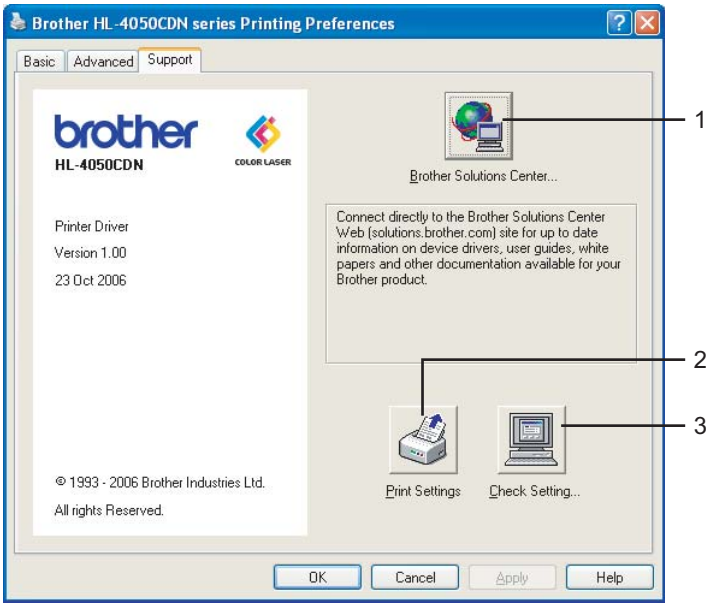

- **Brother Solutions Center** (1)

  The Brother Solutions Center (http://solutions.brother.com) is a web site offering information about your Brother product including FAQs (Frequently Asked Questions), User's Guides, driver updates and tips for using your printer.

- **Printer Settings** (2)

  This will print the pages that show how the internal settings of the printer have been configured.

- **Check Setting...** (3)

  You can check the current driver settings.

Using the custom monochrome printer driver (for Windows®)

You can install a windows® printer driver that will restrict printing to monochrome only.

If you want to install the Windows® printer driver that will restricted color printing, choose **Custom setup** from **Install Printer Driver** selection on the menu screen of the supplied CD-ROM. After accepting the software license and the initial installation screens, follow the steps below when the Select Components screen appears.

1. Choose **PCL Driver** and any other Components you wish to install and click the **Settings** button.

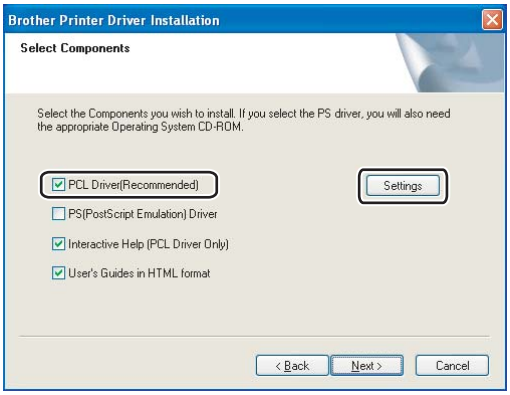

Note

If you are using the HL-4040CN, the PCL driver will automatically be selected.

2. Check the **Enable** box for **Restrict Color Printing** and enter a password in the **Password** box and **Confirm Password** box. Then click **OK**.

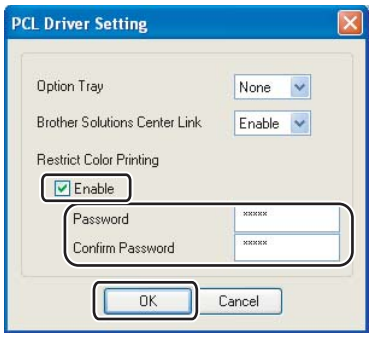

Note

- The password must be between 5 and 25 characters.
- You can unlock the restrict color printing setting by using the **Color/Mono Lock** feature of the printer driver. (See the **Administrator** selection of *Device Options* on page 41.) To unlock the driver for color printing, you will need the password you set at step ❷.

Using the BR-Script3 printer driver (PostScript® 3™ language emulation for Windows®) (HL-4050CDN only)

(For more information, see the **Help** text in the printer driver.)

Note

- To use the BR-Script3 printer driver you must install the driver using the Custom Install from the CD-ROM.
- The screens in this section are from Windows® XP. The screens on your computer may vary depending on your operating system.

Device Settings tab

Choose the options you have installed.

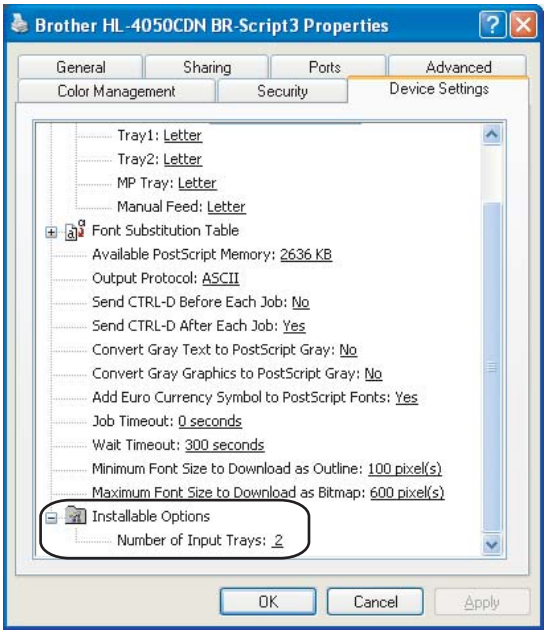

Printing Preferences

Note

If you are using Windows® 2000, XP, Windows Vista™ or Windows Server® 2003, you can access the **Printing Preferences** dialog box by clicking **Printing Preferences...** in the **General** tab of the **Brother HL-4050CDN BR-Script3 Properties** dialog box.

■ Layout tab

You can change the layout setting by choosing the settings for **Orientation**, **Print on Both Sides (Duplex)**, **Page Order** and **Page Per Sheet**.

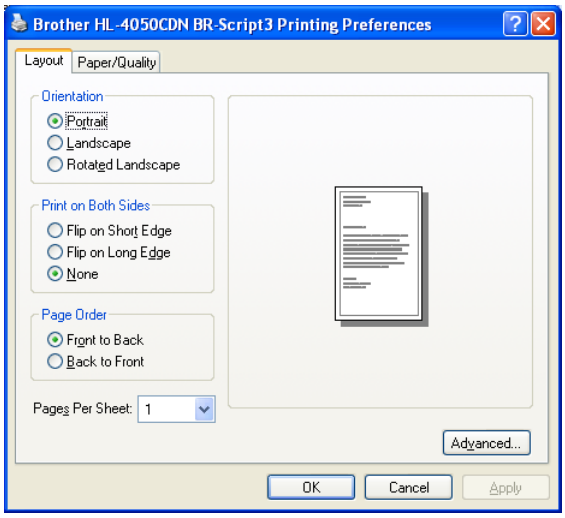

- **Orientation**

  Orientation selects the position of how your document will be printed. (**Portrait**, **Landscape** or **Rotated Landscape**)

- **Print on Both Sides**

  If you want to do duplex printing. choose **Flip on short** or **Flip on Long Edge**.

- **Page Order**

  Specifies the order in which the pages of your document will be printed. **Front to Back** prints the document so that page 1 is on top of the stack. **Back to Front** prints the document so that page 1 is on the bottom of the stack.

■ Paper/Quality tab

Choose the **Paper Source** and **Color**.

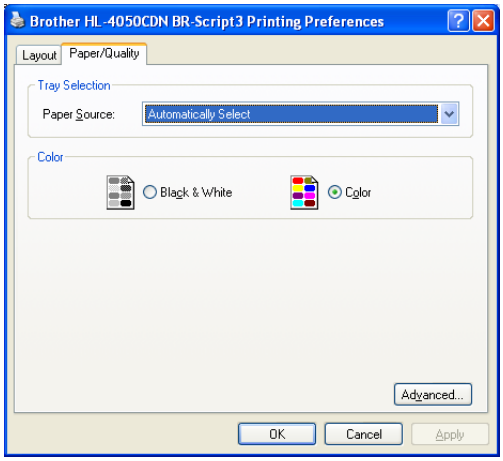

- **Paper Source**

  You can choose **Auto Select**, **Tray1**, **MP tray** or **Manual Feed**.

- **Color**

  Choose how to print color graphics either **Black and White** or **Color**.

Advanced options

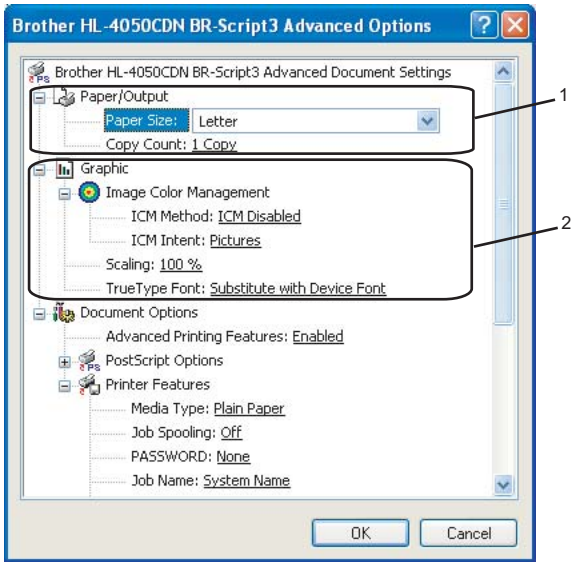

1. Choose the **Paper Size** and **Copy Count** (1).

   - **Paper Size**

     From the drop-down box choose the Paper Size you are using.

   - **Copy Count**

     The copy selection sets the number of copies that will be printed.

2. Set the **Image Color Management**, **Scaling** and **TrueType Font** settings (2).

   - **Image Color Management**

     Specifies how to print your color graphics.

     - If you don't want to enable **Image Color Management**, click **ICM Disabled**.
     - If you want the calculations for color matching to be performed on the host computer before it sends the document to the printer, click **ICM Handled by Host System**.
     - If you want the calculations for color matching to be performed on your printer, click **ICM Handled by Printer using printer calibration**.

   - **Scaling**

     Specifies whether to reduce or enlarge documents, and by what percentage.

   - **TrueType Font**

     Specifies the TrueType font options. Click **Substitute with Device Font** (the default) to use equivalent printer fonts for printing documents that contain TrueType fonts. This will permit faster printing; however, you might lose special characters not supported by the printer font. Click **Download as Softfont** to download TrueType fonts for printing instead of using printer fonts.

3 You can change settings by choosing a setting in the **Printer Features** list (3):

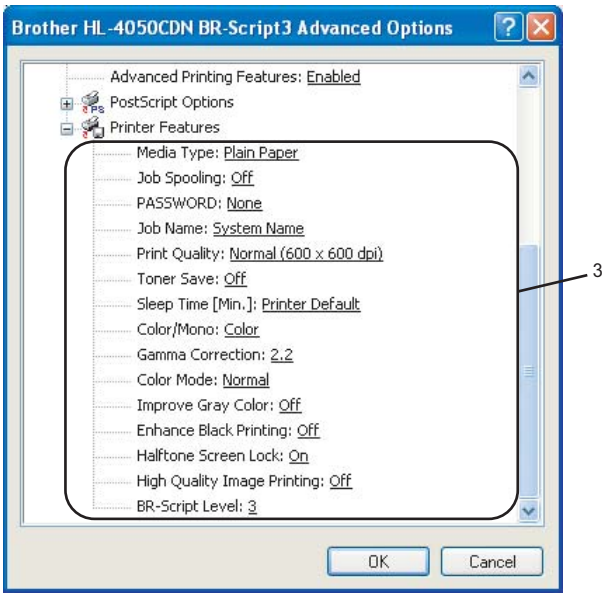

■ **Media Type**

You can use the following types of media in your printer. For the best print quality, select the type of media that you wish to use.

Plain Paper	**Thin Paper**	**Thick Paper**	**Thicker Paper**	**Bond Paper**	**Envelopes**
Env. Thick	**Env. Thin**	**Recycled Paper**	**Postcard**	**Label**	

■ **Job Spooling**

Secure Print allows you to secure documents that are password protected when they are sent to the printer. Only the people who know the password will be able to print them. Since the documents are secured at the printer, you must enter the password using the control panel of the printer. The secured document must have a **Password** and **Job Name**.

(For more information about the Reprint function, see *Reprinting documents* on page 73.)

■ **Password**

Choose the password for your secured document that you send to the machine from the drop-down box.

■ **Job Name**

Choose the Job name from the drop-down list for your secured document.

Print Quality

You can choose the following print quality settings.

- Normal

  600 dpi class. Recommended for ordinary printing. Good print quality with good print speeds.

- Fine

  2400 dpi class. The finest print mode. Use this mode to print precise images such as photographs. Since the print data is much larger than in normal mode, processing time, data transfer time and printing time will be longer.

Toner Save

You can conserve toner using this feature. When you set **Toner Save Mode** to **On**, print appears lighter. The default setting is **Off**.

Note

We do not recommend **Toner Save** for printing Photo or Gray Scale images.

Color/Mono

You can choose the following color mode:

- Color

  The device will print all pages in full color mode.

- Mono

  Selecting Mono mode prints your documents in grayscale.

Note

If the Cyan, Magenta or Yellow toner runs out, choosing **Mono** will allow you to keep printing as long as the Black toner does not run out.

Gamma Correction

You can adjust the brightness of your printed document compared to the image on the screen.

Color Mode

The following options are available in Color Matching mode:

- Normal

  This is the Default color mode.

- Vivid

  The color of all elements are adjusted to become a more vivid color.

Improve Gray Color

You can improve the image of a shaded area.

Enhance Black Printing

If a black graphic cannot print correctly, choose this setting.

■ **Halftone Screen Lock**

Stops other applications from modifying the Halftone settings. The default setting is **On**.

■ **High Quality Image Printing**

You can get high quality image printing. If you set **High Quality Image Printing** to **On**, the printing speed will be slower.

■ **BR-Script Level**

You can change the BR-script emulation language level. Choose a level from the drop-down list.

Ports tab

Choose the port where your printer is connected or the path to the network printer you are using.

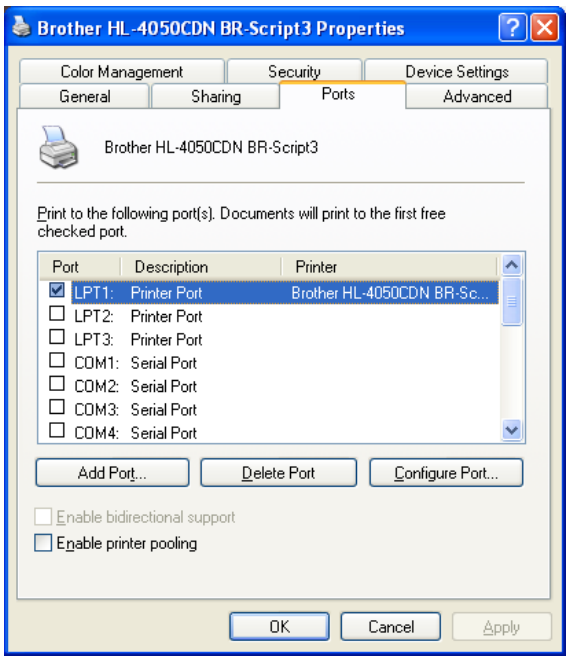

Features in the printer driver (for Macintosh®)

This printer supports Mac OS® X 10.2.4 or greater.

Note

The screens in this section are from Mac OS® X 10.4. The screens on your Macintosh® will vary depending on your operating system.

Page Setup

You can set the **Paper Size**, **Orientation** and **Scale**.

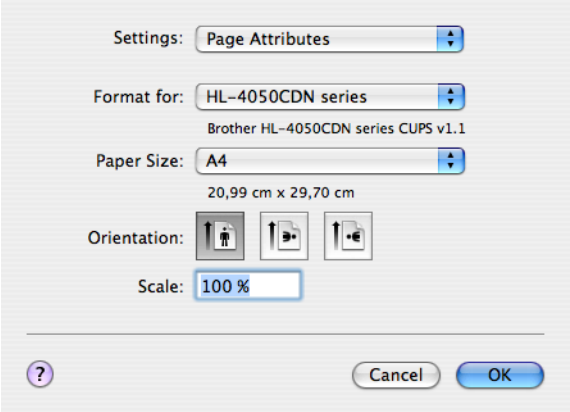

Copies & Pages

You can set the **Copies** and **Pages**.

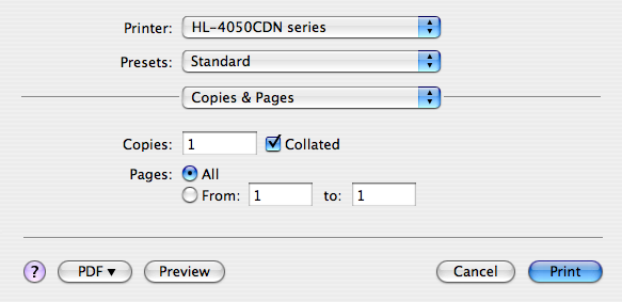

Cover Page (for Mac OS® X 10.4)

You can make the following cover page settings:

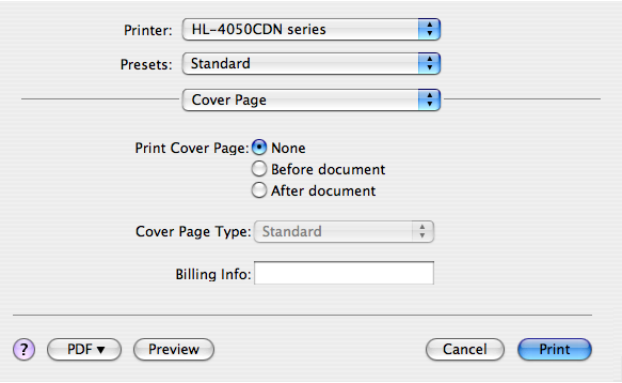

- **Print Cover Page**

  If you want to add a cover page to your document, use this function.

- **Cover Page Type**

  Choose a template for the cover page.

- **Billing Info**

  If you want to add the billing information to the cover page, enter text in the **Billing Info** box.

Layout

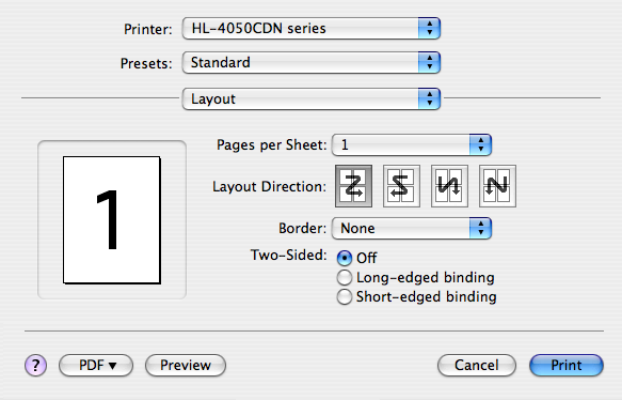

- **Pages per Sheet**

  Choose how many pages will appear on each side of the paper.

- **Layout Direction**

  When you specify the pages per sheet, you can also specify the direction of the layout.

- **Border**

  If you want to add a border, use this function.

Job Spooling

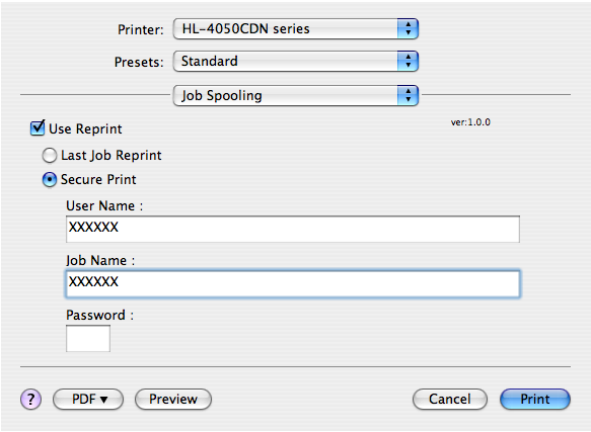

The printer keeps the last print job sent to it in memory.

You can reprint a document without sending the data again from your computer (except for secure printing).

- **Last Job Reprint**: Reprint the last job
- **Secure Print**: Secure documents are documents that are password protected when they are sent to the printer. Only the people who know the password will be able to print them. Since the documents are secured at the printer, you must enter the password using the control panel of the machine to print them.

  If you want to create a secure print job, check the **Use Reprint** box and then choose the **Secure Print**. Enter a user name, job name and password, then click **Print**. (For more information about the Reprint function, see *Reprinting documents* on page 73.)

Note

If you want to prevent other people from printing your data using the reprint function, uncheck the **Use Reprint** check box in the job spooling settings.

Duplex Printing

- **Use duplex unit (HL-4050CDN only)**
  - For Mac OS® X 10.3 or greater

    Select **Layout**.

    Choose **Long-edged binding** or **Short-edged binding** in **Two-Sided**.

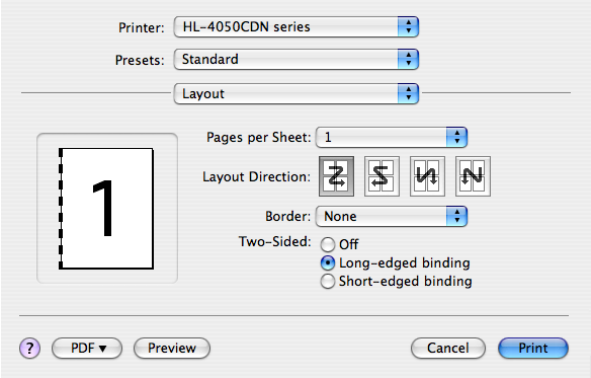

- For Mac OS® X 10.2

  Select **Duplex**.

  Check the **Duplex** check box. Choose **Use Duplex Unit** and then Choose **Flip on Long Edge** or **Flip on Short Edge**.

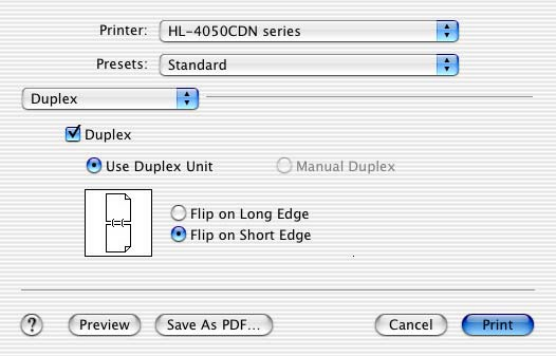

■ Manual duplex (for Mac OS® X 10.3 or greater)

Select **Paper Handling**.

Choose **Odd numbered pages** and print, and then choose **Even numbered pages** and print.

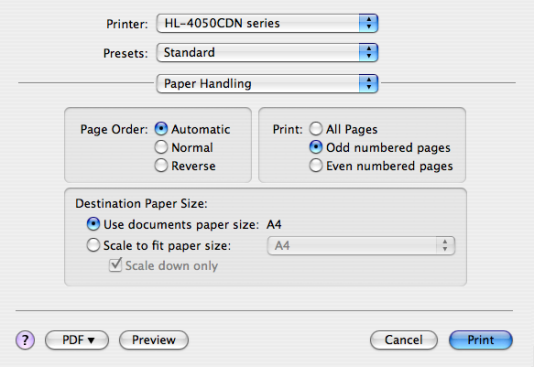

Print Settings

You can change settings by choosing a setting in the **Print Settings** list:

Basic tab

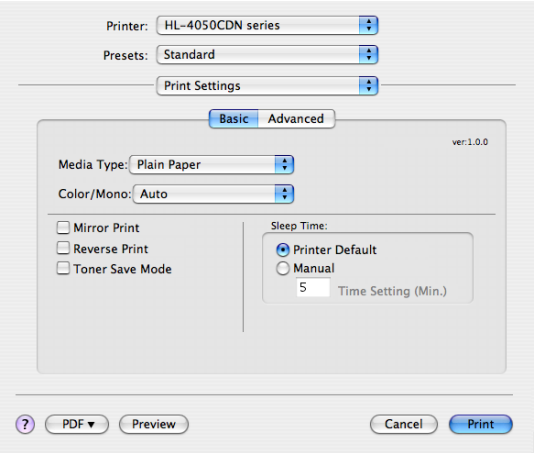

■ Media Type

You can change the media type to one of the following:

- Plain Paper
- Thin Paper
- Thick Paper
- Thicker Paper
- Bond Paper
- Recycled Paper
- Envelopes
- Env. Thick
- Env. Thin
- Postcard
- Label

Color/Mono

You can change the Color/Mono settings as follows:

- Color

  When your document contains color and you want to print it in color, select this mode.

- Mono

  Select this mode if your document has only black and grayscale text and/or objects. Mono mode makes the print processing speed faster than color mode. If your document contains color, selecting Mono mode prints your document in 256 levels of gray.

- Auto

  The printer checks the content of your documents for color. If color is detected, it prints in color. If no color content is detected, it prints in monochrome. The total printing speed may become slower.

Note

If the Cyan, Magenta or Yellow toner runs out, choosing **Mono** will allow you to keep printing as long as the Black toner does not run out.

Mirror Print

Check **Mirror Print** to reverse the data from left to right.

Reverse Print

Check **Reverse Print** to reverse the data from up to down.

Toner Save Mode

You can conserve toner using this feature. When you set **Toner Save Mode** to On, print appears lighter. The default setting is **Off**.

Note

We do not recommend Toner Save for printing Photo or Gray Scale images.

Sleep Time

When the printer does not receive data for a certain period of time, it enters sleep mode. In sleep mode, the printer acts as though it were turned off. The default setting for timeout is 5 minutes. If you want to change the sleep time, choose **Manual** and then enter the time in the text box on the driver.

While the printer is in sleep mode, the LCD light is off, but the printer can still receive data. Receiving a print file or document or pressing **one of the buttons** will automatically wake up the printer to start printing

Advanced tab

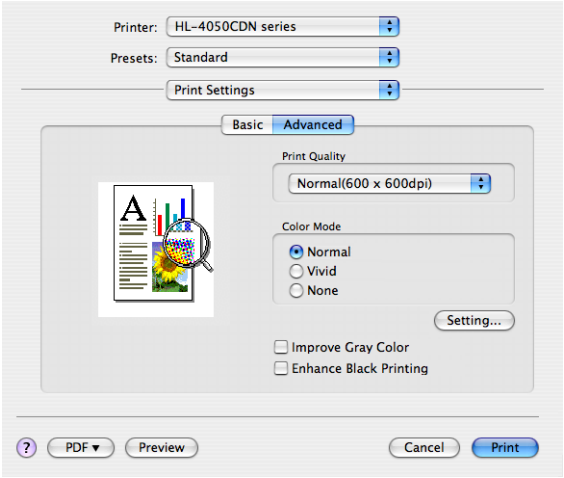

■ Print Quality

You can change the print quality as follows:

- Normal

  600 x 600 dpi. Recommended mode for ordinary printouts. Good print quality with reasonable printing speed.

- Fine

  2400 dpi class. The finest print mode. Use this mode to print precise images such as photographs. Since the print data is much larger than in normal mode, processing time / data transfer time and printing time will be longer.

■ Color Mode

You can change the color mode as follows:

- Normal

  This is the Default color mode.

- Vivid

  The color of all elements are adjusted to become a more vivid color.

■ **Improve Gray Color**

You can improve the image quality of shaded areas by ticking the **Improve Gray Color** check box.

■ **Enhance Black Printing**

If a black graphic cannot be printed correctly, choose this setting.

Using the BR-Script3 printer driver (Post Script® 3™ language emulation for Macintosh®) (HL-4050CDN only)

Note

- To use the BR-Script3 printer driver on a Network, see *the Network User's Guide on the CD-ROM*.
- To use the BR-Script3 printer driver, you need to set the `Emulation` to `BR-Script3` by using the control panel before connecting the interface cable. (See *Menu table* on page 77.)

Installing the BR-Script3 printer driver

You need to install the BR-Script3 printer driver using the following instructions.

Note

If you use a USB cable, only one printer driver per printer can be registered in the Printer Setup Utility (Print Center for Mac OS® X 10.2 users). Before installing the BR-Script3 printer driver, delete from the Printer list any other Brother drivers that are for the same printer.

1. From the **Go** menu Choose **Applications**.

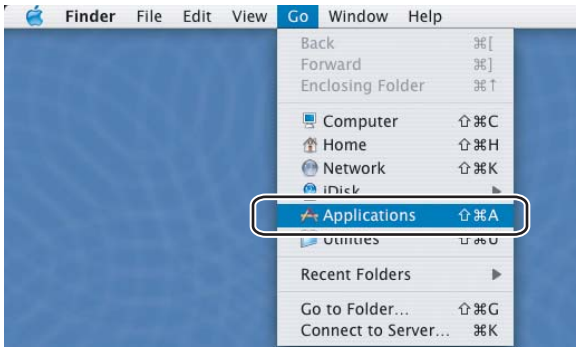

2. Open the **Utilities** folder.

3 Open the **Printer Setup Utility** icon. For Mac OS® X 10.2 x users, open the **Print Center** icon.

4 Click **Add**.

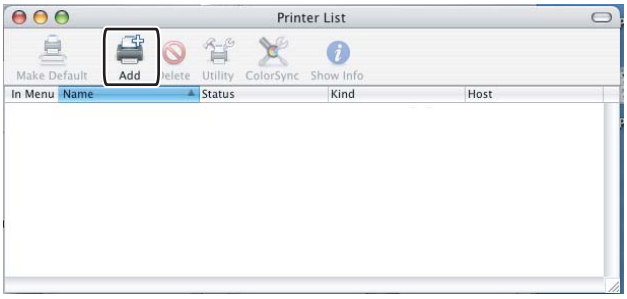

For Mac OS® X 10.2.4 to 10.3 users, go to ❺.
For Mac OS® X 10.4 or greater users, go to ❻.

5 Choose **USB**.

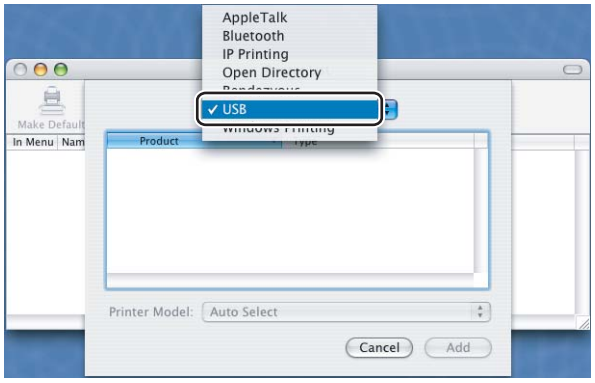

6 Choose the model name and make sure that **Brother** in **Printer Model** (Print Using) and the model name which shows BR-Script in Model Name (Model) are selected, and then click **Add**.

For Mac OS® X 10.2.4 to 10.3 users:

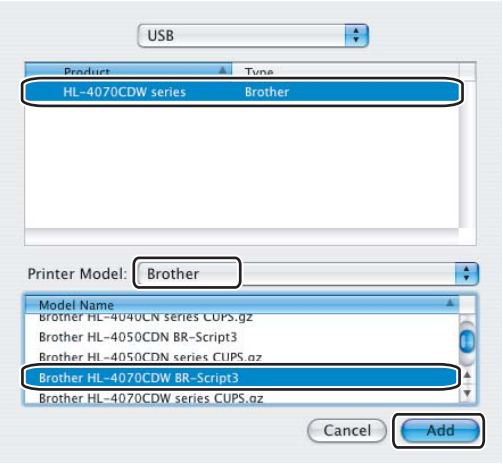

For Mac OS® X 10.4 or greater users:

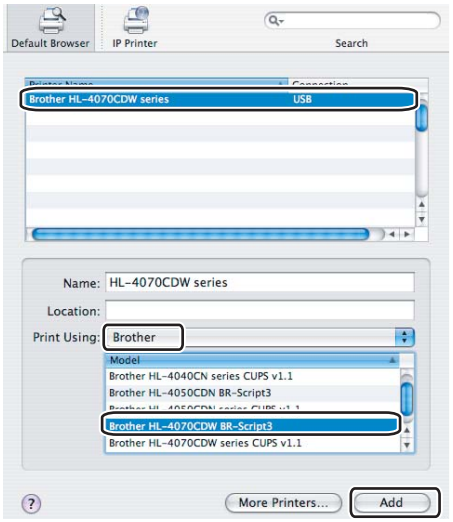

7 From the **Printer Setup Utility** menu, choose **Quit Printer Setup Utility**.

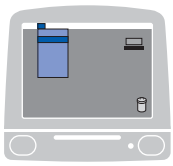

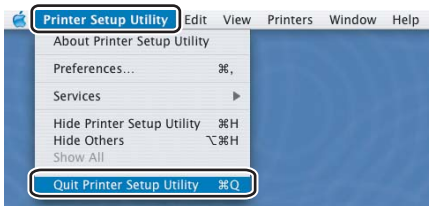

Uninstalling the printer driver

You can uninstall the printer driver that you have installed with the following steps.

Note

- This is not available if you installed the printer driver from the Windows Add a printer function.
- After uninstalling, we recommend that you restart your computer to remove files that were in use during the uninstall.

Printer driver for Windows® and Windows Vista™ and Windows Server® 2003

For Windows® XP/XP Professional x64 Edition and Windows Vista™ and Windows Server® 2003/Server® 2003 x64 Edition

1. Click the **Start** button, point to **All Programs** and then to your printer name.
2. Click **UnInstall**.
3. Follow the instructions on the screen.

For Windows® 2000

1. Click the **Start** button, point to **Programs** and then to your printer name.
2. Click **UnInstall**.
3. Follow the instructions on the screen.

Printer driver for Macintosh®

For Mac OS® X 10.2

1. Disconnect the USB cable between the Macintosh® and your printer.
2. Restart the Macintosh®.
3. Log on as an ‘Administrator’.
4. Run the **Printer Center** (from the **Go** menu, choose **Applications**, **Utilities**), then choose the printer you want to remove and remove it by clicking the **Delete** button.
5. Drag the **CLaser06** folder (from the **Macintosh HD** (Startup Disk), choose **Library**, **Printers**, **Brother**) into the Trash and then empty the Trash.
6. Restart the Macintosh®.

For Mac OS® X 10.3 or greater

1. Disconnect the USB cable between the Macintosh® and your printer.
2. Restart the Macintosh®.
3. Log on as an ‘Administrator’.
4. Run the **Printer Setup Utility** (from the **Go** menu, choose **Applications**, **Utilities**), then choose the printer you want to remove and remove it by clicking the **Delete** button.
5. Restart the Macintosh®.

Software

Software for networks

BRAdmin Light

BRAdmin Light is a utility for initial setup of Brother network connected devices. This utility can search for Brother products on your network, view the status and configure basic network settings, such as IP address. The BRAdmin Light utility is available for Windows® 2000/XP and Windows Vista™ and Windows Server® 2003, Mac OS® X 10.2.4 or greater computers. For installing BRAdmin Light, please see the Quick Setup Guide we provided with the printer. For Macintosh® users, BRAdmin Light will be installed automatically when you install the printer driver. If you have already installed the printer driver, you do not have to install it again.

For more information on BRAdmin Light, visit us at http://solutions.brother.com.

BRAdmin Professional (for Windows®)

BRAdmin Professional is a utility for more advanced management of network connected Brother devices. This utility can search for Brother products on your network, view the status and configure the network settings from a computer running the Windows® system. BRAdmin Professional has additional features from BRAdmin Light.

For more information and downloading, visit us at http://solutions.brother.com.

Driver Deployment Wizard (for Windows®)

This installer includes the Windows® printer driver and Brother network port driver (LPR). If the administrator installs the printer driver and port driver using this application, the administrator can save the file to the file server or send the file by E-mail to users. Then, each user just clicks that file to have the printer driver, port driver, IP address, and so on, automatically copied to their computer.

Web BRAdmin (for Windows®)

Web BRAdmin is a utility for managing network connected Brother devices. This utility can search for Brother products on your network, view the status and configure the network settings. Unlike BRAdmin Professional, which is designed for Windows® only, the Web BRAdmin server utility can be accessed from any client PC with a Web Based Management (Web browser) that supports JRE (Java Runtime Environment). By installing the Web BRAdmin server utility on a PC running IIS 1, administrators with a Web Based Management (Web browser) can connect to the Web BRAdmin server, which then communicates with the device itself.

For more information and downloading, visit us at http://solutions.brother.com.

[1] Internet Information Server 4.0 or Internet Information Service 5.0 / 5.1 / 6.0 / 7.0

About emulation modes

This printer has the following emulation modes. You can change the setting by using the control panel or Web Based Management (Web browser).

- HP LaserJet Mode

  The HP LaserJet mode (or HP mode) is the emulation mode in which this printer supports the PCL5C and PCL6 language of the Hewlett-Packard® LaserJet laser printer. Many applications support this type of laser printer. Using this mode will allow your printer to run at its best with those applications.

- BR-Script 3 Mode (HL-4050CDN only)

  BR-Script is an original Brother page description language and a PostScript® language emulation interpreter. This printer supports level 3. The BR-Script interpreter of this printer allows you to control text and graphics on pages.

  For technical information about PostScript® commands, see the following manuals:

  - Adobe Systems Incorporated. PostScript® Language Reference, 3rd edition. Addison-Wesley Professional, 1999. ISBN: 0-201-37922-8
  - Adobe Systems Incorporated. PostScript® Language Program Design. Addison-Wesley Professional, 1988. ISBN: 0-201-14396-8
  - Adobe Systems Incorporated. PostScript® Language Tutorial and Cookbook. Addison-Wesley Professional, 1985. ISBN: 0-201-10179-3

Automatic emulation selection (HL-4050CDN only)

This printer has an automatic emulation selection feature that is turned on by default. This lets it automatically change the emulation mode to suit the type of data it receives.

You can change the setting by using the control panel or Web Based Management (Web browser).

Automatic interface selection

This printer has an automatic interface selection feature that is turned on by default. This lets it automatically change the interface to IEEE 1284 parallel (HL-4050CDN only), USB, or Ethernet depending on which interface is receiving data.

Since the default setting is on for the automatic interface selection mode, simply connect the interface cable to the printer. Always turn off both your computer and printer when connecting or disconnecting the cable.

Auto Interface selection can take a few seconds to work. If you only use one interface it would be advisable to select that interface; use the control panel to access the `General Setup` menu, choose `Interface` and then choose `Select`. If only one interface is chosen, the printer will allocate the entire input buffer to that interface.

4 Control Panel

Control panel

This printer has one back lit liquid crystal display (LCD), eight buttons and two Light Emitting Diodes (LEDs) on the control panel. The display can show various messages with up to 16 characters in each of the two rows.

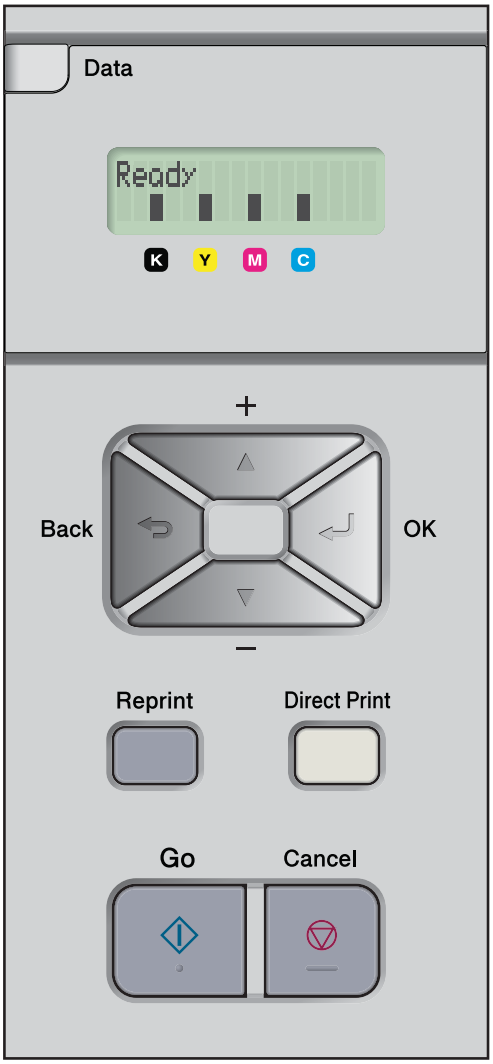

Buttons

You can control the basic printer operations and change various printer settings with eight buttons (**Go**, **Cancel**, **Reprint**, **+**, **-**, **Back**, **OK**, **Direct Print**).

button	Operations
Go	Clear error messages. Pause and continue printing.
Cancel	Stop and cancel the printing job in progress. Exit from the control panel menu, Reprint menu or Direct Print menu.
Reprint	Choose the Reprint menu.
+	Scroll backward through menus and the available options. Enter numbers and increase the number.
-	Scroll forward through menus and the available options. Enter numbers and decrease the number.
Back	Go back one level in the menu structure.
OK	Choose the control panel menu. Set the chosen menus and settings.
Direct Print	Switch to Direct Print mode when USB flash memory is inserted into the USB direct interface.

Go

You can pause printing by pressing **Go**. Pressing **Go** again restarts the print job. During a pause, the printer is offline.

Pressing **Go** allows you to choose the displayed option in the last menu level. After changing a setting, the printer returns to the Ready state.

If Data remains in the printer memory pressing **Go** will print that remaining data.

You can clear some error indications by pressing **Go**. Follow the control panel instructions or see *Troubleshooting* on page 140 to clear all other errors.

Note

- The options you have chosen are shown with an asterisk at the end of the display. Since the asterisk shows what you have chosen, you can easily see the current settings as you look through the LCD.
- If the printer is in Pause mode and you do not want to print the data left, press **Cancel**. Once the job has been canceled, the printer will return to the Ready state.

Cancel

You can cancel the processing or printing of data by pressing **Cancel**. The LCD shows `Cancel printing.` until the job is canceled. After canceling the job, the printer returns to the Ready state. Pressing **Cancel** will exit the control panel menu and return the printer to the Ready state.

Reprint

If you want to reprint a document that has just been printed, press **Reprint**.

You can reprint when the printer is in the Ready state.

(For details, see *Reprinting documents* on page 73.)

+ or - button

Moving through menus on the LCD

Pressing the **+** or **-** button when the printer is in the Ready state, takes it offline and the LCD will show the control panel menu.

Press to scroll through the menus and options. Press the button until you see the setting you want.

Entering numbers

You can enter numbers in two ways. You can press the **+** or **-** button to move up or down one number at a time, or you can hold down the **+** or **-** button to move faster. When you see the number you want, press **OK**.

Back

Pressing **Back** when the printer is in the Ready state takes it offline, and the LCD will show the control panel menu.

Pressing **Back** allows you to return to the previous level from the current menu level.

Back also allows you to choose the previous digit while setting numbers.

When you choose a setting and it does not have an asterisk (**OK** was not pressed), **Back** allows you to return to the previous menu level with the original setting unchanged.

OK

Pressing **OK** when the printer is in the Ready state takes it offline, and the LCD will show the control panel menu.

Pressing **OK** allows you to choose the displayed menu or option. After changing a setting, the LCD shows `Accepted` and then the printer returns to the previous menu level.

Note

The options you have chosen are shown with an asterisk at the end of the display. Since the asterisk shows what you have chosen, you can easily see the current settings as you look through the LCD.

LEDs

The LEDs are lights which show the printer status.

Data LED (Yellow)

LED indication	Meaning
On	Data is in the printer memory.
Blinking	Receiving or processing data.
Off	No remaining data in the memory.

Direct Print LED (Blue)

LED indication	Meaning
On	USB flash memory or PictBridge digital camera is inserted into the USB direct interface.
Off	USB flash memory or PictBridge digital camerais not inserted into the USB direct interface.

LCD

The LCD shows the current printer status. When you use the control panel keys, the LCD will change.

If there are any problems, the LCD will show the error message, maintenance message or call service message so you will know that you need to take action. (For more information about these messages, see *LCD messages* on page 141.)

Back light

Light	Meaning
Off	The printer is off or in sleep status.
Green (General)	Ready to print Printing Warming up
Red (Error)	There is a problem with the printer.
Orange (Setting)	Choosing a menu (Control panel menu, Reprint menu or Direct Print menu) Pause

LCD messages

The message on the LCD shows the current printer status during normal operation.

```
Ready
■ ■ □ ■
```

The four ■ marks (also □, □=blinking ■) indicate the Black (K), Yellow (Y), Magenta (M), Cyan (C) toner cartridges from left to right.

The ■ marks indicate the status of the toner in the toner cartridges. When the ■ mark blinks (□), the indicated toner is nearly empty. When toner becomes empty, the ■ indicator disappears completely.

When an error has occurred, the type of error is displayed on the first line of the LCD message as shown below.

The message on the second line shows information for clearing the error.

```
Cover is open
Close the Front Cover
```

Printer status messages

The following table shows the printer status messages during normal operation:

Printer Status Message	Meaning
Cooling Down	The printer is cooling down.
Job Cancel	Canceling the job.
Ignore Data	Printer is ignoring data processed using the PS driver.
Pause	The printer has suspended its operations. Press **Go** to start the printer again.
Please Wait	The printer is warming up. The printer is carrying out the calibration process.
Printing	Printing.
Ready	Ready to print.
Sleep	In Sleep state.

Reprinting documents

Reprinting the last job

You can reprint the data from the last print job without sending it from the computer again.

Note

- If the `Reprint` setting is set to `Off` on the control panel and you press **Reprint**, the LCD shows `No Data Stored` for a short time.
- If you want to cancel reprinting, press **Cancel**.
- If the printer does not have enough memory to spool the print job data, it will not print the document.
- Pressing the **-** or **+** button makes the number of reprint copies decrease or increase. You can choose between 1 and 999 `Copies`.
- For more information about the settings in the printer driver, see *Device Options* on page 41.
- After turning the power switch off, the last job data will be deleted.

How to reprint the last job

1. Make sure that the `Reprint` setting is `On` by using the buttons on the control panel to enter the `General Setup` menu.

Note

If you print with the printer driver we have supplied with the printer, the settings for `Job Spooling` in the printer driver will take priority over the settings made on the control panel. (For more information, see *Device Options* on page 41.)

2. Press **Reprint**.
3. Press **OK**.

```
Reprint Menu
Last Job
```

4. Press the **+** or **-** button to choose `Print`. Press **OK**.

```
Last Job
Print
```

5. Press the **+** button twice to enter the number of copies you want.

```
Last Job
Copies =3
```

6. Press **OK** or **Go**.

```
Printing
```

↓

```
Last Job
Print
```

Note

- Pressing the **+** or **-** key makes the number of reprint copies increase or decrease. You can choose between 1 and 999 `Copies`.
- If you wait 30 seconds to continue the control panel operation, the LCD leaves the `Reprint` setting automatically.

Printing Secure data

Secure data

Secure documents are protected by a password and only those people who know the password will be able to print the document. The printer will not print the document when you send it for printing. To print the document, you must use the control panel of the printer (with the password). Secure data will be deleted after printing once.

When the area to spool data is full, the earliest data is automatically deleted first. The order of deleting data is not connected to the order of reprinting.

If you want to delete the spooled data, you can carry out this operation using the control panel or the web-based management application.

Note

- The secure data will be deleted when the printer is turned off.
- For more information about the settings in the printer driver and how to create secure data, see *Device Options* on page 41 (For Windows® printer driver), *Advanced options* on page 50 (For Windows® BR-Script printer driver) or *Job Spooling* on page 56 (For Macintosh® printer driver).

How to print Secure data

1. Press **Reprint**.
2. Press the **+** or **-** button to choose `Secure Print`. Press **OK**.

```
Reprint Menu
Secure Print
```

3. Press the **+** or **-** button to choose the user name. Press **OK**.

```
User
XXXXXX
```

4. Press the **+** or **-** button to choose the job. Press **OK**.

```
Job
XXXXXX.doc
```

5. Press the **+** or **-** button to enter your password. Press **OK**.

```
XXXXXX.doc
Password:     XXXX
```

Note

If you wait 30 seconds to continue the control panel operation, the LCD leaves the `Reprint` setting automatically.

6 Press the **+** or **-** button to choose `Print`. Press **OK**.

```
XXXXXX.doc
Print
```

7 Press the **+** or **-** button to enter the number of copies you want. Press **OK** or **Go**.

```
XXXXXX.doc
Copies =1
```

↓

```
Printing
```

When there is no last job data or secure data in memory

If the printer does not have reprint data in the memory and you press **Reprint**, the LCD will show `No Data` Stored.

Deleting the last job

Choose `Delete` in step ❹ on *How to reprint the last job* on page 73.

Deleting secure data

Choose the user name and the job you want to delete in steps ❶ to ❺, and then choose `Delete` in step ❻ on *How to print Secure data* on page 74-75.

Canceling the reprint job (reprinting and printing secure data)

If you want to cancel the current reprint job, press **Cancel**. **Cancel** also allows you to cancel a paused reprint job.

Using the control panel LCD menu

When you use the Menu keys (**+**, **-**, **OK** or **Back**), remember the following basic steps:

- If no control panel operations are performed for 30 seconds, the LCD automatically returns to `Ready`.
- When you press **OK** to choose a setting, `Accepted` appears on the second line of the LCD. After that, the LCD returns to the previous menu level.
- When you press **Go** to choose a setting, `Accepted` appears on the second line of the LCD. After that, the LCD returns to the Ready state.
- After changing the status or a setting, pressing **Back** before you press **OK** will cause the LCD to return to the previous menu level with the original settings unchanged.
- There are two ways to input numbers. You can press the **+** or **-** key to scroll up or down one number at a time, or you can hold down the **+** or **-** key to scroll faster. The blinking number is the one that you can change.

For example: If you only use Tray 1 to print from, change the Tray Use setting to Tray 1 Only, as follows.

1. Press any of the **Menu** buttons (**+**, **-**, **OK** or **Back**) to take the printer offline.

```
Ready
```

↓

```
Select ▲▼ or OK
Machine Info.
```

2. Press the **+** or **-** button to choose `Paper Tray`.

```
Select ▲▼ or OK
Paper Tray
```

3. Press **OK** to move to the next menu level.

```
Paper Tray
Tray Use
```

4. Press the **+** or **-** button to choose `Tray1 Only`.

```
Tray Use
Tray1 Only
```

5. Press **OK** or **Go**.
   `Accepted` appears on the second line of the LCD.

```
Tray Use
Accepted
```

Menu table

There are nine menus. For more information about the selections available in each menu, see the tables below.

Note

The control panel LCD names for the paper trays are as follows.

- Standard paper tray: `Tray1`
- Multi-purpose tray: `MP`
- Optional lower tray: `Tray2`

Machine Info.

Submenu	Menu Selections	Descriptions
Print Settings		Prints the Printer Settings page.
Test Print		Prints the test page.
Demo Print		Prints the demonstration sheet.
Print Font		Prints the font list and samples.
Serial No.		Shows the printer serial number.
Version	Main Version	Shows the main firmware version.
	Sub Version	Shows the sub firmware version.
	Engine Version	Shows the engine firmware version.
	RAM Size	Shows the size of memory in this printer.
Page Count	Total	Shows the current total printed pages.
	Color	Shows the current total color printed pages.
	Monochrome	Shows the current total monochrome printed pages.
Image Count	Black(K)	Shows the amount of images produced by the black color.
	Cyan(C)	Shows the amount of images produced by the cyan color.
	Magenta(M)	Shows the amount of images produced by the magenta color.
	Yellow(Y)	Shows the amount of images produced by the yellow color.
Drum Count		Shows the current total pages printed for drum unit.

Machine Info. (continued)

Submenu	Menu Selections	Descriptions
Parts Life	Drum Life	Shows the remaining life for the drum unit.
	Belt Life	Shows the remaining life for the belt unit.
	PF KitMP Life	Shows the pages left to print with the PF kit MP.
	PF Kit1 Life	Shows the pages left to print with the PF kit 1.
	PF Kit2 Life (HL-4050CDN only)	Shows the pages left to print with the PF kit 2.
	Fuser Life	Shows the pages left to print with the fuser unit.
	Laser Life	Shows the pages left to print with the laser unit.
Reset Parts Life (Appears only when replacement parts have been changed)	Drum Unit	Resets the drum unit life. Appears when you replace the drum unit.
	Belt Unit	Resets the belt unit life. Appears when you replace the belt unit.
	PF KitMP	Resets the PF kitMP parts life. Appears when you replace the PF KitMP.
	PF Kit1	Resets the PF kit1 parts life. Appears when you replace the PF Kit1.
	PF Kit2 (HL-4050CDN only)	Resets the PF kit2 parts life. Appears when you replace the PF Kit2.

Paper Tray

Submenu	Options	Descriptions
Tray Use	<HL-4040CN only> **Auto***/MP Only/Tray1 Only	Chooses the tray that will be used.
	<HL-4050CDN only> (For no Tray2 installed) **Auto***/MP Only/Tray1 Only (For Tray2 installed) **Auto***/MP Only/Tray1 Only/ Tray2 Only	
Manual Feed	**Off***/On	Chooses whether to feed paper manually.
Priority	<HL-4040CN only> **MP>T1***/T1>MP	When Tray Use is chosen as Auto: Chooses the order in which the printer uses the paper trays that contain paper of the same size.
	<HL-4050CDN only> (For no Tray2 installed) **MP>T1***/T1>MP (For Tray2 installed) **MP>T1>T2***/MP>T2>T1>/T1>T2>MP/T2>T1>MP/T1>T2/T2>T1/T1>MP>T2/T2>MP>T1	

The default settings are shown in Bold with an asterisk.

Paper Tray (continued)

Submenu	Options	Descriptions
MP First	**Off***/On	Chooses whether to feed paper from the MP tray as a priority.
Duplex (HL-4050CDN only)	**Off***/On(Long Bind)/ On(Short Bind)	Chooses whether to automatically print on both sides of the paper.
MP Size	**Any***/Letter/Legal/A4...	Choose the size of paper you put in the MP tray.
Tray1 Size	**Any***/Letter/Legal/A4...	Choose the size of paper you loaded in the standard paper tray.
Tray2 Size (HL-4050CDN only)	**Any***/Letter/Legal/A4...	Choose the size of paper you loaded in the optional lower tray.
The default settings are shown in Bold with an asterisk.		

General Setup

Submenu	Menu Selections	Options	Descriptions
Local Language		**English***/Français...	Changes the LCD language for your country.
Ecology	Sleep Time	0/1/2/3/4/**5***.../ 240 Min	Sets the time to return to Power Save mode.
	Toner Save	On/**Off***	Increases the page yield of the toner cartridge.
Panel Control	Button Repeat	**0.1***/0.4/0.6/0.8/1.0/1.4 /1.8/2.0 Sec	Sets the time for the LCD message to change when holding the **+** or **-** button at intervals.
	Message Scroll	**Level 1***/Level 2.../Level 10	Sets the time in seconds that an LCD message will scroll across the LCD. From Level 1=0.2 sec to Level 10=2.0 sec.
	LCD Contrast	-□□■□□+	Adjusts the contrast of the LCD.
	Auto Online	**On***/Off	Return to Ready state automatically.
Setting Lock		**Off***/On	Turns the lock panel settings On or Off using the password.
Reprint		**On***/Off	Turns the reprint settings On or Off.
The default settings are shown in Bold with an asterisk.			

General Setup (continued)

Submenu	Menu Selections	Options	Descriptions
Interface	Select	<HL-4040CN only> **Auto***/USB/Network	Choose the interface you use.
		<HL-4050CDN only> **Auto***/Parallel/USB/Network	
	Auto IF Time	1/2/3/4/**5***.../99 (sec)	You need to set the time-out period for the auto interface selection.
	Input Buffer	Level 1/2/3/**4***.../7	Increases or decreases the input buffer capacity.
	Inputprime (HL-4050CDN only)	**Off***/On	Turns the inputprime of parallel On or Off.
The default settings are shown in Bold with an asterisk.			

Print Menu

Submenu	Menu Selections	Options	Descriptions
Emulation (HL-4050CDN only)		**Auto***/HP LaserJet/BR-Script	Choose the emulation mode you use.
Auto Continue		**Off***/On	Choose whether to automatically clear the removable error.
Output Color		**Auto***/Color/Mono	Set the output color.
Media Type		**Plain Paper***/Thick Paper/Thicker Paper/Thin Paper/Recycled Paper/Bond Paper/Envelopes/Env.Thin/Env.Thick/PostCard/Label	Sets the type of paper.
Paper		Letter/Legal/**A4***/Executive/Com-10/DL/JIS B5/B5/A5/B6/A6/Monarch/C5/A4Long/Folio/DL L/PostCard	Sets the size of paper.
Copies		**1***/2.../999	Sets the number of printed pages.
Orientation		**Portrait***/Landscape	This printer can print pages in portrait or landscape orientation.
The default settings are shown in Bold with an asterisk.			

Print Menu (continued)

Submenu	Menu Selections	Options	Descriptions
Print Position	X Offset	-500/-499.../**0***.../499/500Dots	Moves the print start position (at the top-left corner of pages) horizontally up to -500 (left) to +500 (right) dots in 300 dpi.
	Y Offset	-50/-49.../**0***.../499/500Dots	Moves the print start position (at the top-left corner of pages) vertically up to -50 (up) to +500 (down) dots in 300 dpi.
Auto FF		**Off***/On	Allows you to print the remaining data without pressing **Go**.
HP LaserJet	Font No.	I000.../**I059***.../I071	
	Font Pitch	0.44/**10***.../99.99	
	Font Point	4.00/**12***.../999.75	
	Symbol Set	**PC-8***...	Sets the symbol set or the character set.
	Table Print		Prints code table.
	Auto LF	**Off***/On	ON: CR → CR+LF,OFF: CR → CR
	Auto CR	**Off***/On	ON: LF→LF+CR, FF→FF+CR, or VT → VT+CR OFF: LF → LF, FF → FF, or VT → VT
	Auto WRAP	**Off***/On	Chooses whether a line feed and carriage return will happen when the printer reaches the right margin.
	Auto SKIP	**On***/Off	Chooses whether a line feed and carriage return will happen when the printer position reaches the bottom margin.
	Left Margin	####	Sets the left margin at column 0 to 70 columns at 10 cpi.
	Right Margin	####	Sets the right margin at column 10 to 80 columns at 10 cpi.
	Top Margin	####	Sets the top margin at a distance from the top edge of the paper: 0, 0.33, 0.5, 1.0, 1.5 or 2.0. The default setting is 0.5.
	Bottom Margin	####	Sets the bottom margin at a distance from the bottom edge of the paper - 0, 0.33, 0.5, 1.0, 1.5 or 2.0. The default setting is 0.5.
	Lines	####	Sets the number of lines on each page from 5 to 128 lines.

The default settings are shown in Bold with an asterisk.

Print Menu (continued)

Submenu	Menu Selections	Options	Descriptions
BR-Script (HL-4050CDN only)	Error Print	**On***/Off	
	CAPT	**Off***/On	
The default settings are shown in Bold with an asterisk.			

LAN

Submenu	Menu Selections	Options	Descriptions
TCP/IP	BOOT Method	**Auto***/Static/RARP/BOOTP/DHCP	Choose the IP method that best suits your needs.
	IP Address	###.###.###.### **(000.000.000.000)*** [1]	Enter the IP address.
	Subnet Mask	###.###.###.### **(000.000.000.000)*** [1]	Enter the Subnet mask.
	Gateway	###.###.###.### **(000.000.000.000)***	Enter the Gateway address.
	IP Boot Tries	# **(3*)**	
	APIPA	**On***/Off	Automatically allocates the IP address from the link-local address range. [1]
	IPv6	On/**Off***	
Ethernet		**Auto***/100B-FD/100B-HD/10B-FD/10B-HD	Chooses Ethernet link mode.
Factory Reset	Restores all network settings of the internal print server to default.		
The default settings are shown in Bold with an asterisk.			

[1] On connection to the network, if the machine's 'BOOT Method' is 'Auto' the machine will attempt to automatically set the IP address and Subnet Mask from a boot server such as DHCP or BOOTP. If a boot server cannot be found, an APIPA IP address will be allocated, such as 169. 254. [001-254]. [000-255]. If the 'BOOT Method' of the machine is set to 'Static' you will need to manually enter an IP address from the machine's control panel.

Reset Menu

Display Shows	Description
Reset Printer	Resets the printer and restores all printer settings (including command settings) to settings you have previously made with the control panel buttons.
Factory Reset	Resets the printer and restores the printer settings (including command settings) to the default settings.

Color Correction

Submenu	Menu Selections	Options	Descriptions
ColorCalibration	Calibrate		Carry out calibration to revise the colors.
	Reset		Set the calibration parameters back to the default settings.
Auto Regist.	Registration		Adjusts the print position of each color automatically.
	Frequency	Low/**Medium***/High/Off	Sets the interval time you want to carry out the auto registration.
Manual Regist.	Print Chart		Prints the chart to manually check the registration of the colors.
	Set Registration	1 Magenta Left 2 Cyan Left 3 Yellow Left 4 Magenta Center 5 Cyan Center 6 Yellow Center 7 Magenta Right 8 Cyan Right 9 Yellow Right	Enter the correction value on the chart you printed from the Print Chart.

The default settings are shown in Bold with an asterisk.

Direct Print

Submenu	Menu Selections	Options	Descriptions
Paper Size		Letter/Legal/**A4***/Executive/JIS B5/B5/A5/B6/A6/A4Long/Folio	Sets the size of paper for direct print.
Media Type		**Plain Paper***/Thick Paper/Thicker Paper/Thin Paper/Recycled Paper/Bond Paper	Sets the type of paper for direct print.
Multiple Page		**1in1***/2in1/4in1/9in1/16in1/25in1 1in2×2pages1in3×3pages1in4×4pages1in5×5pages	Sets the pattern if you want to print multiple pages on a single sheet or one page on multiple sheets.
Orientation		**Portrait***/Landscape	This printer can print pages in portrait or landscape orientation.
Collate		**On***/Off	
Print Quality		**Normal***/Fine	

The default settings are shown in Bold with an asterisk.

Direct Print (continued)

Submenu	Menu Selections	Options	Descriptions
PDF Option		**Document*** Document&Stamps Document&Markup	Set the information you want to add to the document.
Index Print		**Simple***/Details	Sets the format of the index for direct print. If you choose Details, printing time will be longer. (See *Printing data from a USB flash memory drive with direct print* on page 29.)
The default settings are shown in Bold with an asterisk.			

PictBridge

Submenu	Menu Selections	Options	Descriptions
Paper Size		Letter/**A4***/B5/A5/B6/A6	Sets the size of paper for PictBridge.
Orientation		<For Letter,A4,B5> **Portrait***/Landscape <For A5,B6,A6> Portrait/**Landscape***	This printer can print pages in portrait or landscape orientation for PictBridge.
Date&Time		**Off***/On	Prints the date and time.
File Name		**Off***/On	Prints the file name.
Print Quality		**Normal***/Fine	
The default settings are shown in Bold with an asterisk.			

Example of changing a menu setting

Setting IP address

1. Press the **+** or **-** button to choose LAN (and to display each setting shown below).

```
Select ▲▼ or OK
Machine Info.
```

↓

```
Select ▲▼ or OK
LAN
```

2. Press **OK**.

```
LAN
TCP / IP
```

3. Press **OK**.

```
TCP / IP
BOOT Method
```

4. Press the **-** button.

```
TCP / IP
IP Address
```

5. Press **OK**.
   The last digit in the first part of the number is blinking.

```
IP Address
192.0.0.192
```

6. Press the **+** or **-** button to increase or decrease the number.
   Press **OK** to go to the next number.

```
IP Address
123.0.0.192
```

7. Repeat this process until you have set your IP address.

```
IP Address
123.45.67.89
```

8. Press **OK** or **Go** to finish the IP address.

```
IP Address
Accepted
```

Default settings

The printer settings have been set at the factory before shipment. They are called default settings (see *Menu table* on page 77). Although you can run the printer with these default settings unchanged, you can tailor the printer with user settings.

Note

Changing the user settings does not affect the default settings. You cannot modify the preset default settings.

The changed user settings can be restored to the default settings with the `Reset Menu`. See *Menu table* on page 77.

Note

- The emulation mode affects the setting.
- If you change `Interface`, `Language`, `Reprint`, `Set Registration`, then performing a factory reset will not revert those settings back to the original factory default settings. Page counter can never be changed.

Network default settings

If you want to reset the print server back to its default settings (resetting all information such as the password and IP address information), follow these steps:

1. Press the **+** or **-** key to choose `LAN`. Press **OK**.

```
Select ▲▼ or OK
Machine Info.
```

↓

```
Select ▲▼ or OK
LAN
```

2. Press the **+** or **-** key to choose `Factory Reset`. Press **OK**.

```
LAN
Factory Reset
```

3. Press **OK** again.

```
Factory Reset
OK?
```

Calibration

The output density for each color may vary depending on the environment the machine is in such as temperature and humidity. Calibration helps you to improve the color density.

1. Press the **+** or **-** key to choose `Color Correction`. Press **OK**.

```
Select ▲▼ or OK
Machine Info.
```

↓

```
Select ▲▼ or OK
Color Correction
```

2. Press **OK**.

```
Color Correction
ColorCalibration
```

3. Press **OK**.

```
ColorCalibration
Calibrate
```

4. Press **OK** again.

```
Calibrate
OK?
```

You can reset the calibration parameters back to those set at the factory.

1. Press the **+** or **-** key to choose `Color Correction`. Press **OK**.

```
Select ▲▼ or OK
Machine Info.
```

↓

```
Select ▲▼ or OK
Color Correction
```

2. Press **OK**.

```
Color Correction
ColorCalibration
```

3. Press the **+** or **-** key to choose `Reset`. Press **OK**.

```
ColorCalibration
Reset
```

4. Press **OK** again.

```
Reset
OK?
```

Auto Registration

Registration

You can adjust the print position of each color automatically.

1. Press the **+** or **-** key to choose `Color Correction`. Press **OK**.

```
Select ▲▼ or OK
Machine Info.
        ↓
Select ▲▼ or OK
Color Correction
```

2. Press the **+** or **-** key to choose `Auto Regist.`. Press **OK**.

```
Color Correction
Auto Regist.
```

3. Press **OK**.

```
Auto Regist.
Registration
```

4. Press **OK** again.

```
Registration
OK?
```

Frequency

You can set how often the auto registration occurs.

1. Press the **+** or **-** key to choose `Color Correction`. Press **OK**.

```
Select ▲▼ or OK
Machine Info.
        ↓
Select ▲▼ or OK
Color Correction
```

2. Press the **+** or **-** key to choose `Auto Regist.`. Press **OK**.

```
Color Correction
Auto Regist.
```

3. Press the **+** or **-** key to choose `Frequency`. Press **OK**.

```
Auto Regist.
Frequency
```

4. Press the **+** or **-** key to choose `Low`, `Medium`, `High` or `Off`. Press **OK**.

Manual Registration

Print Chart

You can print the color registration chart to manually check the registration of the colors.

1. Press the **+** or **-** key to choose `Color Correction`. Press **OK**.

```
Select ▲▼ or OK
Machine Info.
```

↓

```
Select ▲▼ or OK
Color Correction
```

2. Press the **+** or **-** key to choose `Manual Regist.`. Press **OK**.

```
Color Correction
Manual Regist.
```

3. Press **OK**.

```
Manual Regist.
Print Chart
```

Set Registration

You can correct the color registration manually.

1. Press the **+** or **-** key to choose `Color Correction`. Press **OK**.

```
Select ▲▼ or OK
Machine Info.
```

↓

```
Select ▲▼ or OK
Color Correction
```

2. Press the **+** or **-** key to choose `Manual Regist.`. Press **OK**.

```
Color Correction
Manual Regist.
```

3. Press the **+** or **-** key to choose `Set Registration`. Press **OK** again.

```
Manual Regist.
Set Registration
```

4. To set the color registration, follow the instruction on Color Registration Chart.
5. Press **OK**.

5 Options

This printer has the following optional accessories. You can increase the capabilities of the printer with these items.

Lower tray (HL-4050CDN only)	**SO-DIMM memory**
LT-100CL	
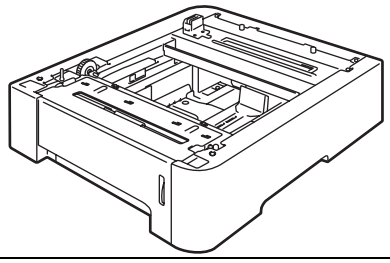	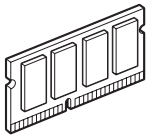
See *Lower tray (LT-100CL) (HL-4050CDN only)* on this page.	See *SO-DIMM* on page 91.

Lower tray (LT-100CL) (HL-4050CDN only)

One optional lower tray (Tray 2) can be installed, and the lower tray can hold up to 500 sheets of 80 g/m^2 (20 lb) paper. When the optional tray is installed, the printer can hold up to 800 sheets of plain 80 g/m^2 (20 lb) paper. If you want to buy the optional lower tray unit, call the dealer you bought the printer from or Brother Customer Service.

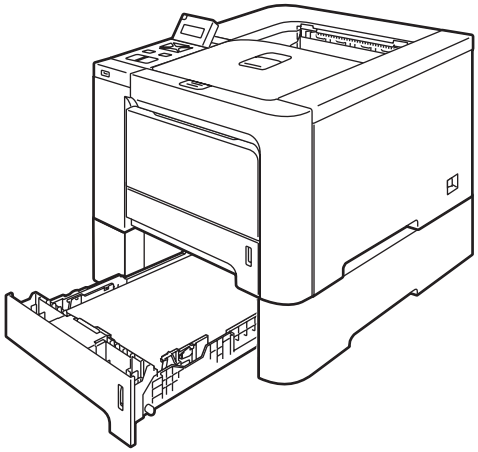

For setup, see the User's Guide that we have supplied with the lower tray unit.

SO-DIMM

The printer has 64 MB of standard memory and one slot for optional memory expansion. You can expand the memory up to 576 MB by installing a Dual In-line Memory Module (SO-DIMM).

SO-DIMM types

You can install the following SO-DIMMs:

- 128 MB TechWorks PM133-128
- 256 MB TechWorks PM133-256
- 512 MB TechWorks PM133-512
- 128 MB Buffalo Technology 12462-0001
- 256 MB Buffalo Technology 12485-0001
- 512 MB Buffalo Technology 12475-0001

Note

- For more information, visit the Buffalo Techonology site at http://www.buffalotech.com.
- For more information, visit the Techworks web site at http://www.techworks.com.

In general, the SO-DIMM must have the following specifications:

Type: 144 pin and 64 bit output

CAS latency: 2

Clock frequency: 100 MHz or more

Capacity: 64, 128, 256 or 512 MB

Height: 31.75 mm (1.25 in.)

SDRAM can be used.

Note

- There might be some SO-DIMMs that will not work with the printer.
- For more information, call the dealer you bought the printer from or Brother Customer Service.

Installing extra memory

Note

Always turn off the printer power switch before installing or removing the SO-DIMM.

1. Turn off the printer power switch, and then unplug the printer. Disconnect the interface cable from the printer.
2. Remove the two SO-DIMM covers (both the plastic one (1) and the metal one (2)).

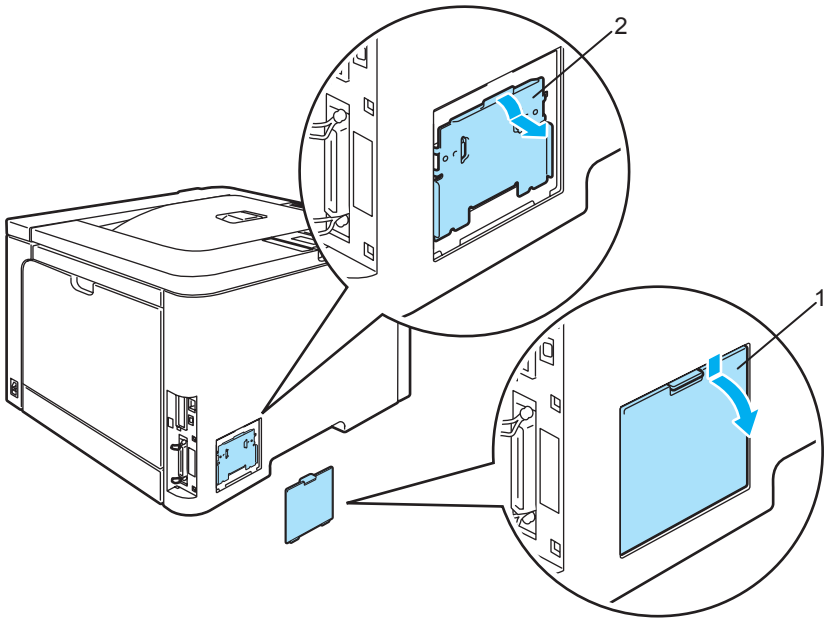

3. Unpack the SO-DIMM and hold it by its edges.

CAUTION

To prevent damage to the printer from static electricity, DO NOT touch the memory chips or the board surface.

4. Hold the SO-DIMM by the edges and align the notches in the SO-DIMM with the protrusions in the slot. Insert the SO-DIMM diagonally (1), then tilt it toward the interface board until it clicks into place (2).

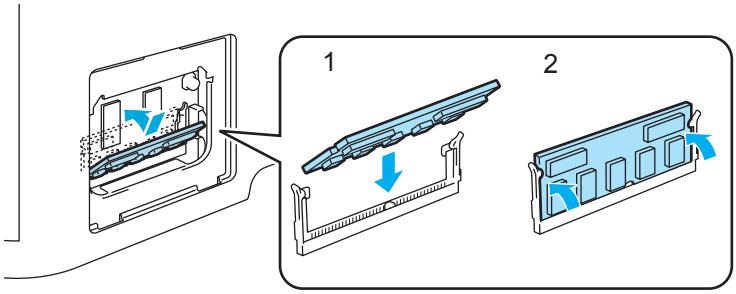

5 Put the two SO-DIMM covers back on (both the plastic one (1) and the metal one (2)).

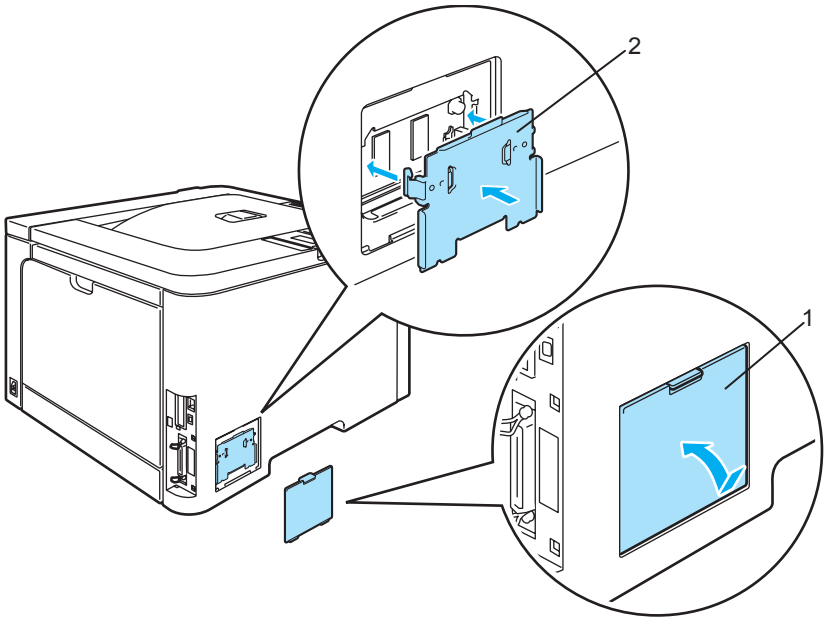

6 Reconnect the interface cable to your printer. Plug the printer back in, and then turn on the power switch.

Note

To make sure that you have installed the SO-DIMM properly, you can print the printer settings page that shows the current memory size. (See *Menu table* on page 77.)

6 Routine Maintenance

Replacing the consumable items

When you need to replace the consumable items, the following messages will appear on the LCD.

LCD messages	Consumable item to replace	Approximate life	How to replace	Order No.
Toner Life End	Toner cartridge	<Black> 2,500 pages [1] [2] 5,000 pages [1] [3] <Cyan, Magenta,Yellow> 1,500 pages [1] [2] 4,000 pages [1] [3]	See page 96	TN-170C [2], TN-170M [2], TN-170Y [2], TN-170BK [2], TN-175C [3], TN-175M [3], TN-175Y [3], TN-175BK [3]
Waste Toner Full	Waste toner box	20,000 pages [4]	See page 114	WT-100CL

[1] at 5% print coverage (A4 or Letter size). The actual number of printed pages will vary depending on the print jobs and paper you use.

[2] Standard toner cartridge.

[3] High-capacity toner cartridge.

[4] at 5% print coverage for CMYK each (A4 or Letter size). The actual number of printed pages will vary depending on the print jobs and paper you use.

The following messages appear on the LCD in the Ready state. These messages provide advanced warnings to replace the consumable items before they run out. To avoid any inconvenience, you may want to buy spare consumable items before the printer stops printing.

LCD messages	Consumable part to replace	Approximate life	How to replace	Order No.
Ready □■■■ K Y M C	Toner cartridge, Black	2,500 pages [1] [2] [3] 5,000 pages [1] [2] [4]	See page 96	TN-170BK [3] TN-175BK [4]
Ready ■□■■ K Y M C	Toner cartridge, Yellow	1,500 pages [1] [2] [3] 4,000 pages [1] [2] [4]		TN-170Y [3] TN-175Y [4]
Ready ■■□■ K Y M C	Toner cartridge, Magenta			TN-170M [3] TN-175M [4]
Ready ■■■□ K Y M C	Toner cartridge, Cyan			TN-170C [3] TN-175C [4]

[1] at 5% print coverage (A4 or Letter size). The actual number of printed pages will vary depending on the print jobs and paper you use.

[2] For example, if the Yellow and Magenta toner cartridges are almost empty, the indication will be '■□□■' (□=blinking ■).
If the Yellow and Magenta toner cartridges are empty, the ■ indicator will have disappeared.

[3] Standard toner cartridge.

[4] High-capacity toner cartridge.

The following are maintenance messages that appear alternately with the Ready message on the upper row of the LCD when the printer is in the Ready state. These messages advise you that you will need to replace each of the consumable items as soon as possible, since the consumable item's end of life has been reached. The printer will continue printing when any of these messages appear on the LCD.

LCD messages	Consumable part to replace	Approximate life	How to replace	Order No.
Drum End Soon	Drum Unit	17,000 pages [1]	See page 103	DR-170CL
Waste Toner Soon	Waste toner box	20,000 pages [1] [2]	See page 114	WT-100CL
Change Belt Unit	Belt unit	50,000 pages [1]	See page 109	BU-100CL
Fuser Unit End	Fuser unit	80,000 pages [1]	Call your dealer or Brother Customer Service for a replacement fuser unit.	
Laser Unit End	Laser unit	100,000 pages [1]	Call your dealer or Brother Customer Service for a replacement laser unit.	
Change PF Kit1,2	Paper feeding kit 1, 2. (Paper pick-up roller Separator pad)	100,000 pages [1]	Call your dealer or Brother Customer Service for a replacement paper feeding kit 1, 2.	
Change PF KitMP	Paper feeding kit MP. (Paper pick-up roller Separator pad)	50,000 pages [1]	Call your dealer or Brother Customer Service for a replacement of the paper feeding kit MP.	

[1] When printing A4 or Letter size paper. The actual number of printed pages will vary depending on the print jobs and paper you use.

[2] at 5% print coverage for CMYK each (A4 or Letter size).

Note

- Discard used consumable items according to local regulations, keeping it separate from domestic waste. If you have questions, call your local waste disposal office. Be sure to reseal the consumable items tightly so that the material inside does not spill.
- We recommend placing used consumable items on a piece of paper to prevent accidentally spilling or scattering the material inside.
- If you use paper that is not a direct equivalent for the recommended paper, the life of consumable items and printer parts may be reduced.
- The projected life for each of toner cartridges and a waste toner box is based on an average of 5% coverage of the printable area using any color toner cartridge. Frequency of replacement will vary depending on the complexity of printed pages, percentage of coverage and type of media used.

Toner cartridges

Note

- The amount of toner used varies according to what is printed on the page and the print density setting.
- Wait to unpack the toner cartridge until immediately before you put it into the printer.

Toner nearly empty message

Check printed pages, page counter, and display messages regularly. If the ■ indicator starts blinking, the printer has nearly run out of toner or the toner is not evenly distributed inside the cartridge.

```
Ready
■ □ □ ■
```

The four ■ marks (also □, □=blinking ■) indicate the Black (K), Yellow (Y), Magenta (M), Cyan (C) toner cartridges from left to right.

Although you can print up to 300 additional pages (at 5% coverage) after the Toner Low message first appears, be sure to replace the toner cartridge with a new one before it becomes completely empty. When this occurs, the ■ indicator on the LCD will disappear.

Toner Life End message

When the following message appears on the LCD, you need to replace the toner cartridge:

```
Toner Life End
Replace Black(K)
```

The second line of the LCD indicates which color you need to replace.

Replacing a toner cartridge

Note

- To ensure high quality printing, we recommend that you use only genuine Brother toner cartridges. When you want to buy toner cartridges, call your dealer or Brother Customer Service.
- We recommend that you clean the printer when you replace the toner cartridge. See *Cleaning* on page 120.

CAUTION

Wait to unpack the toner cartridge until immediately before you put it in the printer. If toner cartridges are left unpacked for a long time the toner life will be shortened.

If an unpacked drum unit is put in direct sunlight or room light, the unit may be damaged.

Put the toner cartridge in the drum unit immediately after you have removed the protective cover. To prevent any degradation to the print quality, DO NOT touch the shaded parts shown in the illustrations.

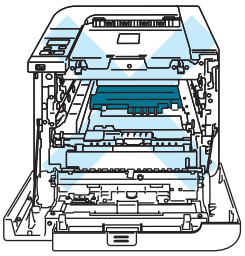

CAUTION

Brother machines are designed to work with toner of a particular specification and will work to a level of optimum performance when used with genuine Brother branded toner cartridges. Brother cannot guarantee this optimum performance if toner or toner cartridges of other specifications are used. Brother does not therefore recommend the use of cartridges other than genuine Brother branded cartridges with this machine.

If damage is caused to the drum unit or other part of this machine as a result of using other manufacturer's products with this machine, any repairs required as a result may not be covered by the warranty.

1. Turn off the printer power switch. Press the front cover release button and then open the front cover.

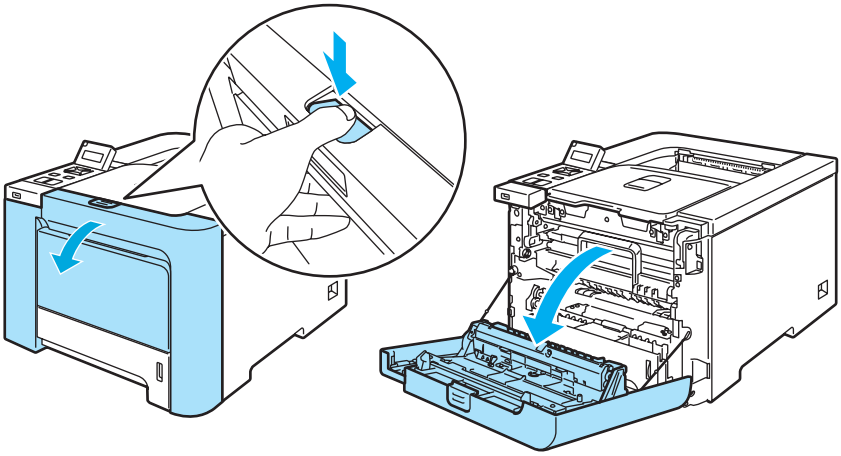

2 Hold the green handle of the drum unit. Lift the drum unit up and then pull it out until it stops.

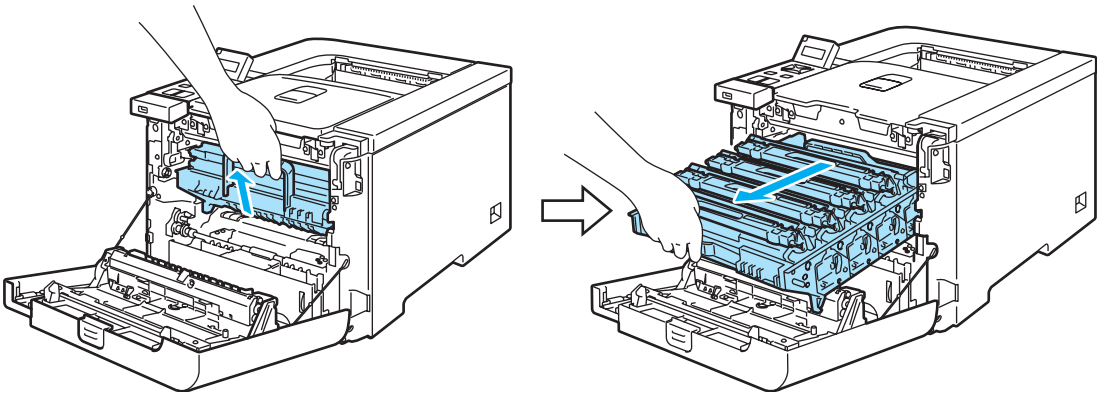

3 Hold the handle of the toner cartridge and pull it out of the drum unit. Repeat this for all the toner cartridges.

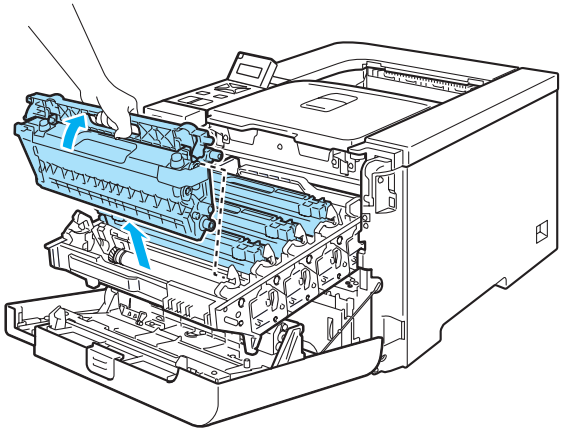

CAUTION

We recommend that you place the toner cartridges on a clean, flat surface with a piece of disposable paper underneath them in case you accidentally spill or scatter toner.

DO NOT put a toner cartridge into a fire. It could explode, resulting in injuries.

Handle the toner cartridge carefully. If toner scatters on your hands or clothes, wipe or wash it off with cold water at once.

To avoid print quality problems, DO NOT touch the shaded parts shown in the illustrations.

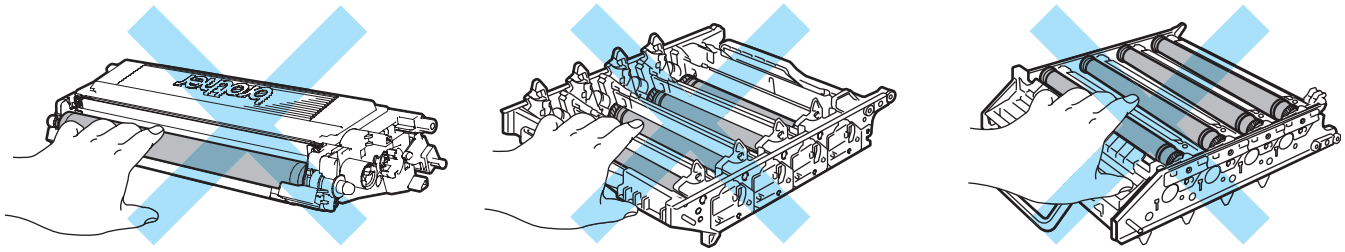

Note

- Be sure to seal up the toner cartridge tightly in a suitable bag so that toner powder does not spill out of the cartridge.
- Discard the used toner cartridge according to local regulations, keeping it separate from domestic waste. If you have questions, call your local waste disposal office.

4 Clean the corona wire as follows:

1 Push to release the latches of the white corona wire cover (1), and then open the cover.

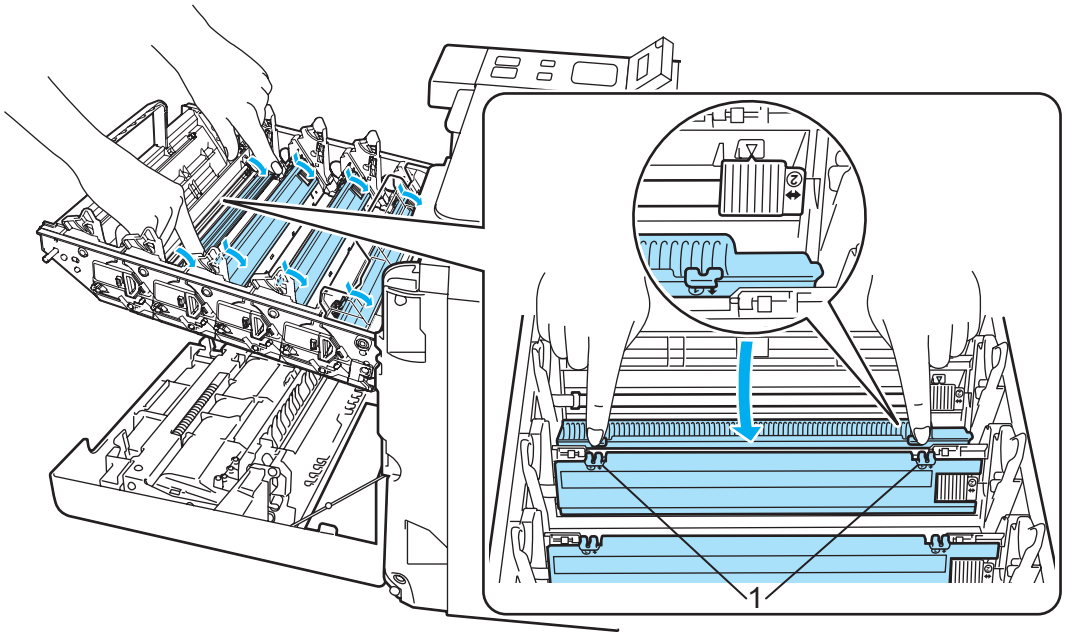

2 Clean the corona wire inside the drum unit by gently sliding the green tab from left to right and right to left several times.

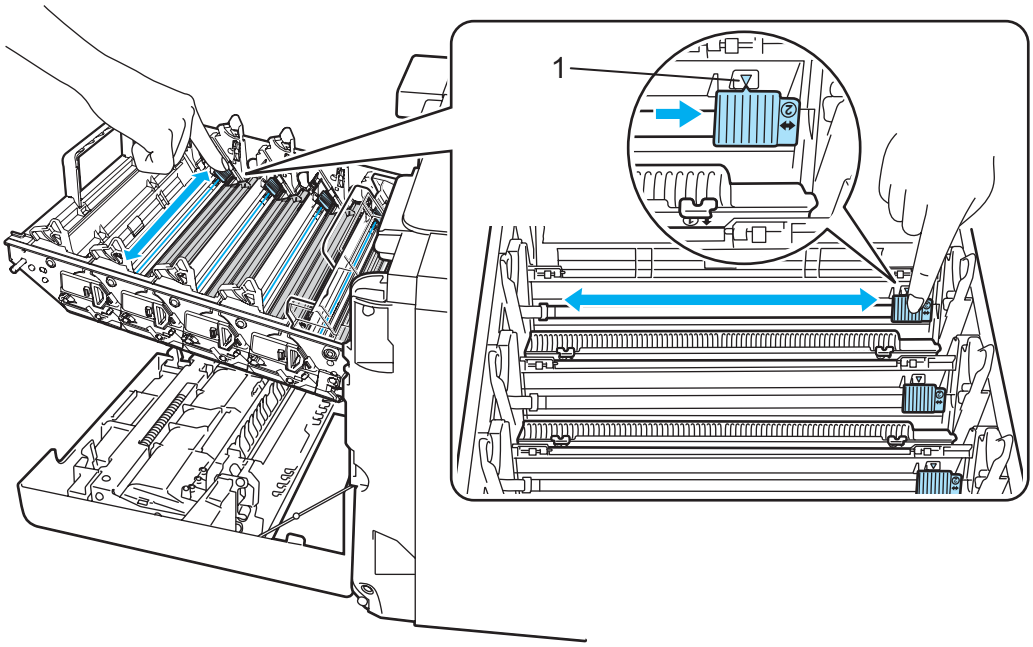

CAUTION

Be sure to return the tab to the home position ▲ (1). If you do not, printed pages may have a vertical stripe.

3 Close the corona wire cover.

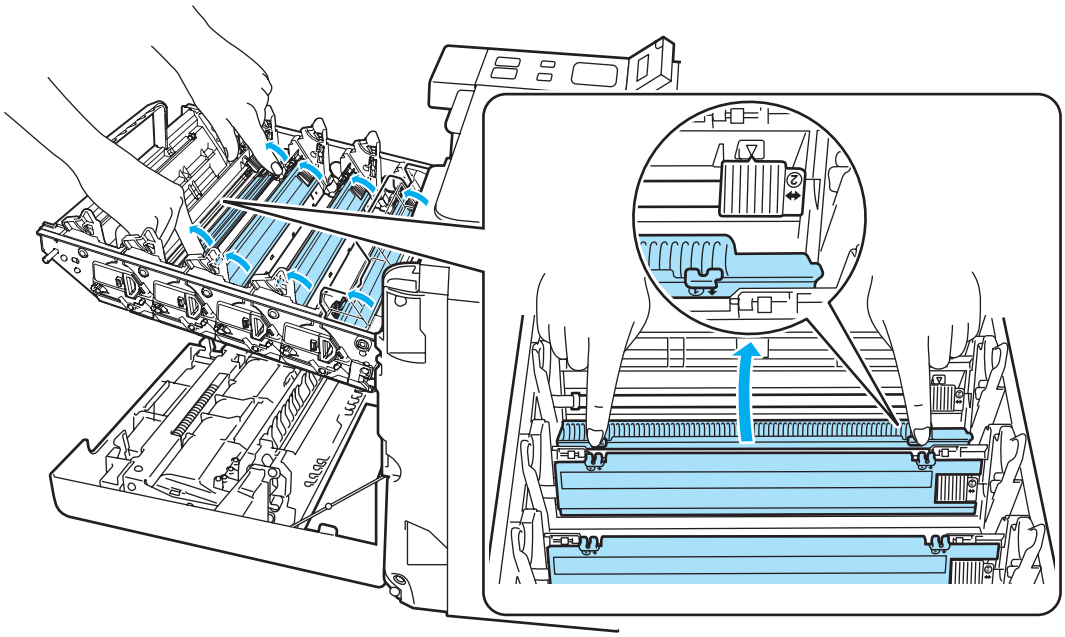

4 Repeat steps **1** to **3** to clean each of three remaining corona wires.

5 Unpack the new toner cartridge. Hold the cartridge with both hands and gently rock it five or six times to spread the toner evenly inside the cartridge.

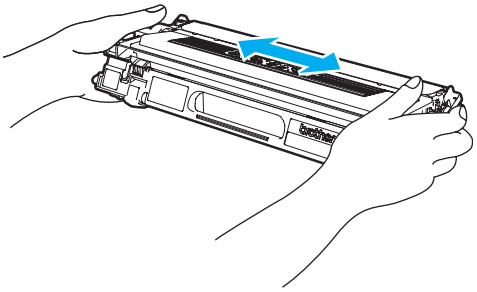

6 Remove the protective cover.

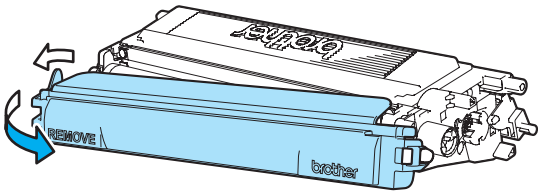

7 Hold the handle of the toner cartridge and slide the toner cartridge into the drum unit. Make sure that you match the toner cartridge color to the same color label on the drum unit, and make sure that you fold

down the toner cartridge handle (1) once the toner cartridge is in place. Repeat this for all the toner cartridges.

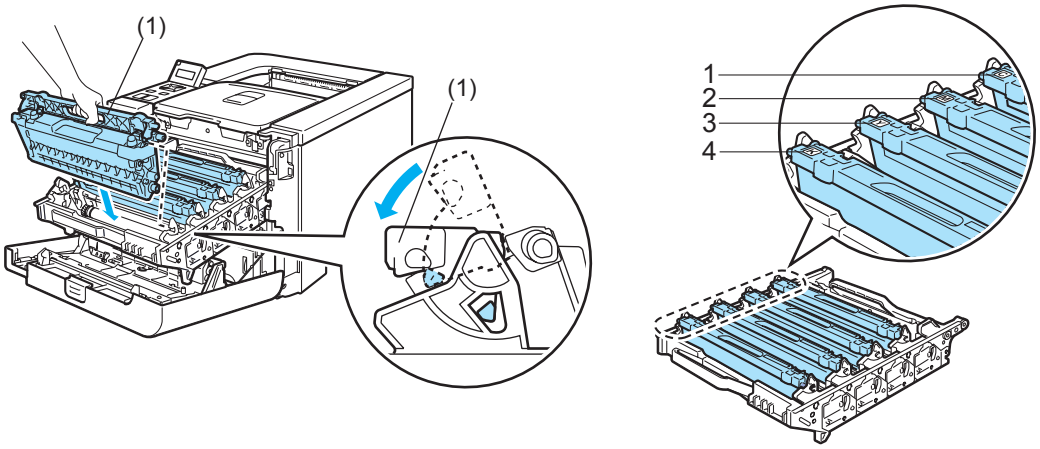

1.C - Cyan
2.M - Magenta
3.Y - Yellow
4.K - Black

8 Put the drum unit back in the printer.

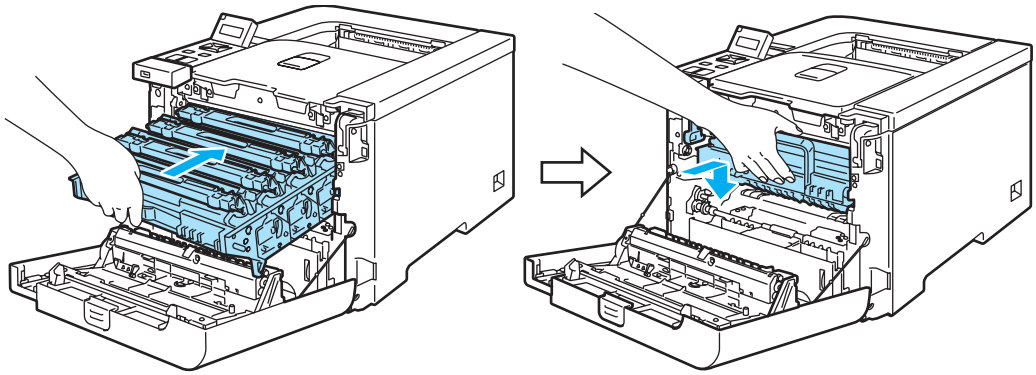

9 Close the front cover of the printer.

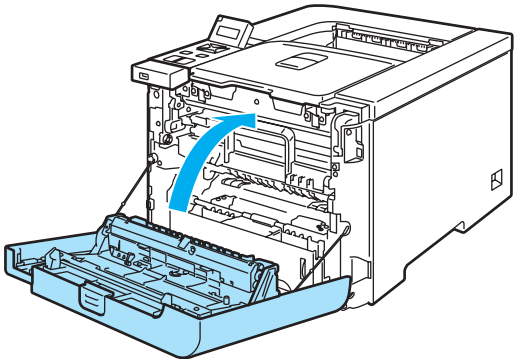

Drum unit

Order No. DR-170CL

A new drum unit can print approximately 17,000 A4 or Letter size single-sided pages.

Note

- There are many factors that determine the actual drum life, such as the temperature, humidity, type of paper, type of toner used and so on. Under ideal conditions, the average drum life is estimated at approximately 17,000 pages. The actual number of pages that your drum will print may be significantly less than this estimate. Because we have no control over the many factors that determine the actual drum life, we cannot guarantee a minimum number of pages that will be printed by your drum.
- For best performance, use only genuine Brother toner. The printer should be used only in a clean, dust-free environment with adequate ventilation.
- Printing with a third-party drum unit may reduce not only the print quality but also the quality and life of the printer itself. Warranty coverage does not apply to problems caused by the use of a third-party drum unit.

Drum End Soon message

```
Drum End Soon
```

If the LCD shows `Drum End Soon`, it means the drum unit is near the end of its life. We recommend that you replace the drum unit with a new one before there is a noticeable deterioration in the print quality.

Replacing the drum unit

CAUTION

While removing the drum unit, handle it carefully because it may contain toner.

Every time you replace the drum unit, clean the inside of the printer. (See *Cleaning* on page 120.)

1. Turn off the printer power switch. Press the front cover release button and then open the front cover.

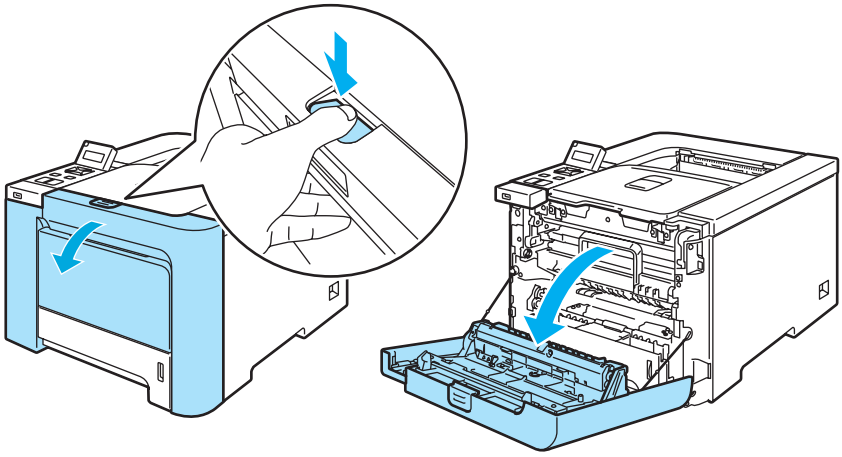

2 Hold the green handle of the drum unit. Lift the drum unit up and then pull it out until it stops.

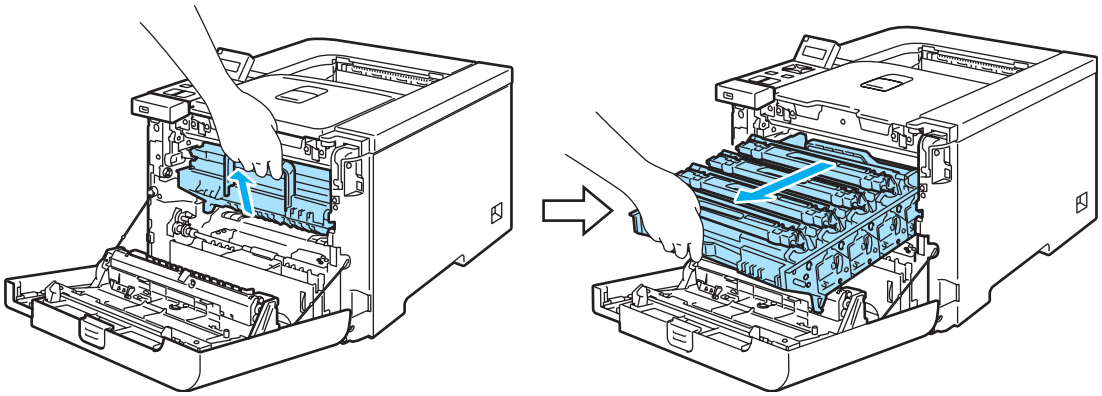

3 Release the gray lock lever (1) that is on the left side of the printer. Pull the drum unit completely out of the printer using the green handles on the drum unit.

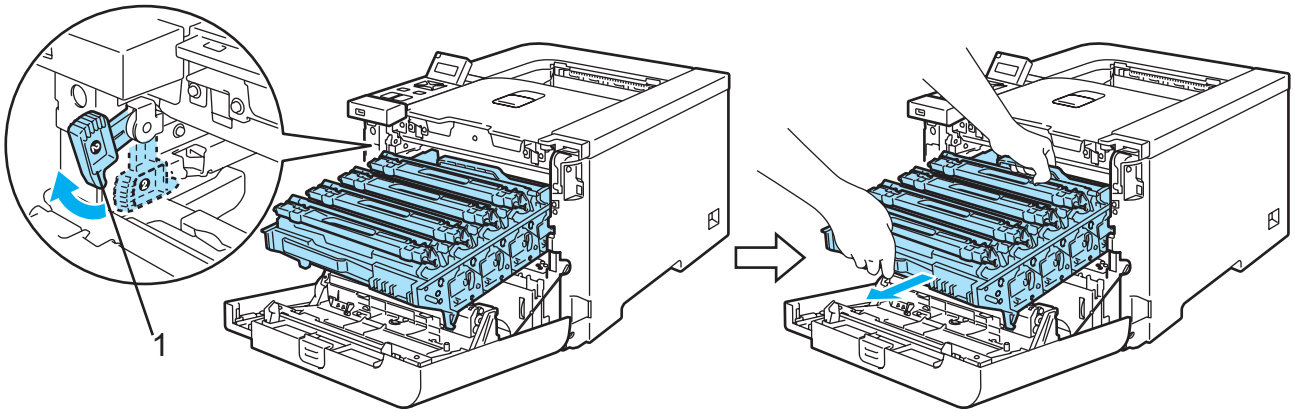

CAUTION

Hold the green handles of the drum unit when you carry it. DO NOT hold the sides of the drum unit.

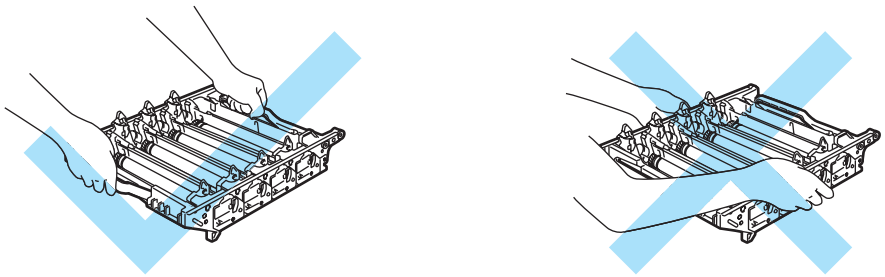

We recommend that you place the drum unit on a clean, flat surface with a piece of disposable paper underneath it in case you accidentally spill or scatter toner.

Handle the toner cartridges carefully. If toner scatters on your hands or clothes, wipe or wash it off with cold water at once.

4 Hold the handle of the toner cartridge and pull it out of the drum unit. Repeat this for all the toner cartridges.

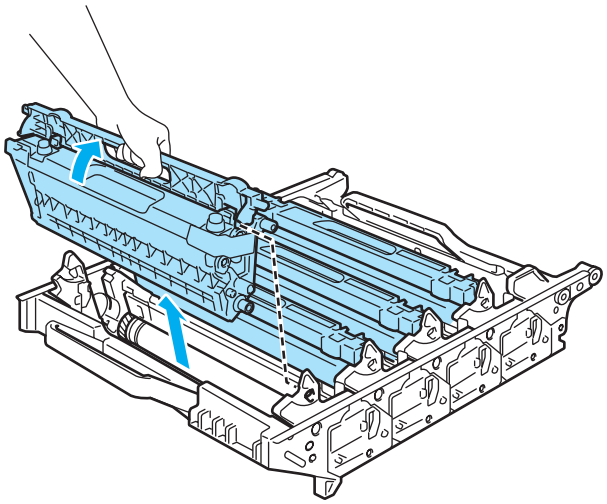

CAUTION

To prevent damage to the printer from static electricity, DO NOT touch the electrodes shown in the illustration.

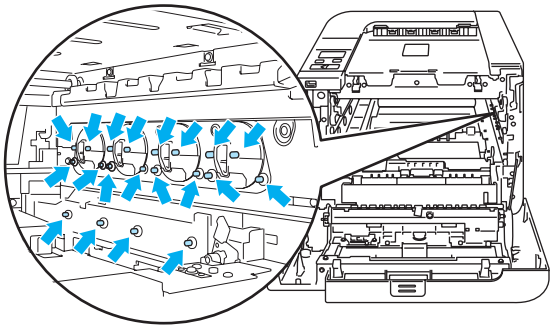

To avoid print quality problems, DO NOT touch the shaded parts shown in the illustrations.

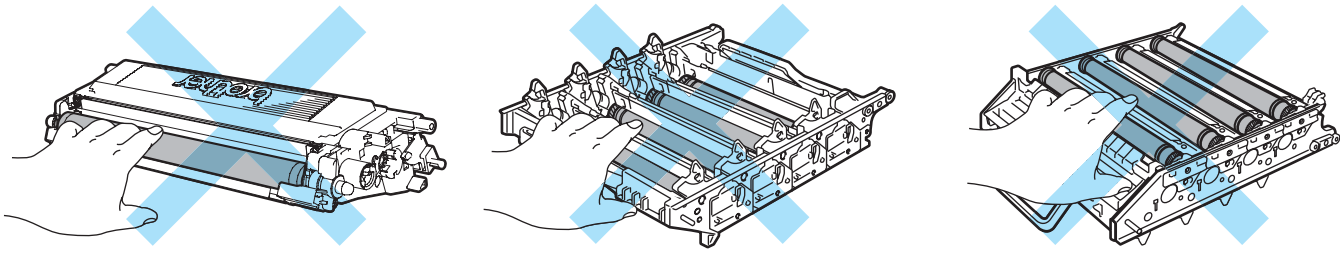

5 Unpack the new drum unit and remove the protective cover.

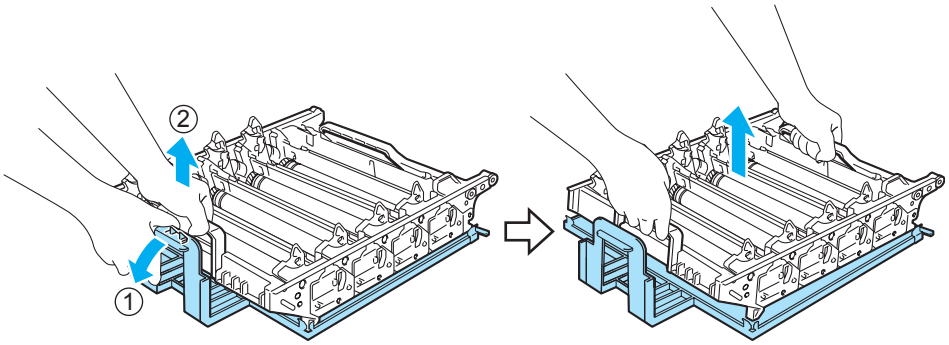

CAUTION

Wait to unpack a drum unit until immediately before you put it in the printer. Exposure to direct sunlight or room light may damage the drum unit.

6 Hold the handle of the toner cartridge and slide the toner cartridge into the drum unit. Make sure that you match the toner cartridge color to the same color label on the drum unit, and make sure that you fold down the toner cartridge handle (1) once the toner cartridge is in place. Repeat this for all the toner cartridges.

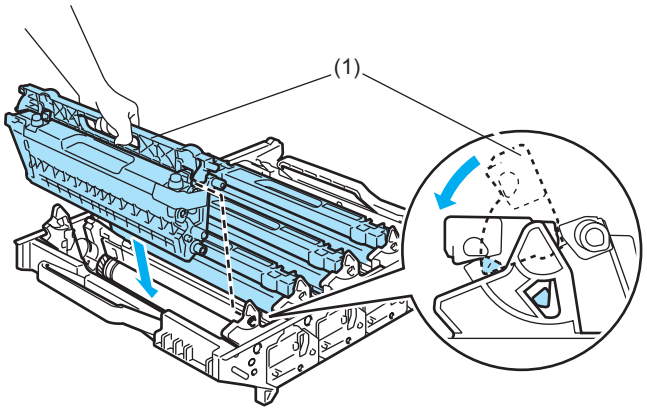

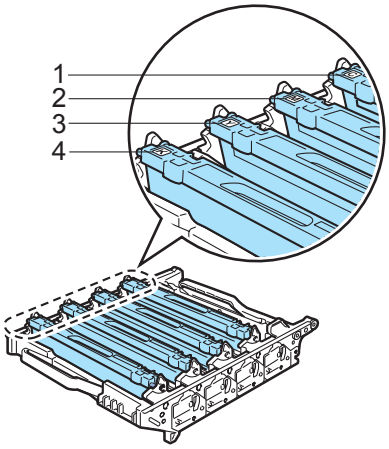

1.C - Cyan
2.M - Magenta
3.Y - Yellow
4.K - Black

7 Put the drum unit back in the printer as follows.

1 Make sure that the gray lock lever (1) is in the up position and put the drum unit in the printer. Push down the gray lock lever (1).

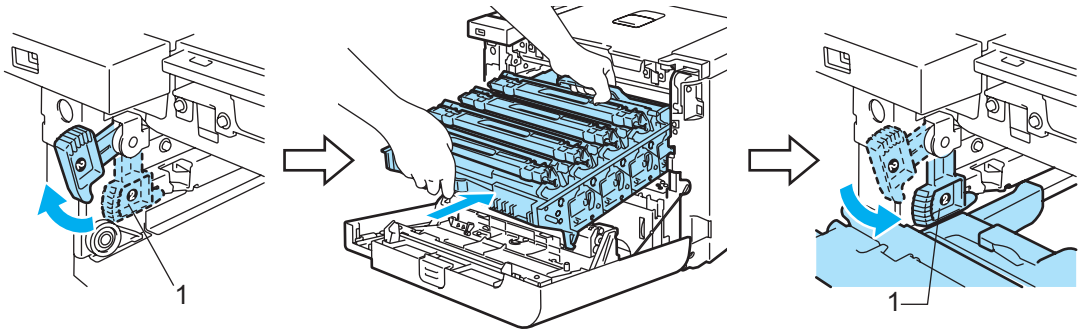

Note

When you put the drum unit in the printer, match the green guides (1) of the drum unit handle to the green arrows (2) on both sides of the machine.

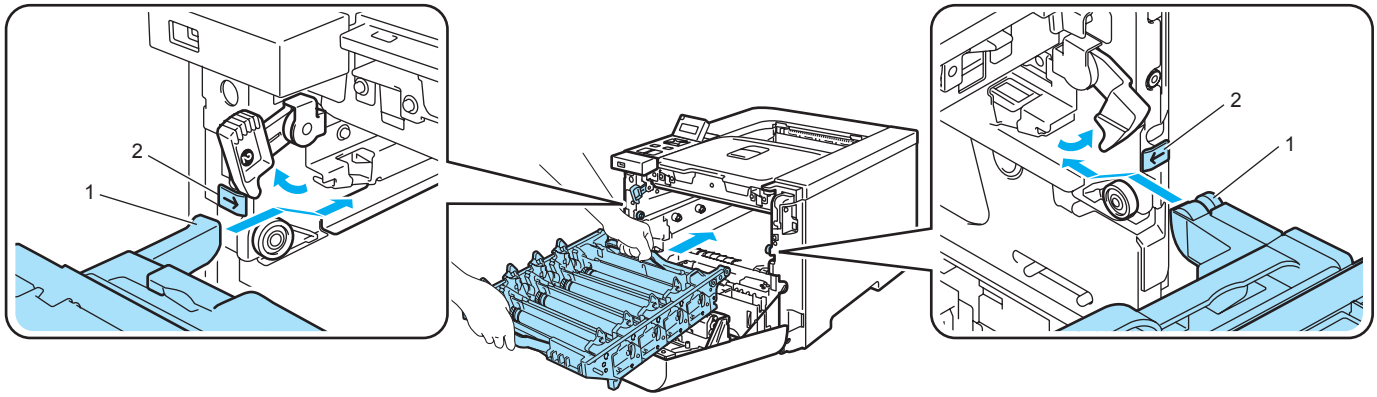

2 Push the drum unit in until it stops.

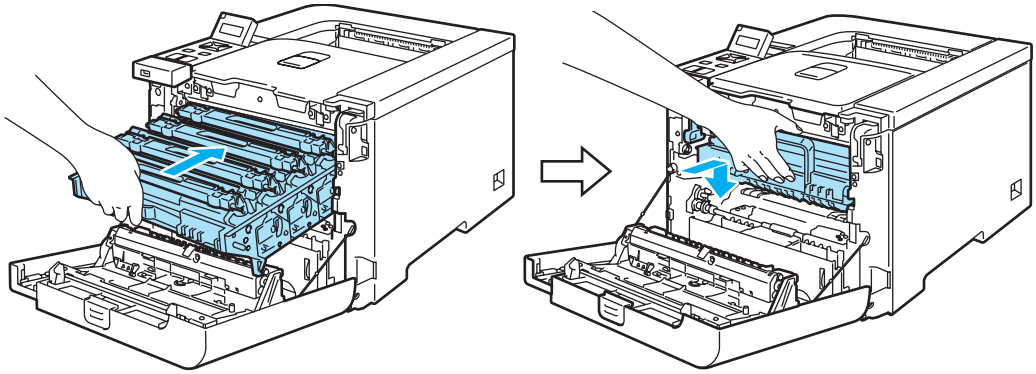

8 Close the front cover.

When you replace the drum unit with a new one, you need to reset the drum counter by completing the following steps:

1. Turn the printer power switch back on.
2. Press the **+** or **-** key to choose `Machine Info.`.
3. Press **OK** to proceed to the next menu level, and then press the **+** or **-** key to choose `Reset Parts Life`.
4. Press **OK**, and then press the **+** key to choose `Drum Unit`.
5. Press **OK** two times.

Belt unit

Order No. BU-100CL

Change Belt Unit message

When the belt unit runs out, the following message appears on the LCD. When you see this message, you must replace the belt unit:

```
Change Belt Unit
```

CAUTION

DO NOT touch the surface of the belt unit. If you touch it, it could degrade print quality.

Damage caused by incorrect handling of the belt unit may void your warranty.

Replacing the belt unit

1. Turn off the printer power switch. Press the front cover release button and then open the front cover.

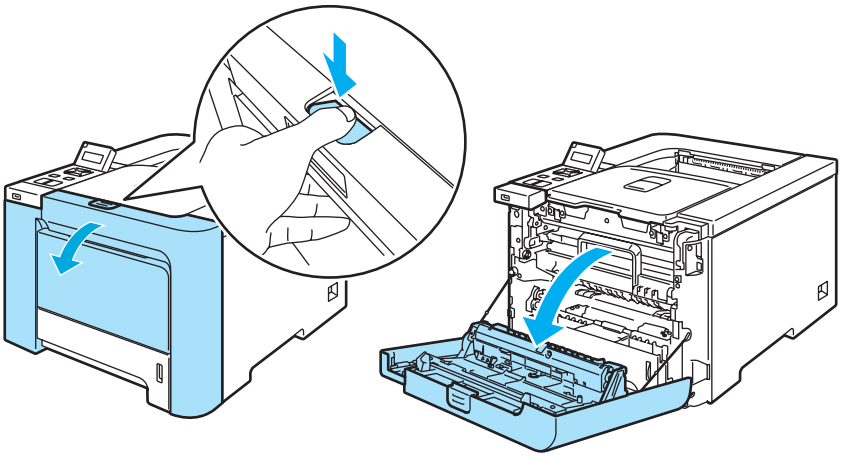

2. Hold the green handle of the drum unit. Lift the drum unit up and then pull it out until it stops.

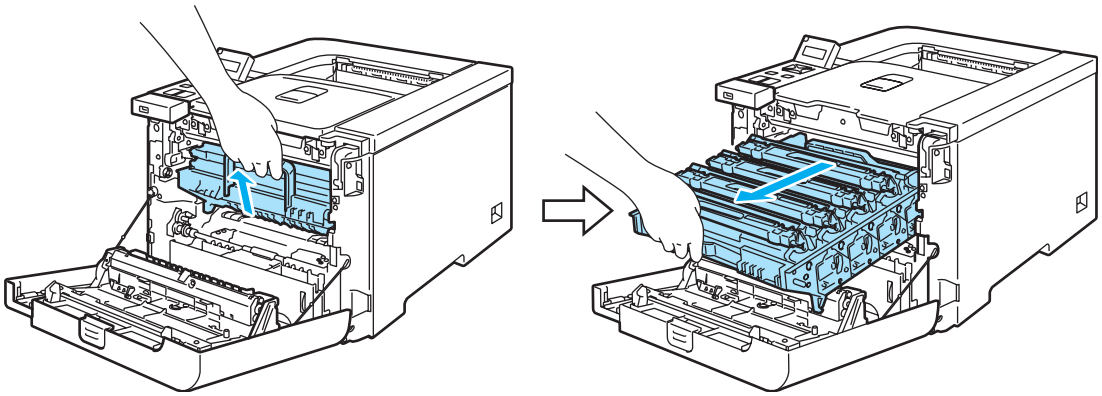

3 Release the gray lock lever (1) that is on the left side of the printer. Pull the drum unit completely out of the printer using the green handles on the drum unit.

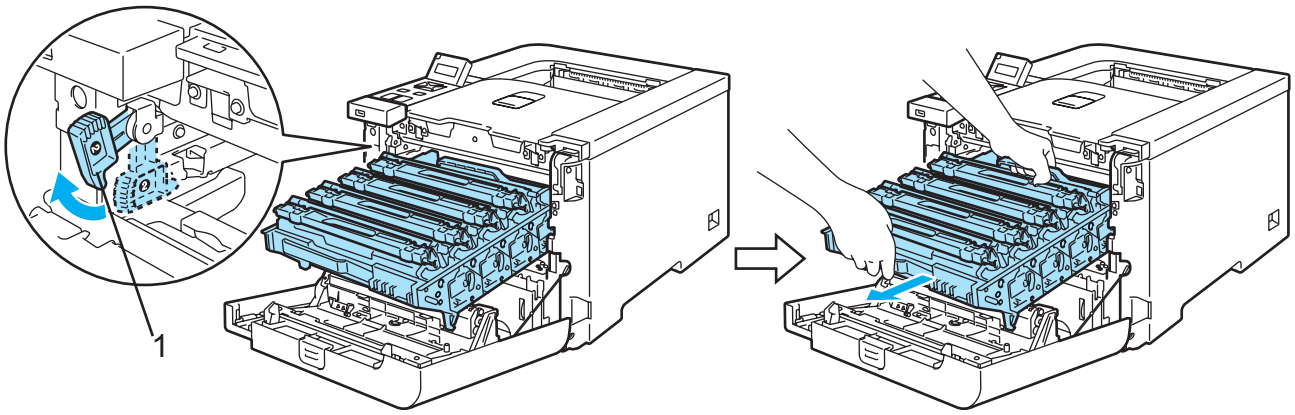

CAUTION

Hold the green handles of the drum unit when you carry it. DO NOT hold the sides of the drum unit.

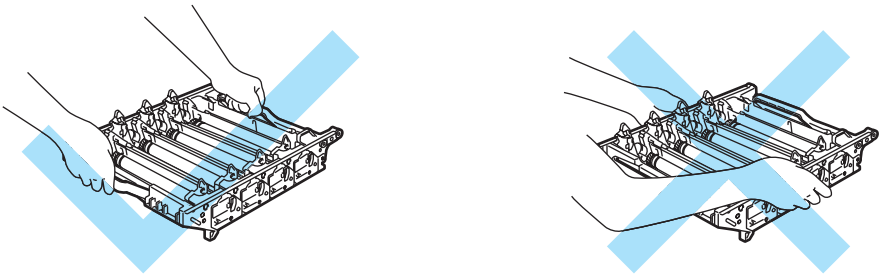

We recommend that you place the drum unit and belt unit on a clean, flat surface with a piece of disposable paper underneath it in case you accidentally spill or scatter toner.

To prevent damage to the printer from static electricity, DO NOT touch the electrodes shown in the illustration.

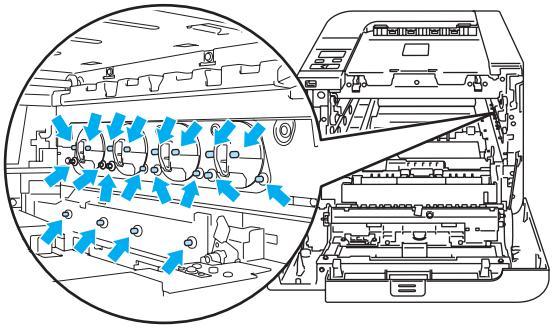

4 Hold the green parts of the belt unit with both hands and lift the belt unit up, then pull it out.

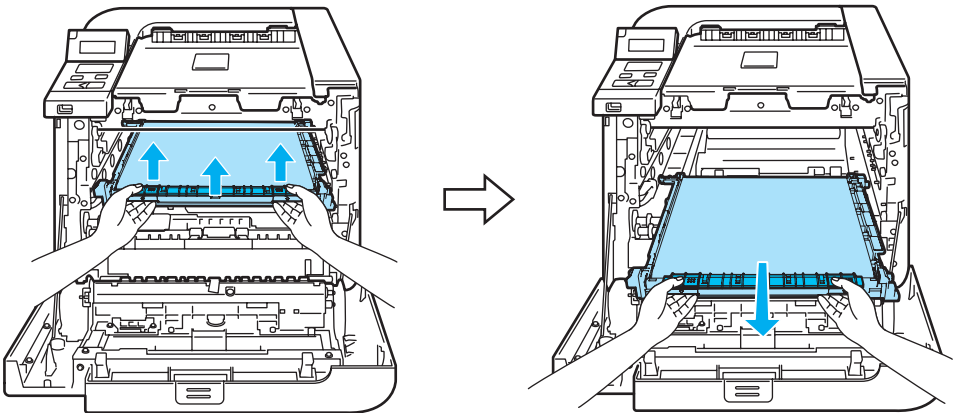

5 Unpack the new belt unit, and remove the protective cover and paper.

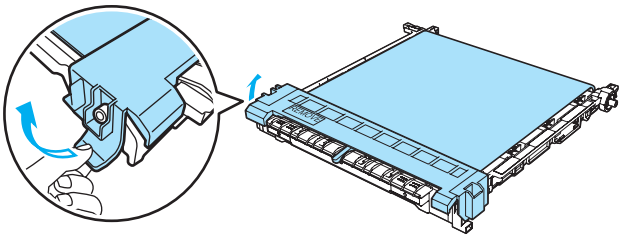

6 Put the new belt unit in the printer. Match the ↓ mark on the belt unit to the ↑ mark on the printer. Push down on the green area of the belt unit to lock it in place.

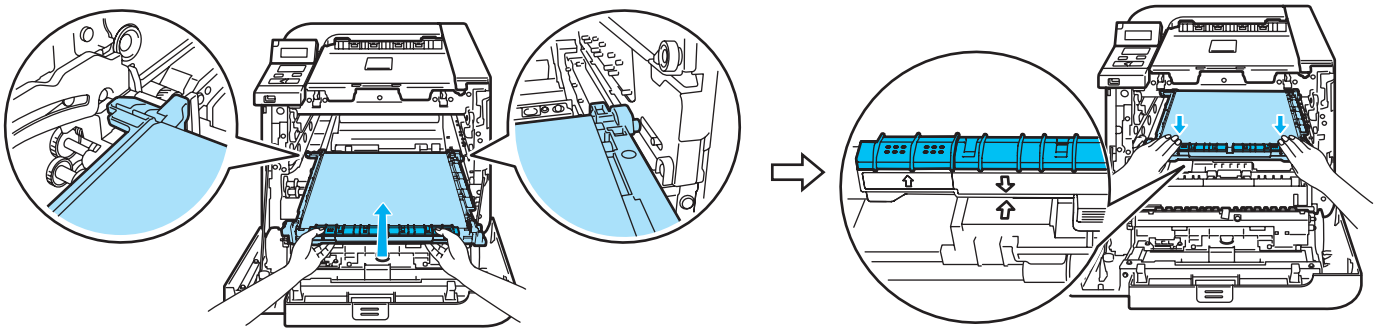

7 Put the drum unit back in the printer as follows.

1 Make sure that the gray lock lever (1) is in the up position and put the drum unit in the printer. Push down the gray lock lever (1).

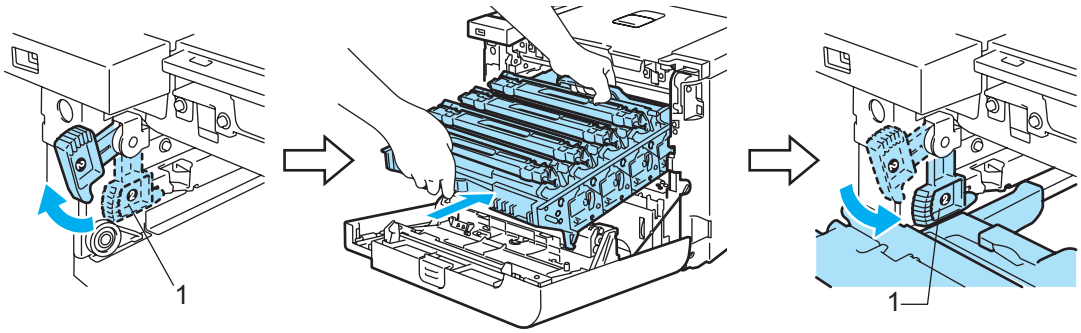

Note

When you put the drum unit in the printer, match the green guides (1) of the drum unit handle to the green arrows (2) on both sides of the machine.

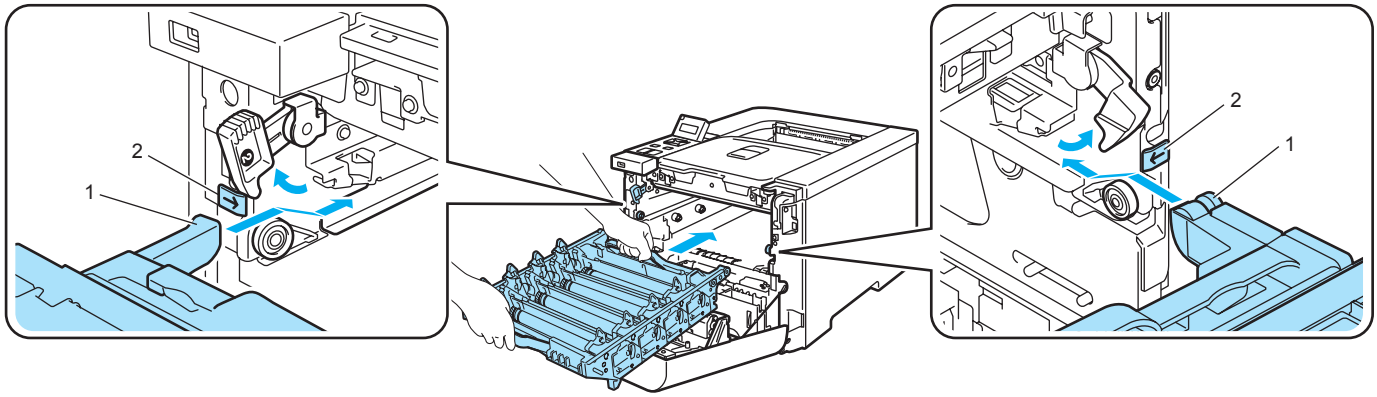

2 Push the drum unit in until it stops.

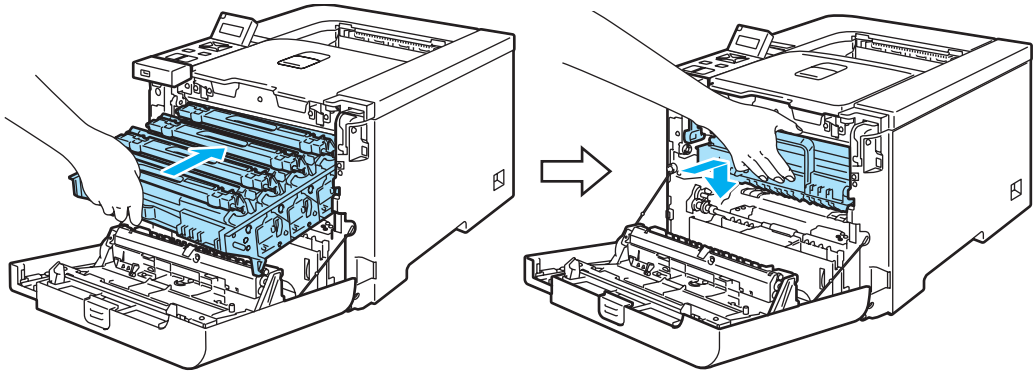

8 Close the front cover.

When you replace the belt unit with a new one, you need to reset the belt unit counter by completing the following steps:

1. Turn the printer power switch back on.
2. Press the **+** or **-** button to choose `Machine Info.`.
3. Press **OK** to proceed to the next menu level, and then press the **+** or **-** button to choose `Reset Parts Life`.
4. Press **OK**, and then press the **+** button to choose `Belt Unit`.
5. Press **OK** two times.

Waste toner box

Order No. WT-100CL

After you have printed approximately 20,000 pages at 5% coverage for CMYK each, you must change the waste toner box. The actual number of printed pages will vary depending on the print jobs and paper you use.

```
Waste Toner Soon
```

Waste Toner Box Full message

When the waste toner box is full, the following message appears on the LCD and the printer will stop printing. When you see this message, you must replace the waste toner box:

```
Waste Toner Full
```


WARNING

DO NOT reuse the waste toner box.

DO NOT put the waste toner box into a fire. It could explode.

Be careful not to spill the toner. DO NOT inhale or allow it to get into your eyes.

Replacing the waste toner box

1. Turn off the printer power switch. Press the front cover release button and then open the front cover.

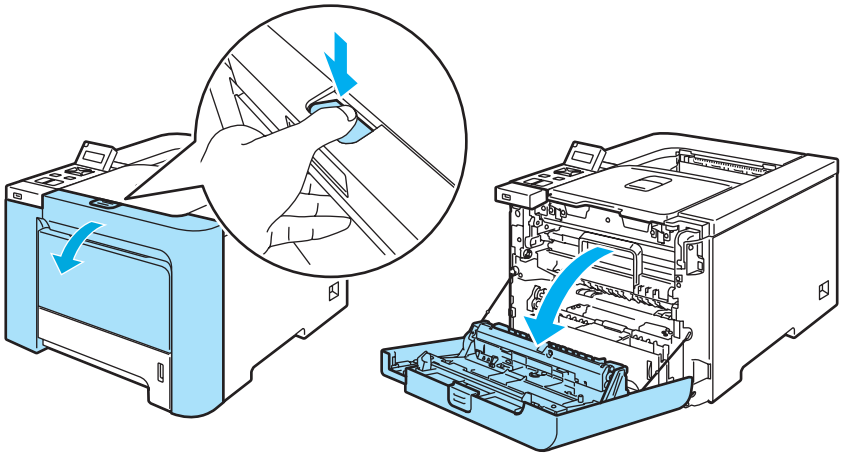

2 Hold the green handle of the drum unit. Lift the drum unit up and then pull it out until it stops.

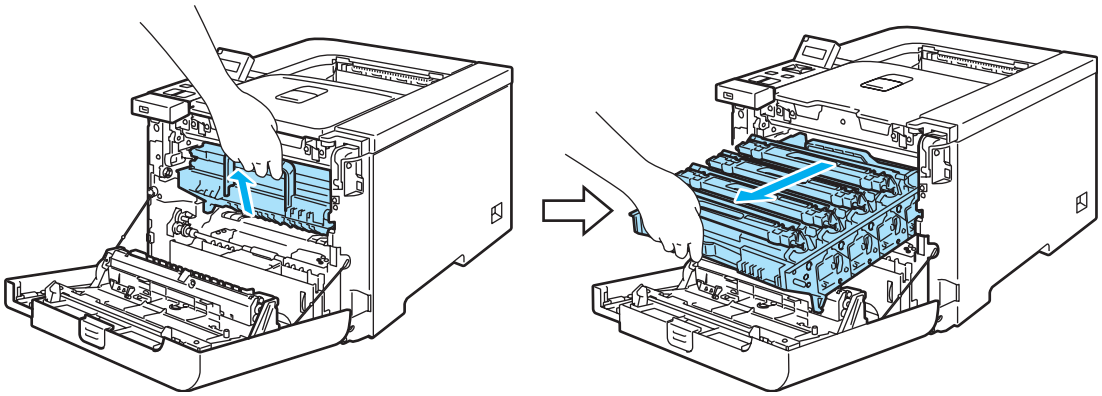

3 Release the gray lock lever (1) that is on the left side of the printer. Pull the drum unit completely out of the printer using the green handles on the drum unit.

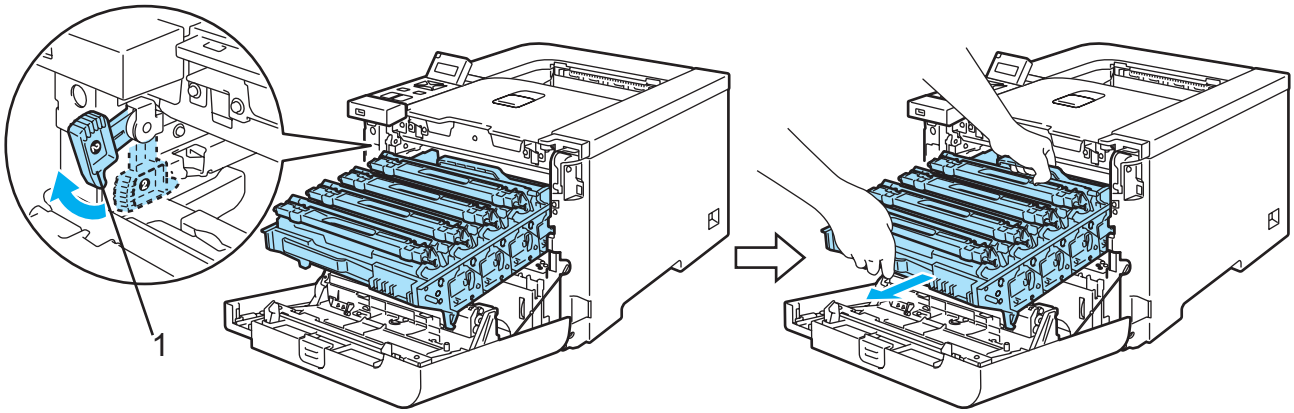

CAUTION

Hold the green handles of the drum unit when you carry it. DO NOT hold the sides of the drum unit.

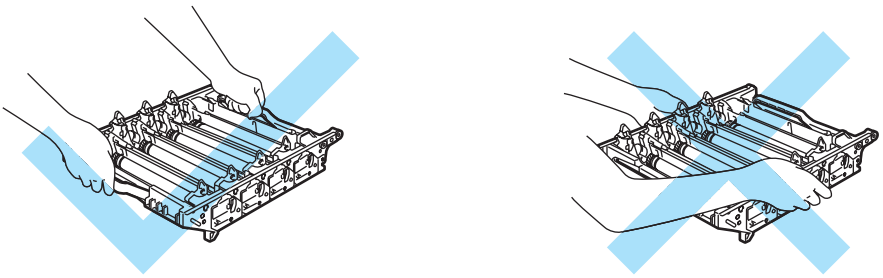

We recommend that you place the drum unit and belt unit on a clean, flat surface with a piece of disposable paper underneath it in case you accidentally spill or scatter toner.

If toner scatters on your hands or clothes, wipe or wash it off with cold water at once.

To prevent damage to the printer from static electricity, DO NOT touch the electrodes shown in the illustration.

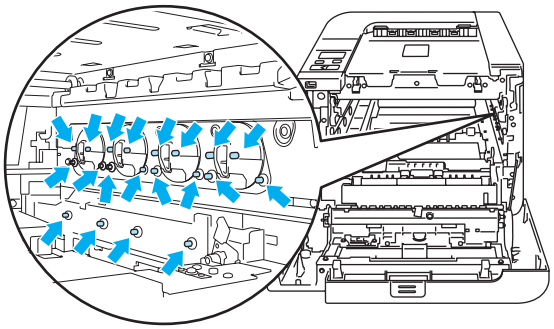

4 Hold the green parts of the belt unit with both hands and lift the belt unit up, then pull it out.

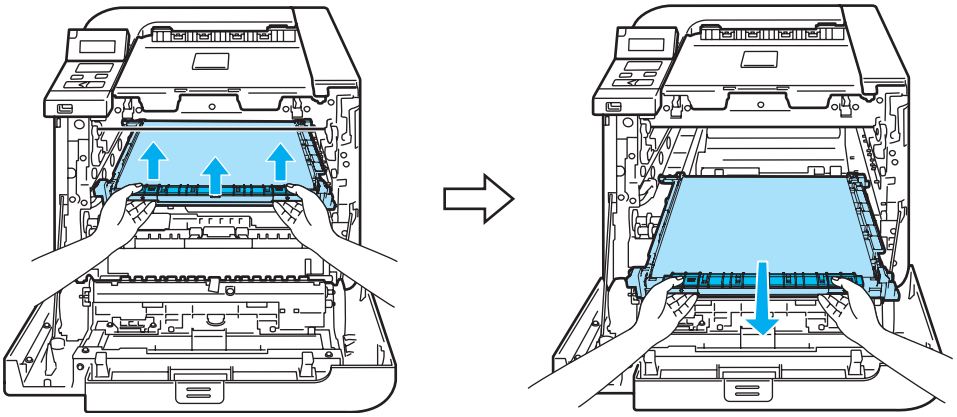

5 Remove the waste toner box from the printer using the green handle.

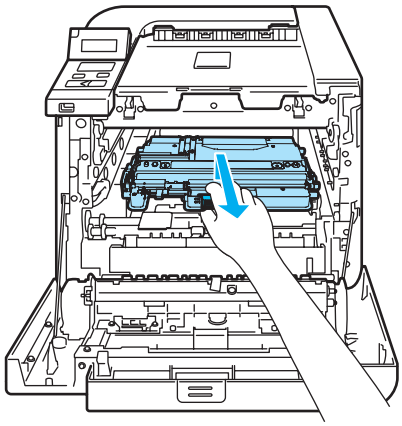

CAUTION

Handle the waste toner cartridges carefully in case you accidentally spill or scatter toner. If toner scatters on your hands or clothes, wipe or wash it off with cold water at once.

Note

Discard the used waste toner box according to local regulations, keeping it separate from domestic waste. If you have questions, call your local waste disposal office.

6 Unpack the new waste toner and put the new waste toner box in the printer using the green handle.

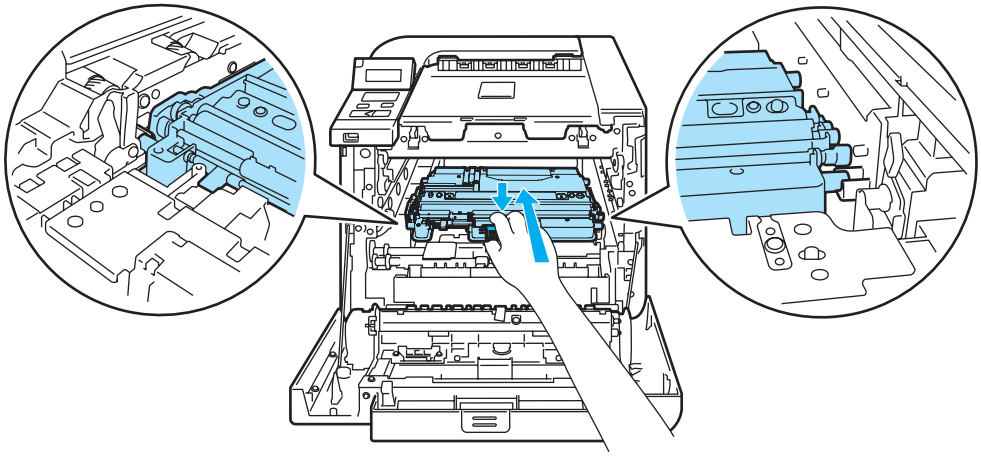

7 Put the belt unit back in the printer. Match the ↓ mark on the belt unit to the ↑ mark on the printer. Push down on the green area of the belt unit to lock it in place.

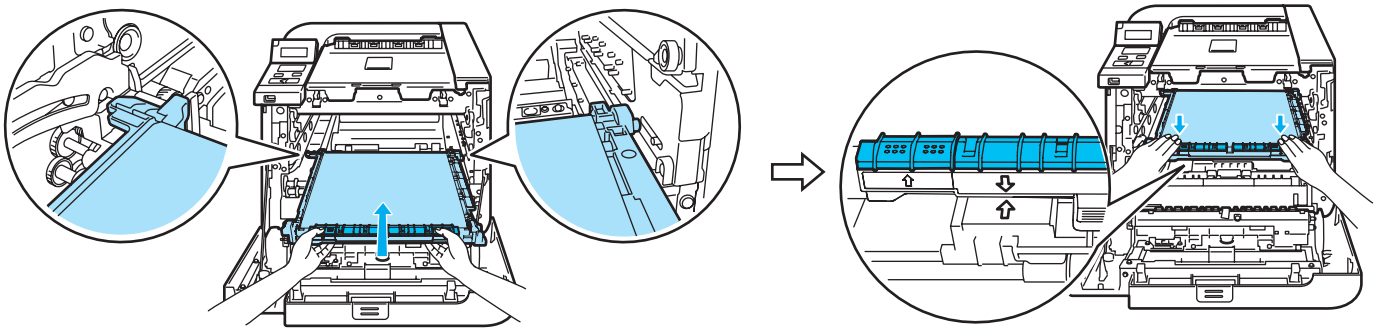

8 Put the drum unit back in the printer as follows.

1 Make sure that the gray lock lever (1) is in the up position and put the drum unit in the printer. Push down the gray lock lever (1).

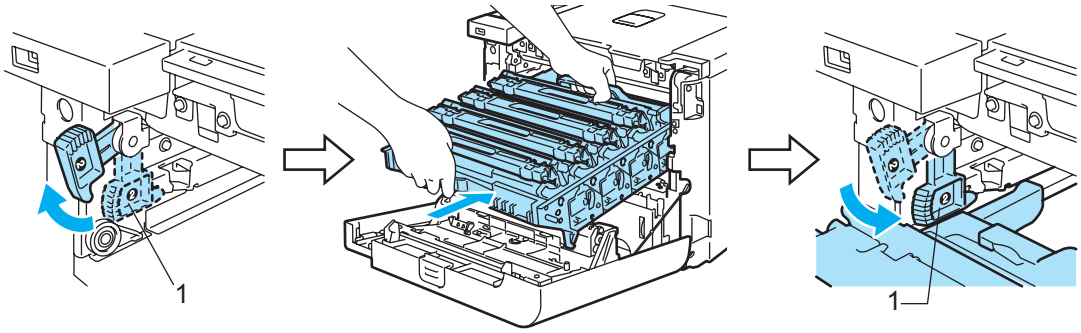

Note

When you put the drum unit in the printer, match the green guides (1) of the drum unit handle to the green arrows (2) on both sides of the machine.

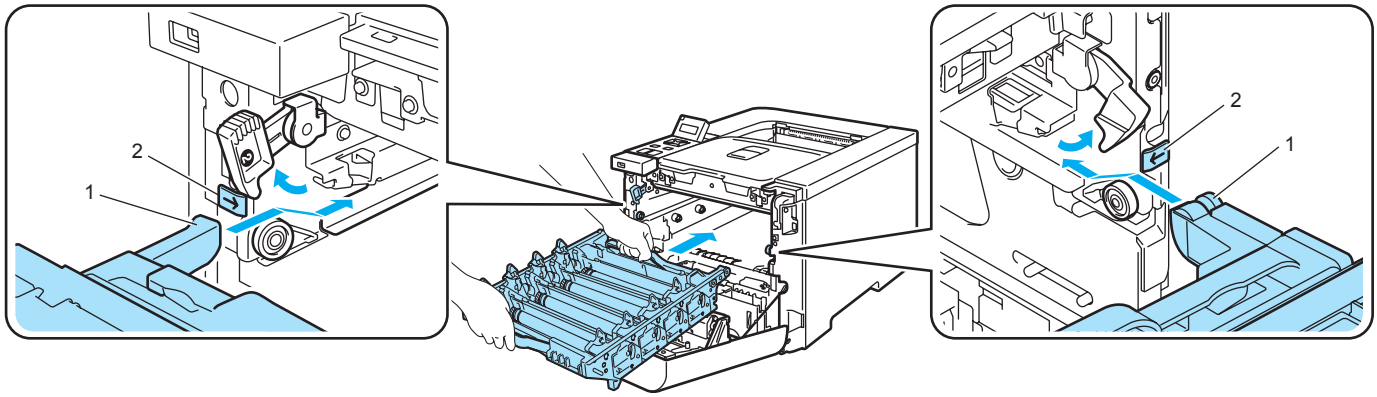

2 Push the drum unit in until it stops.

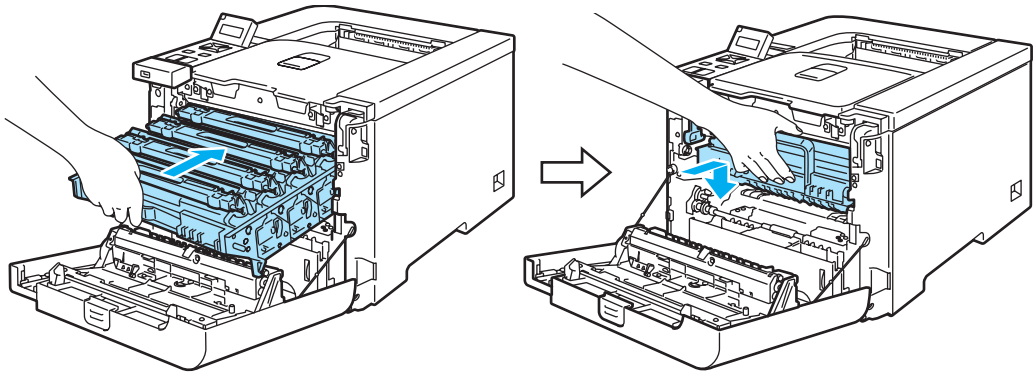

9 Close the front cover.

Cleaning

Clean the outside and inside of the printer regularly with a dry, lint-free cloth. When you replace the toner cartridge or the drum unit, make sure that you clean the inside of the printer. If printed pages are stained with toner, clean the inside of the printer with a dry, lint-free cloth.

Cleaning the outside of the printer

WARNING

Use neutral detergents. Cleaning with volatile liquids such as thinner or benzine will damage the surface of the printer.

DO NOT use cleaning materials that contain ammonia.

DO NOT use flammable substances near the printer. Doing this might cause a fire or electrical shock.

1. Turn off the printer power switch and then unplug the printer.

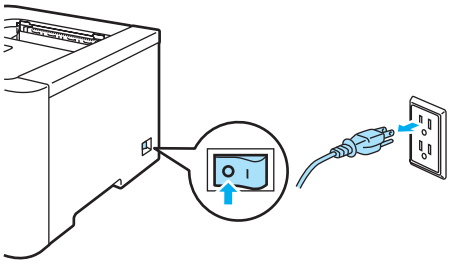

2. Pull the paper tray completely out of the printer.

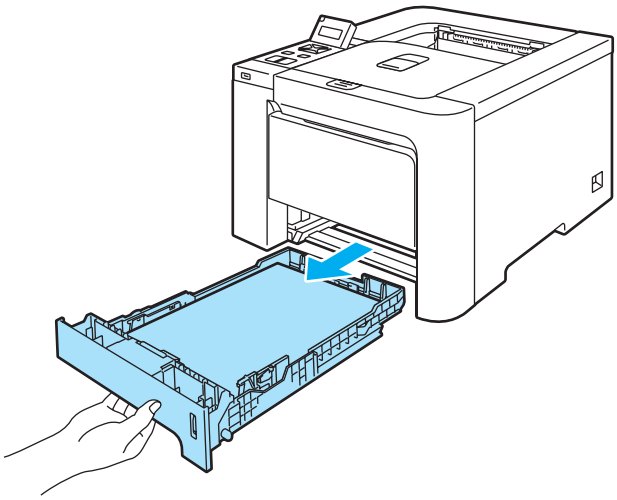

3 Wipe the outside of the printer with a dry, lint-free cloth to remove dust.

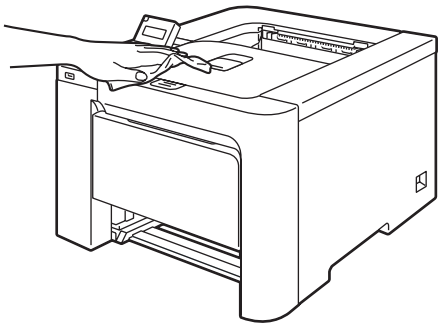

4 Remove anything that is stuck inside the paper tray.

5 Wipe the inside of the paper tray with a dry, lint-free cloth to remove dust.

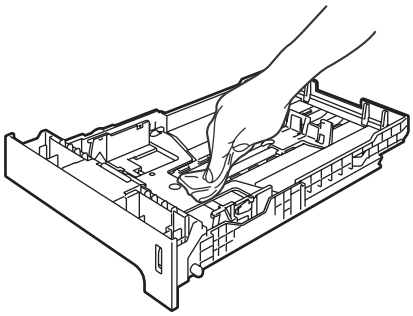

6 Put the paper tray back in the printer.

7 Plug the printer back in, and then turn on the power switch.

Cleaning the inside of the scanner windows

1 Turn off the printer power switch and then unplug the printer.

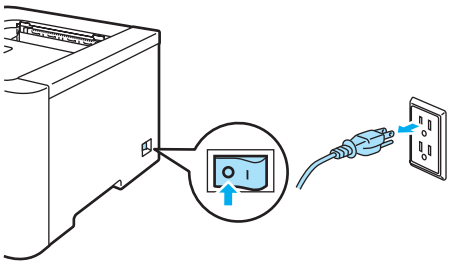

2 Press the front cover release button and then open the front cover.

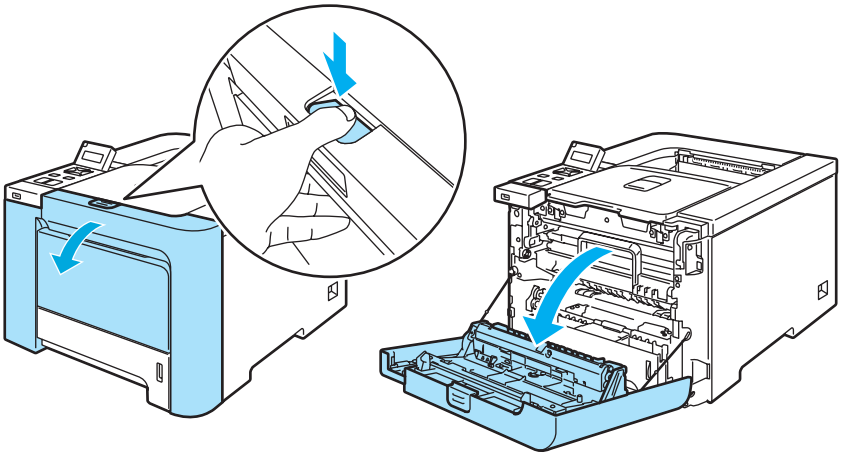

3 Hold the green handle of the drum unit. Lift the drum unit up and then pull it out until it stops.

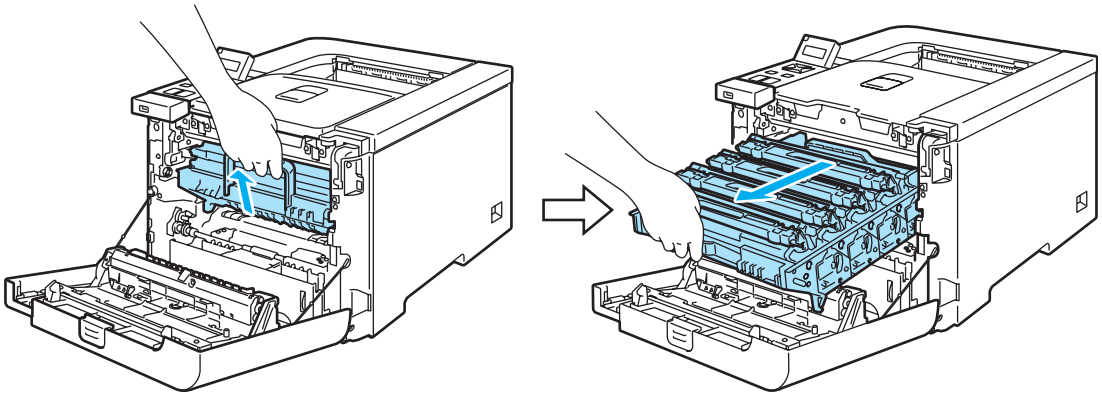

4 Release the gray lock lever (1) that is on the left side of the printer. Pull the drum unit completely out of the printer using the green handles on the drum unit.

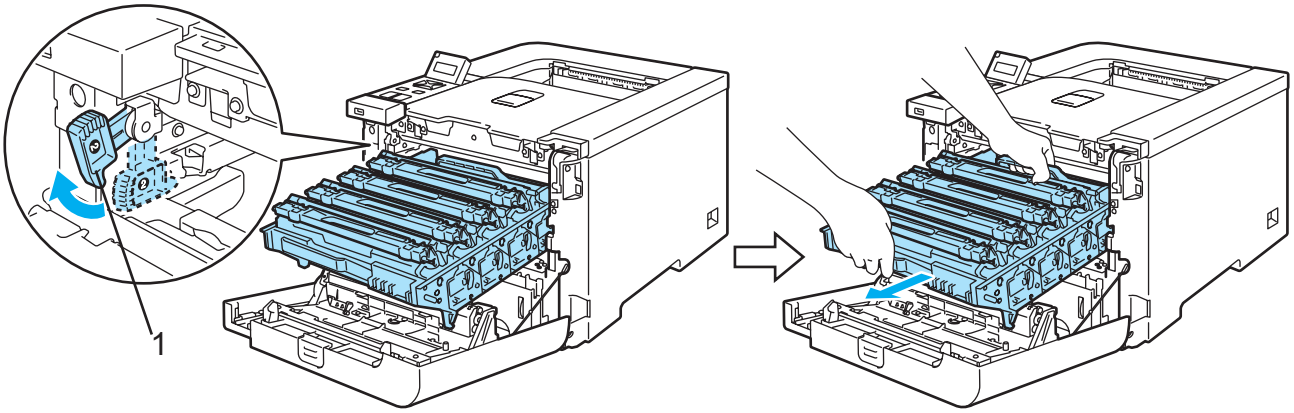

CAUTION

Hold the green handles of the drum unit when you carry it. DO NOT hold the sides of the drum unit.

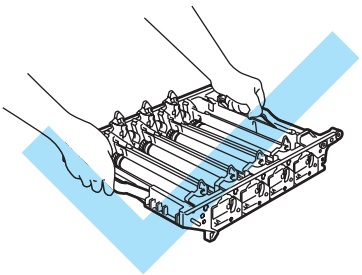

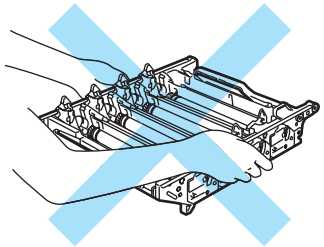

We recommend that you place the drum unit on a clean, flat surface with a piece of disposable paper underneath it in case you accidentally spill or scatter toner.

To prevent damage to the printer from static electricity, DO NOT touch the electrodes shown in the illustration.

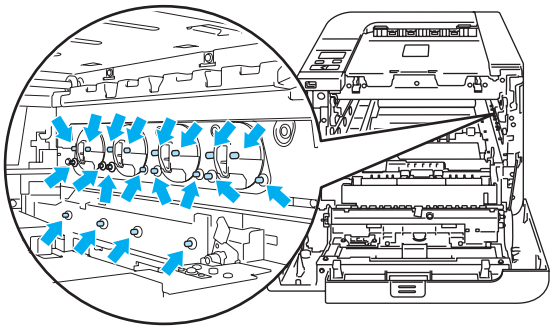

5 Wipe the scanner windows (1) with a dry, lint-free cloth.

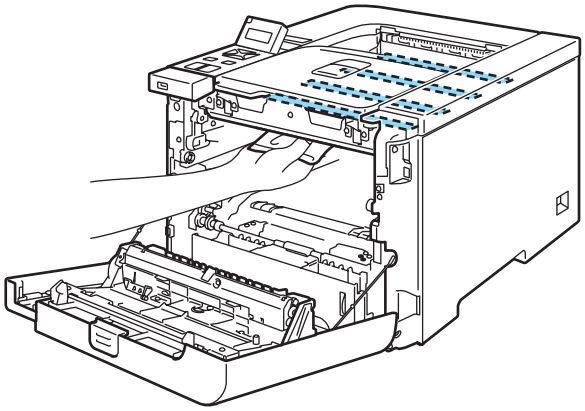

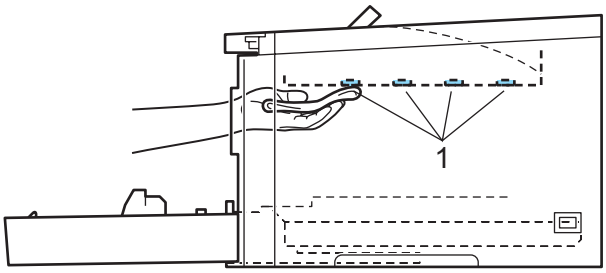

6 Put the drum unit back in the printer as follows.

1 Make sure that the gray lock lever (1) is in the up position and put the drum unit in the printer. Push down the gray lock lever (1).

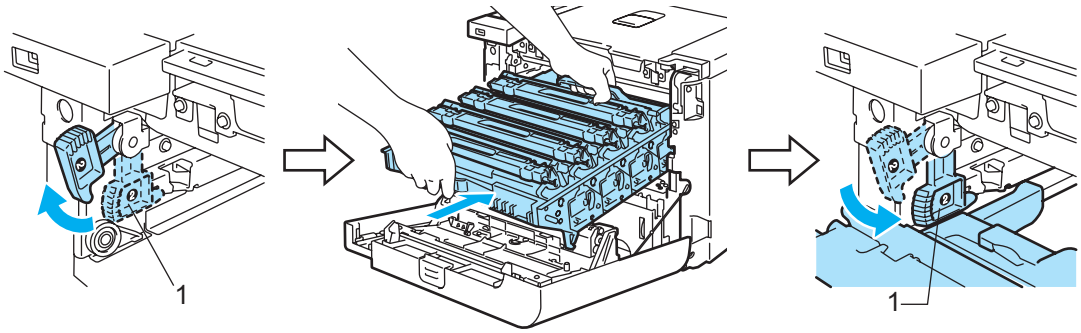

Note

When you put the drum unit in the printer, match the green guides (1) of the drum unit handle to the green arrows (2) on both sides of the machine.

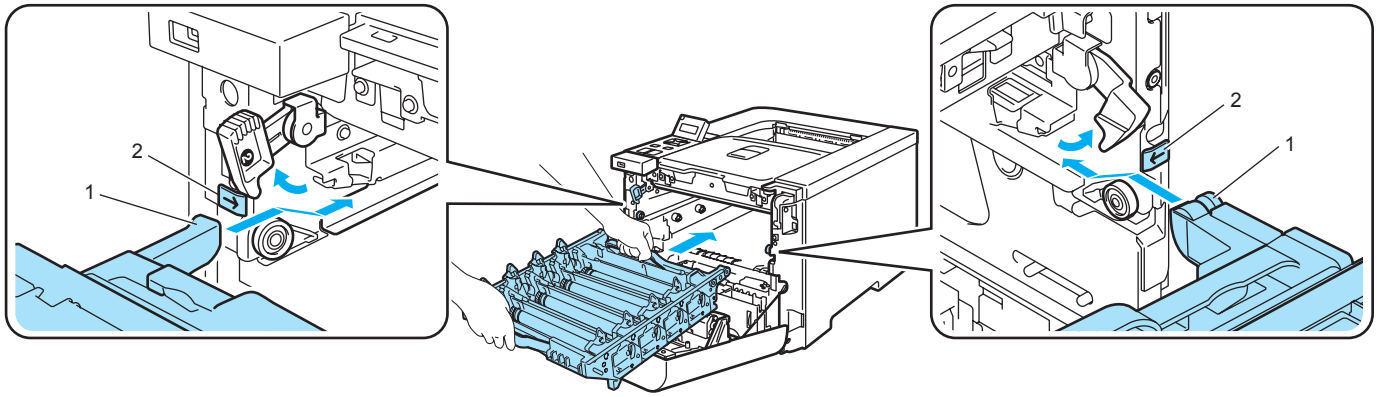

2 Push the drum unit in until it stops.

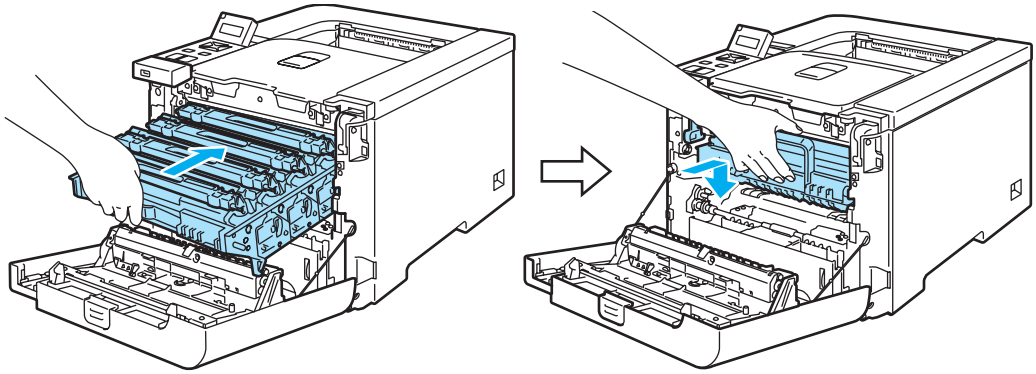

7 Close the front cover.

8 Plug the printer back in, and then turn on the power switch.

Cleaning the corona wires

If you have print quality problems, clean the corona wires as follows:

1. Turn off the printer power switch. Press the front cover release button and then open the front cover.

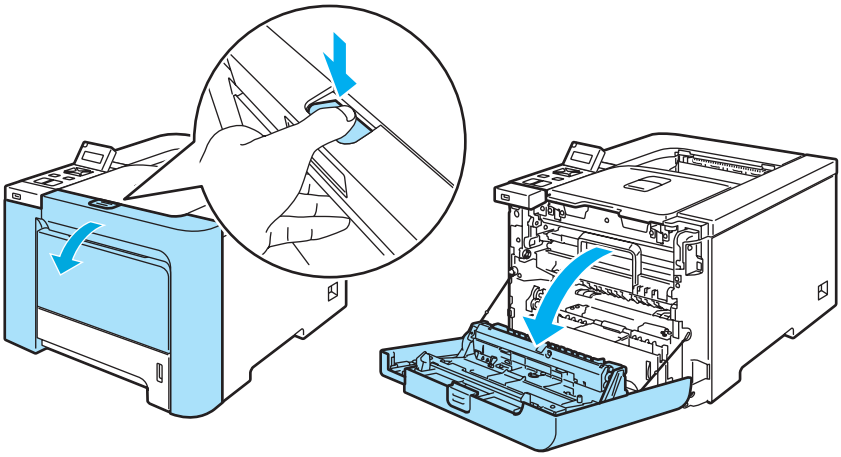

2. Hold the green handle of the drum unit. Lift the drum unit up and then pull it out until it stops.

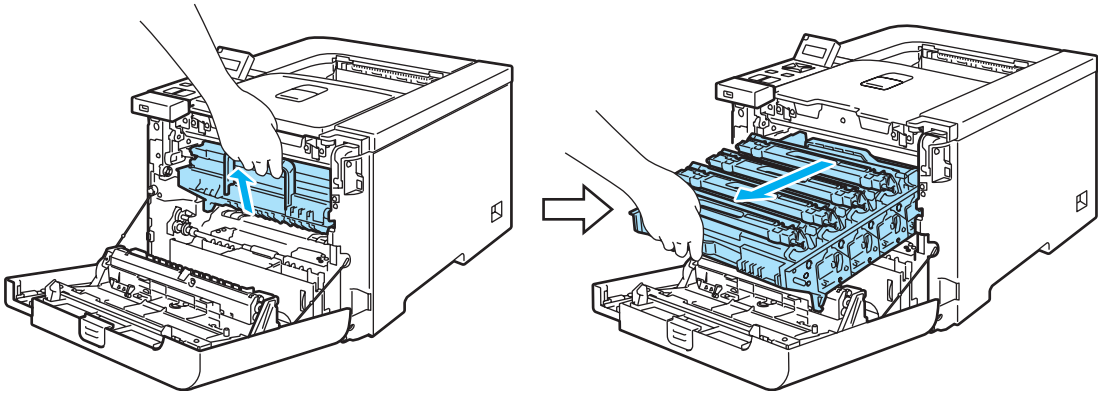

3. Hold the handle of the toner cartridge and pull it out of the drum unit. Repeat this for all the toner cartridges.

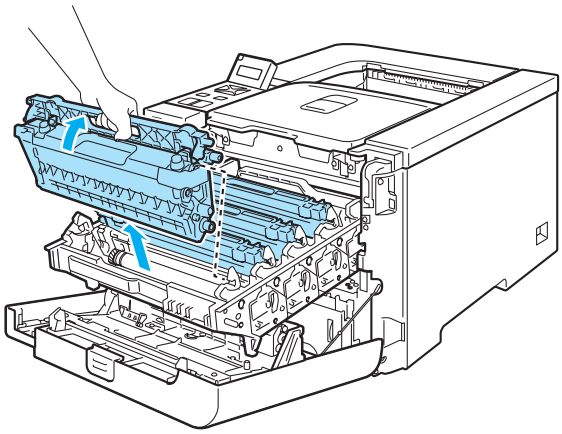

CAUTION

We recommend that you place the toner cartridge on a clean, flat surface with a piece of disposable paper underneath it in case you accidentally spill or scatter toner.

DO NOT put a toner cartridge into a fire. It could explode, resulting in injuries.

Handle the toner cartridge carefully. If toner scatters on your hands or clothes, wipe or wash it off with cold water at once.

To avoid print quality problems, DO NOT touch the shaded parts shown in the illustrations.

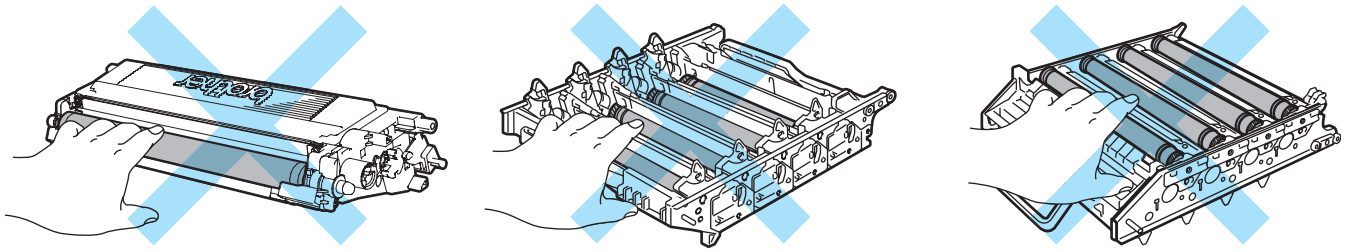

4 Push to release the latches of the white corona wire cover (1), and then open the cover.

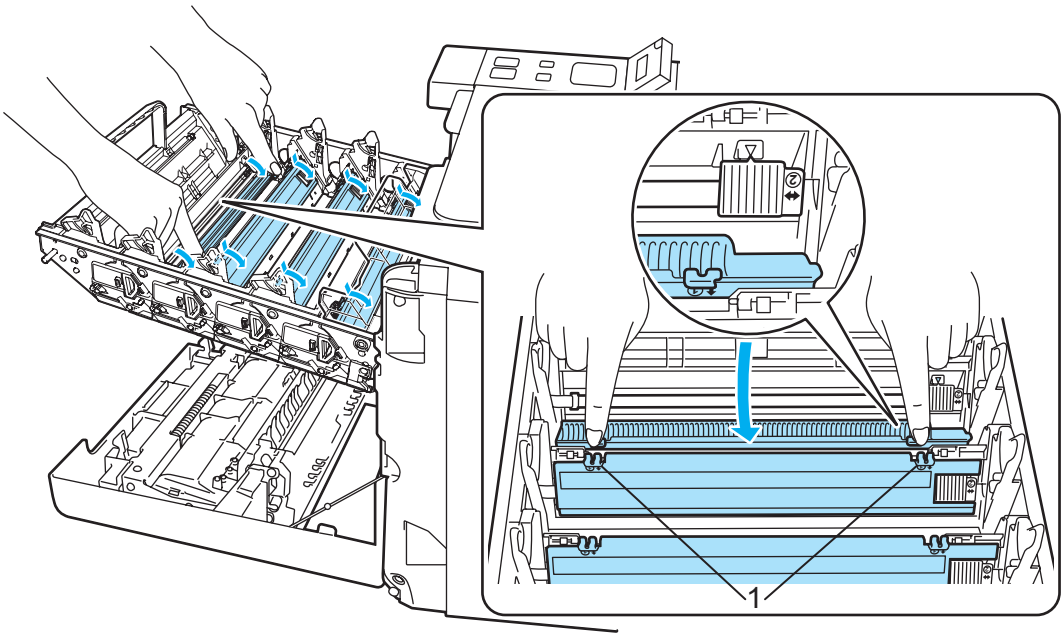

Note

We recommend that you clean the corona wire for each of the colors. If you want to clean only the corona wire of the color that caused the print quality problem, see the illustration below to identify the position of each of the corona wires.

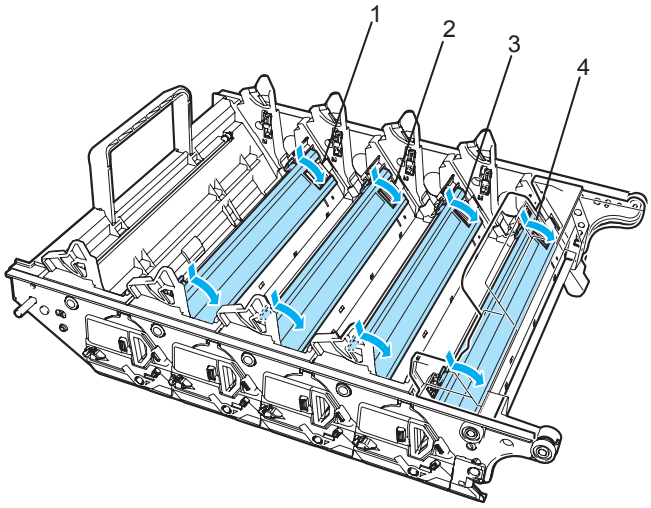

1 Corona wire cover for Black (K)
2 Corona wire cover for Yellow (Y)
3 Corona wire cover for Magenta (M)
4 Corona wire cover for Cyan (C)

5 Clean the corona wire inside the drum unit by gently sliding the green tab from left to right and right to left several times.

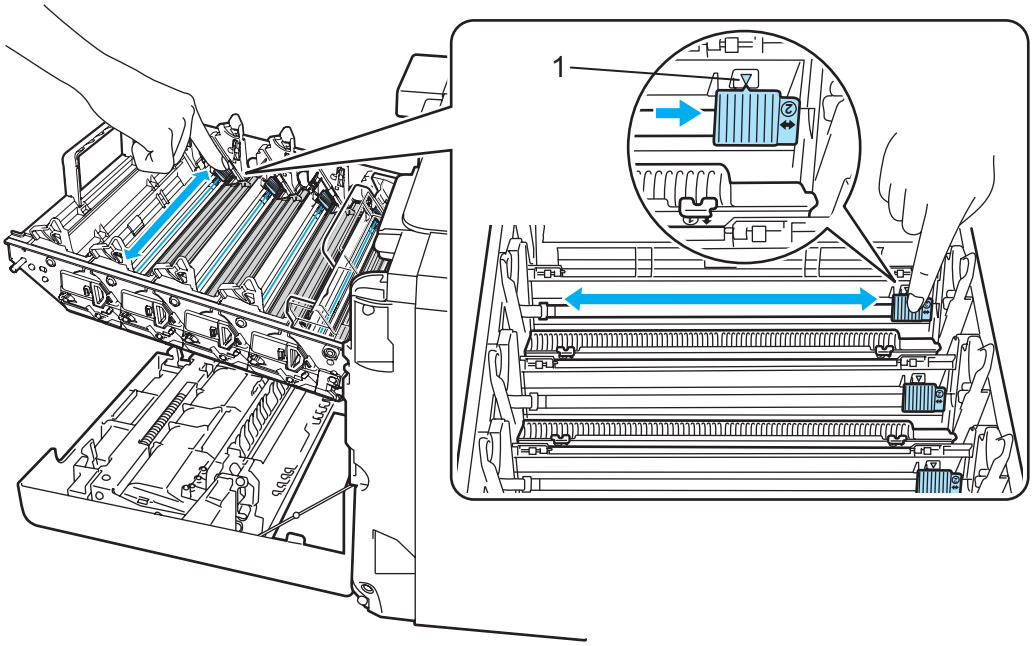

CAUTION

Be sure to return the tab to the home position ▲ (1). If you do not, printed pages may have a vertical stripe.

6 Close the corona wire cover.

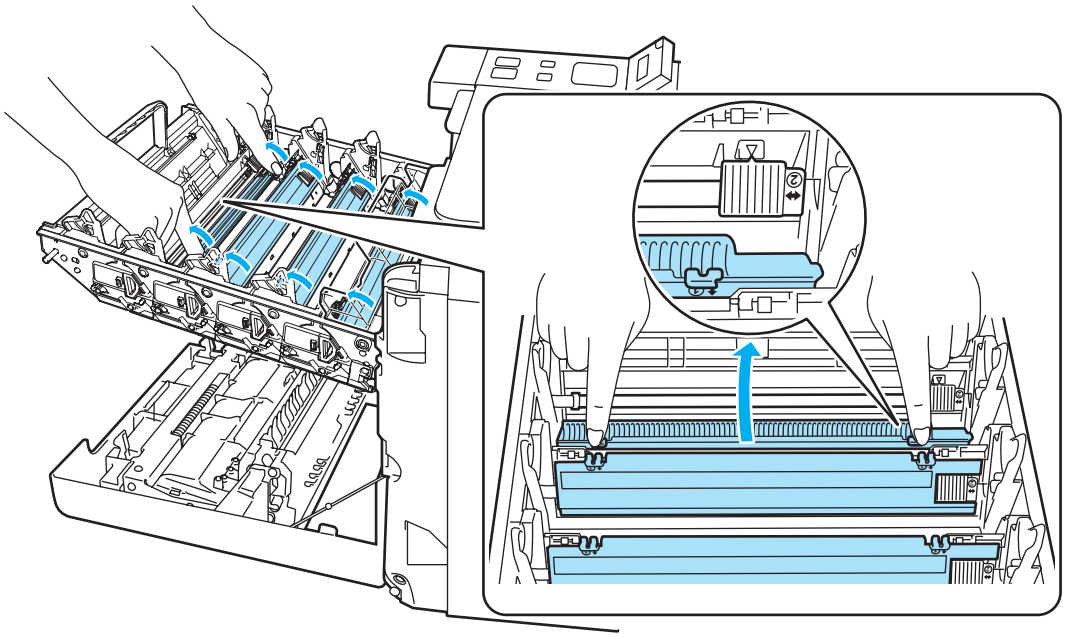

7 Repeat steps ❹ to ❻ to clean each of the remaining corona wires.

8 Hold the handle of the toner cartridge and slide the toner cartridge into the drum unit. Make sure that you match the toner cartridge color to the same color label on the drum unit, and make sure that you fold down the toner cartridge handle (1) once the toner cartridge is in place. Repeat this for all the toner cartridges.

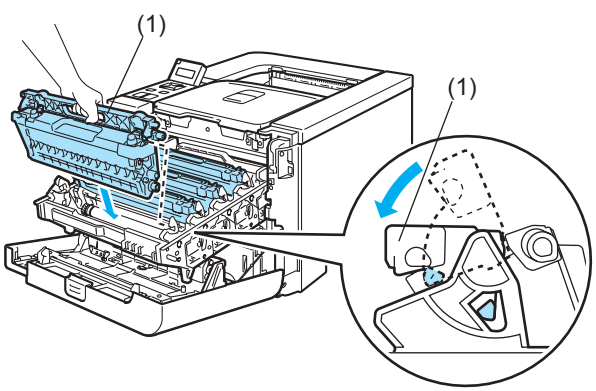

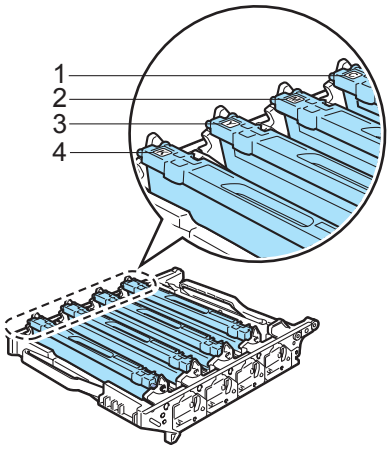

1.C - Cyan

2.M - Magenta

3.Y - Yellow

4.K - Black

9 Put the drum unit back in the printer.

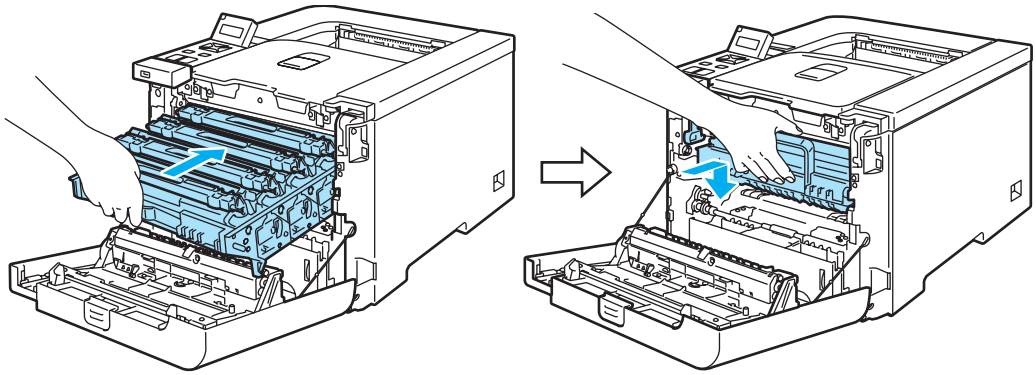

10 Close the front cover of the printer.

Cleaning the drum unit

If you have print quality problems, clean the drum unit as follows:

1. Pull the drum unit out from the printer and pull all the toner cartridge out from the drum unit. See steps ❶ to ❹ in *Replacing the drum unit* on page 103-105.

2. Turn the drum unit over by holding the green handle. Make sure that the drum unit gears (1) are on the left hand side.

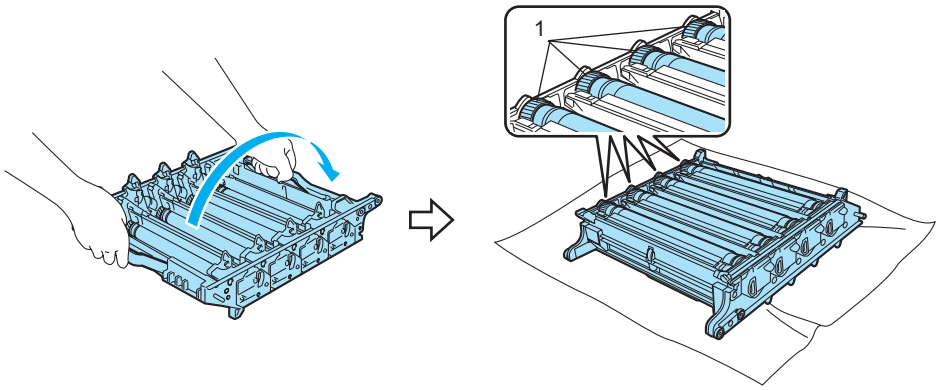

CAUTION

We recommend that you place the drum unit on a clean, flat surface with a piece of disposable paper underneath it in case you accidentally spill or scatter toner.

3. See the print sample to identify the color causing the problem. The color of the spots is the color of the drum you should clean. For example, if the spots are cyan, you should clean the drum for cyan. Put the print sample in front of the drum, and find the exact position of the poor print.

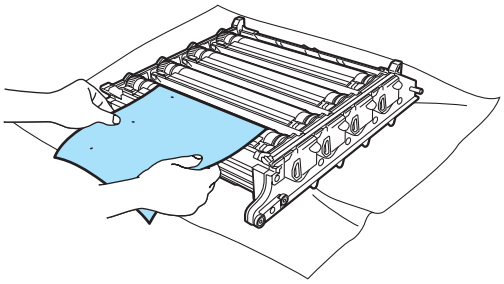

4 Turn the drum unit gear toward you by hand while looking at the surface of the drum (1).

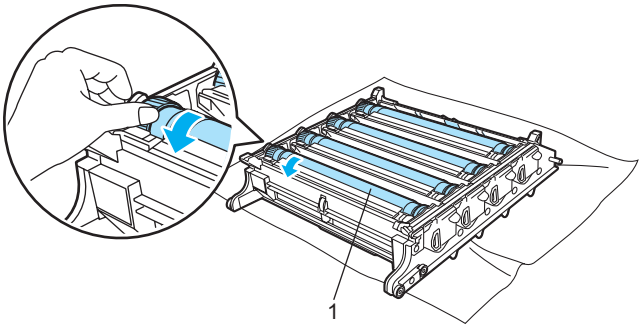

5 When you have found the mark on the drum that matches the print sample, wipe the surface of the drum gently with a cotton swab until the dust or paper powder on the surface comes off.

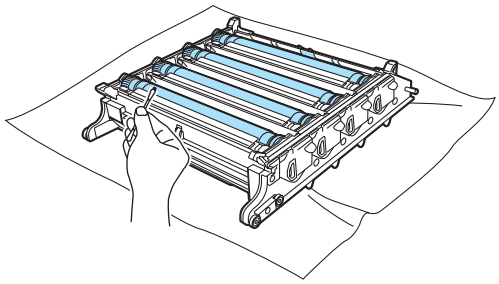

CAUTION

DO NOT clean the surface of the photosensitive drum with a sharp object.

6 Turn the drum unit gear toward you by hand to return it to the home position. The home position of each drum can be identified by matching the number on the drum unit gear to the same number on the side of the drum unit as shown in the illustration. Make sure that the number on each of the four drum unit gears matches the corresponding number on the side of the drum unit.

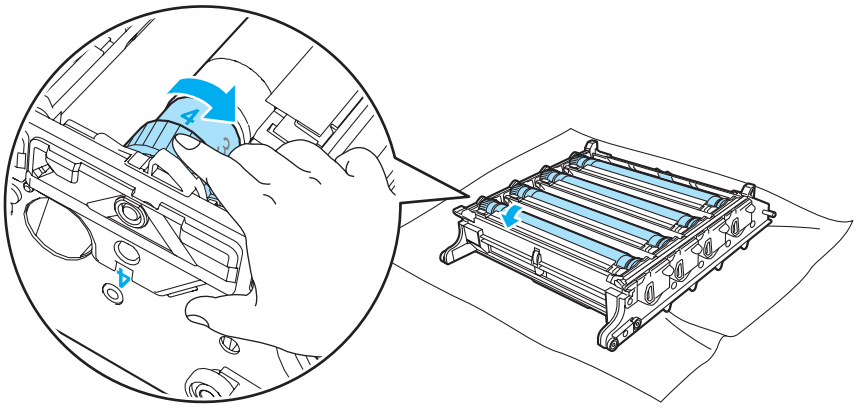

7 Using the green handles turn the drum unit back over.

8 Put all the toner cartridges back in the drum unit and put the drum unit in the printer. See steps ❻ to ❽ on page 106-107.

Shipping the printer

WARNING

Once your printer has been set up and used, we do not recommend that it be moved or shipped unless absolutely necessary.

Color laser printers are complex printing devices. Moving the printer or shipping it without properly removing the installed supplies can result in SEVERE damage to the printer. As a result, your printer may not operate properly afterwards.

If the printer must be shipped, see *Repacking Instructions* on page 132 for step-by-step instructions on how to properly prepare your printer for transport.

Failure to properly prepare the printer for shipping according to the instructions located at *Repacking Instructions* on page 132 or the supplied insertion sheet may VOID YOUR WARRANTY.

If for any reason you must move or ship your printer, carefully re-pack the printer in the original packing material to avoid any damage during transport. The Printer should also be adequately insured with the shipping company you choose.

Repacking Instructions

Make sure that you have the following parts for repacking:

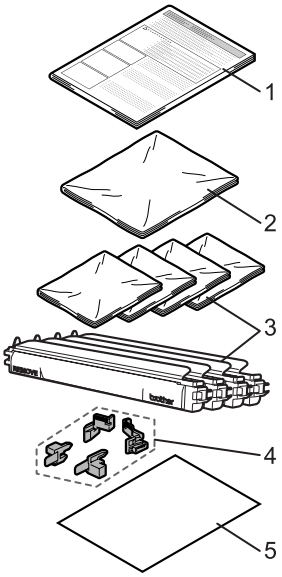

1. Insertion sheet for repacking
2. Plastic bag for the waste toner box
3. Plastic bags for the toner cartridge (4 pieces)
4. Orange packing material for locking the drum unit and the belt unit (4 pieces)
5. A piece of paper (letter or A4) to protect the belt unit (Supplied by the user)

Repacking the printer

WARNING

This printer is heavy and weights roughly 29.1 kg (64.2 lb). To prevent injuries when moving or lifting this printer, make sure to use at least two people. Be careful not to pinch your fingers when you put the printer down.

1. Turn off the power switch, and unplug all the cables from the printer.

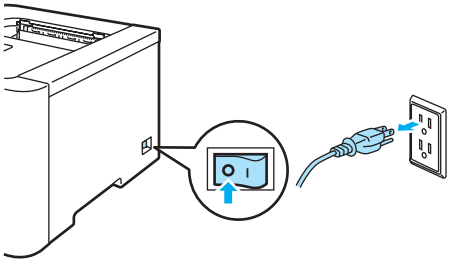

2. Press the front cover release button and then open the front cover.

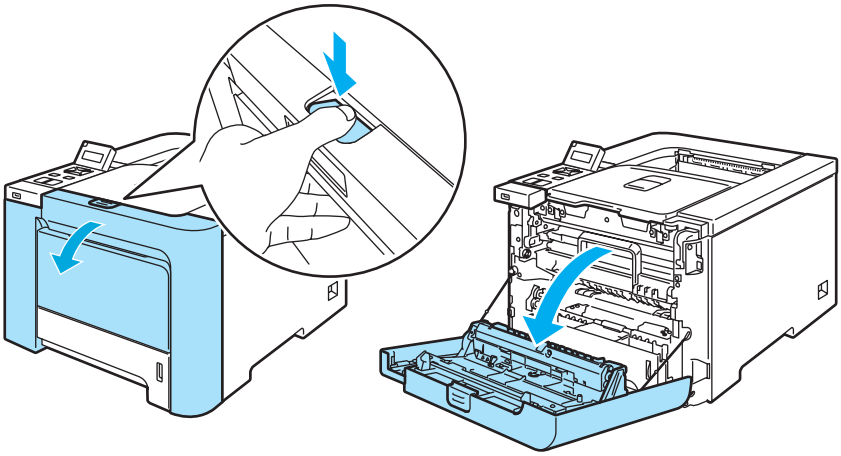

3. Hold the green handle of the drum unit. Lift the drum unit up and then pull it out until it stops.

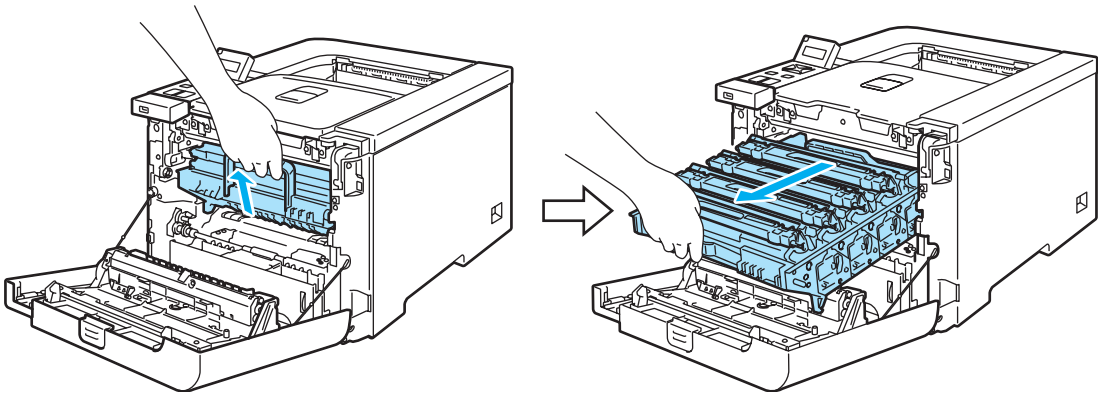

4 Release the gray lock lever (1) that is on the left side of the printer. Pull the drum unit completely out using the green handles on the drum unit.

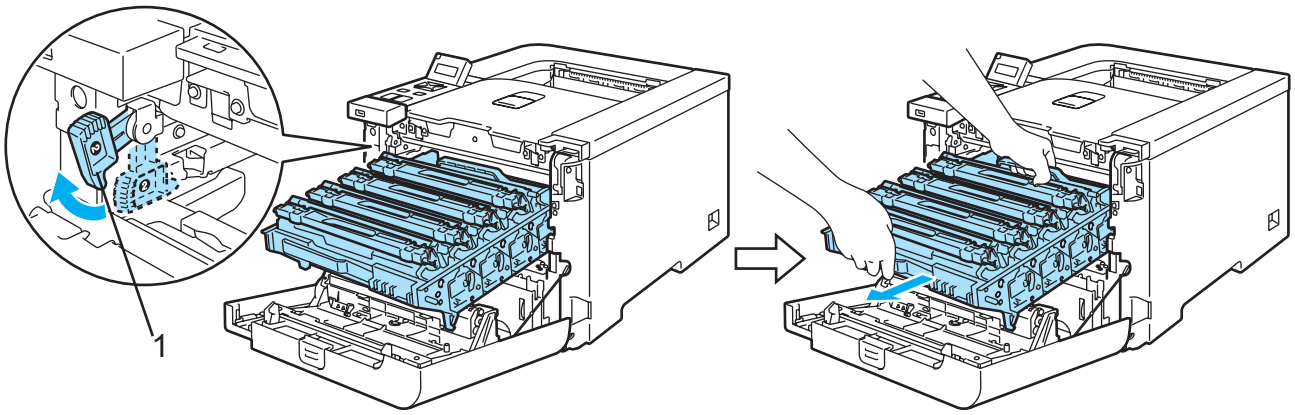

CAUTION

Hold the green handles of the drum unit when you carry it. DO NOT hold the sides of the drum unit.

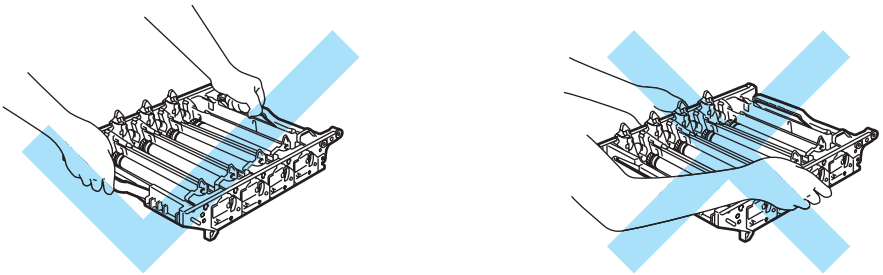

We recommend that you place the drum unit on a clean, flat surface with a piece of disposable paper underneath it in case you accidentally spill or scatter toner.

To prevent damage to the printer from static electricity, DO NOT touch the electrodes shown in the illustration.

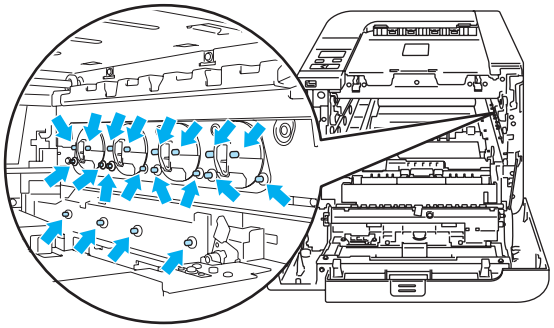

5 Hold the handle of the toner cartridge and pull it out of the drum unit. Repeat this for all the toner cartridges.

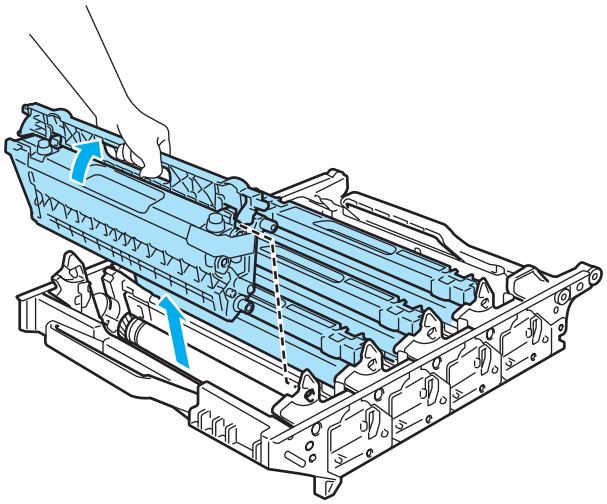

CAUTION

To avoid print quality problems, DO NOT touch the shaded parts shown in the illustrations.

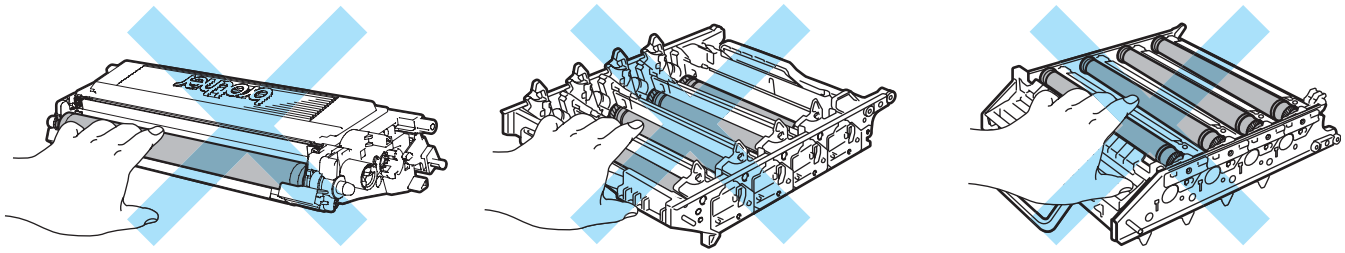

6 Attach the original orange protective cover to each of the toner cartridges. Place each of the toner cartridges into the plastic bag included in the carton. Repeat steps ❺ to ❻ for all the toner cartridges.

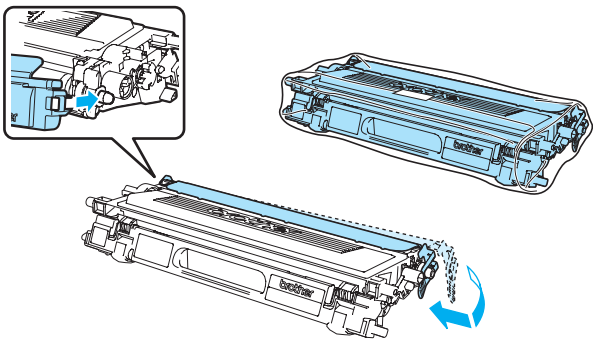

7 Hold the green parts of the belt unit with both hands and lift the belt unit up, then pull it out.

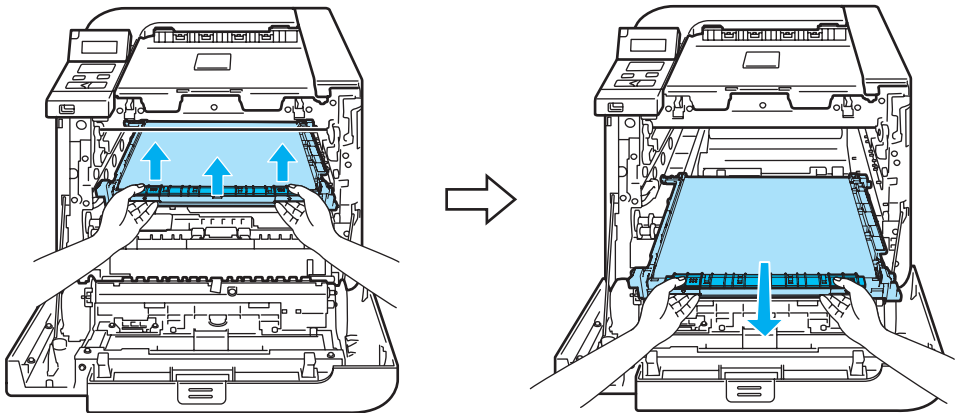

Note

We recommend that you put the belt unit on a clean, flat surface with a piece of disposable paper underneath it in case you accidentally spill or scatter toner.

8 Remove the waste toner box from the printer using the green handle and place it into the plastic bag included in the carton.

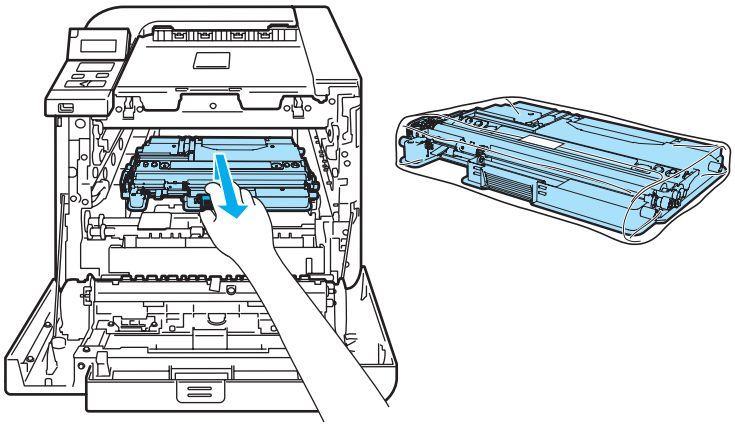

9 Put the belt unit back in the printer. Match the ↓ mark on the belt unit to the ↑ mark on the printer. Push down on the green area of the belt unit to lock it in place.

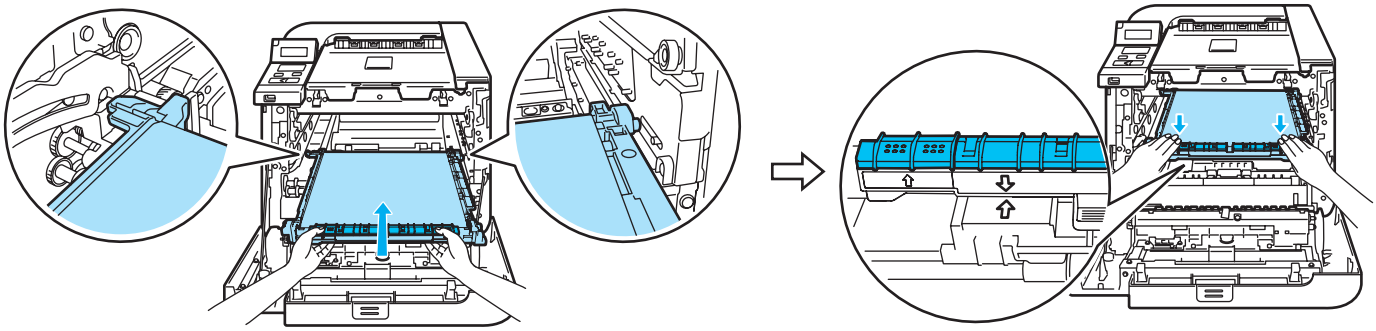

10 Insert the original orange packing material for locking the belt unit as shown in the illustration

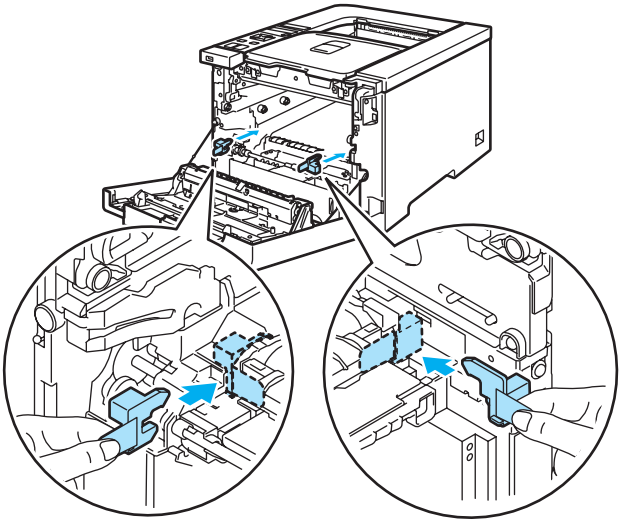

11 Put a piece of paper (letter or A4) on the belt unit to prevent damage to the belt unit.

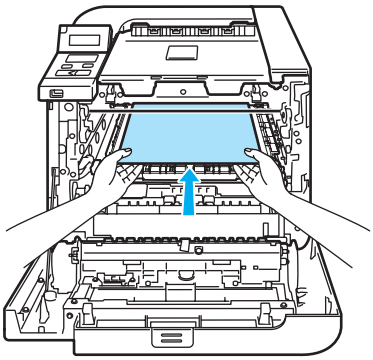

12 Make sure that the gray lock lever (1) is in the up position and put the drum unit in the printer. Push down the gray lock lever (1).

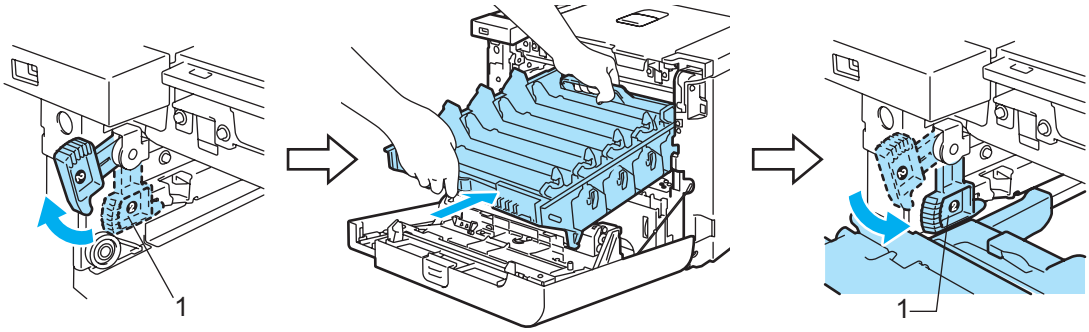

13 Push the drum unit in until it stops.

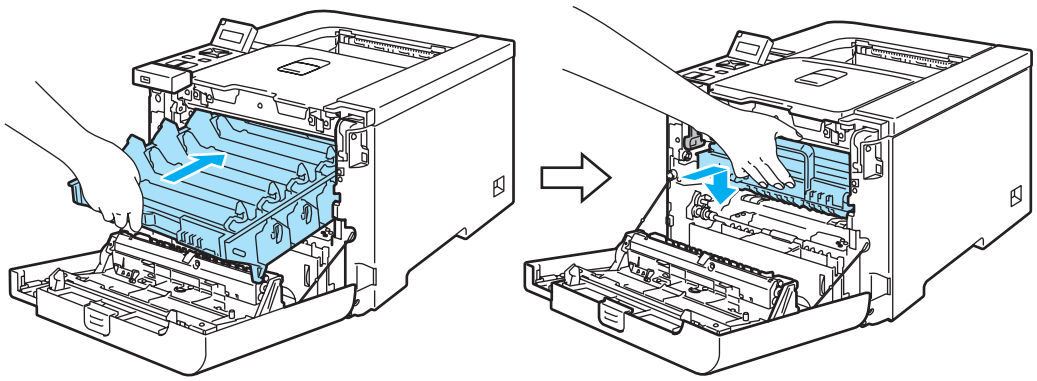

14 Insert the original orange packing material for the drum unit as shown in the illustration, and then close the front cover.

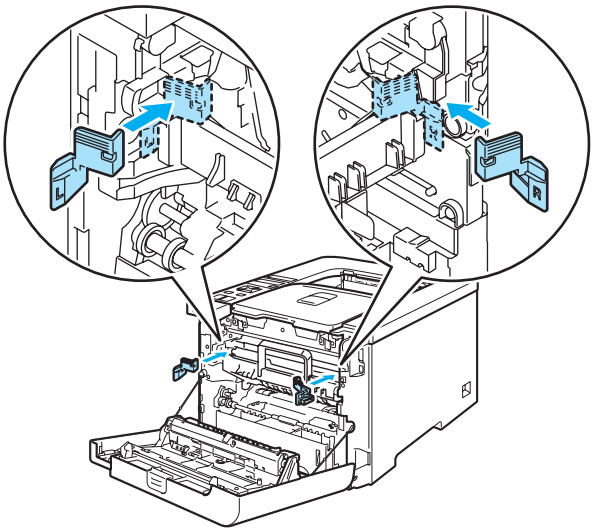

15 Two people should place the printer into the plastic bag and put the printer and the Styrofoam pieces into the carton. Match the front side of the printer to the “FRONT” mark (1) on the Styrofoam pieces. Put the Styrofoam piece for the toner cartridges (2) on top of the printer.

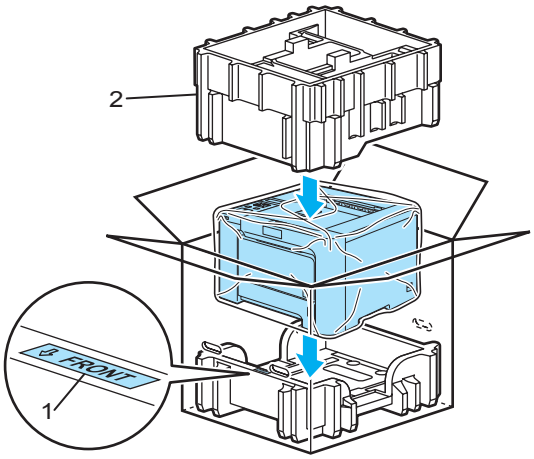

16 Put the toner cartridges into the Styrofoam piece.

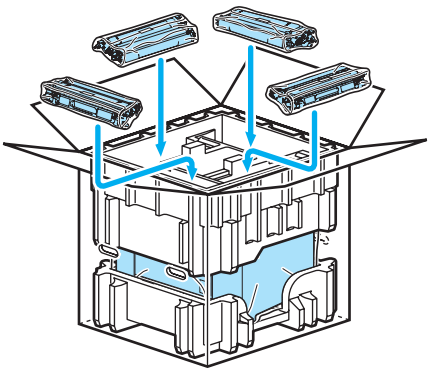

17 Put the two carton trays (1) (2) on the top and put the waste toner box in the tray placed towards on the front side of the printer (1).

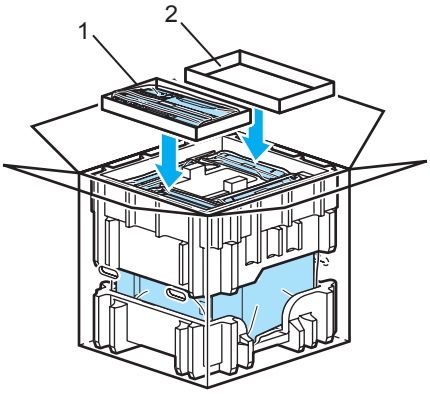

18 Close the carton and tape it shut.

7 Troubleshooting

You can correct most problems by yourself. If you need additional help, the Brother Solutions Center offers the latest FAQs and troubleshooting tips. Visit us at http://solutions.brother.com.

Identifying your problem

First, check the following:

- The AC power cord is connected properly and the printer is turned on.
- All of the protective parts have been removed.
- The toner cartridges and drum unit are installed properly.
- The front and back covers are fully closed.
- Paper is inserted properly in the paper tray.
- The interface cable is securely connected to the printer and the computer.
- The correct driver for the printer has been chosen and is installed.
- The computer is set up to connect to the correct printer port.

Printer does not print:

If you did not solve your problem with the above checks, identify your problem and then go to the page suggested below.

- **LCD Messages**

  (See *LCD messages* on page 141.)
- **Paper handling**

  (See *Paper handling* on page 144 and *Paper jams and how to clear them* on page 145.)
- **Other problems**

  (See *Other problems* on page 166.)

Pages are printed, but there are problems with:

- **Print quality**

  (See *Improving the print quality* on page 158.)
- **Printout is incorrect**

  (See *Solving print problems* on page 166.)

LCD messages

If any problems occur, the printer automatically stops printing, diagnoses the problem, and displays the resulting message on the LCD to alert you. Take the appropriate action, referring to the following tables. If you cannot clear the problem, call the dealer you bought the printer from or Brother Customer Service.

Note

The LCD names for the paper trays are as follows.

- Standard paper tray: `Tray1`
- Multi-purpose tray: `MP`
- Optional Lower tray(HL-4050CDN only): `Tray2`

Error messages

Error message	Action
`Access Error`	The USB device was removed while data was processing. Press **Cancel**. Reinsert the USB device and try to print with Direct Print or PictBridge.
`Cartridge Error`	Pull out the drum unit. Take out the toner cartridge that is indicated on the second line of LCD and put it back into the printer again.
`Cover is Open`	Close the cover that is indicated on the second line of LCD.
`DIMM Error`	Turn off the printer. Re-install the DIMM correctly. Wait a few seconds, and then turn it on again. If this error message appears again, replace the DIMM with a new one. See *Installing extra memory* on page 92.
`Drum Error`	Clean the corona wires. (See *Cleaning the corona wires* on page 125.)
`EL Error`	Open the front cover and close it again.
`Fuser Error`	Turn the power switch off, wait a few seconds and then turn it again. Leave the printer for 15 minutes with the power on.
`Jam XXX`	Carefully pull out the jammed paper from the area shown in *Paper jams and how to clear them* on page 145.
`Low Temperature`	Allow the machine to warm up.
`Manual Feed`	Put the same size of paper in the MP tray as is shown on the LCD. If the printer is 'paused', press **Go**.
`No Belt Unit`	Install the belt unit. (See *Belt unit* on page 109.)
`No Drum Unit`	Install the drum unit. (See *Drum unit* on page 103)
`No Paper`	Put paper in the indicated empty tray.
`No Tray`	Put the tray1 in the printer.
`No Waste Toner`	Install the Waste Toner Box. (See *Waste toner box* on page 114.)
`Out Of Memory`	Add more memory. (See *Installing extra memory* on page 92.)
`Size Error`	Check the printer driver setting and put the correct sized paper in tray that is indicated on the second line of LCD. (See *About paper* on page 6.)
`Size Error DX`	You can only use A4, A4 Long size for duplex printing. Check the printer driver setting. Put the correct size of paper, which is indicated on the second line of the LCD, in the tray. (See *About paper* on page 6.)

Error messages (continued)

Error message	Action
Size Mismatch	Put the same size paper in the paper tray or MP tray that is selected in the printer driver, and then press **Go**, or select the size of paper you set in the Tray Size setting from the control panel.
Toner Life End	It is time to replace the toner cartridge. (See *Replacing a toner cartridge* on page 96.)
Tray2 Error	Take out Tray2 and push it back in firmly.
Unusable Device	Remove the USB flash memory drive from USB Direct Interface.
Waste Toner Full	It is time to replace the Waste Toner Box. (See *Replacing the waste toner box* on page 114.)

Error messages in Color Correction

Call service message	Action
Calibrate <Second line of the LCD> Calibration failed. See Troubleshooting chapter in User's guide.	■ Turn off the printer. Wait a few seconds, then turn it on again. ■ Put in a new drum unit. (See *Replacing the drum unit* on page 103.) ■ Put in a new belt unit. (See *Replacing the belt unit* on page 109.) ■ Put in a waste toner box. (See *Replacing the waste toner box* on page 114.) ■ If the problem continues, call your dealer or Brother Customer Service.
Registration <Second line of the LCD> Registration failed. See Troubleshooting chapter in User's guide.	■ Turn off the printer. Wait a few seconds, then turn it on again. ■ Put in a new belt unit. (See *Replacing the belt unit* on page 109.) ■ If the problem continues, call your dealer or Brother Customer Service.

Maintenance messages

Error message	Meaning	Action
■■□■	The four ■ marks (also □, □=blinking ■) indicate the Black (K), Yellow (Y), Magenta (M), Cyan (C) toner cartridges from left to right. When the ■ mark blinks (shown as □ in left), the indicated color toner is nearly empty. When the toner becomes empty, the ■ indicator disappears completely.	Buy a new toner cartridge before you get a Toner Life End message.
Change Belt Unit	It is time to replace the belt unit.	Replace the belt unit.
Change PF KitXX	It is time to replace the paper feeding kit XX.	Replace the paper feeding kit.
Drum End Soon	It is time to replace the drum unit.	Replace the drum unit. (See *Replacing the drum unit* on page 103.)
Fuser Unit End	It is time to replace the fuser unit.	Replace the fuser unit.
Laser Unit End	It is time to replace the laser unit.	Replace the laser unit.

Maintenance messages (continued)

Error message	Meaning	Action
Waste Toner Soon	The waste toner box is almost full.	Be ready to replace the waste toner box. (See *Replacing the waste toner box* on page 114.)

Call service messages

Call service message	Action
Print Unable ##	Turn off the printer. Wait a few seconds, then turn it on again. If this does not clear the problem, call your dealer or a Brother Customer Service.

Paper handling

First, make sure that you are using paper that meets Brother recommended paper specifications. (See *About paper* on page 6.)

Problem	Recommendation
The printer does not feed paper.	■ If there is paper in the paper tray, make sure it is straight. If the paper is curled, straighten it before printing. Sometimes it is helpful to remove the paper. Turn the stack over and put it back in the paper tray. ■ Reduce the amount of paper in the paper tray, and then try again. ■ Make sure that manual feed mode is not chosen in the printer driver.
The printer does not feed paper from the MP tray.	■ Fan the paper well and put it back in firmly. ■ Make sure that you have chosen the **MP Tray** in the Paper Source of the printer driver.
The printer does not feed envelopes.	■ The printer can feed envelopes from the multi-purpose tray. You must set up your application to print on the size of envelopes you are using. This is usually done in the page setup or document setup menu of your software. (See your application manual.)
A paper jam has occurred.	■ Clear the jammed paper. (See *Paper jams and how to clear them* on page 145.)
The printer does not print.	■ Make sure that the cable is connected to the printer. ■ Make sure that you have chosen the correct printer driver.
When printing on normal paper, it creases.	■ Change the printer driver setting in **Media Type** to a thin setting.
The paper slides off the top output tray.	■ Pull out and lift up the output tray support flap. 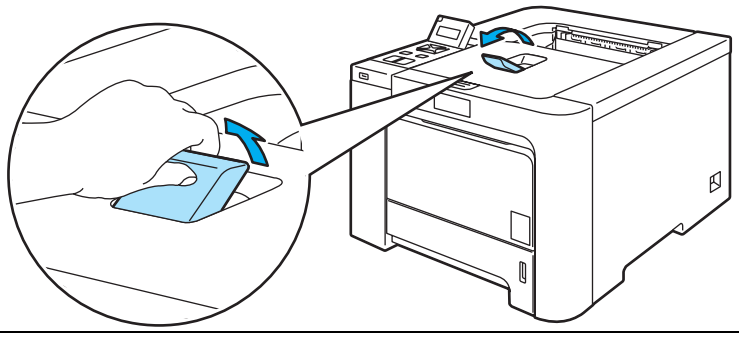

Paper jams and how to clear them

If paper jams inside the printer, the printer will stop. One of the following LCD messages will appear to tell you where to find the jammed paper.

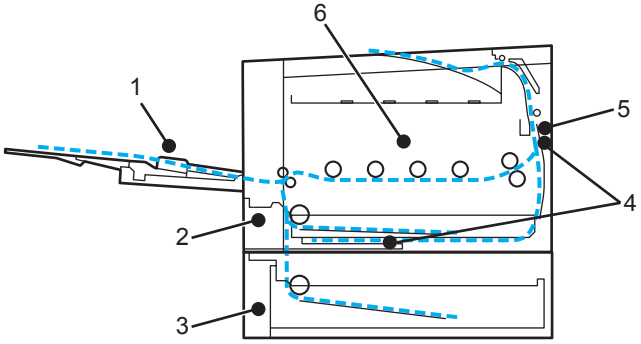

- `Jam MP Tray` (1)

  Paper jam in the MP tray. (See page 146.)

- `Jam Tray 1` (2)

  Paper jam in the standard paper tray (Tray 1). (See page 146.)

- `Jam Tray 2` (3)

  Paper jam in the lower tray (Tray 2). (See page 146.)

- `Jam Duplex` (4)

  Paper jam underneath the standard paper tray (Tray 1) or in the fuser unit. (See page 148.)

- `Jam Rear` (5)

  Paper jam where the paper comes out of the printer. (See page 151.)

- `Jam Inside` (6)

  Paper jam inside the printer. (See page 154.)

If the error message still appears on the LCD after you remove the jammed paper, there may be more paper jammed somewhere else. Check the printer thoroughly.

After you have removed all the jammed paper, open the front cover and then close it again to start printing.

Note

Always remove all paper from the paper tray and straighten the stack when you add new paper. This helps prevent multiple sheets of paper from feeding through the printer at one time and prevents paper jams.

Jam MP Tray (paper jam in the MP tray)

```
Jam MP Tray
```

If a paper jam occurs inside the MP tray, follow these steps:

1. Remove the paper from the MP tray.
2. Remove any jammed paper from in and around the MP Tray.
3. Fan the paper stack, and then put it back in the MP tray.

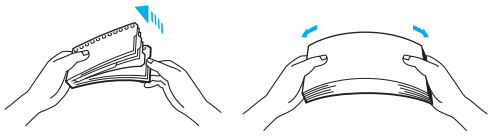

4. When loading paper in the MP tray, make sure that the paper stays under the maximum paper height guides on both sides of the tray.
5. If the printer does not automatically start printing, press **Go**.

Jam Tray 1 / Tray 2 (paper jam inside the paper tray)

Note

The LCD names for the paper trays are as follows.

- Standard paper tray: `Tray1`
- Optional Lower tray: `Tray2`

```
Jam Tray1
```

```
Jam Tray2
```

If a paper jam occurs inside the paper tray, follow these steps:

1. Pull the paper tray completely out of the printer.

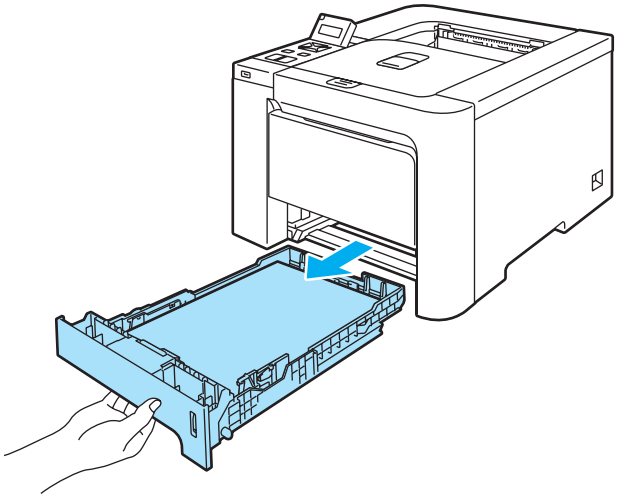

2. Use both hands to slowly pull out the jammed paper.

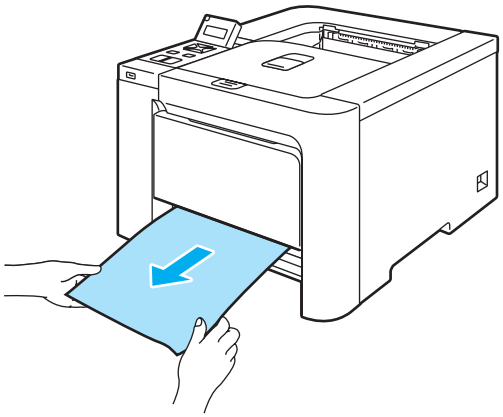

3. Put paper below the maximum paper mark. While pressing the green paper-guide release lever, slide the paper guides to fit the paper size. Make sure that the guides are firmly in the slots.
4. Put the paper tray firmly back in the printer.
5. Open the front cover and close it to resume printing.

CAUTION

DO NOT take out the standard paper tray while paper is feeding from a lower paper tray as this will cause a paper jam.

Jam Duplex (paper jam underneath the standard paper tray (tray 1) or in the fuser unit) (HL-4050CDN only)

```
Jam Duplex
```

If a paper jam occurs inside the duplex unit, follow these steps:

1. Pull the paper tray completely out of the printer and check inside the printer.

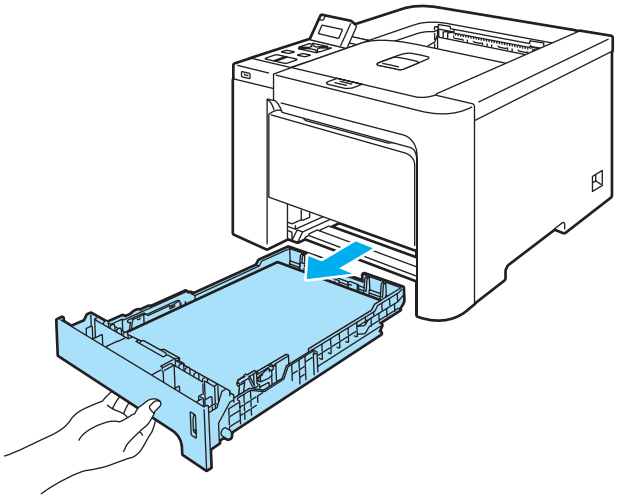

2. If paper is not caught inside the printer, check underneath the paper tray.

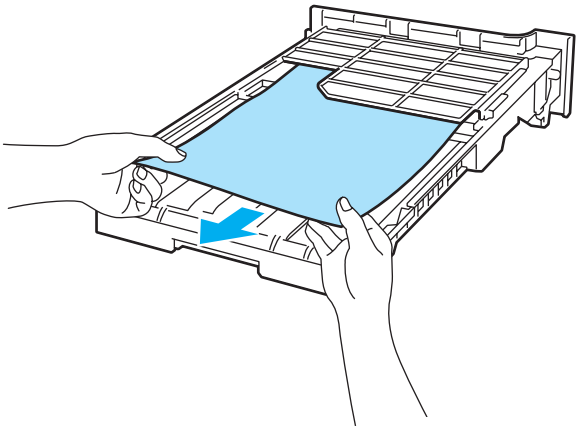

Note

Do not put the paper tray back in at this point.

3 If the paper is not caught in the paper tray, open the back cover.

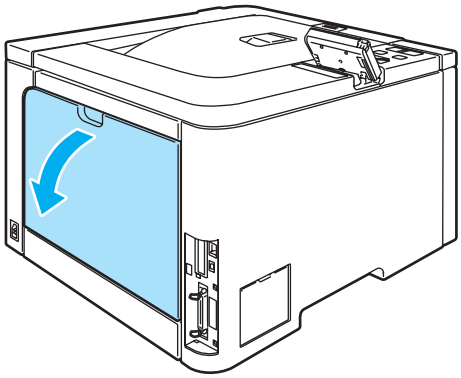

4 Push the gray lever on the left hand side (1) to the right.

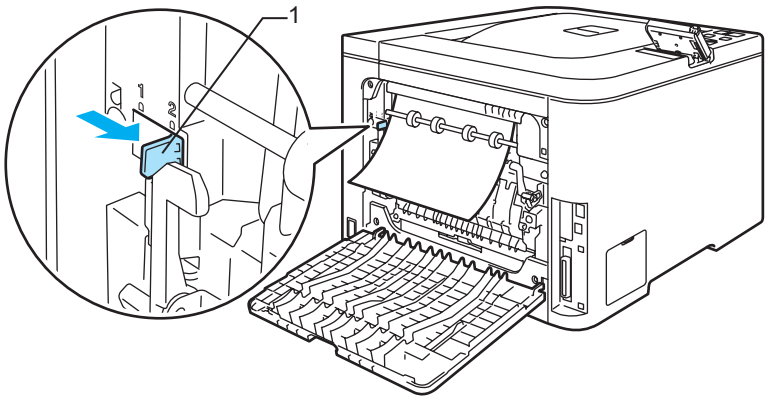

HOT SURFACE

After you have just used the printer, some internal parts of the printer will be extremely hot. Wait for the printer to cool down before you touch the internal parts of the printer.

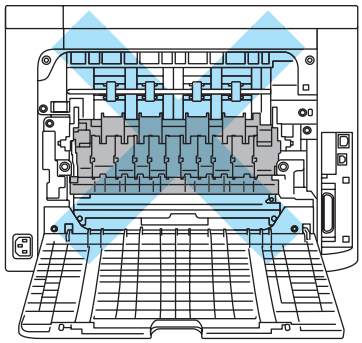

5 Pull out the jammed paper slowly.

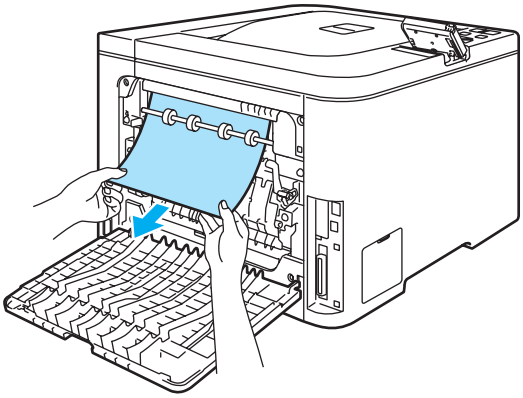

6 Reset the gray lever on the left hand side (1) back to the original position.

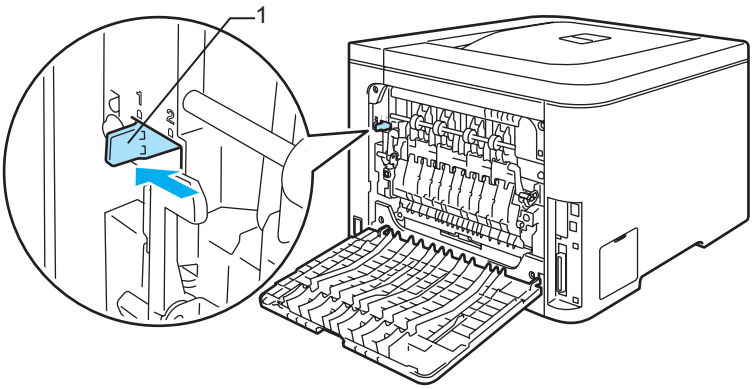

7 Fully close the back cover.

8 Put the paper tray back in the printer.

Jam Rear (paper jam behind the back cover)

```
Jam Rear
```

HOT SURFACE

After you have just used the printer, some internal parts of the printer will be extremely hot. When you open the front cover or back cover of the printer, DO NOT touch the shaded parts shown in the illustrations.

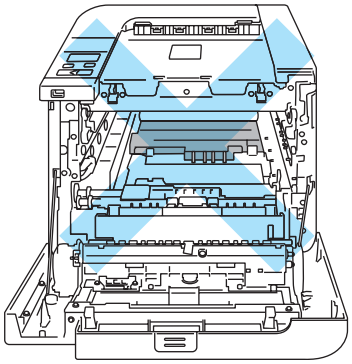

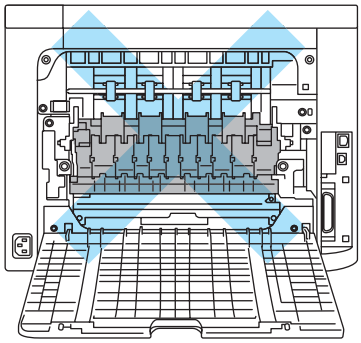

If a paper jam occurs behind the face-up output tray, follow these steps:

1. Open the back cover.

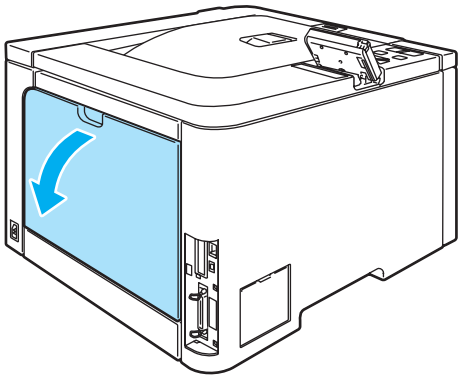

2 Pull the tabs at the left and right hand sides toward you and fold down the fuser cover (1).

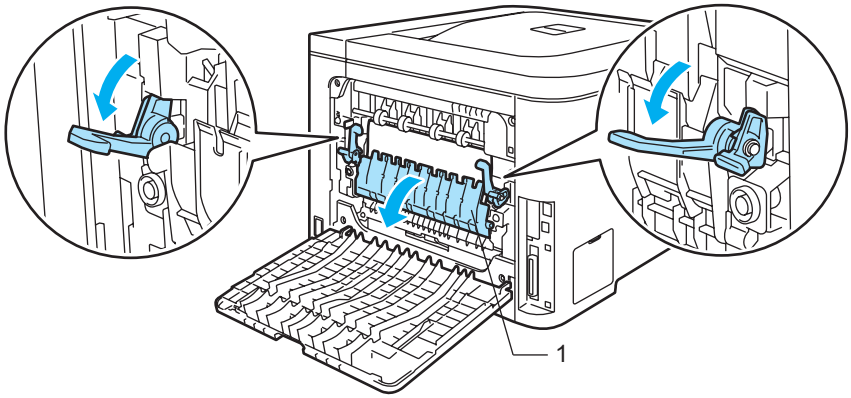

3 Using both hands, gently pull the jammed paper out of the fuser unit.

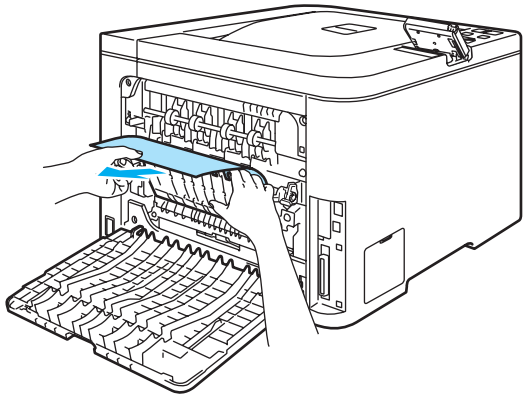

HOT SURFACE

After you have just used the printer, some internal parts of the printer will be extremely hot. Wait for the printer to cool down before you touch the internal parts of the printer.

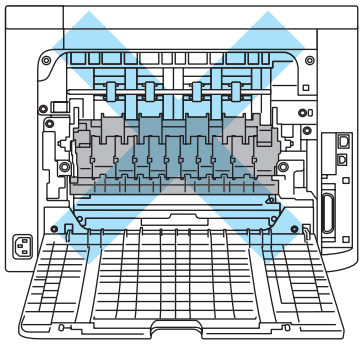

4 Close the fuser cover (1) and lift the tabs at the left and right hand sides.

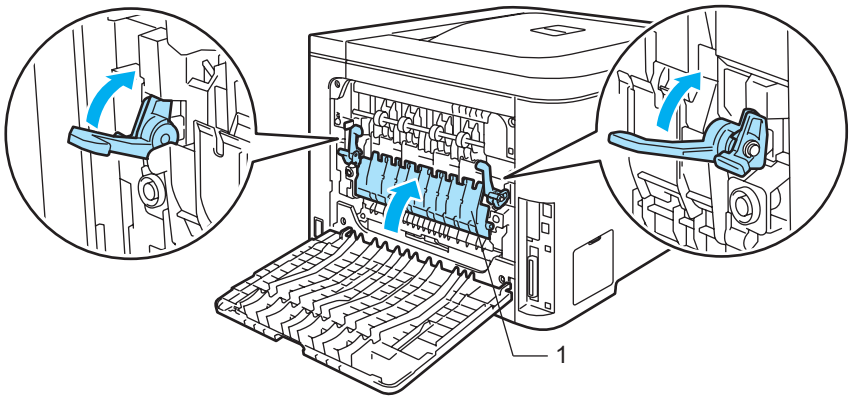

5 Fully close the back covers.

Jam Inside (paper jam inside the printer)

```
Jam Inside
```

HOT SURFACE

After you have just used the printer, some internal parts of the printer will be extremely hot. When you open the front cover or back cover of the printer, DO NOT touch the shaded parts shown in the illustrations.

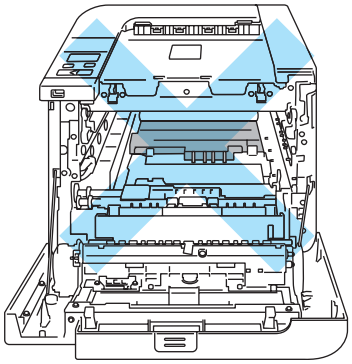

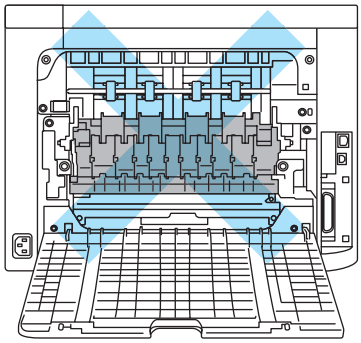

If a paper jam occurs inside the printer, follow these steps:

1. Turn off the printer power switch. Press the front cover release button and then open the front cover.

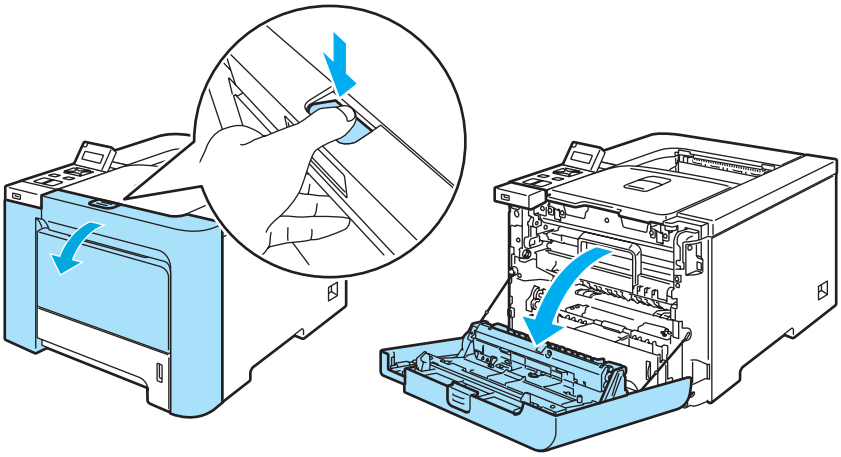

2 Hold the green handle of the drum unit. Lift the drum unit up and then pull it out until it stops.

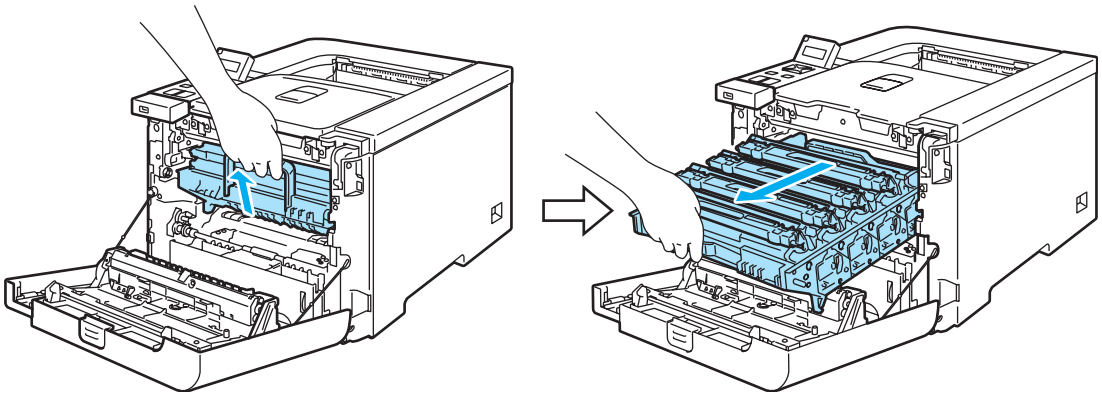

Note

If you cannot pull the drum unit out, make sure that the front cover is fully open as shown below.

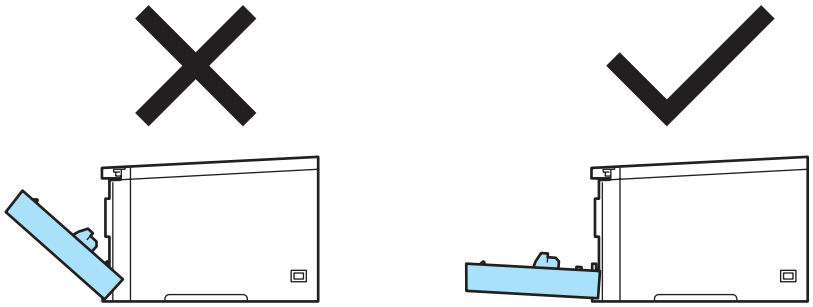

3 Release the gray lock lever (1) that is on the left side of the printer. Pull the drum unit completely out using the green handles on the drum unit.

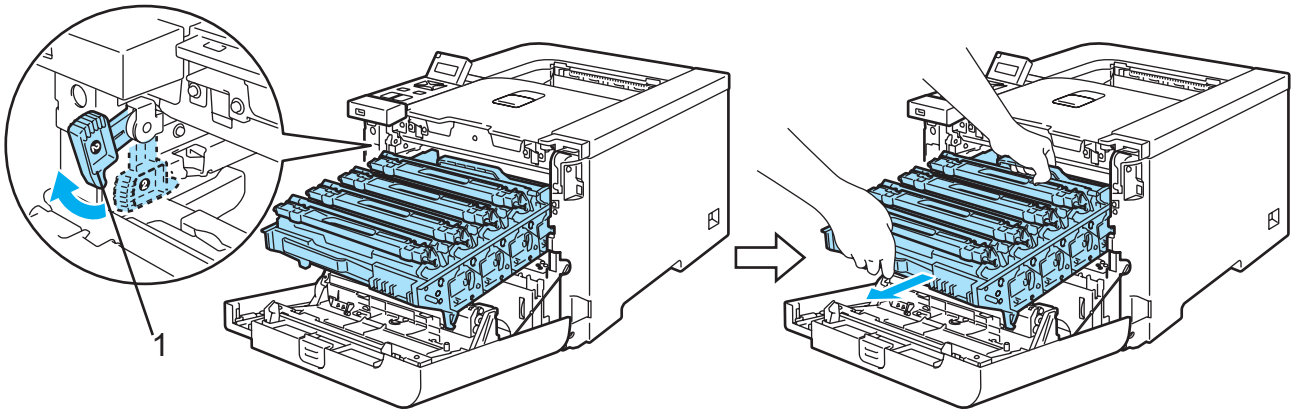

CAUTION

Hold the green handles of the drum unit when you carry it. DO NOT hold the sides of the drum unit.

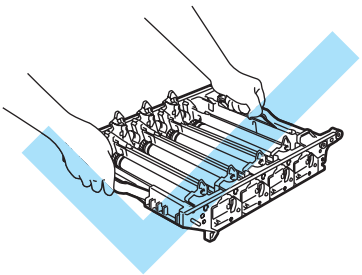

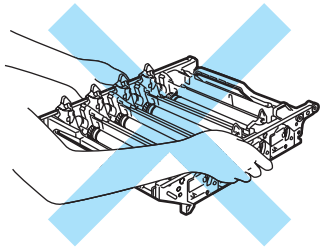

We recommend that you place the drum unit on a clean, flat surface with a piece of disposable paper underneath it in case you accidentally spill or scatter toner.

To prevent damage to the printer from static electricity, DO NOT touch the electrodes shown in the illustration.

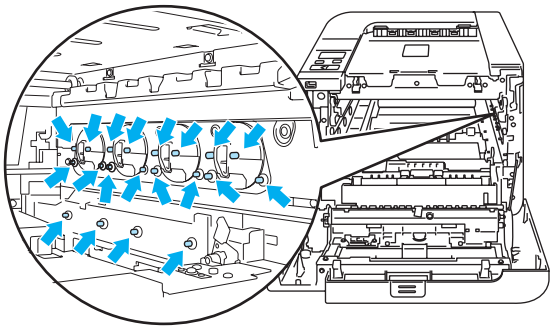

4 Pull out the jammed paper slowly.

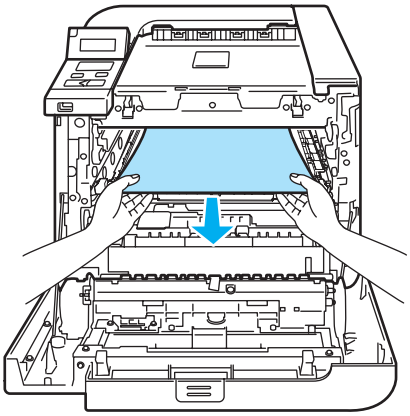

5 Put the drum unit back in the printer as follows.

1 Make sure that the gray lock lever (1) is in the up position and put the drum unit in the printer. Push down the gray lock lever (1).

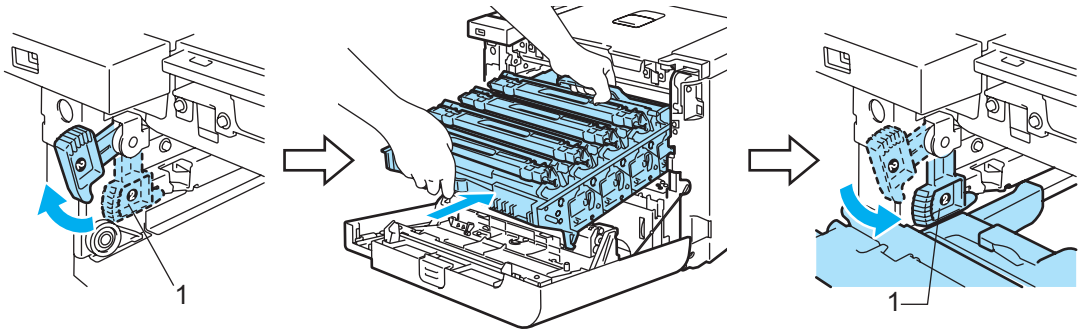

Note

When you put the drum unit in the printer, match the green guides (1) of the drum unit handle to the green arrows (2) on both sides of the machine.

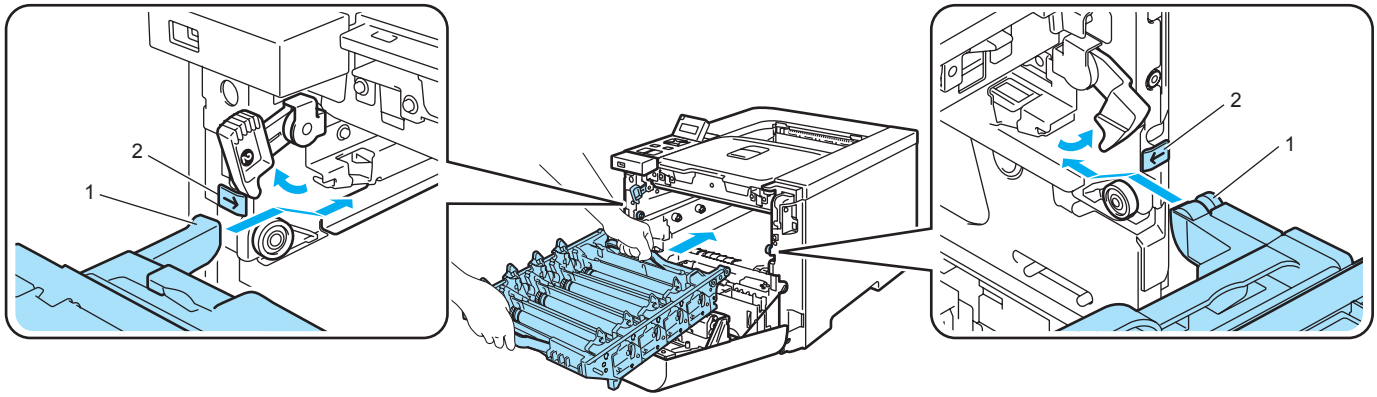

2 Push the drum unit in until it stops.

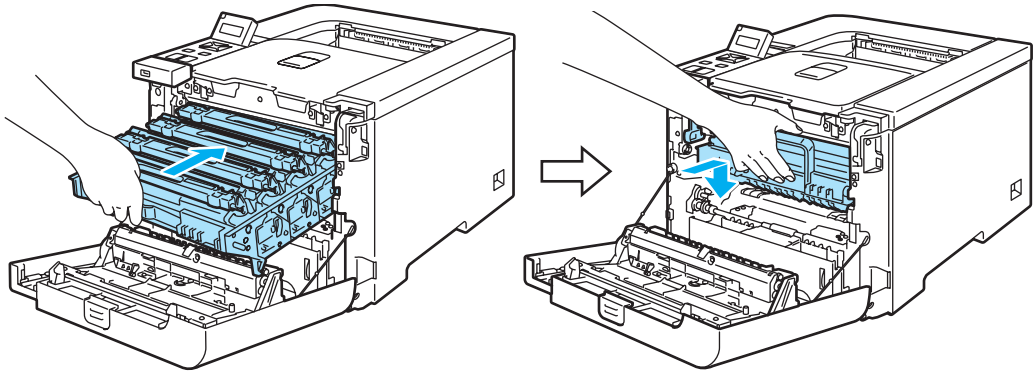

6 Close the front cover.

Improving the print quality

If you have a print quality problem, print a test page first (see *Menu table* on page 77). If the printout looks good, the problem is probably not the printer. Check the interface cable or try the printer on another computer.

This section gives information on the following topics.

Note

You can resolve a print quality problem by replacing a toner cartridge with a new one when the toner indicators start blinking or the LCD shows the `Toner Life End` message.

Examples of poor print quality	Recommendation
White lines or bands or ribbing across the page 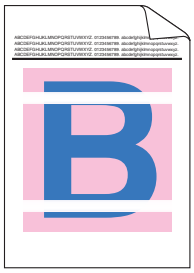	■ Make sure that the printer is on a solid level surface. ■ Make sure that the back cover is closed properly. ■ Make sure that the toner cartridges are installed properly. ■ Make sure that the drum unit is installed properly. ■ Put in a new drum unit. (See *Replacing the drum unit* on page 103.)
Colors are light or unclear on the whole page 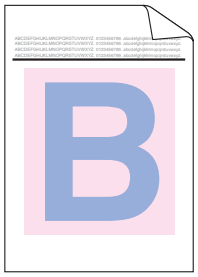	■ Make sure that the recommended paper was used. ■ Change the paper to freshly unpacked paper. ■ Make sure that the back cover is closed properly. ■ Shake the toner cartridges gently. ■ Wipe the scanner windows with a dry lint free soft cloth. (See *Cleaning the inside of the scanner windows* on page 121.)
White streaks or bands down the page 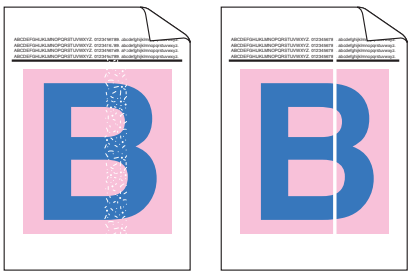	■ Shake the toner cartridges gently. ■ Wipe the scanner windows with a dry lint free soft cloth. (See *Cleaning the inside of the scanner windows* on page 121.) ■ Identify the missing color and put in a new toner cartridge. (See *Replacing a toner cartridge* on page 96.)

Examples of poor print quality	Recommendation
Colored streaks or bands down the page 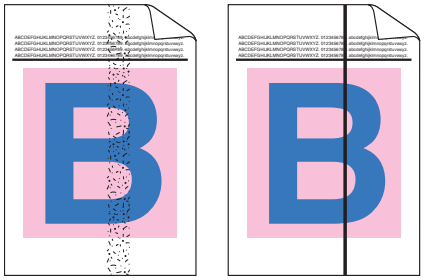	■ Replace the toner cartridge that matches the color of the streak or band. (See *Replacing a toner cartridge* on page 96.) ■ Clean all four corona wires (one for each color) inside the drum unit by sliding the green tab. (See *Cleaning the corona wires* on page 125.) ■ Make sure the corona wire cleaners are at their home positions (▲). ■ Put in a new drum unit. (See *Replacing the drum unit* on page 103.)
Colored lines across the page 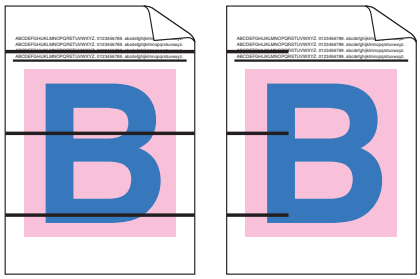	■ Replace the toner cartridge that matches the color of the line. (See *Replacing a toner cartridge* on page 96.) ■ Put in a new drum unit. (See *Replacing the drum unit* on page 103.)
White spots or hollow print	■ Change the paper to freshly unpacked paper. ■ Make sure that you use paper that meets our specifications. (See *About paper* on page 6.) ■ Make sure that the media type setting in the driver matches the type of paper you are using. (See *About paper* on page 6.) ■ Check the printer's environment. Conditions such as high humidity can cause white spots or hollow print. (See *Positioning the printer* on page 5.)
Completely blank or some colors are missing 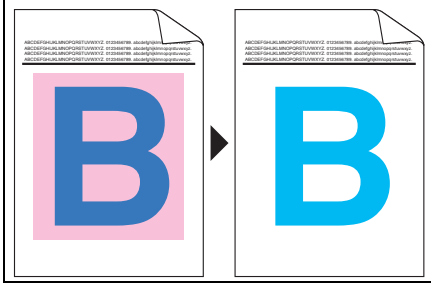	■ Identify the missing color and make sure that the toner cartridge is installed properly. ■ Put in a new toner cartridge. (See *Replacing a toner cartridge* on page 96.) ■ Put in a new drum unit. (See *Replacing the drum unit* on page 103.)

Examples of poor print quality	Recommendation
Colored spots at 75mm 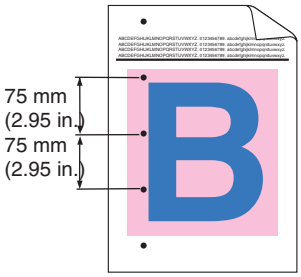	■ If the problem is not solved after printing a few pages, the drum unit may have glue from a label stuck on the drum surface. Clean the drum unit. (See *Cleaning the drum unit* on page 130.)
Toner scatter or toner stain	■ Check the printer's environment. Conditions such as high humidity and high temperatures may cause this print quality problem. (See *Positioning the printer* on page 5.) ■ Make sure that you use paper that meets our specifications. (See *About paper* on page 6.) ■ Identify the color causing the problem and put in a new toner cartridge. (See *Replacing a toner cartridge* on page 96.) ■ If the problem continues, put in a new drum unit. (See *Replacing the drum unit* on page 103.)
The color of your printouts is not what you expected	■ Make sure that the toner cartridges are installed properly. ■ Make sure that the drum unit is installed properly. ■ Make sure that the belt unit is installed properly. ■ Make sure that the waste toner box is installed properly. ■ Perform the calibration. (See *Calibration* on page 87.) ■ Adjust the color by using the custom setting in the driver and by using the control panel. Colors the printer can print and colors you see on a monitor are different. The printer may not be able to reproduce the colors on your monitor. (See *Menu table* on page 77.) ■ Make sure that you use paper that meets the printer's specifications. (See *About paper* on page 6.) ■ Put in a new drum unit. (See *Replacing the drum unit* on page 103.) ■ Put in a new belt unit. (See *Replacing the belt unit* on page 109.) ■ Put in a waste toner box. (See *Replacing the waste toner box* on page 114.)
All one color	■ Put in a new drum unit. (See *Replacing the drum unit* on page 103.)

Examples of poor print quality	Recommendation
Color misregistration 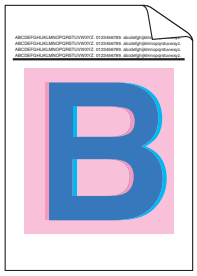	■ Make sure that the drum unit is installed properly. ■ Make sure that the belt unit is installed properly. ■ Make sure that the waste toner box is installed properly. ■ Perform the auto color registration by using the control panel (see *Auto Registration* on page 88) or perform the manual color registration by using the control panel (see *Manual Registration* on page 89). If the color mis-registration is not corrected after registering the color manually, take all the toner cartridges out of the drum unit and turn the drum unit over, then make sure that four drum unit gears are in the home position. The home position of each drum can be identified by matching the number on the drum unit gear to the same number on the side of the drum unit as shown in the illustration. 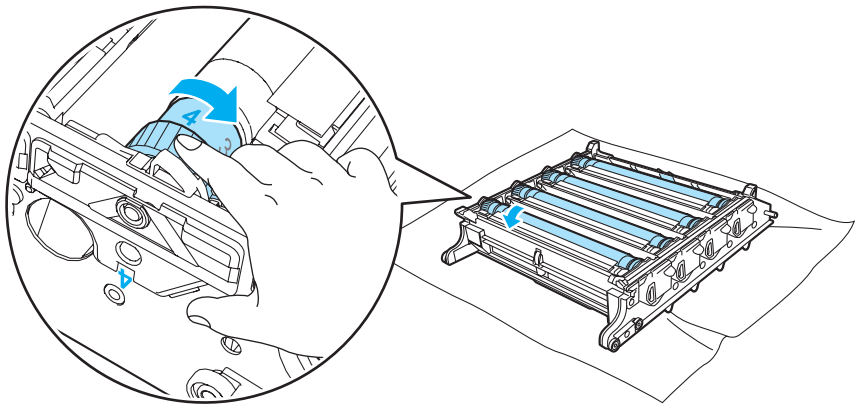 ■ Put in a new drum unit. (See *Replacing the drum unit* on page 103.) ■ Put in a new belt unit. (See *Replacing the belt unit* on page 109.) ■ Put in a waste toner box. (See *Replacing the waste toner box* on page 114.)
Uneven density appears periodically across the page 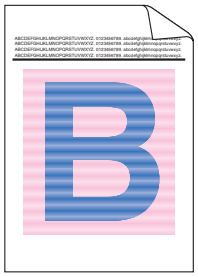	■ Identify the color that is uneven and put in a new toner cartridge for that color. (See *Replacing a toner cartridge* on page 96.) ■ Put in a new drum unit. (See *Replacing the drum unit* on page 103.)
Missing image at edge	■ Put in a new toner cartridge. (See *Replacing a toner cartridge* on page 96.) ■ Put in a new drum unit. (See *Replacing the drum unit* on page 103.)
Missing image at thin line	■ If you use Windows printer driver, choose Improve pattern printing or Improve Thin Line in Print Setting of Advanced tab. (See *Device Options* on page 41.)

Examples of poor print quality	Recommendation
Wrinkle 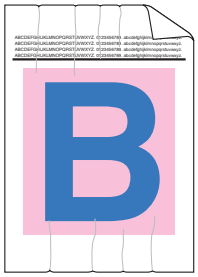	■ Change to the recommended type of paper. ■ Make sure that the back cover is closed properly. ■ Make sure that the drum unit is installed properly. ■ Make sure that the fuser unit is installed properly. ■ Replace the fuser unit. Call Brother Customer Service.
Offset image	■ Check the printer’s environment. Conditions such as humidity and high temperatures may cause this print quality problem. (See *Positioning the printer* on page 5.) ■ Make sure that you use paper that meets the printer's specifications. (See *About paper* on page 6.) ■ Put in a new drum unit. (See *Replacing the drum unit* on page 103.)
Poor fixing 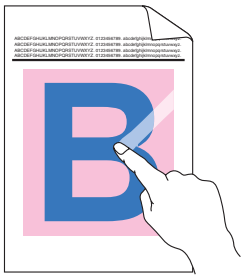	■ Make sure that you use paper that meets the printer's specifications. (See *About paper* on page 6.) ■ Make sure that the media type setting in the driver matches the type of paper you are using. (See *About paper* on page 6.) ■ Make sure that the release lever of the fuser unit is in the closed position. ■ Replace the fuser unit. Call Brother Customer Service.
Poor fixing when printed on thick paper	■ Set the printer to thick paper mode from the control panel or the printer driver.

Examples of poor print quality	Recommendation
Curled or wavy 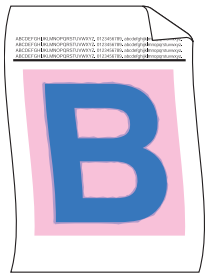	■ Check the paper type and quality. High temperatures and high humidity will cause paper to curl. (See *About paper* on page 6.) ■ If you do not use the printer often, the paper may have been in the paper tray too long. Turn over the stack of paper in the paper tray. Also, fan the paper stack and then rotate the paper 180° in the paper tray. ■ Follow these steps: 1 Open the back cover. 2 Push the gray lever to the right as shown below. 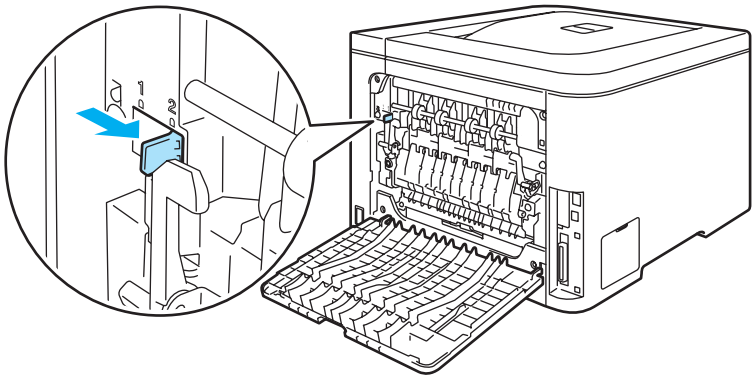 3 Close the back cover and re-send the print job. **Note** When you have finished printing, open the back cover and reset the lever back to the original position.

Examples of poor print quality	Recommendation
Envelope Creases 	1 Open the back cover. 2 Pull down the two gray levers, one on the left-hand side and one on the right-hand side, to the envelope position as shown in the illustration below. 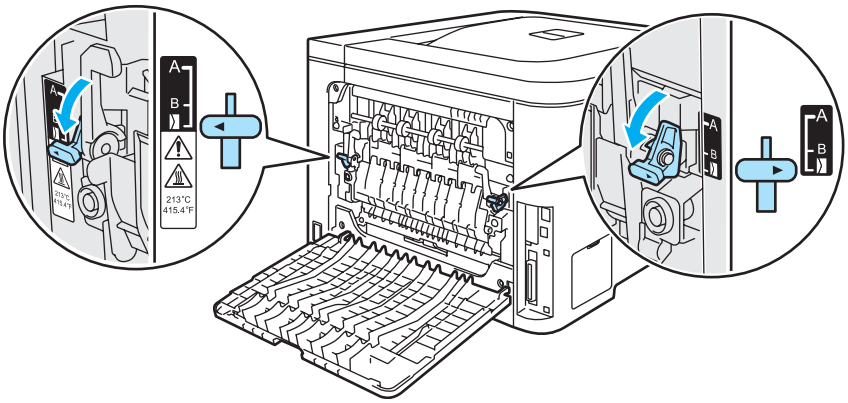 3 Close the back cover and re-send the print job. **Note** When you have finished printing, open the back cover and reset the two gray levers back to the original position.

Examples of poor print quality	Recommendation
Toner scatter or toner stain on the edge of duplex pages 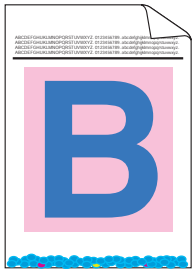	**CAUTION** . We recommend that you place the drum unit and toner cartridges on a clean, flat surface with a piece of disposable paper underneath them in case you accidentally spill or scatter toner. DO NOT touch the surface of the photosensitive drum. Take all the toner cartridges out of the drum unit and turn the drum unit over. Wipe the toner on the edge of drum unit with a dry lint free soft cloth as shown in the illustration. 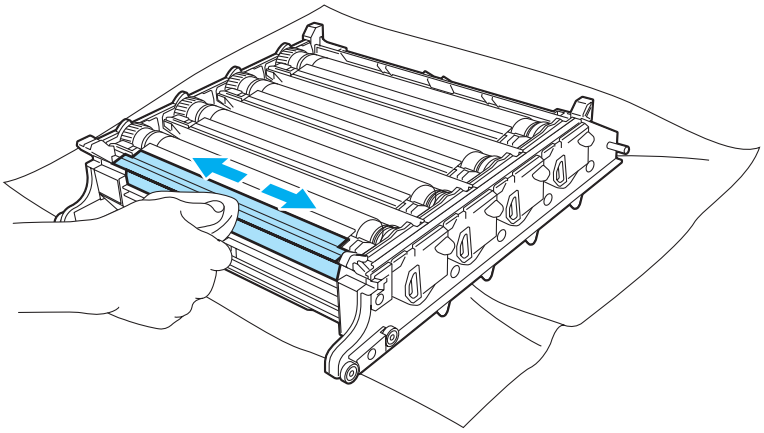

Solving print problems

Problem	Recommendation
The printer prints unexpectedly or it prints garbage data.	■ Make sure that the printer cable is not too long. We recommend that you use a parallel or USB cable that is no longer than 2 meters (6.5 feet). ■ Make sure that the printer cable is not damaged or broken. ■ If you are using an interface-switching device, remove it. Connect your computer directly to your printer, and then try again. ■ Make sure that you have chosen the correct printer driver with 'Set as Default'. ■ Make sure that the printer is not connected to the same port that is also connected to a storage device or scanner. Take away all other devices and connect the port only to the printer. ■ Turn off the **Status Monitor**.
The printer cannot print full pages of a document. An error message **Out of Memory** is appears.	■ Press **Go** to print the remaining data in the printer memory. Cancel the print job if you want to delete the remaining data in the printer memory. (See *Buttons* on page 69.) ■ Reduce the complexity of your document or cut the print resolution. ■ Add more memory. (See *Installing extra memory* on page 92.)
The headers or footers appear when the document displays on the screen but they do not show up when it is printed.	■ Adjust the top and bottom margins of your document.

Network problems

For problems concerning using your printer on a Network, see the Network User's Guide on the CD-ROM we have supplied.

Other problems

Problem	Recommendation
The printer cannot print. '**There was an error writing to LPT1: for the printer'** error message occurs on your computer.	■ Make sure that the printer cable is not damaged or broken. ■ If you have an interface-switching device, make sure that you chose the correct printer.

For Macintosh® with USB

Problem	Recommendation
The printer does not appear in **Print Center** (Mac OS® X 10.2) or **Print Setup Utility** (Mac OS® X 10.3 or greater).	■ Make sure that the printer is turned on. ■ Make sure that the USB interface cable is connected correctly. ■ Make sure the printer driver is installed correctly.
Unable to print from the application.	■ Make sure that the supplied Macintosh® printer driver is installed in the **Hard Disk** and that it is chosen with **Print Center** (Mac OS® X 10.2) or **Print Setup Utility** (Mac OS® X 10.3 or greater).

Printing from DOS

Problem	Recommendation
Cannot print from an application.	■ Make sure that the DOS application interface settings match those of your printer. For example, if you are using a parallel printer cable, you would set your DOS application printer port to LPT1. ■ Check if the printer has any printer alarms. ■ Make sure that you have chosen a printer driver in your application that is supported by your Brother printer. (For information about the printers your machine can emulate, see *About emulation modes* on page 67.)

BR-Script 3 (HL-4050CDN only)

Problem	Recommendation
The print speed slows down.	Add optional memory. (See *Installing extra memory* on page 92.)
The printer cannot print EPS data that includes binary.	You need the following settings to print EPS data: 1 For Windows Vista™: Click **Start** button, **Control Panel**, **Hardware and Sound**, and then **Printers**. For Windows® XP and Windows Server® 2003: Click **Start** button, and select **Printers and Faxes** windows. For Windows® 2000: Click **Start** button, and select **Settings** and then **Printers**. 2 Right-click the **Brother HL-4050CDN BR_Script3 series** icon and select **Properties**. 3 From the **Device Settings** tab, choose **TBCP** (Tagged binary communication protocol) in **Output Protocol**.

A Appendix

Printer specifications

Engine

Model			HL-4040CN	HL-4050CDN
Technology			Electrophotographic	
Print speed [1] (A4 size/ Letter size)	Standard (A4/Letter)	Monochrome	Up to 20 ppm (A4 size) [2],Up to 21 ppm (Letter size) [2]	
		Full Color	Up to 20 ppm (A4 size) [2],Up to 21 ppm (Letter size) [2]	
	Auto Duplex (A4/Letter) (HL-4050CDN only)	Monochrome	N/A	Up to 7 sides per minute (3.5 sheets per minute)
		Full Color	N/A	Up to 7 sides per minute (3.5 sheets per minute)
First print time [3]	Monochrome		Less than 16 sec	
	Full Color		Less than 17 sec	
Resolution	Windows® 2000/XP/ XP Professional x64 Edition, Windows Vista™, Windows Server® 2003/ Windows Server® 2003 x64 Edition		2400 dpi (2400 × 600) quality 600 × 600 dpi	
	DOS		600 × 600 dpi	
	Mac OS® X 10.2.4 or greater		2400 dpi (2400 × 600) quality 600 × 600 dpi	
	Linux		600 × 600 dpi	

1 The printing speed may change depending on the type of document you print.

2 From standard paper tray and optional paper tray.

3 First print out time may change if the machine is calibrating or registering itself.

Controller

Model		HL-4040CN	HL-4050CDN
Processor		300MHz	
Memory	Standard	64 MB	
	Option	1 DIMM slot; expandable up to 576 MB	
Interface	Standard	Hi-Speed USB 2.0, 10BASE-T/100BASE-TX Ethernet	Hi-Speed USB 2.0, IEEE 1284 Parallel, 10BASE-T/100BASE-TX Ethernet
Network Connectivity	Protocols	TCP/IP (Standard 10/100BASE-TX Ethernet) [1]	
	Management tool	BRAdmin Light BRAdmin Professional [3] Web BRAdmin [4] Web Based Management [2]	
Emulation		PCL6	PCL6, BR-Script 3 (PostScript® 3™)
Resident fonts	PCL	66 scalable fonts, 12 bitmap fonts, 13 bar codes [5]	
	PostScript® 3™	N/A	66 fonts

[1] See the Network User's Guide locator on the CD-ROM for details on the supported network protocols.

[2] Printer and print server management through Web Based Management (Web browser).

[3] Brother original Windows® utility for printer and print server management. Download from http://solutions.brother.com.

[4] Server based management utility. Download from http://solutions.brother.com.

[5] Code39, Interleaved 2 of 5, EAN-8, EAN-13, UPC-A, UPC-E, EAN-128, Codabar, FIM (US-PostNet), ISBN, Code128

Software

Model		HL-4040CN	HL-4050CDN
Printer driver	Windows®	Host-Based Driver for Windows® 2000/XP/XP Professional x64 Edition, Windows Vista™, Windows Server® 2003/Windows Server® 2003 x64 Edition	
		N/A	BR-Script 3 (PPD file) for Windows® 2000/XP/XP Professional x64 Edition, Windows Vista™, Windows Server® 2003/Windows Server® 2003 x64 Edition.
	Macintosh®	Macintosh Printer Driver for Mac OS® × 10.2.4 or greater	
		N/A	BR-Script 3 (PPD file) for Mac OS® X 10.2.4 or greater
	Linux	Linux driver for CUPS printing system (x86, x64 environment) [1] [2]	
		Linux driver for LPD/LPRng printing system (x86, x64 environment) [1] [2]	
Utilities		Interactive Help [3] Driver Deployment Wizard [4]	

1 Download the printer driver for Linux from http://solutions.brother.com.

2 Depending on Linux distributions, the driver may not be available.

3 Instructional animations for problem solving.

4 The Driver Deployment Wizard automates the installation of printers in a peer-to-peer network (Windows® only).

Direct Print feature

Model	HL-4040CN	HL-4050CDN
Direct Print	PDF version1.6 [1], JPEG, Exif+JPEG, PRN (created by HL-4040CN or HL-4050CDN printer driver) [2], TIFF (scanned by all Brother MFC or DCP models)	PDF version1.6 [1], JPEG, Exif+JPEG, PRN (created by HL-4040CN or HL-4050CDN printer driver) [2], TIFF(scanned by all Brother MFC or DCP models), PostScript® 3™(created by HL-4050CDN BRScript3 printer driver) [2]

1 The data including JBIG2 image file, JPEG2000 image file and layered files are not supported.

2 See *Creating a PRN or PostScript® 3™ (HL-4050CDN only) file for direct printing* on page 29.

Control panel

Model	HL-4040CN	HL-4050CDN
LED	2 LED: Data LED, Direct Print LED	
LCD	2 line, 16 Digits, 3 colors	
Button	8 buttons: Go, Cancel, Reprint, Direct Print, OK, Back and 2 scroll buttons	

Paper handling

Model		HL-4040CN	HL-4050CDN
Paper Input [1]	Multi-purpose tray	50 sheets	
	Paper tray (Standard)	250 sheets	
	Lower tray (Option)	N/A	500 sheets
Paper Output [1]	Face-down	150 sheets	
Duplex	Manual Duplex	Yes	
	Automatic Duplex	N/A	Yes

[1] Calculated with 80 g/m2 (20 lb) paper

Media specifications

Model		HL-4040CN	HL-4050CDN
Media types	Multi-purpose tray	Plain paper, Bond paper, Recycled paper, Envelopes, Label, Thin paper, Thick paper, Post card	
	Paper tray	Plain paper, Recycled paper, Thin paper	
	Lower tray unit (Option) (LT-100CL)	N/A	Plain paper, Recycled paper, Thin paper
	Automatic duplex printing	N/A	Plain paper, Recycled paper, Thin paper
Media weights	Multi-purpose tray	60 to 163 g/m^2 (16 to 43 lb)	
	Paper tray	60 to 105 g/m^2 (16 to 28 lb)	
	Lower tray unit (Option) (LT-100CL)	N/A	60 to 105 g/m^2 (16 to 28 lb)
	Automatic duplex printing	N/A	60 to 105 g/m^2 (16 to 28 lb)
Media sizes	Multi-purpose tray	Width: 69.9 to 215.9 mm (2.75 to 8.5 in.) Length: 116 to 406.4 mm (4.57 to 16 in.)	
	Paper tray (Standard)	A4, Letter, Legal [1], B5 (ISO), Executive, A5, A6, B6 (ISO), Folio	
	Lower tray unit (Option) (LT-100CL)	N/A	A4, Letter, Legal [1], B5 (ISO), Executive, A5, B6 (ISO), Folio
	Automatic duplex printing	N/A	A4, A4 Long

[1] Legal size paper is not available in some regions outside the USA and Canada.

Supplies

Model			HL-4040CN	HL-4050CDN	Order No.
Toner Cartridge	Black	Standard cartridge	Approx. 2,500 pages A4/Letter pages @ 5% coverage		TN-170BK
		High yield cartridge	Approx. 5,000 pages A4/Letter pages @ 5% coverage		TN-175BK
	Cyan, Magenta, Yellow	Standard cartridge	Approx. 1,500 pages A4/Letter pages @ 5% coverage		TN-170C, TN-170M, TN-170Y
		High yield cartridge	Approx. 4,000 pages A4/Letter pages @ 5% coverage		TN-175C, TN-175M, TN-175Y
Drum Unit			Approx. 17,000 pages A4/Letter pages		DR-170CL
Belt Unit			Approx. 50,000 pages A4/Letter pages		BU-100CL
Waste Toner Box			Approx. 20,000 pages A4/Letter pages @ 5% coverage for CMYK each		WT-100CL

Dimensions / weights

Model	HL-4040CN	HL-4050CDN
Dimensions (W × D × H)	419 × 475 × 317 mm (16.5 × 18.7 × 12.5 in.)	
Weights	Approx. 29.1 kg (64.2 lb)	

Other

Model				HL-4040CN	HL-4050CDN
Power consumption			Printing	Average 510 W at 25 °C (77 °F)	Average 510 W at 25 °C (77 °F)
			Standby	Average 85 W at 25 °C (77 °F)	Average 85 W at 25 °C (77 °F)
			Sleep	Average 20 W	Average 20 W
Noise level	Sound Pressure		Printing	54 dB (A)	
			Standby	30 dB (A)	
	Sound power	Monochrome	Printing	LWAd = 6.6 Bell (A)	
			Standby	LWAd = 4.8 Bell (A)	
		Color	Printing	LWAd = 6.6 Bell (A)	
			Standby	LWAd = 4.8 Bell (A)	
Ecology	Power save			Yes	
	Toner save [1]			Yes	

[1] We do not recommend Toner Save for printing Photo or Gray Scale images.

Computer requirements

Computer Platform & Operating System Version		Processor Minimum Speed	Minimum RAM	Recommended RAM	Available Hard Disk Space
Windows® Operating System	Windows® 2000 Professional	Intel® Pentium® or equivalent	64 MB	128 MB	50 MB
	Windows® XP Home Edition		128 MB	256 MB	50 MB
	Windows® XP Professional				
	Windows® XP Professional x64 Edition	AMD Opteron™ AMD Athlon™ 64 Intel® Xeon® with Intel® EM64T Intel® Pentium® 4 with Intel® EM64T or equivalent	256 MB	384 MB	50 MB
	Windows Vista™	Intel® Pentium® 4 or equivalent 64-bit supported CPU	512 MB	1 GB	50 MB
	Windows Server® 2003	Intel® Pentium® III or equivalent	256 MB	512 MB	50 MB
	Windows Server® 2003 x64 Edition	AMD Opteron™ AMD Athlon™ 64 Intel® Xeon® with Intel® EM64T Intel® Pentium® 4 with Intel® EM64T or equivalent			
Macintosh® Operating System [1]	OS® X 10.2.4 or greater	PowerPC G4/G5, Intel® Core™ Solo/Duo, PowerPC G3 350MHz	128 MB	160 MB	50 MB

[1] Third party USB ports are not supported.

A

Important information for choosing your paper

This section gives information to help you choose paper to use with this printer.

Note

If you use paper that is not recommended, a paper jam or misfeed may occur in the printer. (See *Recommended paper* on page 7.)

Before you buy a large quantity of paper

Make sure that the paper is suitable for the printer.

Paper for plain paper copies

Paper is divided by usage, such as paper for printing and paper for copying. The usage is usually written on the paper's package. Check the package to see whether it is suitable for laser printers. Use paper that is suitable for laser printers.

Basis weight

The basis weight of the paper in general use varies in different countries. We recommend that you use paper that weighs 75 to 90 g/m^2 (20 to 24 lb), although this printer is able to cope with thinner or thicker paper than these weights.

Unit	Europe	USA
g/m^2	80 to 90	75 to 90
lb		20 to 24

Long grain and short grain

The pulp fiber of the paper is aligned during paper manufacturing. And paper can be classified into two types, long grain and short grain.

Long grain paper fibers run in the same direction as the long edge of the paper. Short grain paper fibers run perpendicular to the long edge of the paper. Though most plain paper for copying is long grain, some is short grain. We recommend that you use long grain paper for this printer. Short grain paper is too weak for the paper transport of the printer.

Acid paper and neutralized paper

Paper can be classified as either acid paper or neutralized paper.

Though modern paper manufacture methods started with acid paper, neutralized paper is recently taking the place of acid paper because of environmental issues.

However, many forms of acid paper can be found in recycled paper. We recommend that you use neutralized paper for this printer.

You can use an acid paper check pen to distinguish acid paper from neutral paper.

Print surface

The characteristics of the face side and reverse side of a sheet of paper may vary a little.

Usually, the opening side of the paper ream package is the print side. Follow the indications on the paper package. Typically, the print side is indicated by an arrow.

Moisture content

Moisture content is the amount of water left in the paper after manufacture. It is one of the important characteristics of the paper. This can change greatly depending on the storage environment, although usually paper contains about 5% water by weight. Because paper often absorbs water, the amount of water can sometimes be about 10% in a high humidity environment. When the amount of water increases, the characteristics of the paper changes greatly. The fixing of the toner may become worse. For storage of the paper and during use, we recommend that the humidity of the surrounding environment be between 50% and 60%.

Rough estimate of basis weight

g/m^2	lb	
	Bond	Index
60	16	
64	17	
75	20	
90	24	
105	28	
120	32	
135	36	
161	43	90
200	53	110

Paper size

Paper size	mm	in.
Letter		8.5 × 11 in.
Legal		8.5 × 14 in.
Executive		7.25 × 10.5 in.
A4	210 × 297 mm	
A5	148 × 210 mm	
A6	105 × 148 mm	
Envelope Monarch		3.875 × 7.5 in.
Envelope Com-10		4.12 × 9.5 in.
Envelope DL	110 × 220 mm	
Envelope C5	162 × 229 mm	
B5 (JIS)	182 × 257 mm	
B5 (ISO)	176 × 250 mm	
B6 (ISO)	125 × 176 mm	
Folio		8.5 × 13 in.
Post Card	100 × 148 mm	
A4 Long	210 × 405 mm	
Envelope DL-L	220 × 110 mm	
3 × 5		3 × 5 in.
Organizer J		2.75 × 5 in.
Organizer K		3.75 × 6.75 in.
Organizer L		5.5 × 8.5 in.
Organizer M		8.5 × 11 in.

Symbol and character sets

For the HP LaserJet emulation modes, you can choose the symbol and character sets using a Web Based Management (Web browser) or the control panel buttons.

How to use the Web Based Management (web browser)

To use the Web Based Management (Web browser), follow the steps below.

1. Enter [http://printer's IP address/] into your browser.
   For example: [http://192.168.1.2/] (if the printer's IP address is 192.168.1.2)
2. Click **Printer Settings**.
3. Enter a user name and a password. The default User Name is [admin] and the default Password is [access].
4. Click **OK**.
5. Choose the **HP LaserJet** tab and click **Font Setup**. Choose a symbol set you want to use from the **Symbol Set** list box.

Symbol and character sets list

OCR symbol sets

When you choose the OCR-A or OCR-B font, the matching symbol set is always used.

OCR A (0O)

OCR B (1O)

HP LaserJet mode

ABICOMP Brazil / Portugal (13P)	ABICOMP International (14P)
Desktop (7J)	Greek8 (8G)
HP German (0G)	HP Spanish (1S)
ISO Latin1 (0N)	ISO Latin2 (2N)
ISO Latin5 (5N)	ISO Latin6 (6N)
ISO2 IRV (2U)	ISO4 UK (1E)
ISO5 ASCII (0U)	ISO10 Swedish (3S)
ISO11 Swedish (0S)	ISO14 JIS ASCII (0K)
ISO15 Italian (0I)	ISO16 Portuguese (4S)
ISO17 Spanish (2S)	ISO21 German (1G)
ISO25 French (0F)	ISO57 Chinese (2K)
ISO60 Norwegian1 (0D)	ISO61 Norwegian2 (1D)

HP LaserJet mode

ISO69 French (1F)
ISO84 Portuguese (5S)
ISO85 Spanish (6S)
ISO8859 / 7 Latin / Greek (12N)
ISO8859 / 15 Latin (9N)
ISO8859 / 15 Latin / Cyrillic (10N)
Legal (1U)
Math-8 (8M)
MC Text (12J)
MS Publishing (6J)
PC8 (10U)
PC8 Bulgarian (13R)
PC8 D/N (11U)
PC8 Greek Alternate (437G) (14G)
PC8 Latin / Greek (12G)
PC8 PC Nova (27Q)
PC8 Turkish (9T)
PC775 (26U)
PC850 Multilingual (12U)
PC851 Greece (10G)
PC852 East Europe (17U)
PC853 Latin3 (Turkish) (18U)
PC855 Cyrillic (10R)
PC857 Latin5 (Turkish) (16U)
PC858 Multilingual Euro (13U)
PC860 Portugal (20U)
PC861 Iceland (21U)
PC863 Canadian French (23U)
PC865 Nordic (25U)
PC866 Cyrillic (3R)
PC869 Greece (11G)
PC1004 (9J)
Pi Font (15U)
PS Math (5M)
PS Text (10J)
Roman8 (8U)
Roman9 (4U)
Roman Extension (0E)
Russian-GOST (12R)
Symbol (19M)

Quick reference for bar code control commands

The printer can print bar codes in the HP LaserJet emulation modes.

Print bar codes or expanded characters

Code	ESC i
Dec	27 105
Hex	1B 69

Format: ESC i n ... n \

Creates bar codes or expanded characters according to the segment of parameters ‘n ... n’. For more information about parameters, see the following Definition of Parameters. This command must end with the ‘ \ ’ code (5CH).

Definition of parameters

This bar code command can have the following parameters in the parameter segment (n ... n). As parameters are effective within the single command syntax ESC i n ... n \, they do not apply in the bar code commands. If certain parameters are not given, they take the preset settings. The last parameter must be the bar code data start (‘b’ or ‘B’) or the expanded character data start (‘l’ or ‘L’). Other parameters can be given in any sequence. Each parameter can start with a lower-case or upper-case character, for example, ‘t0’ or ‘T0’, ‘s3’ or ‘S3’ and so one.

Bar code mode

n = ‘t0’ or ‘T0’	CODE 39 (default)
n = ‘t1’ or ‘T1’	Interleaved 2 of 5
n = ‘t3’ or ‘T3’	FIM (US-Post Net)
n = ‘t4’ or ‘T4’	Post Net (US-Post Net)
n = ‘t5’ or ‘T5’	EAN 8, EAN 13, or UPC A
n = ‘t6’ or ‘T6’	UPC E
n = ‘t9’ or ‘T9’	Codabar
n = ‘t12’ or ‘T12’	Code 128 set A
n = ‘t13’ or ‘T13’	Code 128 set B
n = ‘t14’ or ‘T14’	Code 128 set C
n = ‘t130’ or ‘T130’	ISBN (EAN)
n = ‘t131’ or ‘T131’	ISBN (UPC-E)
n = ‘t132’ or ‘T132’	EAN 128 set A
n = ‘t133’ or ‘T133’	EAN 128 set B
n = ‘t134’ or ‘T134’	EAN 128 set C

This parameter selects the bar code mode as shown above. When n is ‘t5’ or ‘T5’ the bar code mode (EAN 8, EAN 13, or UPC A) varies according to the number of characters in the data.

Bar code, expanded character, line block drawing and box drawing

n = ‘s0’ or ‘S0’	3: 1 (default)
n = ‘s1’ or ‘S1’	2: 1
n = ‘s3’ or ‘S3’	2.5: 1

This parameter chooses the bar code style as above. When the EAN 8, EAN 13, UPC-A, Code 128 or EAN 128 bar code mode is chosen, this bar code style parameter is ignored.

Expanded Character

‘S’

0 = White

1 = Black

2 = Vertical stripes

3 = Horizontal stripes

4 = Cross hatch

For example ‘S’ n1 n2

n1 = Background fill pattern

n2 = Foreground fill pattern

If ‘S’ is followed by only one parameter, the parameter is a foreground fill pattern.

Line block drawing & box drawing

‘S’

1 = Black

2 = Vertical stripes

3 = Horizontal stripes

4 = Cross hatch

Bar code

n = ‘mnnn’ or ‘Mnnn’ (nnn = 0 ~ 32767)

This parameter shows the bar code width. The unit of ‘nnn’ is a percentage.

Bar code human readable line ON or OFF

n = ‘r0’ or ‘R0	Human readable line OFF
n = ‘r1’ or ‘R1	Human readable line ON

Preset:	Human readable line ON
	(1) ‘T5’ or ‘t5’
	(2) ‘T6’ or ‘t6’
	(3) ‘T130’ or ‘t130’
	(4) ‘T131’ or ‘t131’
Preset:	Human readable line OFF
	All others

This parameter shows whether the printer prints the human readable line below the bar code. Human readable characters are always printed with OCR-B font of 10 pitch and all the current character style enhancements are masked. The default setting is determined by the bar code mode selected by ‘t’ or ‘T’.

Quiet zone

n = ‘onnn’ or ‘Onnn’ (nnn = 0 ~ 32767)

Quiet zone is the space on both sides of the bar codes. Its width can be shown using the units that are set by the ‘u’ of ‘U’ parameter. (For the description of ‘u' or ‘U' parameter, see the next section.) The default setting of the quiet-zone width is 1 inch.

Bar code, expanded character unit, line block drawing and box drawing

n = ‘u0’ or ‘U0’	mm (preset)
n = ‘u1’ or ‘U1’	1/10
n = ‘u2’ or ‘U2’	1/100
n = ‘u3’ or ‘U3’	1/12
n = ‘u4’ or ‘U4’	1/120
n = ‘u5’ or ‘U5’	1/10 mm
n = ‘u6’ or ‘U6’	1/300
n = ‘u7’ or ‘U7’	1/720

This parameter shows the measurement units of X-axis offset, Y-axis offset, and bar code height.

Bar code, expanded character, line block drawing and box drawing offset in X-axis

n = ‘xnnn’ or ‘Xnnn’

This parameter shows the offset from the left margin in the ‘u’- or ‘U’-specified unit.

Bar code & expanded character offset in Y-axis

n = ‘ynnn’ or ‘Ynnn’

This parameter shows the downward offset from the current print position in the ‘u’- or ‘U’-specified unit.

Bar code, expanded character, line block drawing and box drawing height

n = ‘hnnn’, ‘Hnnn’, ‘dnnn’, or ‘Dnnn’

1 EAN13, EAN8, UPC-A, ISBN (EAN13, EAN8, UPC-A), ISBN (UPC-E): 22 mm

2 UPC-E: 18 mm

3 Others: 12 mm

Expanded characters → 2.2 mm (preset)

Line block drawing and box drawing → 1 dot

This parameter shows the height of bar codes or expanded characters as shown above. It can start with ‘h’, ‘H’, ‘d’, or ‘D’. The height of bar codes is shown in the ‘u’- or ‘U’-specified unit. The default setting of the bar code height (12 mm, 18 mm or 22 mm) is determined by the bar code mode selected by ‘t’ or ‘T’.

Expanded character width, line block drawing and box drawing

n = ‘wnnn’ or ‘Wnnn’

Expanded character → 1.2 mm

Line block drawing and box drawing → 1 dot

This parameter shows the width of expanded characters as shown above.

Expanded character rotation

n = ‘a0’ or ‘A0’	‘Upright (preset)
n = ‘a1’ or ‘A1’	‘Rotated 90 degrees
n = ‘a2’ or ‘A2’	‘Upside down, rotated 180 degrees
n = ‘a3’ or ‘A3’	‘Rotated 270 degrees

Bar code data start

n = ‘b’ or ‘B’

Data that follows ‘b’ or ‘B’ is read in as bar code data. Bar code data must end with the ‘ \ ’ code (5CH), which also ends this command. The acceptable bar code data is determined by the bar code mode selected by ‘t’ or ‘T’.

- When CODE 39 is chosen with the parameter ‘t0’ or ‘T0’

  Forty three characters ‘0’ to ‘9’, ‘A’ to ‘Z’, ‘-’, ‘ . ’, ‘ (space)’, ‘$’, ‘ / ’, ‘+’, and ‘%’ can be accepted as bar code data. Other characters will cause a data error. The number of characters for bar codes is not limited. The bar code data automatically starts and ends with an asterisk ‘ * ’ (start character and stop character). If the received data has an asterisk ‘ * ’ at the beginning or end, the asterisk is regarded as a start character or stop character.

- When Interleaved 2 of 5 is selected with the parameter ‘t1’ or ‘T1’:

  Ten numerical characters ‘0’ to ‘9’ can be accepted as bar code data. Other characters cause a data error. The number of characters for bar codes is not limited. This mode of bar codes needs even characters. If the bar code data has odd characters, ‘0’ is automatically added to the end of the bar code data.

- When FIM (US-Post Net) is selected with the parameter ‘t3’ or ‘T3’

  Characters ‘A’ to ‘D’ are valid and one digit of data can be printed. Upper-case and lower-case alphabet characters can be accepted.

- When Post Net (US-Post Net) is selected with the parameter ‘t4’ or ‘T4’

  Numbers ‘0’ to ‘9' can be data and it must end with a check digit. ‘?’ can be used instead of the check digit.

- When EAN 8, EAN 13, or UPC A is selected with the parameter ‘t5’ or ‘T5’

  Ten numbers ‘0’ to ‘9’ can be accepted as bar code data. The number of characters for bar codes is limited as follows:

  EAN 8: Total 8 digits (7 digits + 1 check digit)

  EAN 13: Total 13 digits (12 digits + 1 check digit)

  UPC A: Total 12 digits (11 digits + 1 check digit)

  A number of characters other than those stated above will cause a data error that results in the bar code data being printed as normal print data. If the check digit is not correct, the printer decides the correct check digit automatically so that the correct bar code data will be printed. When EAN13 is selected, adding ‘+’ and a two-digit or five-digit number after the data can create an add-on code.

- When UPC-E is selected with the parameter ‘t6’ or ‘T6’:

  The numbers ‘0’ to ‘9’ can be accepted as bar code data.

Eight digits [1] [2]	(standard format) The first character must be ‘0’ and the data must end with a check digit. Total eight digits = ‘0’ plus 6 digits plus 1 check digit.
Six digits [2]	The first character and the last check digit are removed from the eight digit data.

[1] ‘?’ can be used instead of a check digit.

[2] Adding ‘+’ and two-digit or five-digit number after the data creates an add-on code.

- When Codebar is chosen with the parameter ‘t9’ or ‘T9’

  Characters ‘0’ to ‘9’, ‘-’, ‘ . ’, ‘$’, ‘/’, ‘+’, ‘ : ’ can be printed. Characters ‘A’ to ‘D’ can be printed as a start-stop code, which can be upper case or lower case. If there is no start-stop code, errors will happen. A check digit cannot be added and using ‘?’ causes errors.

- When Code 128 Set A, Set B, or Set C is selected with the parameter ‘t12’ or ‘T12’, ‘t13’ or ‘T13’, or ‘t14’ or ‘T14’

  Code 128 sets A, B and C can be individually selected. Set A shows characters Hex 00 to 5F. Set B includes characters Hex 20 to 7F. Set C includes the pairs 00 to 99. Switching is allowed between the code sets by sending %A, %B, or %C. FNC 1, 2, 3, and 4 are produced with %1, %2, %3, and %4. The SHIFT code, %S, allows temporary switching (for one character only) from set A to set B and vice versa. The ‘%’ character can be encoded by sending it twice.

- When ISBN (EAN) is selected with the parameter ‘t130’ or ‘T130’

  The same rules apply as for ‘t5’ or ‘T5’.

- When ISBN (UPC-E) is selected with the parameter ‘t131’ or ‘T131’:

  The same rules apply as for ‘t6’ or ‘T6’.
- When EAN 128 set A, set B or set C is selected with the parameter ‘t132’ or ‘T132’, ‘t133’ or ‘T133’ or ‘t134’ or ‘T134’

  The same rules apply as for ‘t12’ or ‘T12’, ‘t13’ or ‘T13’, or ‘t14’ or ‘T14’.

Box drawing

ESC i ... E (or e)

‘E’ or ‘e’ is a terminator.

Line block drawing

ESC i ... V (or v)

‘V’ or ‘v’ is a terminator.

Expanded character data start

n = ‘l’ or ‘L’

Data that follows ‘l’ or ‘L’ is read as expanded character data (or labeling data). Expanded character data must end with the ‘ \ ’ code (5CH), which also ends this command.

A

Example Program Listings

```
WIDTH "LPT1:",255
'CODE 39
LPRINT CHR$(27);"it0r1s0o0x00y00bCODE39?\";
'Interleaved 2 of 5
LPRINT CHR$(27);"it1r1s0o0x00y20b123456?\";
'FIM
LPRINT CHR$(27);"it3r1o0x00y40bA\";
'Post Net
LPRINT CHR$(27);"it4r1o0x00y60b1234567890?\";
'EAN-8
LPRINT CHR$(27);"it5r1o0x00y70b1234567?\";
'UPC-A
LPRINT CHR$(27);"it5r1o0x50y70b12345678901?\";
'EAN-13
LPRINT CHR$(27);"it5r1o0x100y70b123456789012?\";
'UPC-E
LPRINT CHR$(27);"it6r1o0x150y70b0123456?\";
```

```
'Codabar
LPRINT CHR$(27);"it9r1s0o0x00y100bA123456A\";
'Code 128 set A
LPRINT CHR$(27);"it12r1o0x00y120bCODE128A12345?\";
'Code 128 set B
LPRINT CHR$(27);"it13r1o0x00y140bCODE128B12345?\";
'Code 128 set C
LPRINT CHR$(27);"it14r1o0x00y160b";CHR$(1);CHR$(2);"?\";
'ISBN(EAN)
LPRINTCHR$(27);"it130r1o0x00y180b123456789012?+12345\";
'EAN 128 set A
LPRINT CHR$(27);"it132r1o0x00y210b1234567890?\";
LPRINT CHR$(12)
END
```

B Appendix

Frequently asked questions (FAQs)

The Brother Solutions Center is our one-stop resource for all your printer needs. You can download the latest drivers, software and utilities, read FAQs and troubleshooting tips to learn how to get the most from your Brother product.

http://solutions.brother.com

You can check here for Brother driver updates.

Customer Service

Visit http://www.brother-cn.net for contact information on your local Brother office.

Internet Addresses

Brother Global Web Site: http://www.brother.com

For Frequently Asked Questions (FAQs), Product Support and Technical Questions, and Driver Updates and Utilities: http://solutions.brother.com

Important information: regulations

Radio interference (220 to 240 volt model only)

This printer follows EN55022 (CISPR Publication 22)/Class B.

Before you use this product, make sure that you use one of the following interface cables.

1 A shielded parallel interface cable with twisted-pair conductors and that it is marked IEEE 1284 compliant (HL-4050CDN only).

2 A USB cable.

The cable must not be more than 2 meters long.

IEC 60825-1 specification (220 to 240 volt model only)

This printer is a Class 1 laser product as defined in IEC 60825-1 +A2:2001 specifications. The label shown below is attached in countries where it is needed.

This printer has a Class 3B laser diode which produces invisible laser radiation in the laser unit. You should not open the laser unit under any circumstances.

Caution

Use of controls or adjustments or performance of procedures other than those specified in this User's Guide may result in hazardous invisible radiation exposure.

Internal laser radiation

Maximum radiation power:	25 mW
Wave length:	780 - 800 nm
Laser class:	Class 3B

IMPORTANT - for your safety

To ensure safe operation, the supplied three-pin plug must be inserted only into a standard three-pin power outlet that is properly grounded through the standard electrical wiring.

Extension cords used with this printer must be three-pin plug type and correctly wired to provide grounding. Incorrectly wired extension cords may cause personal injury and equipment damage.

The fact that the equipment operates satisfactorily does not imply that the power is grounded and that the installation is completely safe. For your safety, if in any doubt about the effective grounding of the power, call a qualified electrician.

This product should be connected to an AC power source within the range indicated on the rating label. DO NOT connect it to a DC power source. If you are not sure, contact a qualified electrician.

Disconnect device

You must install this printer near a power outlet that is easily accessible. In case of an emergency, you must disconnect the power cord from the power outlet to shut off the power completely.

Caution for LAN connection

Connect this product to a LAN connection that is not subjected to overvoltages.

C Index

Symbols

+ or - buttons 70

A

Accessories tab 44
Alarm LED 71
Auto Registration 88
Automatic duplex printing 24
Automatic Emulation Selection 67
Automatic Interface Selection 67

B

Back button 70
Back light 71
Bar code control 179
Belt unit 109
Booklet printing 25
BRAdmin Light 66
BRAdmin Professional 66
BR-Script 3 mode 67
BR-Script3 ..... 46, 47, 167
Buttons 69

C

Calibration 87
Call Service messages 142, 143
Cancel button 69
Character sets 177
Color Correction 83
Computer requirements 173
Consumable items 94
Control panel 68, 76, 170
Control panel LCD menu 77
Corona wire 100, 125, 127, 130

D

Data LED 71
Default settings 86
Device options 41
Dimensions 172
DIMM 91
Direct Print 29, 83, 170
DOS 167
Driver Deployment Wizard 66
Drum unit 103
Duplex printing 21

E

Emulation 169
Emulation modes 67
Envelopes 8, 17
Error message 141

F

Fonts 169

G

General Setup 79
Go button 69

H

HP LaserJet mode 67

I

Interface 169

J

Jam duplex 148
Jam in MP tray 146
Jam inside printer 154
Jam rear 151

L

LCD (liquid crystal display) 68, 71
LED (light-emiting diode) 71
Linux 33
Lower tray 90

M

Machine Info. 77
Macintosh® 54, 167
Maintenance messages 142
Manual duplex printing 21
Manual Registration 89
Media specifications 171
Media type 6
Memory 91, 169
Menu settings 77
Multi-purpose tray 14, 22

N

Network 66
Network connectivity 169
NETWORK menu 82

P

Paper 6, 174
Paper handling 171
Paper jams 145
Paper Tray 78
Parallel interface 67
PCL printer driver 36
PictBridge 26, 84
Power supply 5
Print Menu 80
Print quality 39
Printer driver 36, 47, 64, 170
Processor 169

R

Reprint 42, 56
Reprint button 69, 70
Reset Menu 82

S

Scanner window 123
Secure data 74
SO-DIMM 90
Software 66
Specifications 168
Symbol 177

T

TCP/IP 82
Toner cartridge 96
Trademarks iv
Troubleshooting 140

U

Unprintable area 9
USB interface 67
Utilities 170

W

Waste toner pack 114
Watermark 41
Web BRAdmin 66
Weights 172
Windows® 36

C