brother®

USER'S GUIDE

MFC-685CW

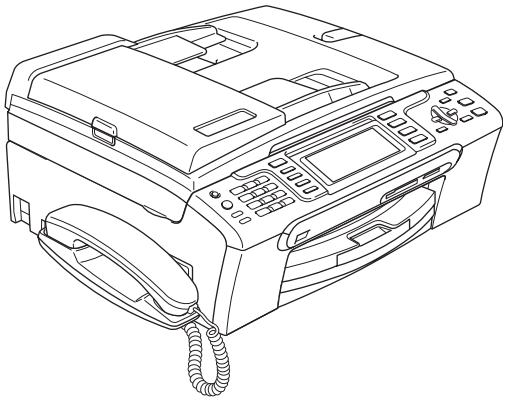

Approval Information and Compilation and Publication Notice

THIS EQUIPMENT IS DESIGNED TO WORK WITH A TWO WIRE ANALOGUE PSTN LINE FITTED WITH THE APPROPRIATE CONNECTOR.

APPROVAL INFORMATION

Brother advises that this product may not function correctly in a country other than where it was originally purchased, and does not offer any warranty in the event that this product is used on public telecommunication lines in another country.

Compilation and Publication Notice

Under the supervision of Brother Industries Ltd., this manual has been compiled and published, covering the latest product descriptions and specifications.

The contents of this manual and the specifications of this product are subject to change without notice.

Brother reserves the right to make changes without notice in the specifications and materials contained herein and shall not be responsible for any damages (including consequential) caused by reliance on the materials presented, including but not limited to typographical and other errors relating to the publication.

Use only GENUINE brother supplies

Brother multifunction machines are designed to work ink of a particular specification and work to a level of optimum performance when used with genuine Brother ink cartridges. Brother cannot guarantee this optimum performance if ink or ink cartridges of other specifications are used. Brother does not therefore recommend the use of cartridges other than genuine Brother cartridges with this machine or the refilling of empty cartridges with ink from other sources. If damage is caused to the print head or other parts of this machine as a result of the use of ink or ink cartridges other than genuine Brother products due to the incompatibility or lack of suitability of those products with this machine, any repairs required as a result will not be covered by the warranty.

Table of Contents

Section I General

1 General Information 2

Using the documentation 2
Symbols and conventions used in the documentation 2
Accessing the Software User's Guide and Network User's Guide 3
Viewing Documentation 3
Control panel overview 6
LCD display indications 8
Basic Operations 8

2 Loading documents and paper 9

Loading documents 9
Using the ADF 9
Using the scanner glass 10
Scannable area 10
Acceptable paper and other media 11
Recommended media 11
Handling and using media 11
Choosing the right media 12
Loading paper and other media 14
Loading envelopes and post cards 16
Loading photo paper 17
Removing small printouts from the machine 18
Printable area 19

3 General setup 20

Power Save mode 20
Putting your machine in Power Save mode 20
Bringing your machine out of Power Save mode 20
Power Save setting 20
Mode Timer 21
Paper settings 22
Paper Type 22
Paper Size 22
Volume Settings 23
Ring Volume 23
Beeper Volume 23
Speaker Volume 23
LCD display 24
LCD Contrast 24
Setting the backlight brightness 24
Setting the Dim Timer for the backlight 24
Setting the Off Timer 25
Setting the Wallpaper 25

LCD Language 25
Setting the Fax Logic 26

4 Security features 27

Memory Security 27
Setting and changing the memory security password 27
Turning the memory security on/off 28

Section II Fax

5 Sending a fax 30

Entering Fax mode 30
Faxing from the ADF 30
Faxing from the scanner glass 30
Faxing Letter size documents from the scanner glass 31
Colour fax transmission 31
Cancelling a fax in progress 31
Broadcasting (Monochrome only) 32
Cancelling a Broadcast in progress 32
Additional sending operations 33
Sending faxes using multiple settings 33
Contrast 33
Changing fax resolution 34
Dual access (Monochrome only) 34
Real time transmission 34
Overseas Mode 35
Delayed Faxing (Monochrome only) 35
Delayed Batch Transmission (Monochrome only) 35
Checking and cancelling waiting jobs 35
Setting your changes as a new default 36
Restoring all settings to the factory settings 36
Sending a fax manually 36
Sending a fax at the end of a conversation 36
Out of Memory message 36

6 Receiving a Fax 38

Receive modes 38
Choosing the Receive Mode 38
Using receive modes 39
Fax only 39
Fax/Tel 39
Manual 39
TAD (Message Center) 39
Receive mode settings 40
Ring Delay 40
F/T Ring Time (Fax/Tel mode only) 40
Fax Detect 41

Additional receiving operations 42
Printing a reduced incoming fax 42
Receiving faxes into memory (Monochrome only) 42
Receiving a fax at the end of a conversation 43
Printing a fax from the memory 43

7 Telephone and External devices 44

Voice operations 44
Making a telephone call 44
Answering calls with the Speaker Phone 44
Hold 44
Tone or Pulse 45
Fax/Tel mode 45
Fax/Tel mode in Power Save condition 45
Phone line services 45
Do you have Voice Mail? 45
Telephone Service 46
Caller ID (Caller IDentification) (not available in certain area) 46
Advantages of Caller ID 46
Setup Method 46
Caller ID feature 47
Viewing Caller ID List 47
Connecting an external TAD (telephone answering device) 48
Connections 49
Recording outgoing message (OGM) on an external TAD 49
Multi-line connections (PBX) 49
External and extension phones 50
Connecting an external or extension telephone 50
Operation from extension telephones 50
Using a cordless external telephone 50
Using remote codes 51

8 Dialling and storing numbers 52

How to Dial 52
Manual dialling 52
Speed Dialling 52
Search 52
Fax Redial 53
Outgoing Call 53
Caller ID history 53
Storing numbers 54
Storing a pause 54
Storing Speed Dial numbers 54
Changing Speed Dial names or numbers 56
Setting up groups for broadcasting 57
Combining Quick Dial numbers 58

9 Digital TAD 59

TAD-Mode for internal TAD 59
Setting up the TAD 59
Outgoing message (OGM) 59
Fax/Tel OGM (Announcement) 60
Activating TAD mode 60
Managing your messages 61
Message indicator 61
Playing voice messages 61
Erasing incoming messages 61
Additional TAD operations 62
Setting maximum time for incoming messages 62
Setting toll saver 62
ICM Recording Monitor 62
Recording a conversation 62

10 Advanced fax operations (Monochrome only) 63

Fax Forwarding 63
Fax Storage 64
Fax Preview 64
How to preview a received fax 64
How to preview an outgoing fax 66
PC Fax Receive 66
Changing the destination PC 67
Turning off Advanced Fax Operations 68
Changing Advanced Fax Operations 68
Remote Retrieval 69
Setting a Remote Access Code 69
Using your Remote Access Code 69
Remote Fax commands 70
Retrieving fax messages 71
Changing your Fax Forwarding number 71

11 Printing Reports 72

Fax reports 72
Transmission Verification Report 72
Fax Journal (activity report) 72
Reports 73
How to print a report 73

12 Polling 74

Polling overview 74
Polling receive 74
Setup to receive polling 74
Setup to receive polling with secure code 74
Setup to receive delayed polling 75
Sequential polling (Monochrome only) 75
Polled transmit (Monochrome only) 76

Setup for polled transmit 76
Setup for polled transmit with secure code 76

Section III Copy

13 Making copies 78

How to copy 78
Entering Copy mode 78
Making a single copy 78
Making multiple copies 78
Stop copying 78
Copy settings 79
Changing copy speed and quality 79
Enlarging or reducing the image copied 79
Making N in 1 copies or a poster (page layout) 80
Sorting copies using the ADF 81
Adjusting Brightness, Contrast and Colour 81
Paper Options 82
Setting your changes as a new default 83
Restoring all settings to the factory settings 83
‘Out of Memory’ message 83

Section IV Direct Photo Printing

14 Printing photos from a memory card or USB Flash memory drive 86

PhotoCapture Center™ Operations 86
Printing from a memory card or USB Flash memory drive without a PC 86
Scanning to a memory card or USB Flash memory drive without a PC 86
Using PhotoCapture Center™ from your computer 86
Using a memory card or USB Flash memory drive 86
Memory cards or a USB Flash memory drive folder structure 87
Getting started 88
Entering PhotoCapture mode 89
Print Images 89
View Photo(s) 89
Print Index (Thumbnails) 90
Print Photos 90
Photo Effects 91
Search by Date 93
Print All Photos 94
Slide show 94
Trimming 95
DPOF printing 95
PhotoCapture Center™ print settings 96
Print Speed and Quality 97
Paper options 97
Adjusting Brightness, Contrast and Colour 98

Cropping 99
Borderless printing 99
Setting your changes as a new default 99
Restoring all settings to the factory settings 99
Scan to a memory card or USB Flash memory drive 100
Entering Scan mode 100
How to scan to a memory card or USB Flash memory drive 100
Understanding the Error Messages 101

15 Printing photos from a camera 102

Printing photos directly from a PictBridge camera 102
PictBridge requirements 102
Setting your digital camera 102
Printing Images 103
DPOF printing 103
Printing photos directly from a digital camera (without PictBridge) 104
Printing Images 104
Understanding the Error Messages 105

Section V Software

16 Software and Network features 108

Section VI Appendixes

A Safety and Legal 110

Choosing a location 110
To use the machine safely 111
Important Information 115
Important Safety Instructions 115
IMPORTANT-For Your Safety 116
Legal limitations for copying 117
Trademarks 118

B Troubleshooting and Routine Maintenance 119

Troubleshooting 119
If you are having difficulty with your machine 119
Error messages 125
Error animation 129
Transferring your faxes or Fax Journal report 129
Document jam 130
Printer jam or paper jam 131
Dial Tone detection 133
Telephone line interference 133
Routine maintenance 134

Replacing the ink cartridges 134
Cleaning the outside of the machine 136
Cleaning the scanner 137
Cleaning the machine printer platen 137
Cleaning the paper pick-up roller 138
Cleaning the print head 139
Checking the print quality 139
Checking the print alignment 140
Checking the ink volume 141
Uninstalling and installing the handset and handset cradle 141
Machine Information 142
Checking the serial number 142
Packing and shipping the machine 143

C Menu and Features 145

On-screen programming 145
Menu table 145
Memory storage 145
Mode and menu keys 145
Menu table 146
Entering Text 160

D Specifications 161

General 161
Print media 163
Fax 164
Digital TAD 166
Copy 167
PhotoCapture Center™ 168
PictBridge 169
Scanner 170
Printer 171
Interfaces 172
Computer requirements 173
Consumable items 174
Network (LAN) 175

E Glossary 176

F Index 180

Section I

General

General Information 2
Loading documents and paper 9
General setup 20
Security features 27

1 General Information

Using the documentation

Thank you for buying a Brother machine! Reading the documentation will help you make the most of your machine.

Symbols and conventions used in the documentation

The following symbols and conventions are used throughout the documentation.

Bold	Bold typeface identifies specific keys on the machine's control panel.
Italics	Italicized typeface emphasizes an important point or refers you to a related topic.
`Courier New`	Text in the Courier New font identifies messages on the LCD of the machine.

Warnings tell you what to do to prevent possible personal injury.

Electrical Hazard icons alert you to possible electrical shock.

Cautions specify procedures you must follow or avoid to prevent possible damage to the machine or other objects.

Notes tell you how you should respond to a situation that may arise or give tips about how the operation works with other features.

Improper Setup icons alert you to devices and operations that are not compatible with the machine.

Accessing the Software User's Guide and Network User's Guide

This User's Guide does not contain all the information about the machine such as how to use the advanced features of the Printer, Scanner, PC Fax and Network. When you are ready to learn detailed information about these operations, read the **Software User's Guide** and **Network User's Guide** that are on the CD-ROM.

Viewing Documentation

Viewing Documentation (For Windows®)

To view the documentation, from the **Start** menu, point to **Brother**, **MFC-XXXX** (where XXXX is your model name) from the programs group, and then choose **User's Guides in HTML format**.

If you have not installed the software, you can find the documentation by following the instructions below:

1. Turn on your PC. Insert the Brother CD-ROM into your CD-ROM drive.
2. If the model name screen appears, click your model name.
3. If the language screen appears, click your language. The CD-ROM main menu will appear.

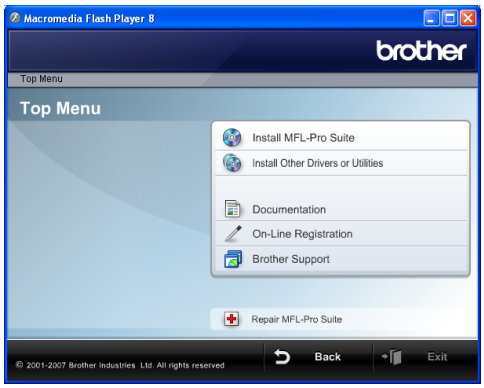

Note

If this window does not appear, use Windows® Explorer to run the start.exe program from the root directory of the Brother CD-ROM.

4. Click **Documentation**.
5. Click the documentation you want to read.
   - **HTML documents**: **Software User's Guide** and **Network User's Guide** in HTML format.

     This format is recommended for viewing on your computer.
   - **PDF documents**: **User's Guide** for stand-alone operations, **Software User's Guide** and **Network User's Guide** in PDF format.

     This format is recommended for printing the manuals. Click to go to the Brother Solutions Center, where you can view or download the PDF documents. (Internet access and PDF Reader software are required.)

How to find Scanning instructions

There are several ways you can scan documents. You can find the instructions as follows:

Software User's Guide

- *Scanning* (For Windows® 2000 Professional/Windows® XP and Windows Vista™)
- *ControlCenter3* (For Windows® 2000 Professional/Windows® XP and Windows Vista™)
- *Network Scanning*

How to find Network setup instructions

Your machine can be connected to a wireless or wired network. You can find basic setup instructions in the Quick Setup Guide. For more information, or if your access point supports SecureEasySetup™ or Aoss™, please see the Network User's Guide.

Viewing Documentation (For Macintosh®)

1. Turn on your Macintosh®. Insert the Brother CD-ROM into your CD-ROM drive. The following window will appear.

2. Double-click the **Documentation** icon.
3. Double-click your language folder.
4. Double-click the top page file to view the **Software User's Guide** and **Network User's Guide** in HTML format.
5. Click the documentation you want to read:
   - **Software User's Guide**
   - **Network User's Guide**

How to find Scanning instructions

There are several ways you can scan documents. You can find the instructions as follows:

Software User's Guide

- *Scanning* (For Mac OS® X 10.2.4 or greater)
- *ControlCenter2* (For Mac OS® X 10.2.4 or greater)
- *Network Scanning* (For Mac OS® X 10.2.4 or greater)

How to find Network setup instructions

Your machine can be connected to a wireless or wired network. You can find basic setup instructions in the Quick Setup Guide. For more information, or if your access point supports SecureEasySetup™ or Aoss™, please see the Network User's Guide.

Control panel overview

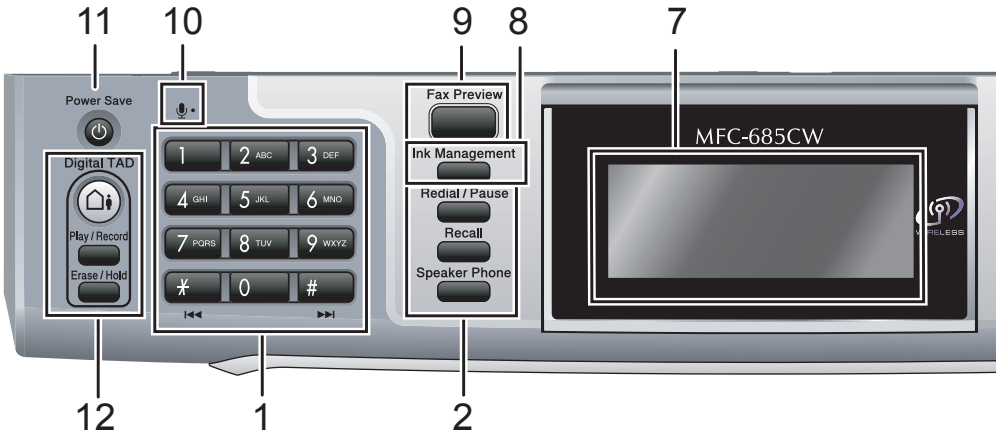

1 Dial Pad

Use these keys to dial telephone and fax numbers and as a keyboard for entering information into the machine.

The **#** key lets you temporarily switch the dialling mode during a telephone call from Pulse to Tone.

2 Fax and telephone keys

- **Redial/Pause**

  Redials one of the last 30 numbers called. It also inserts a pause when programming quick dial numbers.

- **Hold**

  Puts the current phone call on hold.

- **Speaker Phone**

  Lets you speak to another party without lifting the handset.

3 Mode keys:

- **Fax**

  Lets you access Fax mode.

- **Scan**

  Lets you access Scan mode.

- **Copy**

  Lets you access Copy mode.

- **PhotoCapture**

  Lets you access PhotoCapture Center™ mode.

4 Menu keys:

- **Volume keys**

  ◄ ►

  In Fax mode, you can press these keys to adjust the ring volume.

- **▲ Speed Dial**

  Lets you look up and dial numbers that are stored in the memory.

- ◄ or ►

  Press to scroll backward or forward to a menu selection.

  Also, press to choose options.

- ▲ or ▼

  Press to scroll through the menus and options.

- **Menu**

  Access the main menu.

- **OK**

  Choose a setting.

- **Clear/Back**

  Press to cancel the current setting.

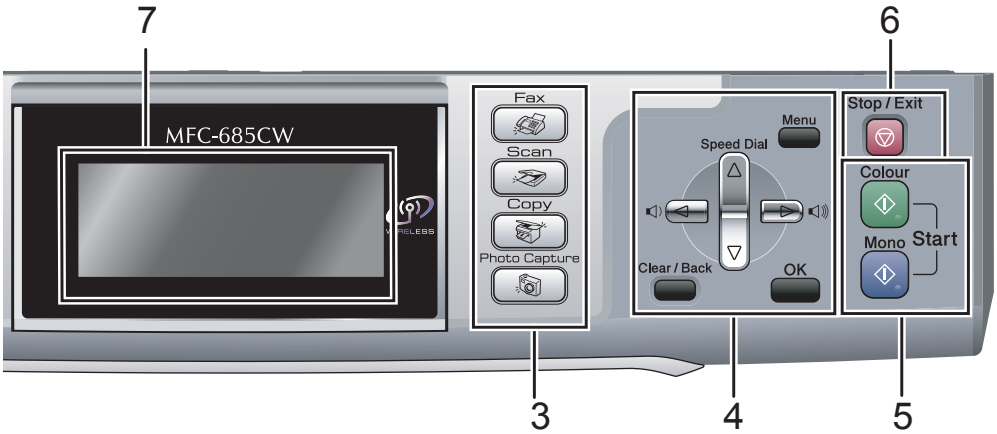

5 Start keys:

- **Colour Start**

  Lets you start sending faxes or making copies in full colour. Also lets you start a scanning operation (in colour or mono, depending on the scanning setting in the ControlCenter software).

- **Mono Start**

  Lets you start sending faxes or making copies in monochrome. Also lets you start a scanning operation (in colour or mono depending on the scanning setting in the ControlCenter software).

6 Stop/Exit

Stops an operation or exits from a menu.

7 LCD (liquid crystal display)

Displays messages on the screen to help you set up and use your machine.

Also, you can adjust the angle of the LCD display by lifting it.

8 Ink Management

Lets you clean the print head, check the print quality, and check the available ink volume.

9 Fax Preview

Lets you preview incoming and outgoing faxes on the LCD.

10 Microphone

Picks up your voice when you speak to another party using **Speaker Phone**.

11 Power Save

Lets you put the machine into Power Save mode.

12 TAD keys:

- **Digital TAD**

  Turns the Telephone Answering Device (TAD) on or off. Will also flash if you have new messages.

- **Play/Record**

  Plays voice messages stored in the memory. Will also let you record telephone calls.

- **Erase**

  Deletes voice messages.

LCD display indications

The LCD shows the current machine status when the machine is idle.

1 Wireless Status

A four level indicator shows the current wireless signal strength if you are using a wireless connection.

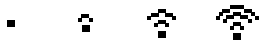

0 Max

2 Memory Status

Lets you see the available memory in the machine.

3 Ink indicator

Lets you see the available ink volume.

4 Current Receive Mode

Lets you see the current receive mode.

- `Fax` (Fax only)
- `F/T` (Fax/Tel)
- `TAD` (Msg Ctr)
- `Mnl` (Manual)

5 Voice messages in the machine's memory.

Shows how many received voice messages are in the memory.

6 Faxes in memory

Shows how many received faxes are in the memory.

Basic Operations

The following steps show how to change a setting in the machine. In this example the Mode Timer setting is changed from 2 minutes to 30 seconds.

1. Press **Menu**.

2. Press ▲ or ▼ to choose `General Setup`.

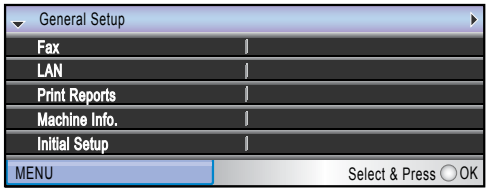

Press **OK**.

3. Press ▲ or ▼ to choose `Mode Timer`.

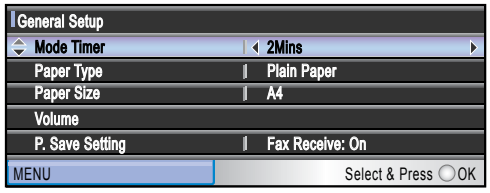

4. Press ◀ or ▶ to choose `30Secs`.

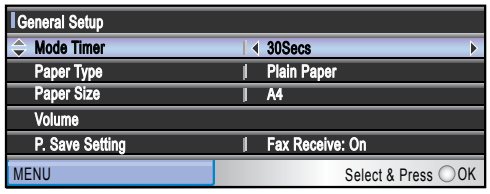

Press **OK**.
You can see the current setting on the LCD:

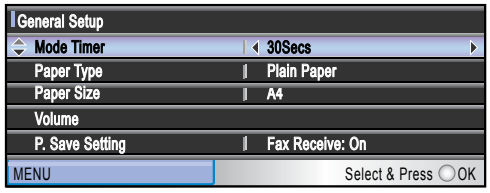

5. Press **Stop/Exit**.

2 Loading documents and paper

Loading documents

You can send a fax, make copies, and scan from the ADF (automatic document feeder) and from the scanner glass.

Using the ADF

The ADF can hold up to 10 pages and feeds each sheet individually. Use standard 80 g/m^2 paper and always fan the pages before putting them in the ADF.

Recommended environment

Temperature:	20° C to 30° C
Humidity:	50% to 70%
Paper:	80 g/m^2 A4

Document Sizes Supported

Length:	148 to 355.6 mm
Width:	148 to 215.9 mm
Weight:	64 to 90 g/m^2

How to load documents

CAUTION

DO NOT pull on the document while it is feeding.

DO NOT use paper that is curled, wrinkled, folded, ripped, stapled, paper clipped, pasted or taped.

DO NOT use cardboard, newspaper or fabric.

- Make sure documents written with ink are completely dry.

1. Fan the pages well. Make sure you put the documents **face down, top edge first** in the ADF until you feel them touch the feed roller.
2. Adjust the paper guides to fit the width of your documents.
3. Unfold the ADF Document Output Support Flap (1).

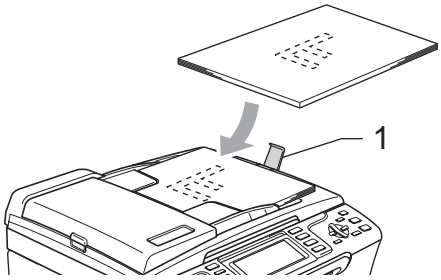

CAUTION

DO NOT leave thick documents on the scanner glass. If you do this, the ADF may jam.

Using the scanner glass

You can use the scanner glass to fax, copy or scan pages of a book or one page at a time.

Document Sizes Supported

Length:	Up to 297 mm
Width:	Up to 215.9 mm
Weight:	Up to 2 kg

How to load documents

Note

To use the scanner glass, the ADF must be empty.

1. Lift the document cover.
2. Using the document guidelines on the left, centre the document face down on the scanner glass.

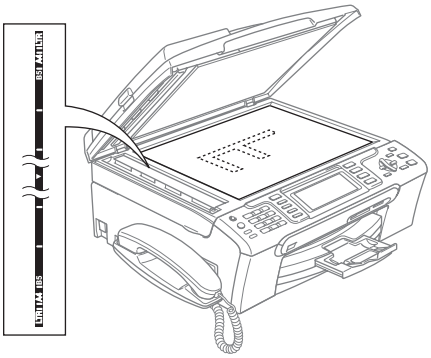

3. Close the document cover.

CAUTION

If you are scanning a book or thick document, DO NOT slam the cover down or press on it.

Scannable area

The scannable area depends on the settings in the application you are using. The figures below show the areas you cannot scan on paper.

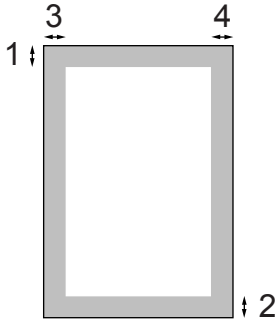

Usage	Document Size	Top (1) Bottom (2)	Left (3) Right (4)
Fax	Letter	3 mm	4 mm
	A4	3 mm	1 mm
Copy	Letter	3 mm	3 mm
	A4	3 mm	3 mm
Scan	Letter	3 mm	3 mm
	A4	3 mm	0 mm

Acceptable paper and other media

The print quality can be affected by the type of paper you use in the machine.

To get the best print quality for the settings you have chosen, always set the Paper Type to match the type of paper you load.

You can use plain paper, inkjet paper (coated paper), glossy paper, transparencies and envelopes.

We recommend testing various paper types before buying large quantities.

For best results, use Brother paper.

- When you print on inkjet paper (coated paper), transparencies and photo paper, be sure to choose the correct media in the '**Basic**' tab of the printer driver or in the Paper Type setting of the menu. (See *Paper Type* on page 22.)
- When you print on Brother photo paper, load the instruction sheet included with the photo paper in the paper tray first, and then put the photo paper on top of the instruction sheet.
- When you use transparencies or photo paper, remove each sheet at once to prevent smudging or paper jams.
- Avoid touching the printed surface of the paper immediately after printing; the surface may not be completely dry and may stain your fingers.

Recommended media

To get the best print quality, we suggest using Brother paper. (See table below.)

If Brother paper is not available in your country, we recommend testing various papers before purchasing large quantities.

We recommend using '3M Transparency Film' when you print on transparencies.

Brother paper

Paper Type	Item
A4 Plain	BP60PA
A4 Glossy Photo	BP61GLA
A4 Inkjet (Matte)	BP60MA
10 x 15 cm Glossy Photo	BP61GLP

Handling and using media

- Store paper in its original packaging, and keep it sealed. Keep the paper flat and away from moisture, direct sunlight and heat.
- The coated side of photo paper is shiny. Avoid touching the shiny (coated) side. Load photo paper with the shiny side facing down.
- Avoid touching either side of transparencies because they absorb water and perspiration easily, and this may cause decreased output quality. Transparencies designed for laser printers/copiers may stain your next document. Use only transparencies recommended for inkjet printing.

Improper Setup

DO NOT use the following kinds of paper:

- Damaged, curled, wrinkled, or irregularly shaped paper

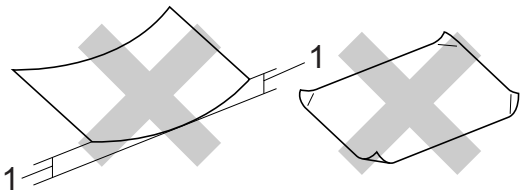

1 2 mm or longer

- Extremely shiny or highly textured paper
- Paper already printed on by a printer
- Paper that cannot be arranged uniformly when stacked
- Paper made with a short grain

Paper capacity of the output paper tray

Up to 50 sheets of 20 lb Letter or 80 g/m^2 A4 paper.

- Transparencies or photo paper must be picked up from the output paper tray one page at a time to avoid smudging.

Choosing the right media

Paper type and size for each operation

Paper Type	Paper Size		Usage			
			Fax	Copy	Photo Capture	Printer
Cut Sheet	Letter	216 × 279 mm (8 1/2 × 11 in.)	Yes	Yes	Yes	Yes
	A4	210 × 297 mm (8.3 × 11.7 in.)	Yes	Yes	Yes	Yes
	Legal	216 × 356 mm (8 1/2 × 14 in.)	Yes	Yes	–	Yes
	Executive	184 × 267 mm (7 1/4 × 10 1/2 in.)	–	–	–	Yes
	JIS B5	182 × 257 mm (7.2 × 10.1 in.)	–	–	–	Yes
	A5	148 × 210 mm (5.8 × 8.3 in.)	–	Yes	–	Yes
	A6	105 × 148 mm (4.1 × 5.8 in.)	–	–	–	Yes
Cards	Photo	10 × 15 cm (4 × 6 in.)	–	Yes	Yes	Yes
	Photo L	89 × 127 mm (3 1/2 × 5 in.)	–	–	–	Yes
	Photo 2L	13 × 18 cm (5 × 7 in.)	–	–	Yes	Yes
	Index Card	127 × 203 mm (5 × 8 in.)	–	–	–	Yes
	Post Card 1	100 × 148 mm (3.9 × 5.8 in.)	–	–	–	Yes
	Post Card 2 (Double)	148 × 200 mm (5.8 × 7.9 in.)	–	–	–	Yes
Envelopes	C5 Envelope	162 × 229 mm (6.4 × 9 in.)	–	–	–	Yes
	DL Envelope	110 × 220 mm (4.3 × 8.7 in.)	–	–	–	Yes
	COM-10	105 × 241 mm (4 1/8 × 9 1/2 in.)	–	–	–	Yes
	Monarch	98 × 191 mm (3 7/8 × 7 1/2 in.)	–	–	–	Yes
	JE4 Envelope	105 × 235 mm (4.1 × 9.3 in.)	–	–	–	Yes
Transparencies	Letter	216 × 279 mm (8 1/2 × 11 in.)	–	Yes	–	Yes
	A4	210 × 297 mm (8.3 × 11.7 in.)	–	Yes	–	Yes

Paper weight, thickness and capacity

Paper Type		Weight	Thickness	No. of sheets
Cut Sheet	Plain Paper	64 to 120 g/m^2	0.08 to 0.15 mm	100 [1]
	Inkjet Paper	64 to 200 g/m^2	0.08 to 0.25 mm	20
	Glossy Paper	Up to 220 g/m^2	Up to 0.25 mm	20 [2]
Cards	Photo Card	Up to 220 g/m^2	Up to 0.25 mm	20 [2]
	Index Card	Up to 120 g/m^2	Up to 0.15 mm	30
	Post Card	Up to 200 g/m^2	Up to 0.23 mm	30
Envelopes		75 to 95 g/m^2	Up to 0.52 mm	10
Transparencies		–	–	10

[1] Up to 50 sheets for Legal size paper 80 g/m^2.
Up to 100 sheets of A4 80 g/m^2 paper.

[2] For Photo 10×15cm and Photo L paper, use the photo paper tray. (See *Loading photo paper* on page 17.)

Loading paper and other media

Note

To print on Photo L or 10 x 15 cm paper, see *Loading photo paper* on page 17.

1. If the paper support flap is open, close it, and then pull the paper tray completely out of the machine.
   Lift the output paper tray cover (1).

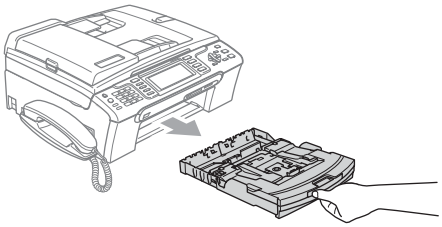

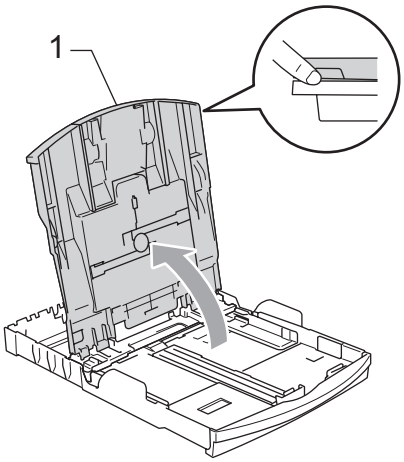

2. Press and slide the paper side guides (1) and paper length guide (2) to fit the paper size.

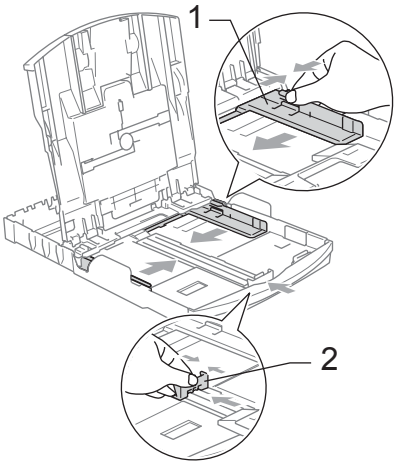

3. Fan the stack of paper well to avoid paper jams and misfeeds.

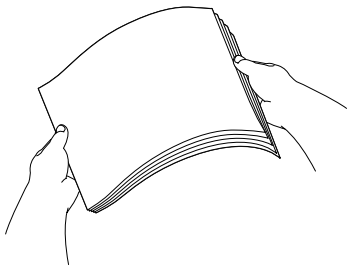

Note

Always make sure that the paper is not curled.

4 Gently put the paper into the paper tray print side down and top edge first. Check that the paper is flat in the tray.

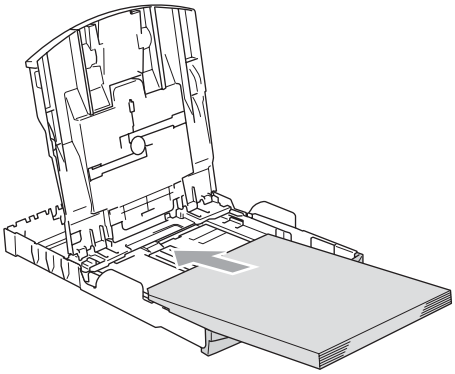

Note

When you use Legal size paper, press and hold the universal guide release button as you slide out the front of the paper tray.

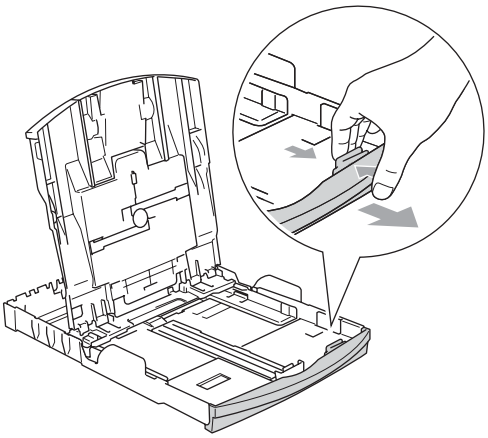

5 Gently adjust the paper side guides to the paper with both hands.
Make sure the paper side guides touch the sides of the paper.

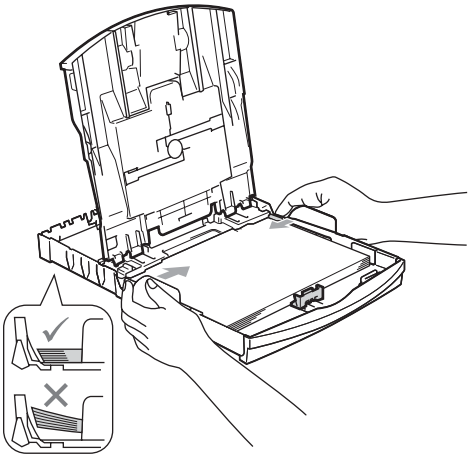

Note

Be careful that you do not push the paper in too far; it may lift at the back of the tray and cause feed problems.

6 Close the output paper tray cover.

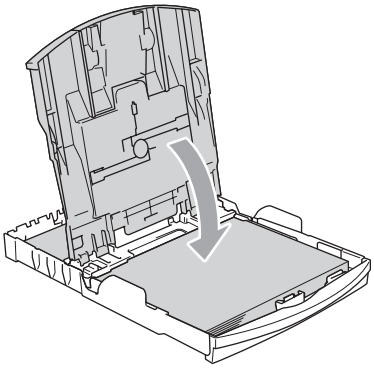

7 Slowly push the paper tray completely into the machine.

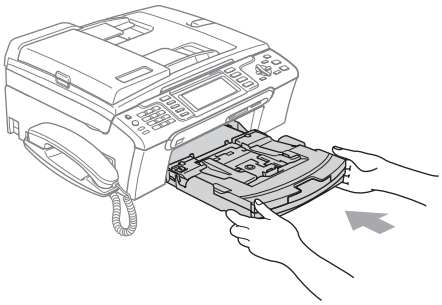

8 While holding the paper tray in place, pull out the paper support (1) until it clicks and unfold the paper support flap (2).

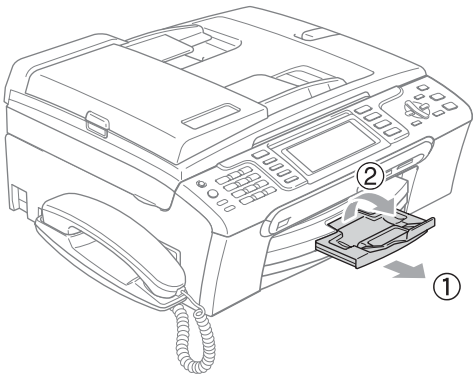

Note

Do not use the paper support flap for Legal paper.

Loading envelopes and post cards

About envelopes

- Use envelopes that weigh from 75 to 95 g/m^2 (20 to 25 lb).
- Some envelopes need margin settings to be set in the application. Make sure you do a test print first.

CAUTION

DO NOT use any of the following types of envelopes, as they will cause paper feed problems:

- That are of a baggy construction.
- That are embossed (have raised writing on them).
- That have clasps or staples.
- That are pre-printed on the inside.

Glue	Double flap

Occasionally you may experience paper feed problems caused by the thickness, size and flap shape of the envelopes you are using.

How to load envelopes and post cards

1. Before loading, press the corners and sides of the envelopes or post cards to make them as flat as possible.

Note

If the envelopes or post cards are ‘double-feeding’, put one envelope or post card in the paper tray at a time.

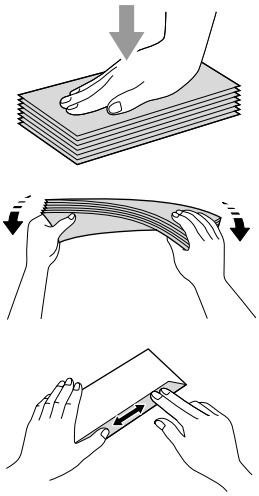

2. Put the envelopes or post cards into the paper tray with the address side down and the leading edge (top of the envelopes) in first . Slide the paper side guides (1) and paper length guide (2) to fit the size of the envelopes or post cards.

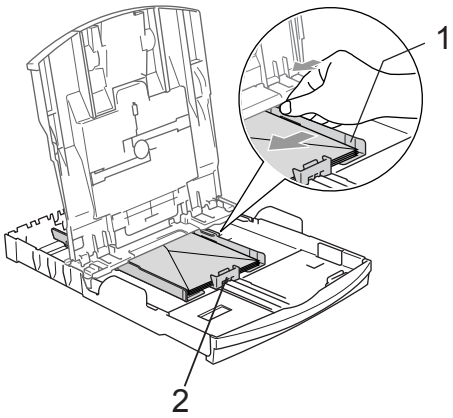

If you have problems when printing on envelopes, try the following suggestions:

1. Open the envelope flap.
2. Make sure the open flap is either to the side of the envelope or to the back edge of the envelope when printing.
3. Adjust the size and margin in your application.

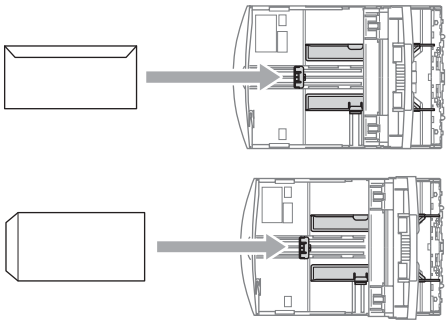

Loading photo paper

Use the photo paper tray, which has been assembled on the top of the output paper tray cover, to print on photo 10×15cm and photo L size paper. When you use the photo paper tray, you do not have to take out the paper that is in the tray beneath it.

1. Press the photo paper tray release button with your left thumb and push the photo paper tray backward until it clicks into the photo printing position.

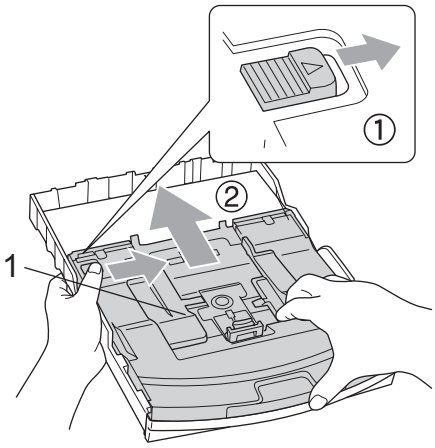

1 Photo Paper Tray

2 Press and slide the paper side guides (1) and paper length guide (2) to fit the paper size.

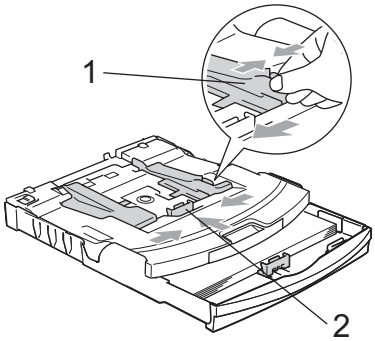

Note

When you print on Brother photo paper, load the instruction sheet included with the photo paper in the paper tray first, and then put the photo paper on top of the instruction sheet.

3 Put the photo paper into the photo paper tray and gently adjust the paper side guides to the paper.
Make sure the paper side guides touch the sides of the paper.

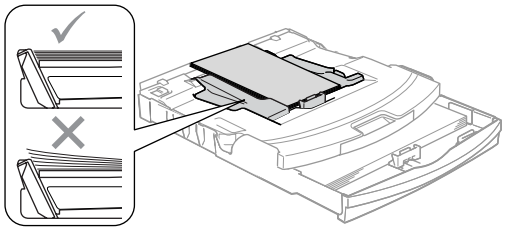

Note

- Be careful that you do not push the paper in too far; it may lift at the back of the tray and cause feed problems.
- Always make sure that the paper is not curled.

4 When you have finished printing photos return the photo paper tray to the normal printing position.
Press the photo paper tray release button with your left thumb and pull the photo paper tray forward until it clicks.

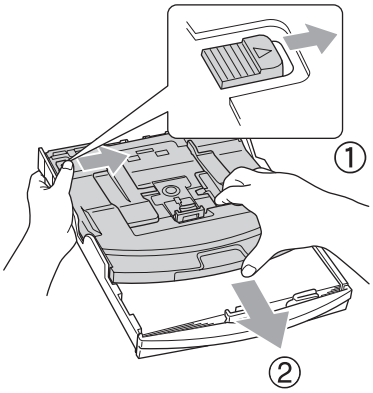

Removing small printouts from the machine

When the machine ejects small paper onto the output paper tray you may not be able to reach it. Make sure printing has finished, and then pull the tray completely out of the machine.

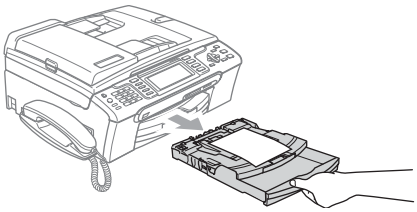

Printable area

The printable area depends on the settings in the application you are using. The figures below show the unprintable areas on cut sheet paper and envelopes. The machine can only print in the shaded areas when the Borderless print feature is available and turned on.

Cut Sheet Paper

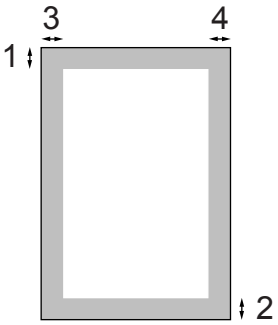

Envelopes

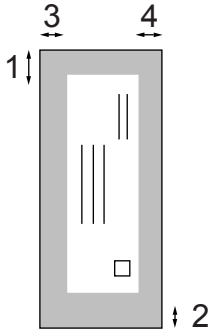

	Top (1)	Bottom (2)	Left (3)	Right (4)
Cut Sheet	3 mm	3 mm	3 mm	3 mm
Envelopes	12 mm	24 mm	3 mm	3 mm

Note

The Borderless feature is not available for envelopes.

3 General setup

Power Save mode

When the machine is idle, you can put the machine into Power Save mode by pressing the **Power Save** key. You can still receive telephone calls in Power Save mode. For further information on receiving faxes in the power save condition, please see the table on page 21. The delayed faxes that have been set up will be sent. You can even retrieve faxes using Remote Retrieval if you are away from your machine. If you want to do other operations, you must take the machine out of Power Save mode.

Note

If you have connected an external telephone or TAD, it is always available.

Putting your machine in Power Save mode

1. Press and hold down the **Power Save** key until the LCD shows `Shutting Down`.
   The LCD will stay on for a few seconds before going off.

Bringing your machine out of Power Save mode

1. Press the **Power Save** key.
   The LCD shows the date and time.

Note

- Even if you have put the machine into Power Save mode, it will periodically clean the print head to preserve print quality.
- If you unplug the AC power cord, no machine operations will be available.
- You can customize Power Save mode so that, apart from automatic head cleaning, no machine operations are available. (See *Power Save setting* below.)

Power Save setting

You can customize the machine's **Power Save** key. The factory setting is `Fax Receive:On`. Your machine can receive faxes or calls even when the machine is in Power Save mode. If you do not want your machine to receive faxes or calls, turn this setting to `Fax Receive:Off`.

1. Press **Menu**.
2. Press ▲ or ▼ to choose `General Setup`.
   Press **OK**.
3. Press ▲ or ▼ to choose `P.Save Setting`.
4. Press ◀ or ▶ to choose `Fax Receive:Off`
   (or `Fax Receive:On`).
   Press **OK**.
5. Press **Stop/Exit**.

On/Off setting	Receive mode	Available operations
Fax Receive :On [1] [2] (factory setting)	Fax Only Fax/Tel Manual [3]	Fax Receive Fax Detect Delayed Fax [4] Fax Forward [4] Fax Storage [4] Fax Preview [4] PC Fax Receive [4] Remote Retrieval [4]
	TAD	Fax Receive Recording Incoming Message Fax Detect Delayed Fax [4] Fax Forward [4] Fax Storage [4] Fax Preview [4] PC Fax Receive [4] Remote Retrieval [4]
Fax Receive :Off	—	No machine operations will be available other than cleaning the print head.

1 You cannot receive a fax with **Mono Start** or **Colour Start**.

2 You can receive telephone calls by lifting the handset.

3 When an external TAD is connected and Fax Detect is turned on.

4 Set before you switch off the machine.

Mode Timer

The machine has four temporary mode keys on the control panel: **Fax**, **Scan**, **Copy** and **PhotoCapture**. You can change the amount of time the machine takes after the last Scan, Copy or PhotoCapture operation before it returns to Fax mode. If you choose Off, the machine stays in the mode you used last.

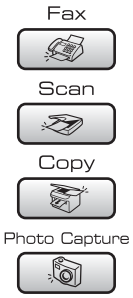

1. Press **Menu**.
2. Press ▲ or ▼ to choose General Setup.
   Press **OK**.
3. Press ▲ or ▼ to choose Mode Timer.
4. Press ◀ or ▶ to choose 0Sec, 30Secs, 1Min, 2Mins, 5Mins or Off.
   Press **OK**.
5. Press **Stop/Exit**.

Paper settings

Paper Type

To get the best print quality, set the machine for the type of paper you are using.

1. Press **Menu**.
2. Press ▲ or ▼ to choose `General Setup`.
   Press **OK**.
3. Press ▲ or ▼ to choose `Paper Type`.
4. Press ◀ or ▶ to choose `Plain Paper`, `Inkjet Paper`, `Brother Photo`, `Other Photo` or `Transparency`.
   Press **OK**.
5. Press **Stop/Exit**.

Note

The machine ejects paper with printed surfaces face up onto the paper tray in front of the machine. When you use transparencies or glossy paper, remove each sheet at once to prevent smudging or paper jams.

Paper Size

You can use five sizes of paper for printing copies: Letter, Legal, A4, A5, and 10 × 15 cm (4 × 6 in.) and three sizes for printing faxes: Letter, Legal and A4. When you change the size of paper you load in the machine, you will need to change the paper size setting at the same time so your machine can fit an incoming fax on the page.

1. Press **Menu**.
2. Press ▲ or ▼ to choose `General Setup`.
   Press **OK**.
3. Press ▲ or ▼ to choose `Paper Size`.
4. Press ◀ or ▶ to choose `Letter`, `Legal`, `A4`, `A5` or `10x15cm`.
   Press **OK**.
5. Press **Stop/Exit**.

Volume Settings

Ring Volume

You can choose a range of ring volume levels, from High to Off.

When the madline is idle, press ◀ or ▶ to adjust the volume level. The LCD shows the current setting, and each key press will change the volume to the next level. The machine will keep the new setting until you change it.You can also change the volume through the menu, by following the instructions below:

Setting the Ring Volume from the menu

1. Press **Menu**.
2. Press ▲ or ▼ to choose General Setup.
   Press **OK**.
3. Press ▲ or ▼ to choose Volume.
   Press **OK**.
4. Press ▲ or ▼ to choose Ring.
5. Press ◀ or ▶ to choose Low, Med, High or Off.
   Press **OK**.
6. Press **Stop/Exit**.

Beeper Volume

When the beeper is on, the machine will beep when you press a key, make a mistake or after you send or receive a fax.

You can choose a range of volume levels, from High to Off.

1. Press **Menu**.
2. Press ▲ or ▼ to choose General Setup.
   Press **OK**.
3. Press ▲ or ▼ to choose Volume.
   Press **OK**.
4. Press ▲ or ▼ to choose Beeper.
5. Press ◀ or ▶ to choose Low, Med, High or Off.
   Press **OK**.
6. Press **Stop/Exit**.

Speaker Volume

You can choose a range of speaker volume levels, from High to Off.

1. Press **Menu**.
2. Press ▲ or ▼ to choose General Setup.
   Press **OK**.
3. Press ▲ or ▼ to choose Volume.
   Press **OK**.
4. Press ▲ or ▼ to choose Speaker.
5. Press ◀ or ▶ to choose Low, Med, High or Off.
   Press **OK**.
6. Press **Stop/Exit**.

Note

- You can adjust the speaker volume while you are listening to your outgoing message (OGM) and incoming messages (ICM's) by pressing ◀ or ▶.
- If you turn Incoming Recording Monitor to OFF the Speaker for screening calls will be disabled and you won't hear callers leaving messages. The volume for other operations can still be controlled using ◀ or ▶.

LCD display

LCD Contrast

You can adjust the LCD contrast for a sharper and more vivid display. If you are having difficulty reading the LCD, try changing the contrast setting.

1. Press **Menu**.
2. Press ▲ or ▼ to choose `General Setup`.
   Press **OK**.
3. Press ▲ or ▼ to choose `LCD Settings`.
   Press **OK**.
4. Press ▲ or ▼ to choose `LCD Contrast`.
5. Press ◀ or ▶ to choose `Light`, `Med` or `Dark`.
   Press **OK**.
6. Press **Stop/Exit**.

Setting the backlight brightness

If you are having difficulty reading the LCD, try changing the brightness setting.

1. Press **Menu**.
2. Press ▲ or ▼ to choose `General Setup`.
   Press **OK**.
3. Press ▲ or ▼ to choose `LCD Settings`.
   Press **OK**.
4. Press ▲ or ▼ to choose `Backlight`.
5. Press ◀ or ▶ to choose `Light` or `Dark`.
   Press **OK**.
6. Press **Stop/Exit**.

Setting the Dim Timer for the backlight

You can set how long the LCD backlight stays on after the last key press.

1. Press **Menu**.
2. Press ▲ or ▼ to choose `General Setup`.
   Press **OK**.
3. Press ▲ or ▼ to choose `LCD Settings`.
   Press **OK**.
4. Press ▲ or ▼ to choose `Dim Timer`.
5. Press ◀ or ▶ to choose `10Secs`, `20Secs`, `30Secs` or `Off`.
   Press **OK**.
6. Press **Stop/Exit**.

Setting the Off Timer

You can set how long the LCD stays on after the last key press. This is a power saving feature. The machine can print and scan from your computer and receive faxes and voice calls when the LCD is off.

1. Press **Menu**.
2. Press ▲ or ▼ to choose `General Setup`.
   Press **OK**.
3. Press ▲ or ▼ to choose `LCD Settings`.
   Press **OK**.
4. Press ▲ or ▼ to choose `Off Timer`.
5. Press ◀ or ▶ to choose `1Min`, `2Mins`, `3Mins`, `5Mins`, `10Mins`, `30Mins` or `Off`.
   Press **OK**.
6. Press **Stop/Exit**.

Note

When the display is off you can press any key to turn it back on.

Setting the Wallpaper

You can change the wallpaper.

1. Press **Menu**.
2. Press ▲ or ▼ to choose `General Setup`.
   Press **OK**.
3. Press ▲ or ▼ to choose `LCD Settings`.
   Press **OK**.
4. Press ▲ or ▼ to choose `Wallpaper`.
   Press **OK**.
5. Press ▲ or ▼ to choose a wallpaper.
   Press **OK**.
6. Press **Stop/Exit**.

LCD Language

You can change the LCD Language.

1. Press **Menu**.
2. Press ▲ or ▼ to choose `Initial Setup`.
   Press **OK**.
3. Press ▲ or ▼ to choose `Local Language`.
   Press **OK**.
4. Press ▲ or ▼ to choose `English` or `Chinese`.
   Press **OK**.
5. Press **Stop/Exit**.

Setting the Fax Logic

You can change the transmission process when you send or receive the fax manually with an external telephone.

Easy mode:

	Call Out	Receives Call
Documents in the ADF	Send the faxes by pressing **Start**.	—
No documents in the ADF of Documents on the scanner glass	Send the faxes by pressing **Start**.	Receive the faxes by pressing **Start**.

Advanced mode:

	Call Out	Receives Call
Documents in the ADF	Send the faxes by pressing **Start**.	—

No documents in the ADF of Documents on the scanner glass	Press **Start**, and then you can select:
	`Send/Receive?`
	`Send→Press 1`
	`Receive→Press 2`
		Press **Start**, and then you can select:
		`Send/Receive?`
		`Send→Press 1`
		`Receive→Press 2`

1. Press **Menu**.
2. Press ▲ or ▼ to choose `Fax`.
   Press **OK**.
3. Press ▲ or ▼ to choose `Miscellaneous`.
   Press **OK**.
4. Press ▲ or ▼ to choose `Fax Mode`.
   Press **OK**.
5. Press ◀ or ▶ to choose `Easy Mode` or `Advanced Mode`.
   Press **OK**.
6. Press **Stop/Exit**.

4 Security features

Memory Security

Memory Security lets you prevent unauthorized access to the machine. You will not be able to continue to schedule Delayed Faxes or Polling jobs. However, any pre-scheduled Delayed Faxes will be sent even if you turn on Memory Security, so they will not be lost.

While Memory Security is On, the following operations are available:

- Receiving faxes into memory (limited by memory capacity)
- Fax Forwarding (If Fax Forwarding was already On)
- Remote retrieval (If Fax Storage was already On)

While Memory Security is on, the following operations are NOT available:

- Printing received faxes
- Sending faxes
- Copying
- PC printing
- Scanning
- PhotoCapture
- PC Fax Receive
- Operation from control panel

Note

- To print the faxes in memory, turn off Memory Security.
- You must turn off PC Fax Receive before you can turn on Memory Security. (See *Turning off Advanced Fax Operations* on page 68.)
- If you forget the Memory Security password, please call your Brother dealer for service.

Setting and changing the memory security password

Note

If you have already set the password, you will not need to set it again.

Setting a password for the first time

1. Press **Menu**.
2. Press ▲ or ▼ to choose `Fax`.
   Press **OK**.
3. Press ▲ or ▼ to choose `Miscellaneous`.
   Press **OK**.
4. Press ▲ or ▼ to choose `Mem Security`.
   Press **OK**.
5. Enter a 4-digit number for the password.
   Press **OK**.
6. When the LCD shows `Verify:`, re-enter the password.
   Press **OK**.
7. Press **Stop/Exit**.

Changing your memory security password

1. Press **Menu**.
2. Press ▲ or ▼ to choose `Fax`.
   Press **OK**.
3. Press ▲ or ▼ to choose `Miscellaneous`.
   Press **OK**.
4. Press ▲ or ▼ to choose `Mem Security`.
   Press **OK**.
5. Press ▲ or ▼ to choose `Set Password`.
   Press **OK**.
6. Enter the registered 4-digit number for the current password.
   Press **OK**.
7. Enter a 4-digit number for a new password.
   Press **OK**.
8. When the LCD shows `Verify:`, re-enter the new password.
   Press **OK**.
9. Press **Stop/Exit**.

Turning the memory security on/off

Turning on the memory security lock

1. Press **Menu**.
2. Press ▲ or ▼ to choose `Fax`.
   Press **OK**.
3. Press ▲ or ▼ to choose `Miscellaneous`.
   Press **OK**.
4. Press ▲ or ▼ to choose `Mem Security`.
   Press **OK**.
5. Press ▲ or ▼ to choose `Set Security`.
   Press **OK**.
6. Enter the registered 4-digit password.
   Press **OK**.
   The machine goes offline and the LCD shows `Secure Mode`.

Note

If there is a power failure the data will stay in memory for approximately 24 hours.

Turning off the memory security

1. Press **Menu**.
2. Enter the registered 4-digit password.
   Press **OK**.
   Memory Security is automatically turned off.

Note

If you enter the wrong password, the LCD shows `Wrong Password` and stays offline. The machine will stay in Secure mode until the registered password is entered.

Section II

Fax

Sending a fax	30
Receiving a Fax	38
Telephone and External devices	44
Dialling and storing numbers	52
Digital TAD	59
Advanced fax operations (Monochrome only)	63
Printing Reports	72
Polling	74

5 Sending a fax

Entering Fax mode

When you want to send a fax, or change fax send or receive settings, press the (**Fax**) key to illuminate it in green.

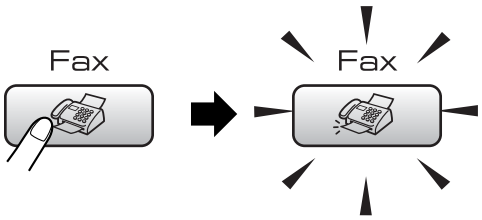

The LCD shows:

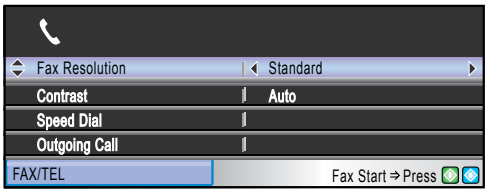

Press ▲ or ▼ to scroll through the **Fax** key options. Some functions are only available when sending monochrome faxes.

- `Fax Resolution` (See page 34.)
- `Contrast` (See page 33.)
- `Speed Dial` (See page 52.)
- `Outgoing Call` (See page 53.)
- `Caller ID hist.` (See page 53.)
- `Broadcasting` (See page 32.)
- `Delayed Fax` (See page 35.)
- `Batch TX` (See page 35.)
- `Real Time TX` (See page 34.)
- `Polled TX` (See page 76.)
- `Polling RX` (See page 74.)
- `Overseas Mode` (See page 35.)
- `Scan Size` (See page 31.)
- `Set New Default` (See page 36.)
- `Factory Reset` (See page 36.)

When the option you want is highlighted, press **OK**.

Faxing from the ADF

1. Press (**Fax**).
2. Put the document face down in the ADF. (See *Using the ADF* on page 9.)
3. Enter the fax number using the dial pad or Speed Dial.

Note

You can preview a fax message before sending it by pressing **Fax Preview**. (See *How to preview an outgoing fax* on page 66.)

4. Press **Mono Start** or **Colour Start**. The machine starts scanning the document.

Note

- To cancel, press **Stop/Exit**.
- If you send a black & white fax when the memory is full, it will be sent in real time.

Faxing from the scanner glass

You can use the scanner glass to fax pages of a book one at a time (Sending a multiple page document is available when it is sent automatically). The documents can be up to letter or A4 size.

You cannot send multiple pages for colour faxes.

Note

Since you can only scan one page at a time, it is easier to use the ADF if you are sending a multiple page document.

1. Press (**Fax**).
2. Load your document face down on the scanner glass. (See *Using the scanner glass* on page 10)
3. Enter the fax number using the dial pad or Speed Dial.

Note

You can preview a fax message before sending it by pressing **Fax Preview**. For details, see *How to preview an outgoing fax* on page 66.

4. Press **Mono Start** or **Colour Start**.
   - If you press **Mono Start**, the machine starts scanning the first page. Go to step ❺.
   - If you press **Colour Start**, the machine starts sending the document.
5. Do one of the following:
   - To send a single page, press **2** to choose `No` (or press **Mono Start** again).

     The machine starts sending the document.
   - To send more than one page, press **1** to choose `Yes` and go to step ❻.
6. Put the next page on the scanner glass. Press **OK**.
   The machine starts scanning the page. (Repeat steps ❺ and ❻ for each additional page.)

Faxing Letter size documents from the scanner glass

When documents are Letter size, you need to set Scan Size to Letter. If you do not, the side portion of the faxes will be missing.

1. Press (**Fax**).
2. Press ▲ or ▼ to choose `Scan Size`.
3. Press ◀ or ▶ to choose `Letter`.

Note

You can save the setting you use most often by setting it as default. (See page 36.)

Colour fax transmission

Your machine can send a colour fax to machines that support this feature.

Colour faxes cannot be stored in the memory. When you send a colour fax, the machine will send it in real time (even if `Real Time TX` is set to `Off`).

Cancelling a fax in progress

If you want to cancel a fax while the machine is scanning, dialling or sending, press **Stop/Exit**.

Broadcasting (Monochrome only)

Broadcasting is when the same fax message is automatically sent to more than one fax number. You can include Groups, Speed Dial numbers and up to 50 manually dialled numbers in the same broadcast.

After the broadcast is finished, a Broadcast Report will be printed.

1. Press (**Fax**).
2. Load your document.
3. Press ▲ or ▼ to choose `Broadcasting`.
   Press **OK**.
4. Do one of the following:
   - Press ▲ or ▼ to choose `Add Number` and enter a number using a dial pad.
     Press **OK**.
   - Press ▲ or ▼ to choose `Speed Dial` and **OK**. Press ▲ or ▼ to choose `Alphabetical Order` or `Numerical Order` and **OK**.
     Press ▲ or ▼ to select a number and **OK**.
5. After you have entered all the fax numbers by repeating step ❹, press ▲ or ▼ to choose `Complete`.
   Press **OK**.
6. Press **Mono Start**.

Note

- If you did not use up any of the numbers for Groups, you can ‘broadcast’ faxes to as many as 210 different numbers.
- The available memory will vary depending on the types of jobs in the memory and the number of locations used for broadcasting. If you broadcast to the maximum numbers available, you will not be able to use dual access and delayed fax.
- If the memory is full, press **Stop/Exit** to stop the job. If more than one page has been scanned, press **Mono Start** to send the portion that is in the memory.

Cancelling a Broadcast in progress

1. Press **Menu**.
2. Press ▲ or ▼ to choose `Fax`.
   Press **OK**.
3. Press ▲ or ▼ to choose `Remaining Jobs`.
   Press **OK**.
   The LCD will show the fax number being dialled and the Broadcast job number.
4. Press **OK**.
   The LCD will ask you the following message:
   `Cancel Job?`
   `Yes` → `Press 1`
   `No` → `Press 2`
5. Press **1** to clear the number being dialled.
   The LCD will then show the Broadcast job number.
6. Press **OK**.
   The LCD will ask you the following message:
   `Cancel Job?`
   `Yes` → `Press 1`
   `No` → `Press 2`
7. Press **1** to cancel the Broadcast.
8. Press **Stop/Exit**.

Additional sending operations

Sending faxes using multiple settings

When you send a fax you can choose any combination of these settings: resolution, contrast, overseas mode, delayed fax timer, polling transmission and real time transmission.

1. Press (**Fax**).
   The LCD shows:

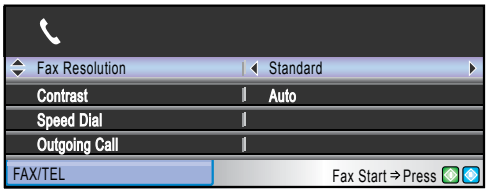

2. Press ▲ or ▼ to choose a setting you want to change.
3. Press ◀ or ▶ to choose an option.
4. Go back to ❷ to change more settings.

Note

- Most settings are temporary and the machine returns to its default settings after you send a fax.
- You can save some of the settings you use most often by setting them as default. These settings will stay until you change them again. (See *Setting your changes as a new default* on page 36.)

Contrast

If your document is very light or very dark, you may want to change the contrast. For most documents the factory setting `Auto` can be used. It automatically chooses the suitable contrast for your document.

Use Light when sending a light document.

Use Dark when sending a dark document.

1. Press (**Fax**).
2. Press ▲ or ▼ to choose `Contrast`.
3. Press ◀ or ▶ to choose `Auto`, `Light` or `Dark`.

Note

Even if you choose `Light` or `Dark`, the machine will send the fax using the `Auto` setting in any of the following conditions:

- When you send a colour fax.
- When you choose `Photo` as the Fax Resolution.

Changing fax resolution

The quality of a fax can be improved by changing the fax resolution.

1. Press (**Fax**).
2. Press ▲ or ▼ to choose `Fax Resolution`.
3. Press ◀ or ▶ to choose the resolution you want.

Note

You can choose four different resolution settings for monochrome faxes and two for colour.

Monochrome	
`Standard`	Suitable for most typed documents.
`Fine`	Good for small print and transmits a little slower than Standard resolution.
`S.Fine`	Good for small print or artwork and transmits slower than Fine resolution.
`Photo`	Use when the document has varying shades of grey or is a photograph. This has the slowest transmission.

Colour	
`Standard`	Suitable for most typed documents.
`Fine`	Use when the document is a photograph. The transmission time is slower than Standard resolution.

If you choose `S.Fine` or `Photo` and then use the **Colour Start** key to send a fax, the machine will send the fax using the `Fine` setting.

Dual access (Monochrome only)

You can dial a number and start scanning the fax into memory—even when the machine is sending from memory, receiving faxes or printing PC data. The LCD shows the new job number and available memory.

The number of pages you can scan into the memory will vary depending on the data that is printed on them.

Note

If the `Out of Memory` message appears while scanning documents, press **Stop/Exit** to cancel or **Mono Start** to send the scanned pages.

Real time transmission

When you are sending a fax, the machine will scan the documents into the memory before sending. Then, as soon as the telephone line is free, the machine will start dialling and sending.

If the memory is full or you are sending a colour fax, the machine will send the document in real time (even if `Real Time TX` is set to `Off`).

Sometimes, you may want to send an important document immediately, without waiting for memory transmission. You can turn on `Real Time TX`.

1. Press (**Fax**).
2. Press ▲ or ▼ to choose `Real Time TX`.
3. Press ◀ or ▶ to choose `On`.
   Press **OK**.

Note

In real time transmission, the automatic redial feature does not work when using the scanner glass.

Overseas Mode

If you are having difficulty sending a fax overseas due to possible interference on the telephone line, we recommend that you turn on the Overseas mode. After you send a fax using this feature, the feature will turn itself off.

1. Press (**Fax**).
2. Load your document.
3. Press ▲ or ▼ to choose `Overseas Mode`.
4. Press ◀ or ▶ to choose `On` (or `Off`).
   Press **OK**.

Delayed Faxing (Monochrome only)

During the day you can store up to 50 faxes in the memory to be sent within 24-hours. These faxes will be sent at the time of day you enter in step ❺.

1. Press (**Fax**).
2. Load your document.
3. Press ▲ or ▼ to choose `Delayed Fax`.
4. Press ◀ or ▶ to choose `On`.
   Press **OK**.
5. Enter the time you want the fax to be sent (in 24-hour format).
   (For example, enter 19:45 for 7:45 PM.)
   Press **OK**.

Note

The number of pages you can scan into the memory depends on the amount of data that is printed on each page.

Delayed Batch Transmission (Monochrome only)

Before sending the delayed faxes, your machine will help you economize by sorting all the faxes in the memory by destination and scheduled time. All delayed faxes that are scheduled to be sent at the same time to the same fax number will be sent as one fax to save transmission time.

1. Press (**Fax**).
2. Press ▲ or ▼ to choose `Batch TX`.
3. Press ◀ or ▶ to choose `On`.
   Press **OK**.
4. Press **Stop/Exit**.

Checking and cancelling waiting jobs

You can check which jobs are still waiting in the memory to be sent and cancel a job. (If there are no jobs, the LCD shows `No Jobs Waiting`.)

1. Press **Menu**.
2. Press ▲ or ▼ to choose `Fax`.
   Press **OK**.
3. Press ▲ or ▼ to choose `Remaining Jobs`.
   Press **OK**.
   Any waiting jobs appear on the LCD.
4. Press ▲ or ▼ to scroll through the jobs and choose the job you want to cancel.
   Press **OK**.
5. Do one of the following:
   - To cancel, press **1** to choose `Yes`.
     If you want to cancel another job go to step ❹.
   - To exit without cancelling, press **2** to choose `No`.

6 When you have finished, press **Stop/Exit**.

Setting your changes as a new default

You can save the fax settings for `Fax Resolution`, `Contrast`, `Real Time TX` and `Scan Size` you use most often by setting them as default. These settings will stay until you change them again.

1 Press (**Fax**).

2 Press ▲ or ▼ to choose your new setting. Press **OK**.
Repeat this step for each setting you want to change.

3 After changing the last setting, press ▲ or ▼ to choose `Set New Default`. Press **OK**.

4 Press **1** to choose `Yes`.

5 Press **Stop/Exit**.

Restoring all settings to the factory settings

You can restore all the settings you have changed to the factory settings. These settings will stay until you change them again.

1 Press (**Fax**).

2 Press ▲ or ▼ to choose `Factory Reset`. Press **OK**.

3 Press **1** to choose `Yes`.

4 Press **Stop/Exit**.

Sending a fax manually

Manual transmission lets you hear the dialling, ringing and fax-receiving tones while sending a fax.

1 Press (**Fax**).

2 Load your document.

3 To listen for a dial tone press **Speaker Phone** or pick up the handset.

4 Dial the fax number.

5 When you hear the fax tone, press **Mono Start** or **Colour Start**.
Press **1** when you select the `Fax Mode` to `Advanced Mode` and send the fax from the scanner glass. (See *Setting the Fax Logic* on page 26.)

6 If you picked up the handset replace it.

Sending a fax at the end of a conversation

At the end of a conversation you can send a fax to the other party before you both hang up.

1 Ask the other party to wait for fax tones (beeps) and then to press the Start or Send key before hanging up.

2 Load your document.

3 Press **Mono Start** or **Colour Start**.

- If you select the `Fax Mode` to `Advanced Mode`, press **1** to send a fax.

4 Replace the handset.

Out of Memory message

If you get an `Out of Memory` message while scanning the first page of a fax, press **Stop/Exit** to cancel the fax.

If you get an `Out of Memory` message while scanning a subsequent page, you will have the option to press **Mono Start** to send the pages scanned so far, or to press **Stop/Exit** to cancel the operation.

Note

If you get an `Out of Memory` message while faxing and you do not want to delete your stored faxes to clear the memory, you can send the fax in real time. (See *Real time transmission* on page 34.)

6 Receiving a Fax

Receive modes

You must choose a receive mode depending on the external devices and telephone services you have on your line.

Choosing the Receive Mode

By default, your machine will automatically receive any faxes that are sent to it. The diagram below will help you choose the correct mode.

For more detailed information on the receive modes, see *Using receive modes* on page 39.

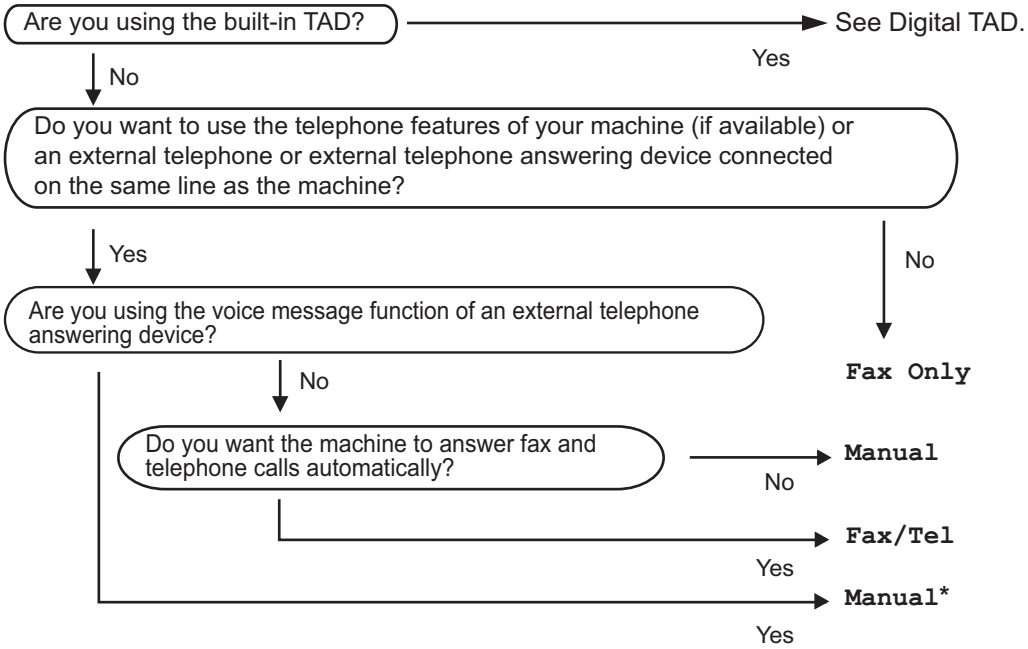

To set a receive mode follow the instructions below.

1. Press **Menu**.
2. Press ▲ or ▼ to choose `Initial Setup`.
   Press **OK**.
3. Press ▲ or ▼ to choose `Receive Mode`.
4. Press ◀ or ▶ to choose `Fax Only`, `Fax/Tel`, or `Manual`.
   Press **OK**.
5. Press **Stop/Exit**.

The LCD will display the current receive mode.

Using receive modes

Some receive modes answer automatically (`Fax Only` and `Fax/Tel`). You may want to change the ring delay before using these modes. See *Ring Delay* on page 40.

Fax only

Fax only mode will automatically answer every call as a fax call.

Fax/Tel

Fax/Tel mode helps you automatically manage incoming calls, by recognizing whether they are fax or voice calls and dealing with them in one of the following ways:

- Faxes will be automatically received.
- Voice calls will start the F/T ring to tell you to pick up the line. The F/T ring is a fast double ring made by your machine.

Also see *F/T Ring Time (Fax/Tel mode only)* on page 40 and *Ring Delay* on page 40.

Manual

To receive a fax in manual mode press **Speaker Phone** or lift the handset of the machine. When you hear fax tones (short repeating beeps) press **Mono Start** or **Colour Start**. Press **2** when you select the `Fax Mode` to `Advanced Mode` (See *Setting the Fax Logic* on page 26.). You can also use the Fax Detect feature to receive faxes by lifting a handset on the same line as the machine.

Also see *Fax Detect* on page 41.

TAD (Message Center)

TAD helps you automatically manage incoming calls, by recognising whether they are fax or voice calls and dealing with them in one of the following ways:

- Faxes will be automatically received.
- Voice callers can record a message.

To set up the TAD mode, see page 59.

	If TAD Mode is On, it will override your receive mode setting. The screen shows `TAD`.
	If TAD Mode is Off, the receive mode returns to your original setting. (See *TAD-Mode for internal TAD* on page 59.)

Receive mode settings

Ring Delay

The Ring Delay sets the number of times the machine rings before it answers in `Fax Only` or `Fax/Tel` mode.

(See *Operation from extension telephones* on page 50 and *Fax Detect* on page 41.)

If toll saver is `On`, then the ring delay setting has no effect. See *Setting toll saver* on page 62.

1. Press **Menu**.
2. Press ▲ or ▼ to choose `Fax`.
   Press **OK**.
3. Press ▲ or ▼ to choose `Setup Receive`.
   Press **OK**.
4. Press ▲ or ▼ to choose `Ring Delay`.
   Press **OK**.
5. Press ◀ or ▶ to choose how many times the line rings before the machine answers.
   Press **OK**.
   If you choose `0`, the line will not ring at all.
6. Press **Stop/Exit**.

F/T Ring Time (Fax/Tel mode only)

If you set the Receive Mode to `Fax/Tel`, you need to decide how long the machine will signal you with its special pseudo/double-ring when you have a voice call. If it's a fax call, the machine receives the fax.

This pseudo/double-ring happens after the initial ringing from the telephone company. Only the machine rings and no other telephones on the same line will ring with the special pseudo/double-ring. However, you can still answer the call on any telephone.

1. Press **Menu**.
2. Press ▲ or ▼ to choose `Fax`.
   Press **OK**.
3. Press ▲ or ▼ to choose `Setup Receive`.
   Press **OK**.
4. Press ▲ or ▼ to choose `F/T Ring Time`.
5. Press ◀ or ▶ to choose how long the machine will ring to alert you that you have a voice call.
   Press **OK**.
6. Press **Stop/Exit**.

Note

Even if the caller hangs up during the pseudo/double-ringing, the machine will continue to ring for the set time.

Fax Detect

If Fax Detect is On:

The machine receives a fax call automatically, even if you answer the call. When you see Receiving on the LCD or when you hear “chirps” through the handset you are using, just replace the handset. Your machine will do the rest.

If Fax Detect is Semi:

The machine will only receive a fax call automatically if you answered it using the machine’s handset, cordless handset or Speaker Phone. If you answered at an extension telephone, press ∗ **5 1**. (See *Operation from extension telephones* on page 50.)

If Fax Detect is Off:

If you are at the machine and answer a fax call by lifting the handset, press **Mono Start** or **Colour Start**. Press **2** when you select the Fax Mode to Advanced Mode. (See *Setting the Fax Logic* on page 26.)

If you answered at an extension telephone, press ∗ **5 1**. (See *Operation from extension telephones* on page 50.)

Note

- If this feature is set to On, but your machine does not connect a fax call when you lift an extension or external telephone handset, press the remote activation code ∗ **5 1**.
- If you send faxes from a computer on the same telephone line and the machine intercepts them, set Fax Detect to Off.

1. Press **Menu**.
2. Press ▲ or ▼ to choose Fax.
   Press **OK**.
3. Press ▲ or ▼ to choose Setup Receive.
   Press **OK**.
4. Press ▲ or ▼ to choose Fax Detect.
5. Press ◀ or ▶ to choose On, Semi (or Off).
   Press **OK**.
6. Press **Stop/Exit**.

Additional receiving operations

Printing a reduced incoming fax

If you choose On, the machine automatically reduces each page of an incoming fax to fit on one page of A4, Letter, Legal size paper. The machine calculates the reduction ratio by using the page size of the fax and your Paper Size setting. (See *Paper Size* on page 22.)

1. Press **Menu**.
2. Press ▲ or ▼ to choose Fax.
   Press **OK**.
3. Press ▲ or ▼ to choose Setup Receive.
   Press **OK**.
4. Press ▲ or ▼ to choose Auto Reduction.
5. Press ◀ or ▶ to choose On (or Off).
   Press **OK**.
6. Press **Stop/Exit**.

Receiving faxes into memory (Monochrome only)

As soon as the paper tray becomes empty during fax reception, the LCD shows No Paper Fed; put some paper in the paper tray. (See *Loading paper and other media* on page 14.) If you are unable to put paper in the paper tray the following will happen:

If Memory Receive is On:

The machine will carry on receving the fax, with the remaining pages being stored in memory, if enough memory is available. Further incoming faxes will also be stored into memory until the memory is full. When the memory is full the machine will stop automatically answering calls. To print the faxes, put paper in the tray.

If Memory Receive is Off:

The machine will carry on receiving the fax, with the remaining pages being stored in memory if enough memory is available. The machine will then stop automatically answering calls until paper is put in the paper tray. To print the last fax you received, put paper in the tray.

1. Press **Menu**.
2. Press ▲ or ▼ to choose Fax.
   Press **OK**.
3. Press ▲ or ▼ to choose Setup Receive.
   Press **OK**.
4. Press ▲ or ▼ to choose Memory Receive.
5. Press ◀ or ▶ to choose On (or Off).
   Press **OK**.
6. Press **Stop/Exit**.

Receiving a fax at the end of a conversation

At the end of a conversation you can ask the other party to send you a fax before you both hang up. If you select the `Fax Mode` to `Easy Mode`, you cannot receive a fax at the end of a conversation.

1. Ask the other party to place the document in their machine and to press the Start or Send key.
2. When you hear the other machine's CNG tones (slowly repeating beeps), press **Mono Start** or **Colour Start**.
3. Press **2** to receive a fax.
4. Replace the handset.

Printing a fax from the memory

If you have chosen fax storage, you can still print a fax from the memory when you are at your machine. (If you have chosen Fax Preview see *Fax Preview* on page 64.)

1. Press **Menu**.
2. Press ▲ or ▼ to choose `Fax`.
   Press **OK**.
3. Press ▲ or ▼ to choose `Advanced Fax Operation`.
   Press **OK**.
4. Press ▲ or ▼ to choose `Print Document`.
   Press **OK**.
5. Press **Mono Start**.

Note

When you print a fax from the memory, the fax data will be erased.

7 Telephone and External devices

Voice operations

Voice calls can be made either with the handset, the speaker phone, an extension or external telephone, by dialling manually, or by using Quick Dial numbers.

Making a telephone call

1. To start a voice call, do one of the following:
   - Pick up the handset.
   - Press **Speaker Phone**.
2. When you hear the dial tone, enter a number using the dial pad, Speed Dial or Search.
3. If you pressed **Speaker Phone**, speak clearly toward the microphone.
4. To hang up, do one of the following:
   - Replace the handset.
   - Press **Speaker Phone**.

Answering calls with the Speaker Phone

When the machine rings, instead of lifting the handset, press **Speaker Phone** on the machine. Speak clearly toward the microphone. To end the call, press **Speaker Phone**.

Note

If you have a bad connection, your caller might hear your voice echoed during the call. If you experience this problem, pick up the handset, or hang up and try the call again.

Hold

1. Press **Hold** to put a call on Hold.
   You can replace the handset without disconnecting the call.
2. Pick up the machine's handset or press **Speaker Phone** to release the call from Hold.

Note

You can pick up an extension telephone and continue speaking without releasing the call from Hold on the machine.

Tone or Pulse

If you have a Pulse dialling service, but need to send Tone signals (for example, for telephone banking), follow the instructions below:

1. Press **Speaker Phone** on the machine.
2. Press **#** on the machine's control panel. Any digits dialled after this will send tone signals.

When you hang up, the machine will return to the Pulse dialling service.

Fax/Tel mode

When the machine is in Fax/Tel mode, it will use the F/T Ring Time (pseudo/double-ringing) to alert you to pick up a voice call.

If you are at the machine, you can lift the handset or press **Speaker Phone** to answer.

If you are at an extension telephone, you'll need to lift the handset during the F/T Ring Time and then press **# 5 1** between the pseudo/double rings. If no one is on the line, or if someone wants to send you a fax, send the call back to the machine by pressing **∗ 5 1**.

Fax/Tel mode in Power Save condition

When the machine is in Power Save mode you can receive faxes if the Power Save setting is `Fax Receive:On`. (See *Power Save setting* on page 20.)

When the machine is in Fax/Tel mode and F/T rings to tell you to pick up a voice call, you can only answer by picking up the machine's handset.

If you answer before the machine F/T rings, you can also pick up the call at an external or extension telephone.

Phone line services

Your machine supports the Caller ID subscriber telephone service that some telephone companies offer.

Features like Voice Mail, Call Waiting, Call Waiting/Caller ID, RingMaster, answering services, alarm systems or other custom features on one phone line may create problems with the operation of your machine.

Do you have Voice Mail?

If you have Voice Mail on the phone line that you will install your new machine on, *there is a strong possibility that Voice Mail and the* machine *will conflict with each other while receiving incoming calls.* **However, the Distinctive Ring feature allows you to use more than one number on your line, so both Voice Mail and the machine can work together without any problems.** If each one has a separate phone number, neither will interfere with the other's operations.

If you decide to get the Distinctive Ring service from the telephone company, you will need to follow the directions on next page to 'register' the new Distinctive Ring pattern they give you. This is so your machine can recognise its incoming calls.

Telephone Service

The caller ID feature of this machine lets you use the caller ID subscriber service offered by certain telephone companies.

Caller ID (Caller IDentification) (not available in certain area)

The Caller ID is a telephone service that allows the subscriber to see a display of the caller's phone number as the telephone rings. It is a fast way to screen your calls. You can respond quickly to calls you missed, because caller IDs are received and stored in your fax machine memory. Besides the standard Caller ID feature, you can also select a single caller's phone number and call back.

Note

- To get the Caller ID service, you have to apply for it at your local telephone company.
- FSK and DTMF are the two modes for displaying your calls.
  The default mode of this machine is FSK.
  Please ask your local telephone company for whether your mode is FSK or DTMF.
  If your local telephone company uses DTMF mode, please switch your mode as follows. Contact your local telephone company or Brother dealer in the case that the feature does not work normally.
  Caller ID feature is not available in the following situation:

1. You have not applied for it at your local telephone company.
2. The fax machine is connected to an internal switchboard or other switch device.
3. Due to the switchboard problems or line problems of local telephone companies, the feature may not work in some areas.

Advantages of Caller ID

For Business

All businesses profit from a quicker response to customer calls.

For Home

Residential customers can protect themselves from unwanted calls.

Setup Method

1. Press **Menu**.
2. Press ▲ or ▼ to choose `Fax`.
   Press **OK**.
3. Press ▲ or ▼ to choose `Miscellaneous`.
   Press **OK**.
4. Press ▲ or ▼ to choose `Caller ID Type`.
   Press **OK**.
5. Press ◀ or ▶ to choose `FSK` or `DTMF`.
   Press **OK**.
6. Press **Stop/Exit**.

Caller ID feature

The Caller ID feature of this machine lets you use the Caller ID subscriber service offered by many local phone companies. This service provides you, by means of the screen display, the telephone number (or name) of your caller as the line rings. (See *Printing Caller ID List* on page 48.)

After a few rings, the screen displays the telephone number of your caller (or name, if available). Once you answer the call, the Caller ID information disappears from the screen, but the call information remains stored in the Caller ID memory.

- You will see the first 16 characters of the number or name.
- `ID Unknown` display means call originates outside your Caller ID service area.
- `ID Withheld` display means the caller has intentionally blocked transmission of information.

Note

You can print a list of Caller ID information received by your machine.

Caller ID service varies with different carriers. Call your local phone company to determine the kind of service available in your area.

Viewing Caller ID List

1. Press **Menu**.
2. Press ▲ or ▼ to choose `Fax`.
   Press **OK**.
3. Press ▲ or ▼ to choose `Miscellaneous`.
   Press **OK**.
4. Press ▲ or ▼ to choose `Caller ID`.
   Press **OK**.
5. Press ▲ or ▼ to choose `Display#`.
   Press **OK**.
   The Caller ID list will appear on the display. If no ID is stored, the beeper will sound and `No Caller ID` will appear on the display.
6. Press ▲ or ▼ to scroll through the Caller ID memory.
   The LCD shows the caller's name or number, the date, and time of the call.
7. To finish viewing, press **Stop/Exit**.

Note

You can also view the Caller ID list by pressing (**Fax**). (See *Caller ID history* on page 53.)

7

Printing Caller ID List

1. Press **Menu**.
2. Press ▲ or ▼ to choose `Fax`.
   Press **OK**.
3. Press ▲ or ▼ to choose `Miscellaneous`.
   Press **OK**.
4. Press ▲ or ▼ to choose `Caller ID`.
   Press **OK**.
5. Press ▲ or ▼ to choose `Print Report`.
   Press **OK**.
   If no ID is stored, the beeper will sound and `No Caller ID` will appear on the LCD.
6. Press **Mono Start** or **Colour Start**.
7. When the printing has finished, press **Stop/Exit**.

Connecting an external TAD (telephone answering device)

You may choose to connect an external answering device. However, when you have an **external** TAD on the same telephone line as the machine, the TAD answers all calls and the machine 'listens' for fax calling (CNG) tones. If it hears them, the machine takes over the call and receives the fax. If it does not hear CNG tones, the machine lets the TAD continue playing your outgoing message so your caller can leave you a voice message.

The TAD must answer within two rings. The machine cannot hear CNG tones until the TAD has answered the call, and with four rings there are only 8 to 10 seconds of CNG tones left for the fax 'handshake'. Make sure you carefully follow the instructions in this guide for recording your outgoing message. We do not recommend using the toll saver feature on your external answering machine if it exceeds five rings.

Note

If you do not receive all your faxes, cut the Ring Delay setting on your external TAD.

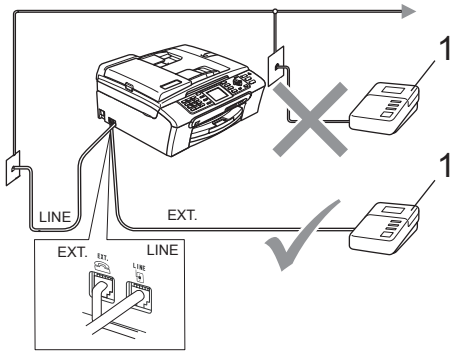

1 TAD

When the TAD answers a call, the LCD shows `Ext. Tel in Use`.

Improper Setup

Do not connect a TAD elsewhere on the same phone line.

Connections

The external TAD must be connected as shown in the previous illustration.

1. Set your external TAD to one or two rings. (The machine's Ring Delay setting does not apply.)
2. Record the outgoing message on your external TAD.
3. Set the TAD to answer calls.
4. Set the Receive Mode to `Manual`. (See *Choosing the Receive Mode* on page 38.)

Recording outgoing message (OGM) on an external TAD

Timing is important in recording this message. The message sets up the ways to handle both manual and automatic fax reception.

1. Record 5 seconds of silence at the beginning of your message. (This allows your machine time to listen for the fax CNG tones of automatic transmissions before they stop.)
2. Limit your speaking to 20 seconds.

Note

We recommend beginning your OGM with an initial 5-second silence because the machine cannot hear fax tones over a resonant or loud voice. You may try omitting this pause, but if your machine has trouble receiving, then you must re-record the OGM to include it.

Multi-line connections (PBX)

We suggest you ask the company who installed your PBX to connect your machine. If you have a multi line system we suggest you ask the installer to connect the unit to the last line on the system. This prevents the machine being activated each time the system receives telephone calls. If all incoming calls will be answered by a switchboard operator we recommend that you set the Receive Mode to `Manual`.

We cannot guarantee that your machine will operate properly under all circumstances when connected to a PBX. Any difficulties with sending or receiving faxes should be reported first to the company who handles your PBX.

If you are installing the machine to work with a PBX

1. It is not guaranteed that the unit will work properly under all circumstances with a PBX. Report any cases of problems first to the company that handles your PBX.
2. If all incoming calls will be answered by a switchboard operator, we recommend setting the Receive Mode to `Manual`. All incoming calls should at first be regarded as telephone calls.

External and extension phones

Connecting an external or extension telephone

You can connect a separate telephone to your machine as shown in the diagram below.

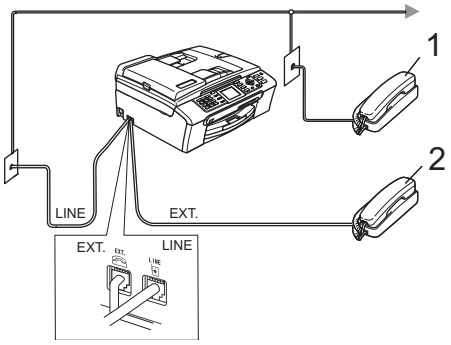

1 Extension telephone

2 External telephone

When you are using an external or extension phone, the LCD shows `Ext. Tel in Use`.

Operation from extension telephones

If you answer a fax call on an extension or an external telephone plugged into the correct socket on the machine, you can make your machine take the call by using the Fax Receive Code. When you press the Fax Receive Code ∗ **5 1**, the machine starts to receive the fax.

If the machine answers a voice call and pseudo/double-rings for you to take over, use the Telephone Answer Code **# 5 1** to take the call at an extension phone. (See *F/T Ring Time (Fax/Tel mode only)* on page 40.)

If you answer a call and no one is on the line:

You should assume that you're receiving a manual fax.

Press ∗ **5 1** and wait for the chirp or until the LCD shows `Receiving`, and then hang up.

Note

You can also use the Fax Detect feature to make your machine automatically take the call. (See *Fax Detect* on page 41)

Using a cordless external telephone

If your cordless telephone is connected to the telephone line cord (See *External and extension phones* on page 50.) and you typically carry the cordless handset elsewhere, it is easier to answer calls during the Ring Delay.

If you let the machine answer first, you will have to go to the machine so you can press **Speaker Phone** to send the call to the cordless handset.

Using remote codes

Fax receive code

If you answer a fax call on an extension or external telephone, you can tell your machine to receive it by dialling the fax receive code ∗ **5 1**. Wait for the chirping sounds then replace the handset. See *Fax Detect* on page 41. Your caller will have to press **Start** to send the fax.

Telephone answer code

If you receive a voice call and the machine is in F/T mode, it will start to sound the F/T (double) ring after the initial ring delay. If you pick up the call on an extension phone you can turn the F/T ring off by pressing **# 5 1** (make sure you press this *between* the rings).

Changing the remote codes

If you want to use Remote Activation, you have to turn on the remote codes. The preset Fax Receive Code is ∗ **5 1**. The preset Telephone Answer Code is **# 5 1**. If you want to, you can replace them with your own codes.

1. Press **Menu**.
2. Press ▲ or ▼ to choose `Fax`.
   Press **OK**.
3. Press ▲ or ▼ to choose `Setup Receive`.
   Press **OK**.
4. Press ▲ or ▼ to choose `Remote Codes`.
5. Press ◀ or ▶ to choose `On` (or `Off`).
   Press **OK**.
6. Enter the new Fax Receive Code.
   Press **OK**.
7. Press ▲ or ▼ to choose `Deact.Code:`.
   Enter the new Telephone Answer Code.
   Press **OK**.
8. Press **Stop/Exit**.

Note

- If you are always disconnected when accessing your external TAD remotely, try changing the Fax Receive Code and Telephone Answer Code to another three-digit code using the numbers **0**-**9**, ∗, **#**.
- Remote Codes might not work with some telephone systems.

8 Dialling and storing numbers

How to Dial

Manual dialling

Press all of the digits of the fax or telephone number.

Speed Dialling

1. Press **Speed Dial**.

You can also choose `Speed Dial` by pressing (**Fax**).

2. Press ▲ or ▼ to choose `Search`.
Press **OK**.

3. Press the two-digit Speed Dial number. (See *Storing Speed Dial numbers* on page 54.)

4. If you have two numbers in the location, press ▲ or ▼ to choose the number you want to call.
Press **OK**.

Note

If the LCD shows `Not Registered` when you enter a Speed Dial number, a number has not been stored at this location.

Search

You can search for names you have stored in the Speed Dial memory.

1. Press **Speed Dial**.
You can also choose `Speed Dial` by pressing (**Fax**).

2. Press ▲ or ▼ to choose `Search`.
Press **OK**.

3. Press ▲ or ▼ to choose `Alphabetical Order` or `Numerical Order`.
Press **OK**.

Note

- Press * to make the LCD font size larger.
- Press **#** to make the LCD font size smaller.

4. If you chose `Alphabetical Order` in step ❸, use the dial pad to enter the first letter of the name, and then press ▲ or ▼ to choose the name and number you want to call.
Press **OK**.

Fax Redial

If you are sending a fax manually and the line is busy, press **Redial/Pause**, and then press **Mono Start** or **Colour Start** to try again. If you want to make a second call to a number you recently dialled, you can press **Redial/Pause** and choose one of the last 30 numbers from the Outgoing Call List.

Redial/Pause only works if you dialled from the control panel. *If you are sending a fax automatically* and the line is busy, the machine will automatically redial up to three times at five minute intervals.

1. Press **Redial/Pause**.
2. Press ▲ or ▼ to choose the number you want to redial.
   Press **OK**.
3. Press ▲ or ▼ to choose `Send a fax`.
   Press **OK**.
4. Press **Mono Start** or **Colour Start**.

Note

In Real Time Transmission the automatic redial feature does not work when using the scanner glass.

Outgoing Call

The last 30 numbers you telephoned or sent a fax to will be stored in the outgoing call history. You can choose one of these numbers to telephone, fax to, add to Speed Dial, or delete from the history.

1. Press **Redial/Pause**.
   You can also choose `Outgoing Call` by pressing (**Fax**).
2. Press ▲ or ▼ to choose the number you want to call.
   Press **OK**.
3. Do one of the following:
   - To make a telephone call, press ▲ or ▼ to choose `Make a phone call`.
     Press **OK**.
   - To send a fax, press ▲ or ▼ to choose `Send a fax`.
     Press **OK**.
     Press **Mono Start** or **Colour Start**.
   - If you want to store the number, press ▲ or ▼ to choose `Add to Speed Dial`.
     Press **OK**.
     (See *Storing Speed Dial numbers from Outgoing Calls* on page 55.)
   - Press ▲ or ▼ to choose `Delete`.
     Press **OK**.
     Press **1** to confirm.
4. Press **Stop/Exit**.

Caller ID history

This feature requires the Caller ID subscriber service offered by many local telephone companies.

The last 30 numbers of telephone calls or faxes you received will be stored in the Caller ID history. You can choose one of these numbers to telephone, fax to, add to Speed Dial, or delete from the history.

1. Press (**Fax**).
2. Press ▲ or ▼ to choose `Caller ID hist.`.
   Press **OK**.
3. Press ▲ or ▼ to choose the number you want to call.
   Press **OK**.

4 Do one of the following:

- To make a telephone call, press ▲ or ▼ to choose `Make a phone call`.

  Press **OK**.

- To send a fax, press ▲ or ▼ to choose `Send a fax`.

  Press **OK**.

  Press **Mono Start** or **Colour Start**.

- If you want to store the number, press ▲ or ▼ to choose `Add to Speed Dial`.

  Press **OK**.

  (See *Storing Speed Dial numbers from Outgoing Calls* on page 55.)

- Press ▲ or ▼ to choose `Delete`.

  Press **OK**.

  Press **1** to confirm.

5 Press **Stop/Exit**.

Note

You can print the Caller ID list. (See *Printing Caller ID List* on page 48.)

Storing numbers

You can set up your machine to do the following types of easy dialling: Speed Dial and Groups for broadcasting faxes. When you dial a Quick Dial number, the LCD shows the name, if you stored it, or the number.

Note

If you lose electrical power, the Quick Dial numbers that are in the memory will not be lost.

Storing a pause

Press **Redial/Pause** to put a 3.5-second pause between numbers. If you are dialling overseas, you can press **Redial/Pause** as many times as needed to increase the length of the pause.

Storing Speed Dial numbers

You can store up to 80 2-digit Speed Dial locations with a name, and each name can have two numbers. When you dial you will only have to press a few keys (For example: **Speed Dial**, `Search`, **OK**, the two-digit number, and **Mono Start** or **Colour Start**).

1 Press **Speed Dial**.

2 Press ▲ or ▼ to choose `Set Speed Dial`.
Press **OK**.

3 Press ▲ or ▼ to choose the Speed Dial location you want to store the number in.
Press **OK**.

4 Do one of the following:

- Enter the name (up to 16 characters) using the dial pad.

  Press **OK**.

  (To help you enter letters, see *Entering Text* on page 160.)

- To store the number without a name, press **OK**.

5 Enter the fax or telephone number (up to 20 digits).
Press **OK**.

6 Do one of the following:

- Enter the second fax or telephone number (up to 20 digits).

  Press **OK**.

- If you do not want to store a second number, press **OK**.

7 Press ▲ or ▼ to choose `Complete`.
Press **OK**.
To store another Speed Dial number, go to step ❸.

8 Press **Stop/Exit**.

Storing Speed Dial numbers from Outgoing Calls

You can also store Speed Dial numbers from the Outgoing Call history.

1 Press **Redial/Pause**.
You can also choose `Outgoing Call` by pressing (**Fax**).

2 Press ▲ or ▼ to choose the name or number you want to store.
Press **OK**.

3 Press ▲ or ▼ to choose `Add to Speed Dial`.
Press **OK**.

4 Press ▲ or ▼ to choose the Speed Dial location you want to store the number in.
Press **OK**.

5 Do one of the following:

- Enter the name (up to 16 characters) using the dial pad.

  Press **OK**.

  (To help you enter letters, see *Entering Text* on page 160.)

- To store the number without a name, press **OK**.

6 Press **OK** to confirm the fax or telephone number.

7 Do one of the following:

- Enter the second fax or telephone number (up to 20 digits).

  Press **OK**.

- If you do not want to store a second number, press **OK**.

8 Press ▲ or ▼ to choose `Complete`.
Press **OK**.

9 Press **Stop/Exit**.

Storing Speed Dial numbers from the Caller ID history

If you have the Caller ID subscriber service from your telephone company you can also store Speed Dial numbers from incoming calls in the Caller ID History. (See *Caller ID feature* on page 47.)

1 Press (**Fax**).

2 Press ▲ or ▼ to choose `Caller ID hist..`
Press **OK**.

3 Press ▲ or ▼ to choose the number you want to store.
Press **OK**.

4 Press ▲ or ▼ to choose `Add to Speed Dial`.
Press **OK**.

5 Press ▲ or ▼ to choose the 2-digit Speed Dial location you want to store the number in.
Press **OK**.

6 Do one of the following:

- Enter the name (up to 16 characters) using the dial pad.

  Press **OK** or use **Clear/Back** to delete the name, and then press **OK**

  (To help you enter letters, see *Entering Text* on page 160.)

- To store the number without a name, press **OK** or use **Clear/Back** to delete the name, and then press **OK**.

7 Press **OK** to confirm the fax or telephone number.

8 Do one of the following:

- Enter the second fax or telephone number (up to 20 digits).

  Press **OK**.

- If you do not want to store a second number, press **OK**.

9 Press ▲ or ▼ to choose `Complete`.
Press **OK**.

10 Press **Stop/Exit**.

Changing Speed Dial names or numbers

You can change a Speed Dial name or number that has already been stored.

1 Press **Speed Dial**.

2 Press ▲ or ▼ to choose `Set Speed Dial`.
Press **OK**.

3 Press ▲ or ▼ to choose the 2-digit Speed Dial location you want to change.
Press **OK**.

4 Do one of the following:

- Press ▲ or ▼ to choose `Change`.

  Press **OK**.

- Press ▲ or ▼ to choose `Delete`.

  Press **OK**.

  Press **1** to confirm.
  Go to step ❽.

5 Press ▲ or ▼ to choose `Name`, `Fax/Tel1:` or `Fax/Tel2:`.
Press **OK**.

6 Do one of the following:

- If you chose `Name`, enter the new name (up to 16 characters) using the dial pad.

  Press **OK**.

  (See *Entering Text* on page 160.)

- If you chose `Fax/Tel1:` or `Fax/Tel2:`, enter the new number.

  Press **OK**.

Note

How to change the stored name or number:

If you want to change a character, press ◀ or ▶ to position the cursor under the character you want to change, and then press **Clear/Back**. Re-enter the character.

7 Do one of the following:

- To change more details, go to step ❺.

- Press ▲ or ▼ to choose `Complete`.

  Press **OK**.

8 Press **Stop/Exit**.

Setting up groups for broadcasting

Groups, which can be stored in a Speed Dial location, allow you to send the same fax message to many fax numbers by pressing only **Speed Dial**, `Search`, **OK**, the two-digit location, and **Mono Start**. First, you'll need to store each fax number in a Speed Dial location. Then you can include them as numbers in the Group. Each Group uses up a Speed Dial location. You can have up to six Groups, or you can assign up to 158 numbers in a large Group if you have 2 numbers in each location.

(See *Storing Speed Dial numbers* on page 54 and *Broadcasting (Monochrome only)* on page 32.)

1. Press **Speed Dial**.
2. Press ▲ or ▼ to choose `Setup Groups`.
   Press **OK**.
3. Press ▲ or ▼ to choose `GROUP1`, `GROUP2`, `GROUP3`, `GROUP4`, `GROUP5` or `GROUP6` for the Group name where you will store the fax numbers.
   Press **OK**.
4. Press ▲ or ▼ to choose the 2-digit location where you want to add to the Group.
   Press **OK**.
5. Press ▲ or ▼ to choose `Add Number`.
   Press **OK**.
6. Press ▲ or ▼ to choose the number you want to add.
   Press **OK**.
   (See *Search* on page 52.)
7. After you have finished adding numbers by repeating steps ❺ and ❻, press ▲ or ▼ to choose `Complete`.
   Press **OK**.
8. Press **Stop/Exit**.

Note

You can print a list of all the Speed Dial numbers. Group numbers will be marked in the GROUP column. (See *Reports* on page 73.)

Changing Group name

1. Press **Speed Dial**.
2. Press ▲ or ▼ to choose `Setup Groups`.
   Press **OK**.
3. Press ▲ or ▼ to choose the Group name you want to change.
   Press **OK**.
4. Press ▲ or ▼ to choose `Change Group Name`.
   Press **OK**.

Note

How to change the stored name or number:

If you want to change a character, press ◀ or ▶ to position the cursor under the character you want to change, and then press **Clear/Back**. Re-enter the character.

5. Enter the new name (up to 16 characters) using the dial pad.
   Press **OK**.
   (See *Entering Text* on page 160. For example, type NEW CLIENTS.)
6. Press ▲ or ▼ to choose `Complete`.
   Press **OK**.
7. Press **Stop/Exit**.

Deleting a Group

1. Press **Speed Dial**.
2. Press ▲ or ▼ to choose `Setup Groups`.
   Press **OK**.
3. Press ▲ or ▼ to choose the Group you want to delete.
   Press **OK**.
4. Press ▲ or ▼ to choose `Delete`.
   Press **OK**.
   Press **1** to confirm.
5. Press **Stop/Exit**.

Deleting a number from a Group

1. Press **Speed Dial**.
2. Press ▲ or ▼ to choose `Setup Groups`.
   Press **OK**.
3. Press ▲ or ▼ to choose the Group you want to change.
   Press **OK**.
4. Press ▲ or ▼ to choose the number you want to delete.
   Press **OK**.
   Press **1** to confirm.
5. Press ▲ or ▼ to choose `Complete`.
   Press **OK**.
6. Press **Stop/Exit**.

Combining Quick Dial numbers

Sometimes you may want to choose from several long distance carriers when you make a call. Rates may vary depending on the time and destination. To take advantage of low rates, you can store the access codes of long-distance carriers and credit card numbers as Speed Dial numbers. You can store these long dialling sequences by dividing them and setting them up as separate Speed Dial numbers in any combination. You can even include manual dialling using the dial pad. (See *Storing Speed Dial numbers* on page 54.)

For example, you might have stored ‘555’ on Speed Dial: 03 and ‘7000’ on Speed Dial: 02. You can use them both to dial ‘555-7000’ if you press the following keys:

1. Press **Speed Dial**.
2. Press ▲ or ▼ to choose `Search`.
   Press **OK**.
3. Enter **03**.

Note

If you stored 2 numbers in one Speed Dial location, you will be asked which number you want to send to.

4. Press ▲ or ▼ to choose `Speed Dial`.
   Press **OK**.
5. Press ▲ or ▼ to choose `Search`.
   Press **OK**.
6. Enter **02**.
7. Press **Mono Start** or **Colour Start**.
   You will dial ‘555-7000’.

To temporarily change a number, you can substitute part of the number with manual dialling using the dial pad. For example, to change the number to 555-7001 you could press **Speed Dial**, choose `Search`, press **03** and then press **7001** using the dial pad.

Note

If you must wait for another dial tone or signal at any point in the dialling sequence, create a pause in the number by pressing **Redial/Pause**. Each key press adds a 3.5-second delay.

9 Digital TAD

TAD-Mode for internal TAD

The TAD feature will store up to 99 incoming messages. Messages are stored in the order in which they are received.

Voice messages can be up to 3 minutes in length, and can also be picked up remotely (see *Using your Remote Access Code* on page 69). The number of messages you can store will depend on how much memory is being used by other features (for example, delayed and stored faxes).

In the event of a power failure your machine will retain messages that are in the memory for approximately 24 hours.

Setting up the TAD

Recording the TAD outgoing message (`TAD Message`) is the first step you need to follow before you can use the TAD feature.

To enter TAD mode, follow the steps below:

1. Record your TAD OGM (`TAD Message`).
2. Press ⌂ to activate the TAD.

Outgoing message (OGM)

Recording your OGM

You can record the following two different types of OGM:

- `TAD Message`

  This message will be played when a call is received. The caller will be able to leave a voice or fax message.

- `F/T Message`

  This message is played when a call is received and your machine is set to Fax/Tel mode. The caller will not be able to leave a message. See *Fax/Tel OGM (Announcement)* on page 60.

  Your OGM must be less than 20 seconds long.

1. Press **Menu**.
2. Press ▲ or ▼ to choose `Fax`.
   Press **OK**.
3. Press ▲ or ▼ to choose `Setup TAD`.
   Press **OK**.
4. Press ▲ or ▼ to choose `OGM`.
   Press **OK**.
   The LCD prompts you to choose an OGM.
5. Press ▲ or ▼ to choose either `TAD Message` or `F/T Message`, then press **OK**.
6. Press ▲ or ▼ to choose `Record MSG`.
   Press **OK**.
7. Record your message, using one of the options below:
   - Pickup the handset, record your message, and replace the handset when finished.
8. Press **Stop/Exit**.

Listening to your OGM

1. Press **Menu**.
2. Press ▲ or ▼ to choose `Fax`.
   Press **OK**.
3. Press ▲ or ▼ to choose `Setup TAD`.
   Press **OK**.
4. Press ▲ or ▼ to choose `OGM`.
   Press **OK**.
5. Press ▲ or ▼ to choose `TAD Message` or `F/T Message`.
   Press **OK**.
6. Press ▲ or ▼ to choose `Playing OGM`.
   Press **OK**.
   Adjust the volume by pressing Volume ◀ or ▶.
7. Press **Stop/Exit**.

Erasing your OGM

1. Press **Menu**.
2. Press ▲ or ▼ to choose `Fax`.
   Press **OK**.
3. Press ▲ or ▼ to choose `Setup TAD`.
   Press **OK**.
4. Press ▲ or ▼ to choose `OGM`.
   Press **OK**.
5. Press ▲ or ▼ to choose either `TAD Message` or `F/T Message`.
   Press **OK**.
6. Press ▲ or ▼ to choose `Erase MSG`.
   Press **OK**.
7. Do one of the following:
   - Press **1** to erase the OGM.
   - Press **2** to exit without erasing.
8. Press **Stop/Exit**.

Fax/Tel OGM (Announcement)

If your machine is set to Fax/Tel receive mode this message will be played by your Brother machine to a caller. Unlike the TAD OGM, the caller *will not* be able to leave a message.

To record your Fax/Tel OGM follow the instructions on *Outgoing message (OGM)* on page 59.

If you need to review the steps for setting up the Fax/Tel receive mode, see *Receive modes* on page 38.

Activating TAD mode

When the light glows, TAD mode is active. Press to enter TAD mode.

Managing your messages

Message indicator

The ⌂ light flashes if there are any new messages waiting for you.

The LCD displays the total number of voice and fax messages stored in the TAD memory.

Fax messages are only stored when Fax Storage or Fax Preview is turned on. See *Advanced fax operations (Monochrome only)* on page 63.

Playing voice messages

All messages are played in the order they were recorded. The LCD shows the number of the current message, the total number of messages, and the time and date the message was recorded.

Follow the steps below to listen to your voice messages:

1. Press **Play/Record** .
   The following commands are available when playing messages:

* ⏮ (RWD)	Repeats a message.
# ⏭ (FWD)	Skips to the next message.
🔈 or 🔊	Adjusts the volume.

2. Press **Stop/Exit**.

Erasing incoming messages

To erase voice messages individually

1. Press **Play/Record**.
   The machine will sound a two second beep and begins message playback. Each message is preceded by one long beep, and followed by two short beeps.
2. To erase a specific message, press **Erase** immediately after the two short beeps, or while the message is playing.
3. Do one of the following:
   - Press **1** to erase the message.
   - Press **2** to cancel.

To erase all of your messages

1. Press **Erase**.
2. Do one of the following:
   - Press **1** to erase all of your voice messages.
   - Press **2** to cancel.

Additional TAD operations

Setting maximum time for incoming messages

Your machine's default setting will save incoming messages up to 30 seconds long. To change this setting follow the steps below:

1. Press **Menu**.
2. Press ▲ or ▼ to choose `Fax`.
   Press **OK**.
3. Press ▲ or ▼ to choose `Setup TAD`.
   Press **OK**.
4. Press ▲ or ▼ to choose `ICM Max.Time`.
5. Press ◀ or ▶ to choose the maximum time setting for incoming messages (`30`, `60`, `120` or `180` seconds).
   Press **OK**.
6. Press **Stop/Exit**.

Setting toll saver

When the toll saver feature is on, the machine will answer after two rings if you do have voice or fax messages, and after four rings if you do not have any messages.

This way, when you call your machine for remote retrieval, if it rings three times, you have no messages and can hang up to avoid a toll charge.

The toll saver feature is only available when TAD mode is on. When toll saver is `On`, it overrides your ring delay setting.

1. Press **Menu**.
2. Press ▲ or ▼ to choose `Fax`.
   Press **OK**.
3. Press ▲ or ▼ to choose `Setup Receive`.
   Press **OK**.
4. Press ▲ or ▼ to choose `Ring Delay`.
   Press **OK**.
5. Press ▲ or ▼ to choose `Toll Saver`.
6. Press ◀ or ▶ to choose `On` (or `Off`).
   Press **OK**.
7. Press **Stop/Exit**.

ICM Recording Monitor

This feature lets you turn the speaker volume for voice messages `On` or `Off`. When you turn the monitor `Off`, you will not hear messages as they come in.

1. Press **Menu**.
2. Press ▲ or ▼ to choose `Fax`.
   Press **OK**.
3. Press ▲ or ▼ to choose `Setup TAD`.
   Press **OK**.
4. Press ▲ or ▼ to choose `ICM Rec.Monitr`.
5. Use ◀ or ▶ to choose `Off` or `On`.
   Press **OK**.
6. Press **Stop/Exit**.

Recording a conversation

If you are using the handset, you can record a telephone conversation by pressing **Play/Record** during the conversation. Your recording can be as long as the incoming message maximum time (up to 3 minutes). The other party will hear an intermittent beeping while recording. To stop recording, press **Stop/Exit**.

10 Advanced fax operations (Monochrome only)

You can only use one advanced fax operation at a time:

- Fax Forwarding
- Fax Storage
- Fax Preview
- PC Fax Receive
- Off

You can change your selection at any time. If received faxes are still in the machine's memory when you change the advanced fax operations, a question will appear on the LCD. (See *Changing Advanced Fax Operations* on page 68.)

Fax Forwarding

When you choose Fax Forward, your machine stores the received fax in the memory. The machine will then dial the fax number you have programmed and forward the fax message.

1. Press **Menu**.
2. Press ▲ or ▼ to choose `Fax`.
   Press **OK**.
3. Press ▲ or ▼ to choose `Advanced Fax Operation`.
   Press **OK**.
4. Press ▲ or ▼ to choose `Forward/Store`.
   Press **OK**.
5. Press ▲ or ▼ to choose `Fax Forward`.
   Press **OK**.
6. Enter the forwarding number (up to 20 digits).
   Press **OK**.
7. Press ▲ or ▼ to choose `Backup Print:On` or `Backup Print:Off`.
   Press **OK**.

Note

- If you choose `Backup Print:On`, the machine will also print the fax at your machine so you will have a copy. This is the safety feature in case there is a power failure before the fax is forwarded or a problem at the receiving machine.
- The machine can store faxes approximately 24 hours if there is a power failure.
- When Fax Forwarding is turned on your machine will only receive monochrome faxes into memory. Colour faxes will not be received, unless the sending machine converts them to monochrome before sending.

8. Press **Stop/Exit**.

Fax Storage

If you choose Fax Storage, your machine stores the received fax in the memory. You will be able to retrieve fax messages from another location using the remote retrieval commands.

If you have set Fax Storage, a backup copy will automatically be printed at the machine.

1. Press **Menu**.
2. Press ▲ or ▼ to choose `Fax`.
   Press **OK**.
3. Press ▲ or ▼ to choose `Advanced Fax Operation`.
   Press **OK**.
4. Press ▲ or ▼ to choose `Forward/Store`.
   Press **OK**.
5. Press ▲ or ▼ to choose `Fax Storage`.
   Press **OK**.
6. Press **Stop/Exit**.

Note

If Fax Storage is turned on your machine cannot receive a colour fax unless the sending machine converts it to monochrome.

Fax Preview

How to preview a received fax

If you choose Fax Preview you can view received faxes on the LCD by pressing the **Fax Preview** key. When the machine is in Ready mode, a popup message will appear on the LCD to alert you of new faxes. You can continue all operations.

Setting Fax Preview

1. Press **Menu**.
2. Press ▲ or ▼ to choose `Fax`.
   Press **OK**.
3. Press ▲ or ▼ to choose `Advanced Fax Operation`.
   Press **OK**.
4. Press ▲ or ▼ to choose `Forward/Store`.
   Press **OK**.
5. Press ▲ or ▼ to choose `Fax Preview`.
   Press **OK**.
6. Press **Stop/Exit**.

Note

When Fax Preview is turned on your machine can only print the colour faxes it receives. It cannot store them in memory.

Using a fax preview

When you receive a fax, you will see the pop-up message on the LCD. (For example: `New Fax(es): 02`)

1. Press **Fax Preview**.
   You can see the new fax list.

Note

You can also see your old fax list by pressing ✱. Press **#** to go back to your new fax list.

2. Press ▲ or ▼ to choose the fax you want to see.
   Press **OK**.

Note

- If your fax is large there may be a delay before it is displayed on the LCD.
- The LCD will show the current page number and total pages of the fax message. When your fax message is over 99 pages the total number of pages will be shown as "`XX`".

3. Press **Stop/Exit**.

When a fax is open the control panel keys will perform the operations shown below.

Key	Description
✱	Enlarge the fax.
#	Reduce the fax.
▲ or ▼	Scroll vertically.
◀ or ▶	Scroll horizontally.
0	Rotate the fax clockwise.
2 ABC	Delete the fax. Press **1** to confirm.
7 PQRS	Go back to the previous page.
9 WXYZ	Go to the next page.
OK	Go to the next step. (Print and Back are available.)
Clear / Back	Go back to the fax list.
Mono Start	Print the fax. Press **1** to print the whole message or **2** to print the current page only. (After printing, you can choose to delete or keep the fax.)

How to delete all faxes in the list

1. Press **Fax Preview**.
2. Press ▲ or ▼ to choose `Delete All`.
   Press **OK**.
   Then, confirm the Delete by pressing **1**.

How to print all faxes in the list

1. Press **Fax Preview**.
2. Press ▲ or ▼ to choose `Print All`.
   Press **OK**.

How to preview an outgoing fax

You can preview a fax message before you send it. You must set the Real Time Transmission and Polling RX to off before you use this feature.

1. Press (**Fax**).
2. Load the document.
3. Enter the fax number using the dial pad or Speed Dial.
4. Press **Fax Preview**.
   The machine starts scanning the document and the outgoing fax appears on the LCD. When the fax is open the control panel keys will perform the operations shown below.

Key	Description
*	Enlarge the fax.
#	Reduce the fax.
▲ or ▼	Scroll vertically.
◀ or ▶	Scroll horizontally.
0	Rotate the fax clockwise.
7 PQRS	Go back to the previous page.
9 WXYZ	Go to the next page.

5. Press **Mono Start**.

Note

The fax message in the memory will be sent and then erased when you press **Mono Start**.

PC Fax Receive

If you turn on the PC-Fax Receive feature your machine will store received faxes in memory and send them to your PC automatically. You can then use your PC to view and store these faxes.

Even if you have turned off your PC (at night or at the weekend, for example), your machine will receive and store your faxes in its memory. The number of received faxes that are stored in the memory will appear at the bottom left side of the LCD.

When you start your PC and the PC-FAX Receiving software runs, your machine transfers your faxes to your PC automatically.

To transfer the received faxes to your PC you must have the PC-FAX Receiving software running on your PC. (For details, see *PC-FAX receiving* in the Software User's Guide on the CD-ROM.)

If you choose `Backup Print:On` the machine will also print the fax.

1. Press **Menu**.
2. Press ▲ or ▼ to choose `Fax`.
   Press **OK**.
3. Press ▲ or ▼ to choose `Advanced Fax Operation`.
   Press **OK**.
4. Press ▲ or ▼ to choose `Forward/Store`.
   Press **OK**.
5. Press ▲ or ▼ to choose `PC Fax Receive`.
   Press **OK**.
6. Press ▲ or ▼ to choose `<USB>` or the PC you want to receive.
   Press **OK**.
7. Press ▲ or ▼ to choose `Backup Print:On` or `Backup Print:Off`.
   Press **OK**.

8 Press **Stop/Exit**.

Note

- PC Fax Receive is not supported in the Mac OS®.
- Before you can set up PC Fax Receive you must install the MFL-Pro Suite software on you PC. Make sure your PC is connected and turned on. (For details see *PC-FAX Receiving* in the Software User's Guide on the CD-ROM.)
- In the event of a power failure, the machine will store your faxes in the memory for approximately 24 hours. However, if you choose `Backup Print:On` the machine will print the fax, so you will have a copy if there is a power failure before it is sent to the PC.
- If you get an error message and the machine cannot print the faxes in memory, you can use this setting to transfer your faxes to your PC. (For details, see *Error messages* on page 125.)
- When PC Fax Receive is turned on only monochrome faxes can be received into the memory and sent to the PC. Colour faxes will be received in real time and printed in colour.

Changing the destination PC

1 Press **Menu**.

2 Press ▲ or ▼ to choose `Fax`.
Press **OK**.

3 Press ▲ or ▼ to choose `Advanced Fax Operation`.
Press **OK**.

4 Press ▲ or ▼ to choose `Forward/Store`.
Press **OK**.

5 Press ▲ or ▼ to choose `PC Fax Receive`.
Press **OK**.

6 Press ▲ or ▼ to choose `Change`.
Press **OK**.

7 Press ▲ or ▼ to choose `<USB>` or the PC you want to receive.
Press **OK**.

8 Press ▲ or ▼ to choose `Backup Print:On` or `Backup Print:Off`.
Press **OK**.

9 Press **Stop/Exit**.

Turning off Advanced Fax Operations

1. Press **Menu**.
2. Press ▲ or ▼ to choose `Fax`.
   Press **OK**.
3. Press ▲ or ▼ to choose `Advanced Fax Operation`.
   Press **OK**.
4. Press ▲ or ▼ to choose `Forward/Store`.
   Press **OK**.
5. Press ▲ or ▼ to choose `Off`.
   Press **OK**.
6. Press **Stop/Exit**.

Note

The LCD will give you more options if there are received faxes still in your machine's memory. (See *Changing Advanced Fax Operations* on page 68.)

Changing Advanced Fax Operations

If received faxes are left in your machine's memory when you change the Advanced Fax Operations, the LCD will ask you one of the following questions:

■ `Erase All Doc?`

`Yes` → `Press 1`

`No` → `Press 2`

■ `Print All Fax?`

`Yes` → `Press 1`

`No` → `Press 2`

- If you press **1**, faxes in the memory will be erased or printed before the setting changes. If a backup copy has already been printed it will not be printed again.
- If you press **2**, faxes in the memory will not be erased or printed and the setting will be unchanged.

If received faxes are left in the machine's memory when you change to `PC Fax Receive` from another option [`Fax Forward`, `Fax Storage` or `Fax Preview`], press ▲ or ▼ to choose the PC.

The LCD will ask you the following message:

■ `Send Fax to PC?`

`Yes` → `Press 1`

`No` → `Press 2`

- If you press **1**, faxes in the memory will be sent to your PC before the setting changes. You will be asked if you want to turn on Backup Print. (For detail, see *PC Fax Receive* on page 66.)
- If you press **2**, faxes in the memory will not be erased or transferred to your PC and the setting will be unchanged.

Remote Retrieval

You can call your machine from any touch tone telephone or fax machine, then use the remote access code and remote commands to retrieve fax messages.

Setting a Remote Access Code

The remote access code lets you access the remote retrieval features when you are away from your machine. Before you can use the remote access and retrieval features, you have to set up your own code. The factory default code is inactive code (---*).

1. Press **Menu**.
2. Press ▲ or ▼ to choose `Fax`.
   Press **OK**.
3. Press ▲ or ▼ to choose `Advanced Fax Operation`.
   Press **OK**.
4. Press ▲ or ▼ to choose `Remote Access`.
5. Enter a three-digit code using numbers **0**-**9**, *, or **#**.
   Press **OK**. (The preset '*' cannot be changed.)

Note

Do not use the same code as your Remote Activation Code (* **5 1**) or Remote Deactivation Code (**# 5 1**).
(See *Operation from extension telephones* on page 50.)

6. Press **Stop/Exit**.

Note

You can change your code at any time by entering a new one. If you want to make your code inactive, press **Clear/Back** in step ❺ to restore the inactive setting (---*) and press **OK**.

Using your Remote Access Code

1. Dial your fax number from a touch tone telephone or another fax machine.
2. When your machine answers, enter your remote access code (3 digits followed by *) at once.
3. The machine signals if it has received messages:
   - **1 long beep — Fax messages**
   - **2 long beeps — Voice messages**
   - **3 long beeps — Fax & Voice messages**
   - **No beeps — No messages**
4. When the machine gives two short beeps, enter a command.
   The machine will hang up if you wait longer than 30 seconds to enter a command.
   The machine will beep three times if you enter an invalid command.
5. Press **9 0** to stop Remote Access when you have finished.
6. Hang up.

Note

If your machine is set to `Manual` mode and you want to use the remote retrieval features, wait about 2 minutes after it starts ringing, and then enter the remote access code within 30 seconds.

Remote Fax commands

Follow the commands below to access features when you are away from the machine. When you call the machine and enter your remote access code (3 digits followed by ∗), the system will give two short beeps and you must enter a remote command.

Remote commands			Operation details
91	**Playing Voice messages**		After one long beep, the machine plays the ICM.
	1 Repeat or Skip Backward		Press **1** while listening to an ICM to repeat it. If you press **1** before a message, you will hear the previous message.
	2 Skip Forward		While playing the ICM, you can skip to the next message.
	9 STOP Playing		Stop Playing the ICM.
93	**Erase all ICM**		If you hear one long beep, the erase is accepted. If you hear three short beeps, you cannot erase because all voice messages have not been played, or there are no voice messages to erase. *This code erases all recorded messages, not one at a time.
94	**Play and Record OGM in Memory**		
	1 Play	1 TAD Message	The machine plays the selected OGM. You can stop playing OGMs by pressing **9**.
		2 F/T Message	
	2 Record	1 TAD Message	After one long beep, you can record the selected OGM. You will hear the message played once. You can stop recording the message by pressing **9**.
		2 F/T Message	
95	**Change the Fax Forwarding or Fax Storage settings**		
	1 OFF		You can choose `Off` after you have retrieved or erased all your messages.
	2 Fax Forwarding		One long beep means the change is accepted. If you hear three short beeps, you cannot change because something has not been set up (for example, a Fax Forwarding number has not been registered). You can register your Fax Forwarding number by entering 4. (See *Changing your Fax Forwarding number* on page 71.) Once you have registered the number, Fax Forwarding will work.
	4 Fax Forwarding number		
	6 Fax Storage		
96	**Retrieve a fax**		
	2 Retrieve all faxes		Enter the number of a remote fax machine to receive stored fax messages. (See *Retrieving fax messages* on page 71.)
	3 Erase faxes from the memory		If you hear one long beep, fax messages have been erased from the memory.
97	**Check the receiving status**		
	1 Fax		You can check whether your machine has received any faxes or voice messages. If yes, you will hear one long beep. If no, you will hear three short beeps.
	2 Voice		

Remote commands		Operation details
98	**Change the Receive Mode**	
	1 TAD	If you hear one long beep, your change has been accepted.
	2 Fax/Tel	
	3 Fax Only	
90	**Exit**	Pressing **9 0** allows you to exit remote retrieval. Wait for the long beep, then replace the handset.

Retrieving fax messages

You can call your machine from any touch tone telephone and have your fax messages sent to a machine. Before you use this feature, you have to turn on Fax Storage.

1. Dial your fax number.
2. When your machine answers, enter your remote access code (3 digits followed by ∗) at once. If you hear one long beep, you have messages.
3. When you hear two short beeps, press **9 6 2**.
4. Wait for the long beep, enter the number (up to 20 digits) of the remote fax machine you want your fax messages sent to using the dial pad, then enter **# #**.

Note

You cannot use ∗ and # as dial numbers. However, press **#** if you want to create a pause.

5. Hang up after you hear your machine beep. Your machine will call the other fax machine, which will then print your fax messages.

Changing your Fax Forwarding number

You can change the default setting of your fax forwarding number from another touch tone telephone or fax machine.

1. Dial your fax number.
2. When your machine answers, enter your remote access code (3 digits followed by ∗) at once. If you hear one long beep, you have messages.
3. When you hear two short beeps, press **9 5 4**.
4. Wait for the long beep, enter the new number (up to 20 digits) of the remote fax machine you want your fax messages forwarded to using the dial pad, then enter **# #**.

Note

You cannot use ∗ and # as dial numbers. However, press **#** if you want to create a pause.

5. Press **9 0** when you have finished.
6. Hang up after you hear your machine beep.

11 Printing Reports

Fax reports

You need to set up the Transmission Verification Report and Journal Period using the **Menu** keys.

Transmission Verification Report

You can use the Transmission Verification Report as proof that you sent a fax. This report lists the time and date of transmission and whether the transmission was successful (OK). If you choose `On` or `On+Image`, the report will print for every fax you send.

If you send a lot of faxes to the same place, you may need more than the job numbers to know which faxes you must send again. Choosing `On+Image` or `Off+Image` will print a section of the fax's first page on the report to help you remember.

When the Transmission Verification Report is turned `Off` or `Off+Image`, the Report will only print if there is a transmission error, with ERROR in the RESULT column.

1. Press **Menu**.
2. Press ▲ or ▼ to choose `Fax`.
   Press **OK**.
3. Press ▲ or ▼ to choose `Report Setting`.
   Press **OK**.
4. Press ▲ or ▼ to choose `Transmission`.
5. Press ◀ or ▶ to choose `On`, `On+Image`, `Off` or `Off+Image`.
   Press **OK**.
6. Press **Stop/Exit**.

Fax Journal (activity report)

You can set the machine to print a journal at specific intervals (every 50 faxes, 6, 12 or 24 hours, 2 or 7 days). If you set the interval to `Off`, you can still print the report by following the steps on *How to print a report* on page 73. The factory setting is `Every 50 Faxes`.

1. Press **Menu**.
2. Press ▲ or ▼ to choose `Fax`.
   Press **OK**.
3. Press ▲ or ▼ to choose `Report Setting`.
   Press **OK**.
4. Press ▲ or ▼ to choose `Journal Period`.
5. Press ◀ or ▶ to choose an interval.
   Press **OK**.
   (If you choose 7 days, the LCD will ask you to choose the first day for the 7-day countdown.)
   - 6, 12, 24 hours, 2 or 7 days

     The machine will print the report at the chosen time and then erase all jobs from its memory. If the machine's memory becomes full with 200 jobs before the time you chose has passed, the machine will print the Journal early and then erase all jobs from the memory. If you want an extra report before it is due to print, you can print it without erasing the jobs from the memory.
   - Every 50 Faxes

     The machine will print the Journal when the machine has stored 50 jobs.
6. Enter the time to start printing in 24-hour format.
   Press **OK**.
   (For example: enter 19:45 for 7:45 PM.)
7. Press **Stop/Exit**.

Reports

The following reports are available:

- `XMIT Verify`

  Prints a Transmission Verification Report for your last transmission.

- `Help List`

  A help list about how to quickly program your machine.

- `Quick Dial`

  Lists names and numbers stored in the Speed Dial memory, in alphabetical or numerical order.

- `Fax Journal`

  Lists information about the last incoming and outgoing faxes. (TX: Transmit.) (RX: Receive.)

- `User Settings`

  Lists your settings.

- `Network Config`

  Lists your Network settings.

How to print a report

1. Press **Menu**.
2. Press ▲ or ▼ to choose `Print Reports`.
   Press **OK**.
3. Press ▲ or ▼ to choose the report you want.
   Press **OK**.
4. Press **Mono Start**.
5. Press **Stop/Exit**.

12 Polling

Polling overview

Polling lets you set up your machine so other people can receive faxes from you, but they pay for the call. It also lets you call somebody else's fax machine and receive a fax from it, so you pay for the call. The polling feature needs to be set up on both machines for this to work. Not all fax machines support polling.

Polling receive

Polling receive lets you call another fax machine to receive a fax.

Setup to receive polling

1. Press (**Fax**).
2. Press ▲ or ▼ to choose `Polling RX`.
3. Press ◀ or ▶ to choose `Standard`.
   Press **OK**.
4. Enter the fax number you are polling.
5. Press **Mono Start** or **Colour Start**.

Setup to receive polling with secure code

Secure Polling lets you restrict who can get the documents you set up to be polled.

Secure Polling only works with Brother fax machines. If you want to get a fax from a secured Brother machine you have to enter the secure code.

1. Press (**Fax**).
2. Press ▲ or ▼ to choose `Polling RX`.
3. Press ◀ or ▶ to choose `Secure`.
   Press **OK**.
4. Enter a four-digit secure code.
   This is the same as the security code of the fax machine you are polling.
   Press **OK**.
5. Enter the fax number you are polling.
6. Press **Mono Start** or **Colour Start**.

Setup to receive delayed polling

Delayed polling lets you set the machine to begin polling receive at a later time. You can only set up *one* delayed polling operation.

1. Press (**Fax**).
2. Press ▲ or ▼ to choose `Polling RX`.
3. Press ◀ or ▶ to choose `Timer`.
   Press **OK**.
4. Enter the time (in 24-hour format) you want to start polling.
   For example, enter 21:45 for 9:45 PM.
   Press **OK**.
5. Enter the fax number you are polling.
6. Press **Mono Start** or **Colour Start**.
   The machine makes the polling call at the time you entered.

Sequential polling (Monochrome only)

Sequential polling lets you request documents from several fax machines in one operation.

1. Press (**Fax**).
2. Press ▲ or ▼ to choose `Polling RX`.
3. Press ◀ or ▶ to choose `Standard`, `Secure` or `Timer`.
   Press **OK**.
4. Do one of the following:
   - If you chose `Standard`, press **OK**, go to step ❺.
   - If you chose `Secure`, enter a four-digit number, press **OK**, go to step ❺.
   - If you chose `Timer`, enter the time (24-hour format) you want to begin polling and press **OK**, go to step ❺.
5. Press ▲ or ▼ to choose `Broadcasting`.
   Press **OK**.
6. Do one of the following:
   - Press ▲ or ▼ to choose `Add Number` and enter a number using a dial pad.
     Press **OK**.
   - Press ▲ or ▼ to choose `Speed Dial` and **OK**. Press ▲ or ▼ to choose `Alphabetical Order` or `Numerical Order` and **OK**.
     Press ▲ or ▼ to select a number and **OK**.
7. Repeat steps ❻ for all the fax numbers you want to poll, and then press ▲ or ▼ to choose `Complete`.
   Press **OK**.
8. Press **Mono Start**.
   The machine polls each number or group in turn for a document.

Press **Stop/Exit** while the machine is dialling to cancel the polling process.

To cancel all sequential polling receive jobs, see *Checking and cancelling waiting jobs* on page 35.

Polled transmit (Monochrome only)

Polled transmit lets you set up your machine to wait with a document so another fax machine can call and retrieve it.

The document will be stored and can be retrieved by any other fax machine until you delete it from the memory. (See *Checking and cancelling waiting jobs* on page 35.)

Setup for polled transmit

1. Press (**Fax**).
2. Load your document.
3. Press ▲ or ▼ to choose `Polled TX`.
4. Press ◀ or ▶ to choose `Standard`.
   Press **OK**.
5. Press ▲ or ▼ to choose any settings you want to change.
   Press **OK**.
   After each setting is accepted, you can continue to change more settings.
6. Press **Mono Start**.

Setup for polled transmit with secure code

Secure Polling lets you restrict who can get the documents you set up to be polled.

Secure Polling only works with Brother fax machines. If another person wants to retrieve a fax from your machine, they will have to enter the secure code.

1. Press (**Fax**).
2. Load your document.
3. Press ▲ or ▼ to choose `Polled TX`.
4. Press ◀ or ▶ to choose `Secure`.
   Press **OK**.
5. Enter a four-digit number.
   Press **OK**.
6. Press ▲ or ▼ to choose any settings you want to change.
   Press **OK**.
   After each setting is accepted, you can continue to change more settings.
7. Press **Mono Start**.

Section III

Copy

Making copies 78

13 Making copies

How to copy

Entering Copy mode

When you want to make a copy, press (**Copy**) to illuminate it in green.

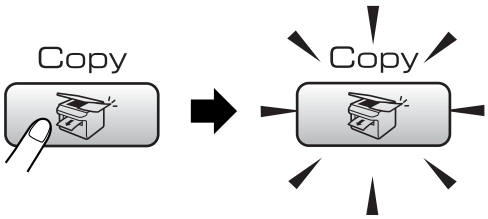

The LCD shows:

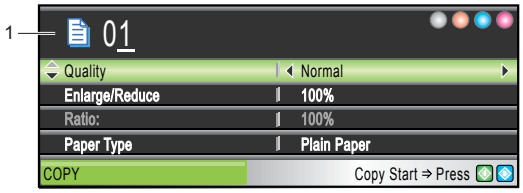

1 No. of Copies
You can enter the number of copies you want by using the dial pad.

Press ▲ or ▼ to scroll through the **Copy** key options.

- `Quality` (See page 79.)
- `Enlarge/Reduce` (See page 79.)
- `Paper Type` (See page 82.)
- `Paper Size` (See page 82.)
- `Brightness` (See page 81.)
- `Contrast` (See page 82.)
- `RED Adjust` (See page 82.)
- `GREEN Adjust` (See page 82.)
- `BLUE Adjust` (See page 82.)
- `Stack/Sort` (See page 81.)
- `Page Layout` (See page 80.)
- `Set New Default` (See page 83.)
- `Factory Reset` (See page 83.)

When the option you want is highlighted, press **OK**.

Note

The default setting is Fax mode. You can change the amount of time that the machine stays in Copy mode after the last copy operation. (See *Mode Timer* on page 21.)

Making a single copy

1. Press (**Copy**).
2. Load your document.
   (See *Loading documents* on page 9.)
3. Press **Mono Start** for Monochrome copy or **Colour Start** for colour copy.

Making multiple copies

You can make up to 99 copies.

1. Press (**Copy**).
2. Load your document.
   (See *Loading documents* on page 9.)
3. Enter the number of copies you want.
4. Press **Mono Start** or **Colour Start**.

Note

To sort the copies, press ▲ or ▼ to choose `Stack/Sort`. (See *Sorting copies using the ADF* on page 81.)

Stop copying

To stop copying, press **Stop/Exit**.

Copy settings

You can change the copy settings temporarily for the next copy.

The machine returns to its default settings after 1 minute, or if the Mode Timer returns the machine to Fax mode. (See *Mode Timer* on page 21.)

If you have finished choosing settings, press **Mono Start** or **Colour Start**.

If you want to choose more settings, press ▲ or ▼.

Note

You can save some of the settings that you use most often by setting them as default. These settings will stay until you change them again. (See *Setting your changes as a new default* on page 83.)

Changing copy speed and quality

You can choose from a range of quality. The factory setting is `Normal`.

- `Fast`

  Fast copy speed and lowest amount of ink used. Use to save time printing documents to be proof-read, large documents or many copies.

- `Normal`

  Normal is the recommended mode for ordinary print outs. This produces good copy quality with good copy speed.

- `Best`

  Use best mode to copy precise images such as photographs. This provides the highest resolution and slowest speed.

1. Press (**Copy**).
2. Load your document.
3. Enter the number of copies you want.
4. Press ▲ or ▼ to choose `Quality`.
5. Press ◀ or ▶ to choose `Fast`, `Normal` or `Best`.
   Press **OK**.
6. If you do not want to change additional settings, press **Mono Start** or **Colour Start**.

Enlarging or reducing the image copied

You can choose an enlargement or reduction ratio.

1. Press (**Copy**).
2. Load your document.
3. Enter the number of copies you want.
4. Press ▲ or ▼ to choose `Enlarge/Reduce`.

5 Do one of the following:

- Press ◀ or ▶ to choose the enlargement or reduction ratio you want. Press **OK**.
- Press ◀ or ▶ to choose `Custom(25-400%)`. Press **OK** and then enter an enlargement or reduction ratio from `25%` to `400%`. Press **OK**.

  (For example, press **5 3** to enter `53%`.)

50%
69% A4→A5
78% LGL→LTR
83% LGL→A4
93% A4→LTR
97% LTR→A4
100%
104% EXE→LTR
142% A5→A4
186% 10x15cm→LTR
198% 10x15cm→A4
200%
Custom(25-400%)

6 If you do not want to change additional settings, press **Mono Start** or **Colour Start**.

Note

Page Layout Options are not available with `Enlarge/Reduce`.

Making N in 1 copies or a poster (page layout)

The N in 1 copy feature can help you save paper by letting you copy two or four pages onto one printed page.

You can also produce a poster. When you use the poster feature your machine divides your document into sections, then enlarges the sections so you can assemble them into a poster. If you want to print a poster, use the scanner glass.

Important

- Please make sure paper size is set to `Letter` or `A4`.
- You cannot use the Enlarge/Reduce setting with the N in 1 and Poster features.
- If you are producing multiple colour copies, N in 1 copy is not available.
- `(P)` means Portrait and `(L)` means Landscape.
- You can only make one poster copy at a time.

1 Press (**Copy**).

2 Load your document.

3 Enter the number of copies you want.

4 Press ▲ or ▼ to choose `Page Layout`.

5 Press ◀ or ▶ to choose `Off(1 in 1)`, `2 in 1 (P)`, `2 in 1 (L)`, `4 in 1 (P)`, `4 in 1 (L)` or `Poster(3 x 3)`.
Press **OK**.

6 If you do not want to change additional settings, press **Mono Start** or **Colour Start** to scan the page.
If you are making a poster or placed the document in the ADF, the machine scans the pages and starts printing.
If you are using the scanner glass, go to step ❼.

7 After the machine scans the page, press **1** to scan the next page.

8 Put the next page on the scanner glass. Press **OK**.
Repeat steps ❼ and ❽ for each page of the layout.

9 After all the pages have been scanned, press **2** to finish.

Place your document face down in the direction shown below.

■ **2 in 1 (P)**

■ **2 in 1 (L)**

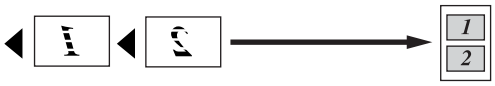

■ **4 in 1 (P)**

■ **4 in 1 (L)**

■ **Poster (3 x 3)**

You can make a poster size copy of a photograph.

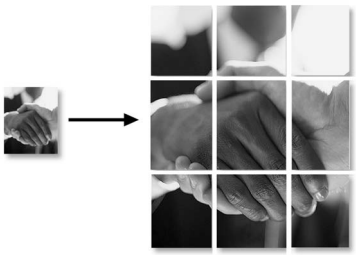

Sorting copies using the ADF

You can sort multiple copies. Pages will be stacked in the order 123, 123, 123, and so on.

1. Press (**Copy**).
2. Load your document.
3. Enter the number of copies you want.
4. Press ▲ or ▼ to choose `Stack/Sort`.
5. Press ◀ or ▶ to choose `Sort`.
   Press **OK**.
6. If you do not want to change additional settings, press **Mono Start** or **Colour Start**.

Note

`Page Layout` options are not available with `Sort`.

Adjusting Brightness, Contrast and Colour

Brightness

You can adjust the copy brightness to make copies darker or lighter.

1. Press (**Copy**).
2. Load your document.
3. Enter the number of copies you want.
4. Press ▲ or ▼ to choose `Brightness`.
5. Press ◀ or ▶ to make a darker or lighter copy.
   Press **OK**.
6. If you do not want to change additional settings, press **Mono Start** or **Colour Start**.

Contrast

You can adjust the copy contrast to help an image look sharper and more vivid.

1. Press (**Copy**).
2. Load your document.
3. Enter the number of copies you want.
4. Press ▲ or ▼ to choose `Contrast`.
5. Press ◀ or ▶ to change the contrast. Press **OK**.
6. If you do not want to change additional settings, press **Mono Start** or **Colour Start**.

Colour Saturation

1. Press (**Copy**).
2. Load your document.
3. Enter the number of copies you want.
4. Press ▲ or ▼ to choose `RED Adjust`, `GREEN Adjust` or `BLUE Adjust`.
5. Press ◀ or ▶ to change the colour saturation. Press **OK**.
6. Do one of the following:
   - If you want to change the saturation for another colour, go to step ❹.
   - If you do not want to change additional settings, press **Mono Start** or **Colour Start**.

Paper Options

Paper Type

If you are copying on special paper, set the machine for the type of paper you are using to get the best print quality.

1. Press (**Copy**).
2. Load your document.
3. Enter the number of copies you want.
4. Press ▲ or ▼ to choose `Paper Type`.
5. Press ◀ or ▶ to choose `Plain Paper`, `Inkjet Paper`, `Brother Photo`, `Other Photo` or `Transparency`. Press **OK**.
6. If you do not want to change additional settings, press **Mono Start** or **Colour Start**.

Paper Size

If copying on paper other than A4 size, you will need to change the paper size setting. You can copy only on Letter, Legal, A4, A5 or Photo [10 cm (W) × 15 cm (H)] paper.

1. Press (**Copy**).
2. Load your document.
3. Enter the number of copies you want.
4. Press ▲ or ▼ to choose `Paper Size`.
5. Press ◀ or ▶ to choose `Letter`, `Legal`, `A4`, `A5` or `10x15cm`. Press **OK**.
6. If you do not want to change additional settings, press **Mono Start** or **Colour Start**.

Setting your changes as a new default

You can save the copy settings for `Quality`, `Paper Type`, `Brightness`, `Contrast` and `RED Adjust`, `GREEN Adjust` or `BLUE Adjust` that you use most often by setting them the default settings. These settings will stay until you change them again.

1. Press (**Copy**).
2. Press ▲ or ▼ to choose your new setting. Press **OK**.
   Repeat this step for each setting you want to change.
3. After changing the last setting, press ▲ or ▼ to choose `Set New Default`. Press **OK**.
4. Press **1** to choose `Yes`.
5. Press **Stop/Exit**.

Restoring all settings to the factory settings

You can restore all the settings you have changed to the factory settings. These settings will stay until you change them again.

1. Press (**Copy**).
2. Press ▲ or ▼ to choose `Factory Reset`. Press **OK**.
3. Press **1** to choose `Yes`.
4. Press **Stop/Exit**.

‘Out of Memory’ message

If the `Out of Memory` message appears while scanning documents, press **Stop/Exit** to cancel or **Mono Start** or **Colour Start** to copy the scanned pages.

You will need to clear some jobs from the memory before you can continue.

To free up extra memory, do the following:

- Turn off Advanced Fax Operation. (See *Turning off Advanced Fax Operations* on page 68.)
- Print the faxes that are in the memory. (See *Printing a fax from the memory* on page 43.)

When you get an `Out of Memory` message, you may be able to make copies if you first print incoming faxes in the memory to restore the memory to 100%.

Section IV

Direct Photo Printing

Printing photos from a memory card or USB Flash memory drive 86

Printing photos from a camera 102

14 Printing photos from a memory card or USB Flash memory drive

PhotoCapture Center™ Operations

Printing from a memory card or USB Flash memory drive without a PC

Even if your machine is not connected to your computer, you can print photos directly from digital camera media or a USB Flash memory drive. (See *Print Images* on page 89.)

Scanning to a memory card or USB Flash memory drive without a PC

You can scan documents and save them directly to a memory card or USB Flash memory drive. (See *Scan to a memory card or USB Flash memory drive* on page 100.)

Using PhotoCapture Center™ from your computer

You can access a memory card or USB Flash memory drive that is inserted in front of the machine from your PC.

(See *PhotoCapture Center*™ for Windows® or *Remote Setup & PhotoCapture Center*™ for Macintosh® in the Software User's Guide on the CD-ROM.)

Using a memory card or USB Flash memory drive

Your Brother machine has media drives (slots) for use with popular digital camera media: CompactFlash®, Memory Stick®, Memory Stick Pro™, SecureDigital, MultiMediaCard™, xD-Picture Card™ and USB Flash memory drives.

CompactFlash®

Memory Stick®
Memory Stick Pro™

SecureDigital
MultiMediaCard™

xD-Picture Card™

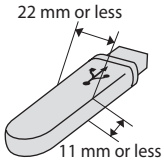

USB Flash memory drive

- miniSD™ can be used with a miniSD™ adapter.
- Memory Stick Duo™ can be used with a Memory Stick Duo™ adapter.
- Memory Stick Pro Duo™ can be used with a Memory Stick Pro Duo™ adapter.
- Adapters are not included with the machine. Contact a third party supplier for adapters.

The PhotoCapture Center™ feature lets you print digital photos from your digital camera at high resolution to get photo quality printing.

Memory cards or a USB Flash memory drive folder structure

Your machine is designed to be compatible with modern digital camera image files and memory cards; however, please read the points below to avoid errors:

- The image file extension must be .JPG (Other image file extensions like .JPEG, .TIF, .GIF and so on will not be recognized).
- PhotoCapture Center™ printing must be performed separately from PhotoCapture Center™ operations using the PC. (Simultaneous operation is not available.)
- IBM Microdrive™ is not compatible with the machine.
- The machine can read up to 999 files on a memory card or USB Flash memory drive.
- CompactFlash® Type II is not supported.
- This product supports xD-Picture Card™ Type M / Type H.
- This product supports Secure Digital High Capacity.
- The DPOF file on the memory cards must be in a valid DPOF format. (See *DPOF printing* on page 95.)

Please be aware of the following:

- When printing the INDEX or IMAGE, the PhotoCapture Center™ will print all the valid images, even if one or more images have been corrupted. The corrupted image will not be printed.
- (memory card users)

  Your machine is designed to read memory cards that have been formatted by a digital camera.

  When a digital camera formats a memory card it creates a special folder into which it copies image data. If you need to modify the image data stored on a memory card with your PC, we recommend that you do not modify the folder structure created by the digital camera. When saving new or modified image files to the memory card we also recommend you use the same folder your digital camera uses. If the data is not saved to the same folder, the machine may not be able to read the file or print the image.
- (USB Flash memory drive users)

  This machine supports USB Flash memory drives that have been formatted by Windows®.

Getting started

Firmly put a memory card or USB Flash memory drive into the correct slot.

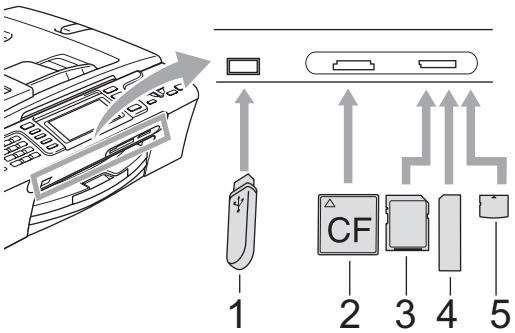

1 **USB Flash memory drive**

2 **CompactFlash®**

3 **SecureDigital, MultiMediaCard™**

4 **Memory Stick®, Memory Stick Pro™**

5 **xD-Picture Card™**

CAUTION

The USB direct interface supports only a USB Flash memory drive, a PictBridge compatible camera, or a digital camera that uses the USB mass storage standard. Any other USB devices are not supported.

PhotoCapture key indications:

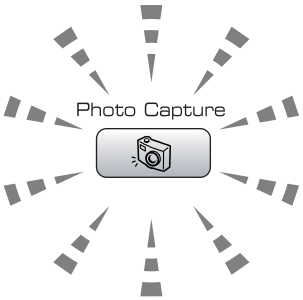

- **PhotoCapture** light is on, the memory card or USB Flash memory drive is properly inserted.
- **PhotoCapture** light is off, the memory card or USB Flash memory drive is not properly inserted.
- **PhotoCapture** light is blinking, the memory card or USB Flash memory drive is being read or written to.

CAUTION

DO NOT unplug the power cord or remove the media from the media drive (slot) or USB direct interface while the machine is reading or writing to the media (the **PhotoCapture** key is blinking). **You will lose your data or damage the card.**

The machine can only read one device at a time so do not put more than one media in the slot.

Entering PhotoCapture mode

After you insert the memory card or USB Flash memory drive, press the (**PhotoCapture**) key to illuminate it in green and display the PhotoCapture options on the LCD.

The LCD shows:

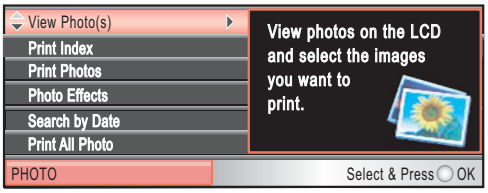

Press ▲ or ▼ to scroll through the PhotoCapture key options.

- `View Photo(s)` (See page 89.)
- `Print Index` (See page 90.)
- `Print Photos` (See page 90.)
- `Photo Effects` (See page 91.)
- `Search by Date` (See page 93.)
- `Print All Photos` (See page 94.)
- `Slide show` (See page 94.)
- `Trimming` (See page 95.)

Note

If your digital camera supports DPOF printing, see *DPOF printing* on page 95.

When the option you want is highlighted, press **OK**.

Print Images

CAUTION

Picture files cannot be previewed, printed, and searched when the folder is named in Chinese. Use alphabet and/or numbers for the folder name.

View Photo(s)

You can preview your photos on the LCD before you print them. If your photos are large files there may be a delay before each photo is displayed on the LCD.

1. Make sure you have put a memory card or USB Flash memory drive in the correct slot.
   Press (**PhotoCapture**).
2. Press ▲ or ▼ to choose `View Photo(s)`.
   Press **OK**.
3. Press ◀ or ▶ to choose your photo.

Note

Instead of scrolling through your photos, you can use the dial pad to enter the number of the image from the index page. (See *Print Index (Thumbnails)* on page 90.)

4. Press ▲ or ▼ to increase or decrease the number of copies.
5. Repeat step ❸ and step ❹ until you have chosen all the photos.

Note

Press **Clear/Back** to go back to the previous level.

6 After you have chosen all the photos, do one of the following:

- Press **OK** and change the print settings. (See page 96.)
- If you do not want to change any settings, press **Colour Start** to print.

Print Index (Thumbnails)

The PhotoCapture Center™ assigns numbers for images (such as No.1, No.2, No.3, and so on).

The PhotoCapture Center™ uses these numbers to identity each picture. You can print a thumbnail page (Index page with 5 images per line). This will show all the pictures on the memory card.

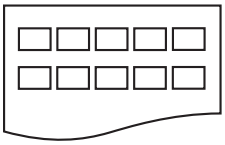

Note

- Only file names that are 8 characters or less will be printed correctly on the index sheet.
- File names cannot be printed correctly if they are Chinese. However it does not affect any functions.

1 Make sure you have put the memory card or USB Flash memory drive in the correct slot.

Press (**PhotoCapture**).

2 Press ▲ or ▼ to choose `Print Index`. Press **OK**.

3 Press ▲ or ▼ to choose the paper settings, `Paper Type` or `Paper Size`. Do one of the following.

- If you chose `Paper Type`, press ◀ or ▶ to choose the type of paper you are using, `Plain Paper`, `Inkjet Paper`, `Brother Photo` or `Other Photo`.

  Press **OK**.
- If you chose `Paper Size` and press ◀ or ▶ to choose the paper size you are using, `Letter` or `A4`.

  Press **OK**.
- If you do not want to change the paper settings, go to ❹.

4 Press **Colour Start** to print.

Print Photos

Before you can print an individual image, you have to know the image number.

1 Make sure you have put a memory card or USB Flash memory drive in the correct slot.

Press (**PhotoCapture**).

2 Print the Index. (See *Print Index (Thumbnails)* on page 90.)

3 Press ▲ or ▼ to choose `Print Photos`. Press **OK**.

4 Enter the image number that you want to print from the Index page (Thumbnails). Press **OK**.

5 Repeat step ❹ until you have entered the image numbers that you want to print.

Note

- You can enter the numbers at one time by using the ∗ key for a comma or the **#** key for a hyphen. For example, Enter **1**, ∗, **3**, ∗, **6** to print images No.1, No.3 and No.6. Enter **1**, **#**, **5** to print images No.1 to No.5.

- You can enter up to 12 characters (including commas) for the image numbers you want to print.

6 After you have chosen the image numbers, press **OK** again.

7 Enter the number of copies you want using the dial pad.

8 Do one of the following:

- Change the print settings. (See page 96.)
- If you do not want to change any settings, press **Colour Start** to print.

Photo Effects

You can edit and add effects to your photos and view them on the LCD before printing.

Note

- After adding each effect, you can enlarge the view of the image by pressing ⁎. To go back to the original size, press ⁎ again.
- The Photo Effects feature is supported by technology from Reallusion, Inc. REALLUSION

Auto Correct

Auto Correct is available for most photos. The machine decides the suitable effect for your photo.

1 Make sure you have put a memory card or USB Flash memory drive in the correct slot.
Press (**PhotoCapture**).

2 Press ▲ or ▼ to choose `Photo Effects`.
Press **OK**.

3 Press ◀ or ▶ to choose your photo.
Press **OK**.

4 Press ▲ or ▼ to choose `Auto Correct`.
Press **OK**.

5 Press **OK** and ▲ or ▼ to increase or decrease the number of copies.

6 Do one of the following.

- Press **OK** and change the print settings. (See page 96.)
- If you do not want to change any settings, press **Colour Start** to print.

Note

If `Remove Red-Eye` appears on the LCD, press **#** to remove red-eye from your photo.

Enhance Skin-Tone

Enhance Skin-Tone is best used for adjusting portrait photographs. It detects human skin colour in your photos and adjust the image.

1 Make sure you have put a memory card or USB Flash memory drive in the correct slot.
Press (**PhotoCapture**).

2 Press ▲ or ▼ to choose `Photo Effects`.
Press **OK**.

3 Press ◀ or ▶ to choose your photo.
Press **OK**.

4 Press ▲ or ▼ to choose `Enhance Skin-Tone`.
Press **OK**.

5 Do one of the following:

- Press **OK** if you do not want to change any settings.
- Press ▲ or ▼ to adjust the effect level manually.

  Press **OK** when you have finished.

6 Press ▲ or ▼ to increase or decrease the number of copies.

7 Do one of the following.
- Press **OK** and change the print settings. (See page 96.)
- If you do not want to change any settings, press **Colour Start** to print.

Enhance Scenery

Enhance Scenery is best used for adjusting landscape photographs. It highlights green and blue areas in your photo, so that the landscape looks more sharp and vivid.

1 Make sure you have put the memory card or USB Flash memory drive in the correct slot.
Press (**PhotoCapture**).

2 Press ▲ or ▼ to choose `Photo Effects`.
Press **OK**.

3 Press ◀ or ▶ to choose your photo.
Press **OK**.

4 Press ▲ or ▼ to choose `Enhance Scenery`.
Press **OK**.

5 Do one of the following:
- Press **OK** if you do not want to change any settings.
- Press ▲ or ▼ to adjust the effect level manually.
  Press **OK** when you have finished.

6 Press ▲ or ▼ to increase or decrease the number of copies.

7 Do one of the following.
- Press **OK** and change the print settings. (See page 96.)
- If you do not want to change any settings, press **Colour Start** to print.

Remove Red-Eye

The machine detects eyes in your photos and will remove red-eye from your photo.

Note

There are some cases when red-eye may not be removed.
- When the face is too small in the image.
- When the face is turning too far up, down, left or right.

1 Make sure you have put a memory card or USB Flash memory drive in the correct slot.
Press (**PhotoCapture**).

2 Press ▲ or ▼ to choose `Photo Effects`.
Press **OK**.

3 Press ◀ or ▶ to choose your photo.
Press **OK**.

4 Press ▲ or ▼ to choose `Remove Red-Eye`.
Press **OK**.
- When `Remove Red-Eye` is successful, the photo after effect is shown. The adjusted part is shown in a red frame.
- When `Remove Red-Eye` is unsuccessful, `Unable to Detect.` is shown. Press **OK** to go back to the previous level.

Note

Press **#** to try `Remove Red-Eye` once again.

5 Press **OK** and ▲ or ▼ to increase or decrease the number of copies.

6 Do one of the following.
- Press **OK** and change the print settings. (See page 96.)
- If you do not want to change any settings, press **Colour Start** to print.

Monochrome

You can convert your photo to monochrome.

1. Make sure you have put a memory card or USB Flash memory drive in the correct slot.
   Press (**PhotoCapture**).
2. Press ▲ or ▼ to choose `Photo Effects`.
   Press **OK**.
3. Press ◀ or ▶ to choose your photo.
   Press **OK**.
4. Press ▲ or ▼ to choose `Monochrome`.
   Press **OK**.
5. Press **OK** and ▲ or ▼ to increase or decrease the number of copies.
6. Do one of the following.
   - Press **OK** and change the print settings. (See page 96.)
   - If you do not want to change any settings, press **Colour Start** to print.

Sepia

You can convert the colour of your photo to sepia.

1. Make sure you have put a memory card or USB Flash memory drive in the correct slot.
   Press (**PhotoCapture**).
2. Press ▲ or ▼ to choose `Photo Effects`.
   Press **OK**.
3. Press ◀ or ▶ to choose your photo.
   Press **OK**.
4. Press ▲ or ▼ to choose `Sepia`.
   Press **OK**.
5. Press **OK** and ▲ or ▼ to increase or decrease the number of copies.
6. Do one of the following.
   - Press **OK** and change the print settings. (See page 96.)
   - If you do not want to change any settings, press **Colour Start** to print.

Search by Date

You can find your photos based on date.

1. Make sure you have put a memory card or USB Flash memory drive in the correct slot.
   Press (**PhotoCapture**).
2. Press ▲ or ▼ to choose `Search by Date`.
   Press **OK**.
3. Press ▲ or ▼ to choose the date that you want to search from.
   Press **OK**.
4. Press ◀ or ▶ to choose your photo.

Note

You can view photos with other dates by pressing ◀ or ▶ continuously. Press ◀ to view an older photo and ▶ to view a newer photo.

5. Press ▲ or ▼ to increase or decrease the number of copies.
6. Repeat step ❹ and step ❺ until you have chosen all your photos.
7. After you have chosen all your photos, do one of the following:
   - Press **OK** and change the print settings. (See page 96.)
   - If you do not want to change any settings, press **Colour Start** to print.

Print All Photos

You can print all the photos on your memory card.

1. Make sure you have put a memory card or USB Flash memory drive in the correct slot.
   Press (**PhotoCapture**).
2. Press ▲ or ▼ to choose `Print All Photos`.
   Press **OK**.
3. Enter the number of copies you want using the dial pad.
4. Do one of the following:
   - Change the print settings. (See page 96.)
   - If you do not want to change any settings, press **Colour Start** to print.

Slide show

You can view all your photos on the LCD using Slide show. You can also choose a photo during the operation.

1. Make sure you have put a memory card or USB Flash memory drive in the correct slot.
   Press (**PhotoCapture**).
2. Press ▲ or ▼ to choose `Slide show`.
   Press **OK**.
3. Press **Stop/Exit** to finish Slide show.

Printing a photo during a Slide show

1. Make sure you have put a memory card or USB Flash memory drive in the correct slot.
   Press (**PhotoCapture**).
2. Press ▲ or ▼ to choose `Slide show`.
   Press **OK**.
3. Press **OK** to stop at one image while Slide show is operating.
4. Press ▲ or ▼ to increase or decrease the number of copies.
5. Do one of the following:
   - Press **OK** and change the print settings. (See page 96.)
   - If you do not want to change any settings, press **Colour Start** to print.

Trimming

You can trim your photo and print a part of the image.

Note

If your photo is very small or of irregular proportions you may not be able to trim the photo. The LCD will display `Image Too Small.` or `Image Too Long..`

1. Make sure you have put a memory card or USB Flash memory drive in the correct slot.
   Press (**PhotoCapture**).
2. Press ▲ or ▼ to choose `Trimming`. Press **OK**.
3. Press ◀ or ▶ to choose your photo. Press **OK**.
4. Adjust the red frame on your photo. The part inside of the red frame will be printed.
   - Press ✳ or **#** to enlarge or reduce the frame size.
   - Press each arrow key to move the position of the frame.
   - Press **0** to rotate the frame.
   - Press **OK** when you have finished the frame setting.
5. Press ▲ or ▼ to increase or decrease the number of copies.
6. Do one of the following:
   - Press **OK** and change the print settings. (See page 96.)
   - If you do not want to change any settings, press **Colour Start** to print.

DPOF printing

DPOF stands for Digital Print Order Format.

Major digital camera manufacturers (Canon Inc., Eastman Kodak Company, Fuji Photo Film Co. Ltd., Matsushita Electric Industrial Co. Ltd. and Sony Corporation) created this standard to make it easier to print images from a digital camera.

If your digital camera supports DPOF printing, you will be able to choose on the digital camera display the images and number of copies you want to print.

When the memory card (CompactFlash®, Memory Stick®, Memory Stick Pro™, SecureDigital) with DPOF information is put into your machine, you can print the chosen image easily.

1. Make sure you have put a memory card in the correct slot.
   Press (**PhotoCapture**). The machine will ask you if you want to use DPOF setting.
   The DPOF file on the memory card must be in a valid DPOF format.
2. Press **1** to choose `Yes`.
3. Do one of the following:
   - Change the print settings. (See page 96.)
   - If you do not want to change any settings, press **Colour Start** to print.

Note

An Invalid DPOF File error can occur if the print order that was created on the camera has been corrupted. Delete and recreate the print order using your camera to correct this problem.

For instructions on how to delete or recreate the print order, refer to your camera manufacturer's support website or accompanying documentation.

PhotoCapture Center™ print settings

You can change the print settings temporarily for the next print.

The machine returns to its default settings after 3 minutes, or if the Mode Timer returns the machine to Fax mode. (See *Mode Timer* on page 21.)

Note

You can save the print settings you use most often by setting them as default. (See *Setting your changes as a new default* on page 99.)

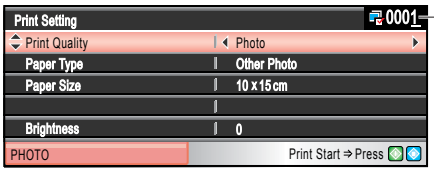

1 No. of prints

(For View Photo(s), Search by Date, Slide Show)

You can see the total number of photos that will be printed.

(For Print All Photos, Print Photos, Photo Effects, Trimming)

You can see the number of copies of each photo that will be printed.

(For DPOF printing) This does not appear.

Menu Selections	Options 1	Options 2	Page
Print Quality (Does not appear for DPOF printing)	Normal/Photo	—	97
Paper Type	Plain Paper/Inkjet Paper/ Brother Photo/Other Photo	—	97
Paper Size	Letter/A4/10x15cm/13x18cm	(When A4 or Letter is chosen) 10 x 8cm/13 x 9cm/15 x 10cm/ 18 x 13cm/20 x 15cm/ Max. Size	97
Brightness (Does not appear when Photo Effects is chosen.)	◀0 Dark Light▶	—	98
Contrast (Does not appear when Photo Effects is chosen.)	◀0 - + ▶	—	98

Menu Selections	Options 1	Options 2	Page
Color Enhance (Does not appear when Photo Effects is chosen.)	On/Off White Balance ◀0-+▶ Sharpness ◀0-+▶ Color Density ◀0-+▶ Exit	—	98
Cropping	On/Off	—	99
Borderless	On/Off	—	99
Set New Default	Yes/No	—	99
Factory Reset	Yes/No	—	99

Print Speed and Quality

1. Press ▲ or ▼ to choose Print Quality.
2. Press ◀ or ▶ to choose Normal or Photo.
   Press **OK**.
3. If you do not want to change additional settings, press **Colour Start** to print.

Paper options

Paper Type

1. Press ▲ or ▼ to choose Paper Type.
2. Press ◀ or ▶ to choose the paper type you are using, Plain Paper, Inkjet Paper, Brother Photo or Other Photo.
   Press **OK**.
3. If you do not want to change additional settings, press **Colour Start** to print.

Paper and print size

1. Press ▲ or ▼ to choose Paper Size.
2. Press ◀ or ▶ to choose the paper size you are using, Letter, 10x15cm, 13x18cm or A4.
   Press **OK**.
3. If you chose Letter or A4, press ◀ or ▶ to choose the Print Size.
   Press **OK**.

Example: Printed Position for A4 paper

1 10 x 8cm	2 13 x 9cm	3 15 x 10cm
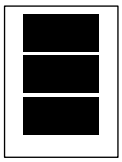	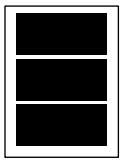	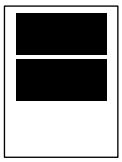
4 18 x 13cm	5 20 x 15cm	6 Max. Size
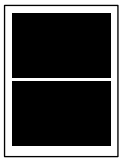	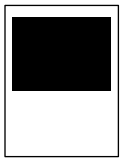	

4. If you do not want to change additional settings, press **Colour Start** to print.

Adjusting Brightness, Contrast and Colour

Brightness

1. Press ▲ or ▼ to choose `Brightness`.
2. Press ◀ or ▶ to make a darker or lighter print.
   Press **OK**.
3. If you do not want to change additional settings, press **Colour Start** to print.

Contrast

You can choose the contrast setting. More contrast will make an image look sharper and more vivid.

1. Press ▲ or ▼ to choose `Contrast`.
2. Press ◀ or ▶ to change the contrast.
   Press **OK**.
3. If you do not want to change additional settings, press **Colour Start** to print.

Colour Enhancement

You can turn on the colour enhancement feature to print more vivid images. Printing time will be slower.

1. Press ▲ or ▼ to choose `Color Enhance`.
   Press **OK**.
2. Do one of the following:
   - If you want to customize the White Balance, Sharpness or Colour Density, press ◀ or ▶ to choose `On`, and then go to step ❸.
   - If you do not want to customize, press ◀ or ▶ to choose `Off`.

     Press **OK** and then go to step ❻.
3. Press ▲ or ▼ to choose `White Balance`, `Sharpness` or `Color Density`.
4. Press ◀ or ▶ to adjust the degree of the setting.
   Press **OK**.
5. Do one of the following:
   - If you want to customize another colour enhancement, press ▲ or ▼ to choose another option.
   - If you want to change other settings, press ▲ or ▼ to choose `Exit`, and then press **OK**.
6. If you do not want to change additional settings, press **Colour Start** to print.

Note

- **White Balance**

  This setting adjusts the hue of the white areas of an image. Lighting, camera settings and other influences will effect the appearance of white. The white areas of a picture may be slightly pink, yellow or some other colour. By using this setting, you can correct that effect and bring the white areas back to pure white.
- **Sharpness**

  This setting enhances the detail of an image, similar to adjusting the fine focus on a camera. If the image is not in true focus and you cannot see the fine details of the picture, then adjust the sharpness.
- **Colour Density**

  This setting adjusts the total amount of colour in the image. You can increase or decrease the amount of colour in an image to improve a washed out or weak picture.

Cropping

If your photo is too long or wide to fit the available space on your chosen layout, part of the image will automatically be cropped.

The factory setting is `On`. If you want to print the whole image, turn this setting to `Off`.

1. Press ▲ or ▼ to choose `Cropping`.
2. Press ◀ or ▶ to choose `Off` (or `On`). Press **OK**.
3. If you do not want to change additional settings, press **Colour Start** to print.

Cropping: On

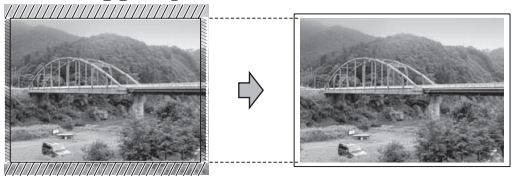

Cropping: Off

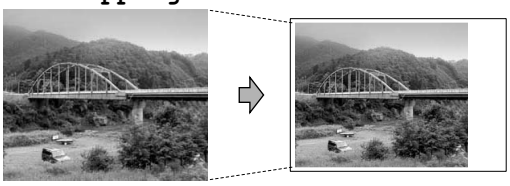

Borderless printing

This feature expands the printable area to the edges of the paper. Printing time will be slightly slower.

1. Press ▲ or ▼ to choose `Borderless`.
2. Press ◀ or ▶ to choose `Off` (or `On`). Press **OK**.
3. If you do not want to change additional settings, press **Colour Start** to print.

Setting your changes as a new default

You can save the print settings you use most often by setting them as the default settings. These settings will stay until you change them again.

1. Press ▲ or ▼ to choose your new setting. Press **OK**.
   Repeat this step for each setting you want to change.
2. After changing the last setting, press ▲ or ▼ to choose `Set New Default`. Press **OK**.
3. Press **1** to choose `Yes`.
4. Press **Stop/Exit**.

Restoring all settings to the factory settings

You can restore all the settings you have changed to the factory settings. These settings will stay until you change them again.

1. Press ▲ or ▼ to choose `Factory Reset`. Press **OK**.
2. Press **1** to choose `Yes`.
3. Press **Stop/Exit**.

Scan to a memory card or USB Flash memory drive

Entering Scan mode

When you want to scan to a memory card or USB Flash memory drive, press (**Scan**).

The LCD shows:

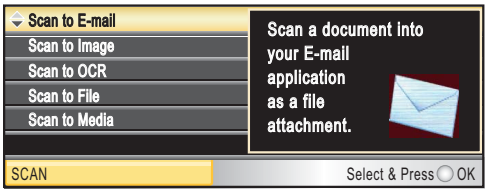

Press ▲ or ▼ to choose `Scan to Media`.

Press **OK**.

If you are not connected to your computer only the Scan to Media selection will appear on the LCD.

(See *Scanning* for Windows® or Macintosh® in the Software User's Guide on the CD-ROM for details about the other menu options.)

How to scan to a memory card or USB Flash memory drive

You can scan monochrome and colour documents into a memory card or USB Flash memory drive. Monochrome documents will be stored in PDF (*.PDF) or TIFF file formats (*.TIF). Colour documents may be stored in PDF (*.PDF) or JPEG (*.JPG) file formats. The factory setting is `Color 150 dpi` and the default file format is PDF. The machine automatically creates file names based on the current date.(For details, see Quick Setup Guide.) For example, the fifth image scanned on July 1, 2007 would be named 01070705.PDF. You can change the colour and quality.

Quality	Selectable File Format
Color 150 dpi	JPEG / PDF
Color 300 dpi	JPEG / PDF
Color 600 dpi	JPEG / PDF
B/W 200x100 dpi	TIFF / PDF
B/W 200 dpi	TIFF / PDF

1. Insert a CompactFlash®, Memory Stick®, Memory Stick Pro™, SecureDigital, MultiMediaCard™, xD-Picture Card™ or USB Flash memory drive into your machine.

WARNING

DO NOT take out the memory card while **PhotoCapture** is blinking to avoid damaging the card or data stored on the card.

2. Load your document.
3. Press (**Scan**).
4. Press ▲ or ▼ to choose `Scan to Media`.
   Press **OK**.
5. Do one of the following.
   - To change the quality, go to step 6.
   - Press **Mono Start** or **Colour Start** to start scanning without changing additional settings.
6. Press ▲ or ▼ to choose `Color 150 dpi`, `Color 300 dpi`, `Color 600 dpi`, `B/W 200x100 dpi` or `B/W 200 dpi`.
   Press **OK**.

7 Do one of the following.

- To change the file type, go to step ❽.
- Press **Mono Start** or **Colour Start** to start scanning without changing additional settings.

8 Press ▲ or ▼ to choose `JPEG`, `PDF` or `TIFF`.
Press **OK**.

Note

- If you chose colour in the resolution setting, you cannot choose `TIFF`.
- If you chose monochrome in the resolution setting, you cannot choose `JPEG`.

9 Do one of the following.

- To change the file name, go to step ❿.
- Press **Mono Start** or **Colour Start** to start scanning without changing additional settings.

10 The file name is set automatically however, you can set a name of your choice using the dial pad. You can only change the first 6 digits.
Press **OK**.

Note

Press **Clear/Back** to delete the current name.

11 Press **Mono Start** or **Colour Start**.

Understanding the Error Messages

Once you are familiar with the types of errors that can occur while you are using PhotoCapture Center™, you can easily identify and troubleshoot any problems.

- `Hub is Unusable.`

  This message will appear if a Hub or USB Flash memory drive with a Hub has been put into the USB direct interface.

- `Media Error`

  This message will appear if you put in a memory card that is either bad or not formatted, or when there is a problem with the media drive. To clear this error, take out the memory card.

- `No File`

  This message will appear if you try to access a memory card or USB Flash memory drive in the drive (slot) that does not contain a .JPG file.

- `Out of Memory`

  This message will appear if you are working with images that are too large for the machine's memory. This message will also appear when a memory card or USB Flash memory drive you are using does not have enough space available for the scanned document.

- `Media is Full.`

  This message will appear if you are trying to save more than 999 files in a memory card or USB Flash memory drive.

- `Unusable Device`

  This message will appear if a USB device or USB Flash memory drive that is not supported has been connected to the USB direct interface. For more information, visit us at http://solutions.brother.com. This message will also appear if you connect a broken device to the USB direct interface.

15 Printing photos from a camera

Printing photos directly from a PictBridge camera

Your Brother machine supports the PictBridge standard, allowing you to connect to and print photos directly from any PictBridge compatible digital camera.

If your camera is using the USB Mass Storage standard, you can also print photos from a digital camera without PictBridge. See *Printing photos directly from a digital camera (without PictBridge)* on page 104.

PictBridge requirements

To avoid errors, remember the following points:

- The machine and the digital camera must be connected using a suitable USB cable.
- The image file extension must be .JPG (other image file extensions like .JPEG, .TIF, .GIF and so on will not be recognized).
- PhotoCapture Center™ operations are not available when using the PictBridge feature.

Setting your digital camera

Make sure your camera is in PictBridge mode. Some of the settings listed below may not be available for your PictBridge compatible digital camera.

Camera Menu Selections	Options
Paper Size	Letter, A4, 10x15cm, Printer Settings (Default setting) [2]
Paper Type	Plain Paper, Glossy Paper, Inkjet Paper, Printer Settings (Default setting) [2]
Layout	Borderless: On, Borderless: Off, Printer Settings (Default setting) [2]
DPOF setting [1]	-
Print Quality	Normal, Fine, Printer Settings (Default setting) [2]
Color Enhancement	On, Off, Printer Settings (Default setting) [2]

[1] See *DPOF printing* on page 103 for more details.

[2] If your camera is set to use the Printer Settings (Default setting), the machine will print your photo using the following settings.

Settings	Options
Paper Size	10x15cm
Paper Type	Glossy Paper
Layout	Borderless: On
Print Quality	Fine
Color Enhancement	Off

- When your camera does not have any menu selections, this setting is also used.
- The names and availability of each setting depends on the specification of your camera.

Please refer to the documentation supplied with your camera for more detailed information on changing PictBridge settings.

Printing Images

Note

Remove any memory cards or USB Flash memory drive from the machine before connecting a digital camera.

1. Make sure that your camera is turned off. Connect your camera to the USB direct interface (1) on the machine using the USB cable.

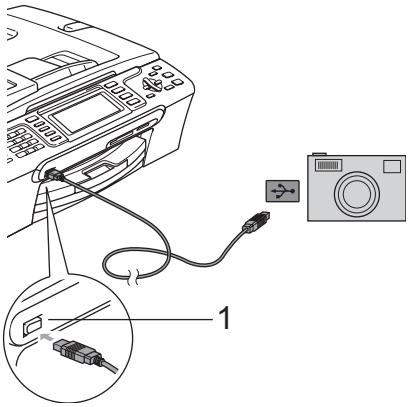

1 USB direct interface

2. Turn on the camera.
   When the machine has recognized the camera, the LCD shows `Camera Connected`.

3. Choose the photo you want to print following the instructions from your camera.
   When the machine starts printing a photo, the LCD will show `Printing`.

WARNING

To prevent damage to your machine, do not connect any device other than a digital camera or USB Flash memory drive to the USB direct interface.

DPOF printing

DPOF stands for Digital Print Order Format.

Major digital camera manufacturers (Canon Inc., Eastman Kodak Company, Fuji Photo Film Co. Ltd., Matsushita Electric Industrial Co. Ltd. and Sony Corporation) created this standard to make it easier to print images from a digital camera.

If your digital camera supports DPOF printing, you will be able to choose on the digital camera display the images and number of copies you want to print.

Printing photos directly from a digital camera (without PictBridge)

If your camera supports the USB Mass Storage standard, you can connect your camera in storage mode. This enables you to print photos from your camera.

If you would like to print photos in PictBridge mode, see *Printing photos directly from a PictBridge camera* on page 102.

Note

The name, availability and operation differ among digital cameras. Please refer to the documentation supplied with your camera for detailed information, such as how to switch from PictBridge mode to USB mass storage mode.

Printing Images

Note

Remove any memory cards or USB Flash memory drive from the machine before connecting a digital camera.

1. Make sure that your camera is turned off. Connect your camera to the USB direct interface (1) on the machine using the USB cable.

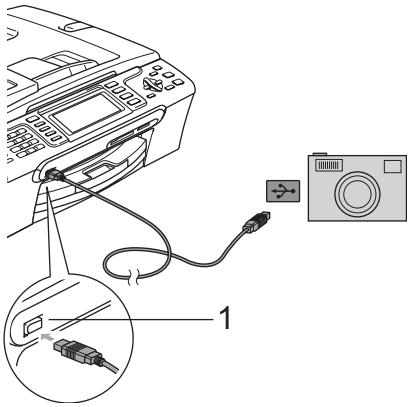

1 USB direct interface

2. Turn on the camera.
   For print settings, see *Print Images* on page 89.

3. Follow the steps in *Print Images* on page 89.

WARNING

To prevent damage to your machine, do not connect any device other than a digital camera or USB Flash memory drive to the USB direct interface.

Understanding the Error Messages

Once you are familiar with the types of errors that can occur while you are printing from a camera, you can easily identify and troubleshoot any problems.

- `Out of Memory`

  This message will appear if you are working with images that are too large for the machine's memory.

- `Unusable Device`

  This message will appear if you connect a camera which is not in PictBridge mode nor using the USB Mass Storage standard. This message will also appear if you connect a broken device to the USB direct interface.

For more detailed solutions see *Error messages* on page 125.

Section V

Software

Software and Network features 108

16 Software and Network features

The CD-ROM includes the Software User's Guide and Network User's Guide for features available when connected to a computer (for example, printing and scanning). These guides have easy to use links that, when clicked, will take you directly to a particular section.

You can find information on these features:

- Printing
- Scanning
- ControlCenter3 (for Windows®)
- ControlCenter2 (for Macintosh®)
- Remote Setup
- Faxing from your computer
- PhotoCapture Center™
- Network Printing
- Network Scanning
- Wireless Network Users

How to read HTML User's Guide

This is a quick reference for using the HTML User's Guide.

(For Windows®)

Note

If you have not installed the software, see *Viewing Documentation* on page 3.

1. From the **Start** menu, point to **Brother**, **MFC-XXXX** (where XXXX is your model number) from the programs group, then click **User's Guides in HTML format**.
2. Click **SOFTWARE USER'S GUIDE** (or **NETWORK USER'S GUIDE**) from the top menu.

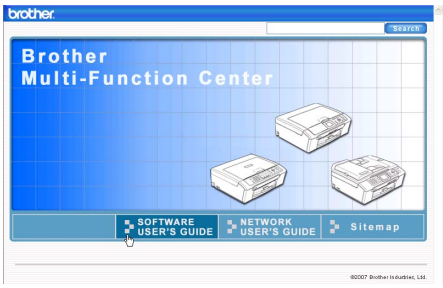

3. Click the heading you would like to view from the list at the left of the window.

(For Macintosh®)

1. Make sure your Macintosh® is turned on. Insert the Brother CD-ROM into your CD-ROM drive.
2. Double-click the **Documentation** icon.
3. Double-click your language folder, and then double-click the top page file.
4. Click **SOFTWARE USER'S GUIDE** (or **NETWORK USER'S GUIDE**) in the top menu, and then click the heading you would like to read from the list at the left of the window.

Section VI

Appendixes

Safety and Legal	110
Troubleshooting and Routine Maintenance	119
Menu and Features	145
Specifications	161
Glossary	176

A Safety and Legal

Choosing a location

Put your machine on a flat, stable surface that is free of vibration and shocks, such as a desk. Put the machine near a telephone socket and a standard grounded electrical socket. Choose a location where the temperature remains between 10° C and 35° C.

CAUTION

- Avoid placing your machine in a high-traffic area.
- Avoid placing your machine on a carpet.
- DO NOT put the machine near heaters, air conditioners, refrigerators, medical equipment, chemicals or water.
- DO NOT expose the machine to direct sunlight, excessive heat, moisture, or dust.
- DO NOT connect your machine to electrical sockets controlled by wall switches or automatic timers.
- Disruption of power can wipe out information in the machine's memory.
- DO NOT connect your machine to electrical sockets on the same circuit as large appliances or other equipment that might disrupt the power supply.
- Avoid interference sources, such as other cordless telephone systems or speakers.

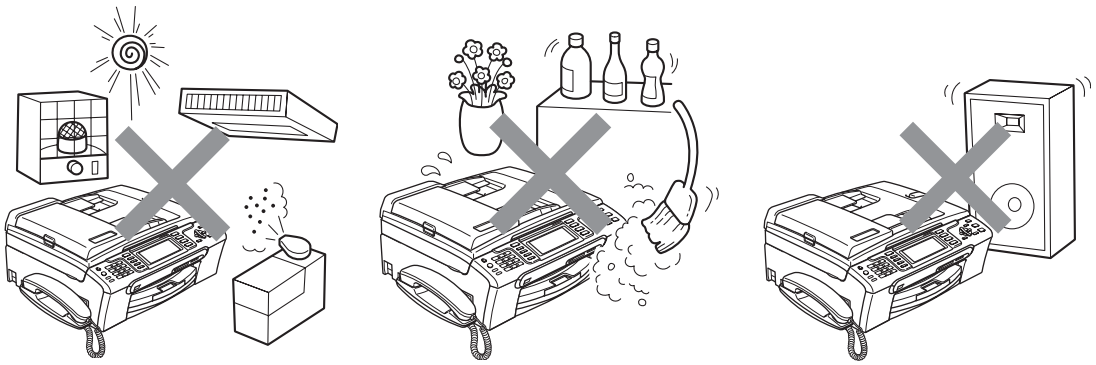

To use the machine safely

Please keep these instructions for later reference and read them before attempting any maintenance.

Note

If there are faxes in the machine's memory, you need to print them or save them before you unplug the machine from the electrical socket before for more than 24 hours. (To print the faxes in memory, see *Printing a fax from the memory* on page 43. To save the faxes in memory, see *Transferring faxes to another fax machine* on page 129 or *Transferring faxes to your PC* on page 129.)

WARNING

There are high voltage electrodes inside the machine. Before you clean the inside of the machine, make sure you have unplugged the telephone line cord first and then the power cord from the electrical socket. Doing this will prevent an electrical shock.

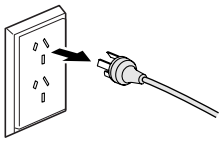

DO NOT handle the plug with wet hands. Doing this might cause an electrical shock.

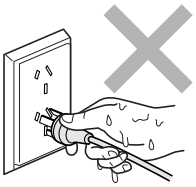

DO NOT pull on the middle of the AC power cord. Doing this might cause an electrical shock.

DO NOT put your hands on the edge of the machine under the document cover or the scanner cover. Doing this may cause injury.

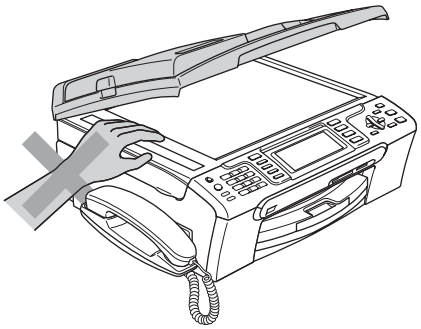

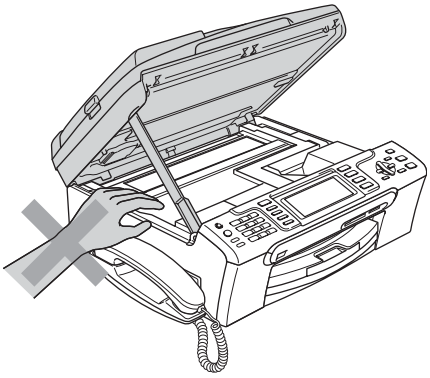

DO NOT put your hands on the edge of the paper tray under the output paper tray cover. Doing this may cause injury.

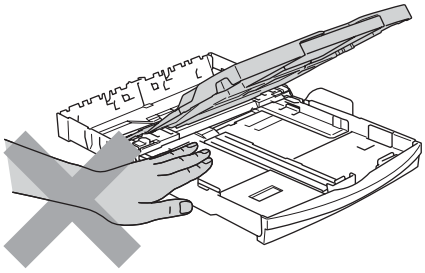

DO NOT touch the paper feed roller. Doing this may cause injury.

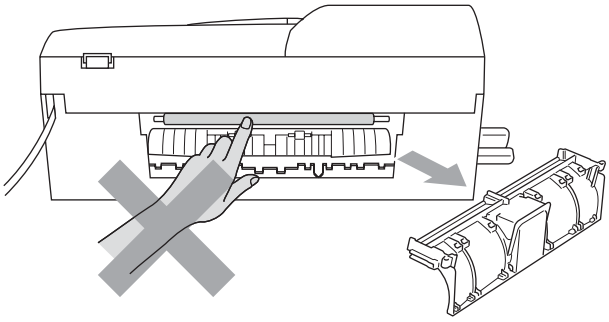

DO NOT touch the area shaded in the illustration. Doing this may cause injury.

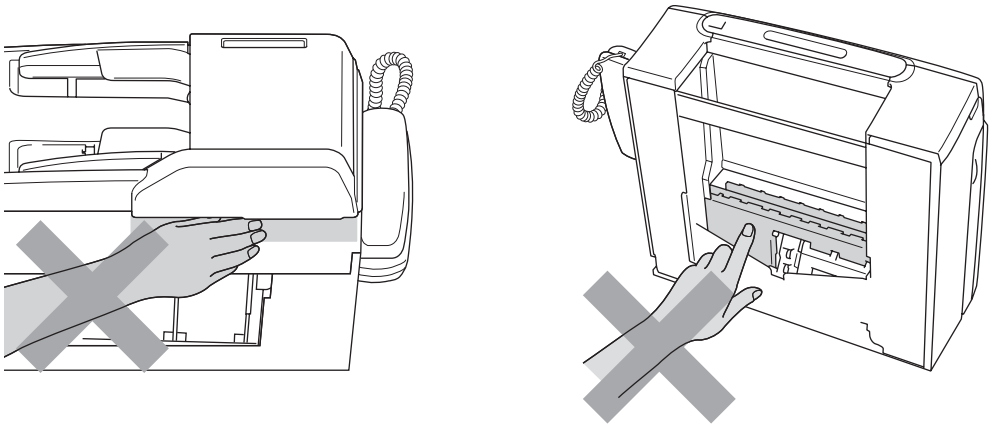

When moving the machine you must lift it from the base, by placing a hand at each side of the unit as shown in the illustration. DO NOT carry the machine by holding the scanner cover.

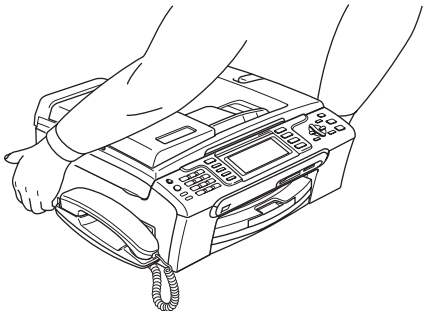

DO NOT use flammable substances or any type of spray to clean the inside or outside of the machine. Doing this may cause a fire or electrical shock.

If the machine becomes hot, releases smoke, or generates any strong smells, immediately unplug the machine from the electrical socket. Call your Brother dealer or Brother Customer Service.

If metal objects, water or other liquids get inside the machine, immediately unplug the machine from the electrical socket. Call your Brother dealer or Brother Customer Service.

WARNING

- Use caution when installing or modifying telephone lines. Never touch telephone wires or terminals that are not insulated unless the telephone line has been unplugged at the wall socket. Never install telephone wiring during a lightning storm. Never install a telephone wall socket in a wet location.
- This product must be installed near an electrical socket that is easily accessible. In case of an emergency, you must unplug the power cord from the electrical socket to shut off the power completely.
- Always make sure the plug is fully inserted.

WARNING

IMPORTANT SAFETY INSTRUCTIONS

When using your telephone equipment, basic safety precautions should always be followed to reduce the risk of fire, electric shock and injury to people, including the following:

1 DO NOT use this product near water, for example, near a bath tub, wash bowl, kitchen sink or washing machine, in a wet basement or near a swimming pool.

2 Avoid using this product during an electrical storm. There may be a remote risk of electric shock from lightning.

3 DO NOT use this product to report a gas leak in the vicinity of the leak.

Important Information

Important Safety Instructions

1 Read all of these instructions.

2 Save them for later reference.

3 Follow all warnings and instructions marked on the product.

4 Unplug this product from the wall outlet before cleaning the outside of the machine and the scanner glass. Do not use liquid or aerosol cleaners. Use a damp cloth for cleaning.

5 Do not place this product near water.

6 Do not place this product on an unstable cart, stand, or table. The product may drop, causing serious damage to the product.

7 Slots and openings in the cabinet and the back or bottom are provided for ventilation; to ensure reliable operation of the product and to protect it from overheating, these openings must not be blocked or covered. The openings should never be blocked by placing the product on a bed, sofa, rug, or other similar surface. This product should never be placed near or on a radiator or heater. This product should never be placed in a built-in installation unless proper ventilation is provided.

8 This product should be connected to an AC power source within the range indicated on the rating label. Do NOT connect it to a DC power source. If you are not sure, contact a qualified electrician.

9 This product is equipped with a 2-wire grounding type plug or a 3-wire grounding type plug (Only for Singapore, Malaysia, Hong Kong and India), a plug having two or three pins. This plug will only fit into only a grounding-type power outlet. This is a safety feature. If you are unable to insert the plug into the outlet, contact your electrician to replace your obsolete outlet. Do not defeat the purpose of the grounding-type plug.

10 Do not place anything on top of the power cord including this machine. Do not allow the power cord to be stepped on.

11 If an extension cord is used with this product, make sure that the total ampere ratings on the products plugged into the extension cord do not exceed the extension cord ampere rating.

12 Do not place anything in front of the machine that will block received faxes. Do not place anything in the path of received faxes.

13 Do not touch a document during printing.

14 Never push objects of any kind into this product through cabinet slots, since they may touch dangerous voltage points or short out parts resulting in the risk of fire or electric shock. Never spill liquid of any kind on the product.

15 Do not attempt to service this product yourself, as opening or removing covers may expose you to dangerous voltage points and/or other risks, and may void your warranty. Please refer all servicing to our Authorized Service Personnel. A list of Authorized Service Centres has been included for your convenience, or you may contact the Brother Dealer for Service.

16 Unplug this product from the wall outlet and refer servicing to Authorized Service Personnel under the following conditions:

- If the power cord is damaged or frayed.
- If the product has been spilled by liquid.
- If the product has been exposed to rain or water.
- If the product does not operate normally when the operating instructions are followed. Adjust only those controls that are covered by the operating instructions. Improper adjustment of other controls may result in damage and will often require extensive work by a qualified technician to restore the product to normal operation.
- If the product has been dropped or the cabinet has been damaged.
- If the product exhibits a distinct change in performance, indicating a need for service.

17 To protect your product against power surges, we recommend the use of a power protection device (Surge Protector).

WARNING

For protection against the risk of electrical shock, always disconnect all cables from the wall outlet before servicing, modifying or installing the equipment.

This equipment may not be used on coin service lines provided by the telephone company or connected to party lines.

Brother cannot accept any financial or other responsibilities that may be the result of your use of this information, including direct, special or consequential damages. There are no warranties extended or granted by this document.

IMPORTANT-For Your Safety

To ensure safe operation the two-pin plug or the three-pin plug supplied must be inserted only into a standard two-pin power point or three-pin power point which is effectively grounded through the normal household wiring.

Extension cords used with the equipment must be two-conductor or three-conductor and be correctly wired to provide connection to ground. Incorrectly wired extension cords are a major cause of fatalities.

The fact that the equipment operates satisfactorily does not imply that the power is grounded and that the installation is completely safe. For your safety, if in any doubt about the effective grounding of the power, consult a qualified electrician.

Disconnect device

This product must be installed near an electrical socket that is easily accessible. In case of emergencies, you must disconnect the power cord from the electrical socket to shut off power completely.

Legal limitations for copying

It is an offence to make reproductions of certain items or documents with the intent to commit fraud. This memorandum is intended to be a guide rather than a complete list. We suggest you check with relevant legal authorities if in doubt about a particular item or document.

The following are examples of documents which may not be copied:

- Money
- Bonds or other certificates of debt
- Certificates of Deposit
- Armed Forces Service or Draft papers
- Passports
- Postage Stamps (cancelled or uncancelled)
- Immigration Papers
- Welfare documents
- Cheques or Drafts drawn by Governmental Agencies
- Identification Documents, badges or insignias
- Licences and Certificates of Title to motor vehicles

Copyrighted works cannot be copied. Sections of a copyrighted work can be copied for ‘fair dealing’. Multiple copies would indicate improper use.

Works of art should be considered the equivalent of copyrighted works.

Licenses and Certificates of Title to motor vehicles may not be copied under certain state/provincial laws.

Trademarks

The Brother logo is a registered trademark of Brother Industries, Ltd.

Brother is a registered trademark of Brother Industries, Ltd.

Multi-Function Link is a registered trademark of Brother International Corporation.

© 2007 Brother Industries, Ltd. All rights reserved.

Microsoft and Windows are registered trademarks of Microsoft corporation in the U.S. and other countries.

Windows Vista is either a registered trademark or trademark of Microsoft Corporation in the United States and/or other countries.

Macintosh and TrueType are registered trademarks of Apple Inc.

Presto! PageManager is a registered trademark of NewSoft Technology Corporation.

Microdrive is a trademark of International Business Machine Corporation.

CompactFlash is a registered trademark of SanDisk Corporation.

Memory Stick is a registered trademark of Sony Corporation.

SanDisk is a licensee of the SD and miniSD trademarks.

MultiMediaCard is a trademark of Infineon Technologies and licensed to the MultiMediaCard Association.

xD-Picture Card is a trademark of Fujifilm Co. Ltd., Toshiba Corporation and Olympus Optical Co. Ltd.

PictBridge is a trademark.

Memory Stick Pro, Memory Stick Pro Duo, Memory Stick Duo and MagicGate are trademarks of Sony Corporation.

BROADCOM, SecureEasySetup and the SecureEasySetup logo are trademarks or registerd trademarks of Broadcom Corporation in the United States and/or other countries.

AOSS is a trademark of Buffalo Inc..

FaceFilter Studio is a trademark of Reallusion, Inc.

Each company whose software title is mentioned in this manual has a Software License Agreement specific to its proprietary programs.

All other brand and product names mentioned in this User's Guide, the Software User's Guide and the Network User’s Guide are registered trademarks of their respective companies.

B Troubleshooting and Routine Maintenance

Troubleshooting

If you think there is a problem with your machine, check the chart below and follow the troubleshooting tips.

Most problems can be easily resolved by yourself. If you need additional help, the Brother Solutions Center offers the latest FAQs and troubleshooting tips. Visit us at http://solutions.brother.com.

If you are having difficulty with your machine

Printing

Difficulty	Suggestions
No printout	Check the interface cable or wireless connection on both the machine and your computer. (See the *Quick Setup Guide*.)
	Make sure the machine is plugged in and not in Power Save mode.
	One or more ink cartridges are empty. (See *Replacing the ink cartridges* on page 134.)
	Check to see if the LCD is showing an error message. (See *Error messages* on page 125.)
	Check that the correct printer driver has been installed and chosen.
	Make sure that the machine is online. Click **Start** and then **Printers and Faxes**. Right-click and choose **Brother MFC-XXXX** (where XXXX is your model name), and make sure that **Use Printer Offline** is unchecked.
Poor print quality	Check the print quality. (See *Checking the print quality* on page 139.)
	Make sure that the Media Type setting in the printer driver or the Paper Type setting in the machine's menu matches the type of paper you are using. (See *Printing* for Windows® or *Printing and Faxing* for Macintosh® in the Software User's Guide on the CD-ROM and *Paper Type* on page 22.)
	Make sure that your ink cartridges are fresh. The following may cause ink to clog: ■ The expiration date written on the cartridge package has passed. (Cartridges stay usable for up to two years if kept in their original packaging.) ■ The ink cartridge was in your machine over six months. ■ The ink cartridge may not have been stored properly before use.
	Try using the recommended types of paper. (See *Acceptable paper and other media* on page 11.)
	The recommended environment for your machine is between 20° C to 33° C.
White horizontal lines appear in text or graphics.	Clean the print head. (See *Cleaning the print head* on page 139.)
	Try using the recommended types of paper. (See *Acceptable paper and other media* on page 11.)
	If you want to print on Photo L or 10 × 15 cm paper, make sure you use the photo paper tray. (See *Loading photo paper* on page 17.)
The machine prints blank pages.	Clean the print head. (See *Cleaning the print head* on page 139.)
Characters and lines are stacked.	Check the printing alignment. (See *Checking the print alignment* on page 140.)

Printing (continued)

Difficulty	Suggestions
Printed text or images are skewed.	Make sure the paper is loaded properly in the paper tray and the paper side guide is adjusted correctly. (See *Loading paper and other media* on page 14.)
	Make sure the Jam Clear Cover is set properly.
Smudged stain at the top centre of the printed page.	Make sure the paper is not too thick or curled. (See *Acceptable paper and other media* on page 11.)
Printing appears dirty or ink seems to run.	Make sure you are using the recommended types of paper. (See *Acceptable paper and other media* on page 11.) Don't handle the paper until the ink is dry.
	If you are using photo paper, make sure that you have set the correct paper type. If you are printing a photo from your PC, set the **Media Type** in the **Basic** tab of the printer driver.
Stains appear on the reverse side or at the bottom of the page.	Make sure the printer platen is not dirty with ink. (See *Cleaning the machine printer platen* on page 137.)
	Make sure you are using the paper support flap. (See *Loading paper and other media* on page 14.)
The machine prints dense lines on the page.	Check **Reverse Order** in the **Basic** tab of the printer driver.
The printouts are wrinkled.	In the printer driver **Basic** tab, click **Settings**, and uncheck **Bi-Directional Printing**.
Cannot perform ‘2 in 1’ or ‘4 in 1’ printing.	Check that the paper size setting in the application and in the printer driver are the same.
Print speed is too slow.	Try changing the printer driver setting. The highest resolution needs longer data processing, sending and printing time. Try the other quality settings in the printer driver **Basic** tab. Also, click **Settings**, and make sure you uncheck **Colour Enhancement**.
	Turn the borderless feature off. Borderless printing is slower than normal printing. (See *Printing* for Windows® or *Printing and Faxing* for Macintosh® in the Software User’s Guide on the CD-ROM.)
Colour Enhancement is not working properly.	If the image data is not full colour in your application (such as 256 colour), Colour Enhancement will not work. Use at least 24 bit colour data with the Colour Enhancement feature.
Photo paper does not feed properly.	When you print on Brother photo paper, load the instruction sheet included with the photo paper in the paper tray first, and then put the photo paper on top of the instruction sheet.
	Clean the paper pick-up roller. (See *Cleaning the paper pick-up roller* on page 138.)
Machine feeds multiple pages.	Make sure the paper is loaded properly in the paper tray. (See *Loading paper and other media* on page 14.)
	Check that more than two types of paper are not loaded in the paper tray at any one time.
Printed pages are not stacked neatly.	Make sure you are using the paper support flap. (See *Loading paper and other media* on page 14.)
Printed pages refeed and cause a paper jam.	Make sure you pull out the paper support until it clicks and unfold the paper support flap.
Machine does not print from Paint Brush.	Try setting the Display setting to ‘256 colours’.
Machine does not print from Adobe Illustrator.	Try to reduce the print resolution. (See *Printing* for Windows® or *Printing and Faxing* for Macintosh® in the Software User’s Guide on the CD-ROM.)

Printing Received Faxes

Difficulty	Suggestions
Condensed print and white streaks across the page or the top and bottom of sentences are cut off.	You probably had a bad connection, with static or interference on the telephone line. Ask the other party to send the fax again.
Vertical black lines when receiving.	The sender's scanner may be dirty. Ask the sender to make a copy to see if the problem is with the sending machine. Try receiving from another fax machine.
Received colour fax prints only in black and white.	Replace the colour ink cartridges that are empty or nearly empty, and then ask the other person to send the colour fax again. (See *Replacing the ink cartridges* on page 134.) Check that Advanced Fax Operation is set to off. (See *Turning off Advanced Fax Operations* on page 68.)
Left and Right margins are cut off or a single page is printed on two pages.	Turn on Auto Reduction. (See *Printing a reduced incoming fax* on page 42.)

Telephone Line or Connections

Difficulty	Suggestions
Dialling does not work. (No dial tone)	Make sure the machine is plugged in and not in Power Save mode.
	Check all line cord connections.
	Change Tone/Pulse setting. (See the *Quick Setup Guide*.)
	Lift the external telephone's handset, (or the machine's handset if available), and then dial the number to send a manual fax. Wait to hear fax receiving tones before pressing **Mono Start** or **Colour Start**.
The machine does not answer when called.	Make sure the machine is in the correct receiving mode for your setup. (See *Choosing the Receive Mode* on page 38.) Check for a dial tone. If possible, call your machine to hear it answer. If there is still no answer, check the telephone line cord connection. If there is no ringing when you call your machine, ask your telephone company to check the line.

Receiving Faxes

Difficulty	Suggestions
Cannot receive a fax.	Check all line cord connections.
	Make sure the machine is in the correct receiving mode for your setup. (See *Receive mode settings* on page 40.)
	If you often have interference on the telephone line, try changing the menu setting of Compatibility to `Basic`. (See *Telephone line interference* on page 133.)

Sending Faxes

Difficulty	Suggestions
Cannot send a fax.	Check all line cord connections.
	Make sure that the Fax key is illuminated. (See *Entering Fax mode* on page 30.)
	Ask the other party to check that the receiving machine has paper.
	Print the Transmission Verification Report and check for an error. (See *Reports* on page 73.)
Transmission Verification Report says 'Result:ERROR'.	There is probably temporary noise or static on the line. Try sending the fax again. If you send a PC FAX message and get 'Result:ERROR' on the Transmission Verification Report, your machine may be out of memory. To gain extra memory, you can turn off Advanced Fax Operation (see *Turning off Advanced Fax Operations* on page 68), print fax messages in memory (see *Printing a fax from the memory* on page 43) or cancel a Delayed Fax or Polling Job (see *Cancelling a fax in progress* on page 31 or *Checking and cancelling waiting jobs* on page 35). If the problem continues, ask the telephone company to check your telephone line.
	If you often get transmission errors due to possible interference on the telephone line, try changing the menu setting of Compatibility to `Basic`. (See *Telephone line interference* on page 133.)
Poor fax send quality.	Try changing your resolution to `Fine` or `S.Fine`. Make a copy to check your machine's scanner operation. If the copy quality is not good, clean the scanner. (See *Cleaning the scanner* on page 137.)
Vertical black lines when sending.	Black vertical lines on faxes you send are typically caused by dirt or correction fluid on the glass strip. Clean the glass strip. (See *Cleaning the scanner* on page 137.)

Handling Incoming Calls

Difficulty	Suggestions
The machine 'Hears' a voice as a CNG Tone.	If Fax Detect is set to on, your machine is more sensitive to sounds. It may mistakenly interpret certain voices or music on the line as a fax machine calling and respond with fax receiving tones. Deactivate the machine by pressing **Stop/Exit**. Try avoiding this problem by turning Fax Detect to off. (See *Fax Detect* on page 41.)
Sending a fax call to the machine.	If you answered on an external or extension telephone, press your Remote Activation Code (the factory setting is ∗ **5 1**). When your machine answers, hang up.
Custom features on a single line.	If you have Call Waiting, Call Waiting/Caller ID, an alarm system or other custom feature on a single telephone line with your machine, it may create a problem sending or receiving faxes. **For example:** If you subscribe to Call Waiting or some other custom service and its signal comes through the line while your machine is sending or receiving a fax, the signal can temporarily interrupt or disrupt the faxes. Brother's ECM feature should help overcome this problem. This condition is related to the telephone system industry and is common to all devices that send and receive information on a single, shared line with custom features. If avoiding a slight interruption is crucial to your business, a separate telephone line with no custom features is recommended.

Copying Difficulties

Difficulty	Suggestions
Cannot make a copy.	Make sure that the Copy key is illuminated. (See *Entering Copy mode* on page 78.)
Vertical streaks appear in copies.	If you see vertical streaks on copies, clean the scanner. (See *Cleaning the scanner* on page 137.)
Poor copy results when using the ADF.	Try using the scanner glass. (See *Using the scanner glass* on page 10.)
Vertical black line appear in copies.	Black vertical lines on copies are typically caused by dirt or correction fluid on the glass strip. Clean the glass strip. (See *Cleaning the scanner* on page 137.)

Scanning Difficulties

Difficulty	Suggestions
TWAIN/WIA errors appear when starting to scan.	Make sure the Brother TWAIN/WIA driver is chosen as the primary source. In Presto!® PageManager® with OCR, click **File**, **Select Source** to choose the Brother TWAIN/WIA driver.
Poor scanning results when using the ADF.	Try using the scanner glass. (See *Using the scanner glass* on page 10.)

Software Difficulties

Difficulty	Suggestions
‘Device Busy’	Make sure the machine is not showing an error message on the LCD.
Cannot print images from FaceFilter Studio.	To use FaceFilter Studio, you must install the FaceFilter Studio application from the CD-ROM supplied with your machine. To install FaceFilter Studio see the *Quick Setup Guide*. Also, before you start FaceFilter Studio for the first time, you must make sure your Brother machine is turned On, and connected to your computer. This will allow you to access all the functions of FaceFilter Studio.

PhotoCapture Center™ Difficulties

Difficulty	Suggestions
Removable Disk does not work properly.	1 Have you installed the Windows® 2000 update? If not, do the following: 1) Unplug the USB cable. 2) Install the Windows® 2000 update using one of the following methods. ■ Install MFL-Pro Suite from the CD-ROM. (See the *Quick Setup Guide*.) ■ Download the latest service pack from the Microsoft Web site. 3) Wait about 1 minute after you restart the PC, and then connect the USB cable. 2 Take out the memory card and put it back in again. 3 If you have tried 'Eject' from within Windows®, take out the memory card before you continue. 4 If an error message appears when you try to eject the memory card, it means the card is being accessed. Wait a while and then try again. 5 If all of the above do not work, turn off your PC and machine, and then turn them on again. (You will have to unplug the power cord of the machine to turn it off.)
Cannot access Removable Disk from Desktop icon.	Make sure that you have correctly inserted the memory card or USB Flash memory drive.

Network Difficulties

Difficulty	Suggestions
Cannot print over the Network.	Make sure that your machine is powered on and is online and in Ready mode. Print a Network Configuration list (see *Reports* on page 73.) and check the current Network settings printed in this list. Reconnect the LAN cable to the hub to verify that the cabling and network connections are good. If possible, try connecting the machine to a different port on your hub using a different cable. If the connections are good, the machine shows `LAN Active` for 2 seconds. (If you are using a wireless connection or are having Network problems, see the Network User's Guide for more information.)
The network scanning feature does not work.	(For Windows® users only) Firewall settings on your PC may be rejecting the necessary network connection. Follow the instructions below to configure the Firewall. If you are using personal Firewall software, see the User's Guide for your software or contact the software manufacturer. For Windows® XP SP2 and Windows Vista™ users, see *Firewall settings* in the Software User's Guide on the CD-ROM. For Windows® XP SP1 user's, please visit the Brother Solutions Center.
The network PC-Fax Receive feature does not work.	
Your computer cannot find your machine.	<Windows® users> Firewall settings on you PC may be rejecting the necessary network connection. For detail, see the instruction above. <Macintosh® users> Re-select your machine in the DeviceSelector application located in Macintosh HD/Library/Printers/Brother/Utilities or from the model list in ControlCenter2.

Error messages

As with any sophisticated office product, errors may occur. If this happens, your machine identifies the error and shows an error message. The most common error messages are shown below.

You can correct most errors by yourself. If you need more help, the Brother Solutions Center offers the latest FAQs and troubleshooting tips.

Visit us at http://solutions.brother.com.

Error Message	Cause	Action
Comm.Error	Poor telephone line quality caused a communication error.	If the problem continues, call the telephone company and ask them to check your telephone line.
Connection Fail	You tried to poll a fax machine that is not in Polled Waiting mode.	Check the other fax machine's polling setup.
Cover is Open.	The scanner cover is not closed completely.	Lift the scanner cover and then close it again.
	The ink cartridge cover is not completely closed.	Firmly close the ink cartridge cover until it clicks.
Data Remaining	Print data is left in the machine's memory.	Press **Stop/Exit**. The machine will cancel the job and clear it from the memory. Try to print again.
Disconnected	The other person or other person's fax machine stopped the call.	Try to send or receive again.
Document Jam	The document was not inserted or fed properly, or the document scanned from the ADF was too long.	See *Using the ADF* on page 9. See *Document jam* on page 130.
High Temperature	The print head is too warm.	Allow the machine to cool down.
Hub is Unusable.	A Hub or USB Flash memory drive with Hub has been connected to the USB direct interface.	A Hub or USB Flash memory drive with Hub are not supported. Unplug the device from the USB direct interface.
Image Too Long.	The proportions of your photo are irregular so effects could not be added.	Choose a regularly proportioned image.
Image Too Small.	The size of your photo is too small to trim.	Choose a larger image.

Error Message	Cause	Action
Ink Empty	One or more of the ink cartridges is empty. The machine will stop all print operations. While memory is available, black and white faxes will be stored in the memory. If a sending machine has a colour fax, the machine's 'handshake' will ask that the fax be sent as black and white. If the sending machine has the ability to convert it, the colour fax will be stored in the memory as a black and white fax.	Replace the empty ink cartridges. (See *Replacing the ink cartridges* on page 134.)
Low Temperature	The print head is too cold.	Allow the machine to warm up.
Media Error	The memory card is either corrupted, improperly formatted, or there is a problem with the memory card.	Put the card firmly into the slot again to make sure it is in the correct position. If the error remains, check the media drive (slot) of the machine by putting in another memory card that you know is working.
Media is Full.	The memory card or USB flash memory drive you are using already contains 999 files.	Your machine can only save to your memory card or USB flash memory drive if it contains less than 999 files. Try deleting unused files to free some space and try again.
Near Empty	One or more of the ink cartridges are running out of ink. If a sending machine has a colour fax, the machine's 'handshake' will ask that the fax be sent as black and white. If the sending machine has the ability to convert it, the colour fax will be received into memory as a black and white fax.	Order a new ink cartridge.
No Caller ID	There is no incoming call history. You did not receive calls or you have not subscribed to the Caller ID service from your telephone company.	If you want to use the Caller ID feature call your telephone company.
No Cartridge	An ink cartridge is not installed properly.	Reinstall the ink cartridge. (See *Replacing the ink cartridges* on page 134.)
No File	The memory card or USB Flash memory drive in the media drive does not contain a .JPG file.	Put the correct memory card or USB Flash memory drive into the slot again.
No Paper Fed	The machine is out of paper or paper is not properly loaded in the paper tray.	Do one of the following: ■ Refill the paper in the paper tray, and then press **Mono Start** or **Colour Start**. ■ Remove the paper and load it again and then press **Mono Start** or **Colour Start**.
	The paper is jammed in the machine.	See *Printer jam or paper jam* on page 131.

Error Message	Cause	Action
No Response/Busy	The number you dialled does not answer or is busy.	Verify the number and try again.
Not Registered	You tried to access a Speed Dial number that is not programmed.	Set up the Speed Dial number. (See *Storing Speed Dial numbers* on page 54.)
Out of Memory	The machine's memory is full.	**Fax sending or copy operation in progress** Do one of the following: ■ Press **Stop/Exit** and wait until the other operations in progress finish and then try again. ■ Clear the data in the memory. To gain extra memory, you can turn off Advanced Fax Operation. (See *Turning off Advanced Fax Operations* on page 68.) ■ Print the faxes that are in the memory. (See *Printing a fax from the memory* on page 43.)
	The memory card or USB flash memory drive you are using does not have enough free space to scan the document.	Delete unused files from your memory card or USB Flash memory drive to make some free space and then try again.
Paper Jam	Paper is jammed in the machine.	Open the Jam Clear Cover (at the back of the machine) and remove the jammed paper. (See *Printer jam or paper jam* on page 131.)
Unable to Clean XX	The machine has a mechanical problem. **—OR—** A foreign object such as a clip or ripped paper is in the machine.	Open the scanner cover and remove any foreign objects inside the machine. If the error message continues, do one of the following: ■ Disconnect the machine from the power for several minutes, then reconnect it. (The machine can be turned off for approximately 24 hours without losing faxes stored in the memory. See *Transferring your faxes or Fax Journal report* on page 129.)
Unable to Init. XX	The machine has a mechanical problem. **—OR—** A foreign object such as a clip or ripped paper is in the machine.	Open the scanner cover and remove any foreign objects inside the machine. If the error message continues, do one of the following: ■ Disconnect the machine from the power for several minutes, then reconnect it. (The machine can be turned off for approximately 24 hours without losing faxes stored in the memory. See *Transferring your faxes or Fax Journal report* on page 129.)

Error Message	Cause	Action
Unable to Print XX	The machine has a mechanical problem. **—OR—** A foreign object such as a clip or ripped paper is in the machine.	Open the scanner cover and remove any foreign objects inside the machine. If the error message continues, do one of the following: ■ Disconnect the machine from the power for several minutes, then reconnect it. (The machine can be turned off for approximately 24 hours without losing faxes stored in the memory. See *Transferring your faxes or Fax Journal report* on page 129.)
Unable to Scan XX	The machine has a mechanical problem. **—OR—** A foreign object such as a clip or ripped paper is in the machine.	Open the scanner cover and remove any foreign objects inside the machine. If the error message continues, do one of the following: ■ Disconnect the machine from the power for several minutes, then reconnect it. (The machine can be turned off for approximately 24 hours without losing faxes stored in the memory. See *Transferring your faxes or Fax Journal report* on page 129.)
Unusable Device Disconnect device from front connector & turn machine off & then on	A broken device has been connected to the USB direct interface.	Unplug the device from the USB direct interface, then press **Power Save** to turn the machine off and then on again.
Unusable Device Please Disconnect USB Device.	A USB device or USB Flash memory drive that is not supported has been connected to the USB direct interface. For more information, visit us at http://solutions.brother.com.	Unplug the device from the USB direct interface.
Wrong Paper Size	Paper is not the correct size.	Do one of the following: ■ Load the correct size of paper (Letter, Legal or A4), and then press **Mono Start** or **Colour Start**. ■ Check that the Jam Clear cover at the back of the machine is correctly inserted.

Error animation

Error animation displays step-by-step instructions when paper gets jammed or ink cartridges are empty. You can read the steps at your own pace by pressing ▶ to see the next step and ◀ to go backward. If you do not press a key after 1 minute the animation starts running automatically again.

Note

You can press ◀, ▶ or **OK** to pause the auto-animation and go back to step-by-step mode.

Transferring your faxes or Fax Journal report

If the LCD shows:

- `Unable to Clean XX`
- `Unable to Init. XX`
- `Unable to Print XX`
- `Unable to Scan XX`

We recommend transferring your faxes to another fax machine or to your PC. (See *Transferring faxes to another fax machine* on page 129 or *Transferring faxes to your PC* on page 129.)

You can also transfer the Fax Journal report to see if there are any faxes you need to transfer. (See *Transferring Fax Journal report to another fax machine* on page 130.)

Note

If there is an error message on the machine's LCD, after the faxes have been transferred, disconnect the machine from the power source for several minutes, and then reconnect it.

Transferring faxes to another fax machine

If you have not set up your Station ID, you cannot enter fax transfer mode. (See Setting Your Station ID in the Quick Setup Guide.)

1. Press **Stop/Exit** to interrupt the error temporarily.
2. Press **Menu**.
3. Press ▲ or ▼ to choose `Service`. Press **OK**.
4. Press ▲ or ▼ to choose `Data Transfer`. Press **OK**.
5. Press ▲ or ▼ to choose `Fax Transfer`. Press **OK**.
6. Do one of the following:
   - If the LCD shows `No Data`, there are no faxes left in the machine's memory.

     Press **Stop/Exit**.
   - Enter the fax number to which faxes will be forwarded.
7. Press **Mono Start**.

Transferring faxes to your PC

You can transfer the faxes from your machine's memory to your PC.

1. Press **Stop/Exit** to interrupt the error temporarily.
2. Make sure you have installed **MFL-Pro Suite** on your PC, and then turn on **PC FAX Receiving** on the PC. (For details see *PC- FAX receiving* for Windows® in the Software User's Guide on the CD-ROM.)

B

3 Make sure you have set PC Fax Receive on the machine. (See *PC Fax Receive* on page 66.)
If faxes are in the machine's memory when you set up PC Fax Receive, the LCD will ask if you want to transfer the faxes to your PC.

4 Do one of the following:

- To transfer all faxes to your PC, press **1**. You will be asked if you want a backup print.
- To exit and leave the faxes in the memory, press **2**.

5 Press **Stop/Exit**.

Transferring Fax Journal report to another fax machine

If you have not set up your Station ID, you cannot enter fax transfer mode. (See Setting Your Station ID in the Quick Setup Guide.)

1 Press **Stop/Exit** to interrupt the error temporarily.

2 Press **Menu**.

3 Press ▲ or ▼ to choose `Service`.
Press **OK**.

4 Press ▲ or ▼ to choose `Data Transfer`.
Press **OK**.

5 Press ▲ or ▼ to choose `Report Trans.`.
Press **OK**.

6 Enter the fax number to which Fax Journal report will be forwarded.

7 Press **Mono Start**.

Document jam

Documents can jam in the ADF unit if they are not inserted or fed properly, or if they are too long. Follow the steps below to clear a document jam.

Document is jammed in the top of the ADF unit

1 Take out any paper from the ADF that is not jammed.

2 Open the ADF cover.

3 Pull the jammed document up and to the left.

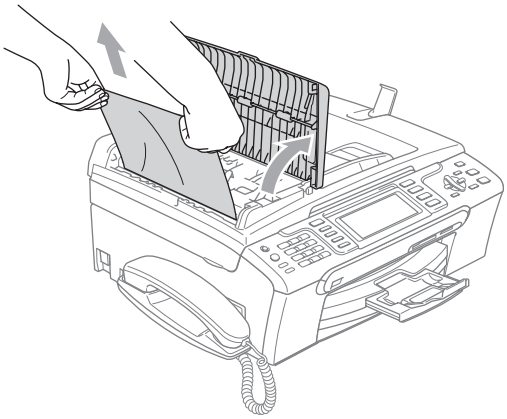

4 Close the ADF cover.

5 Press **Stop/Exit**.

Note

To avoid document jams close the ADF cover properly by pressing it down in the middle.

Document is jammed inside the ADF unit

1. Take out any paper from the ADF that is not jammed.
2. Lift the document cover.
3. Pull the jammed document out to the left.

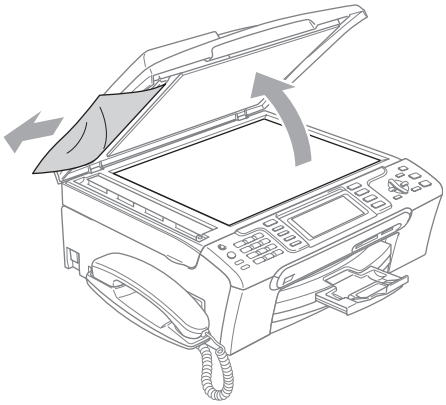

4. Close the document cover.
5. Press **Stop/Exit**.

Printer jam or paper jam

Take out the jammed paper depending on where it is jammed in the machine. Open and close the scanner cover to clear the error.

1. Pull the paper tray (1) out of the machine.

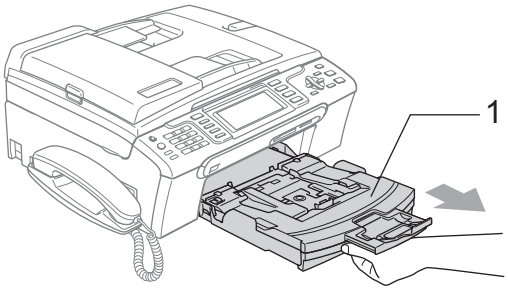

2. Pull out the jammed paper (1) and press **Stop/Exit**.

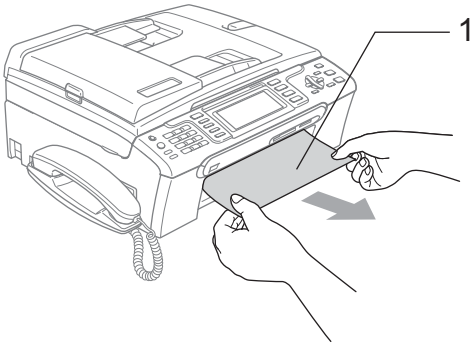

- If you cannot remove the jammed paper from the front side, or the error message still appears on the LCD after you remove the jammed paper, please go to the next step.

B

3 Remove the Jam Clear Cover (1) from the back of the machine. Pull the jammed paper out of the machine.

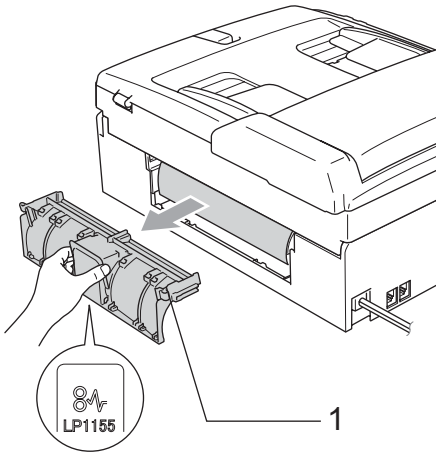

CAUTION

DO NOT place the jam clear cover face down as shown in the illustration. Doing this may damage the cover and cause paper jams.

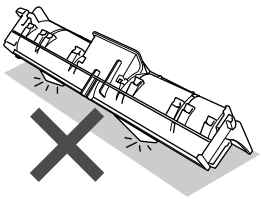

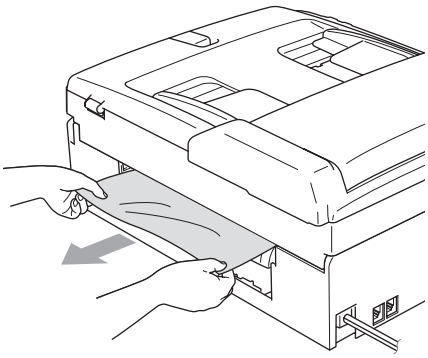

4 Put the Jam Clear Cover back on. Make sure the cover is set properly.

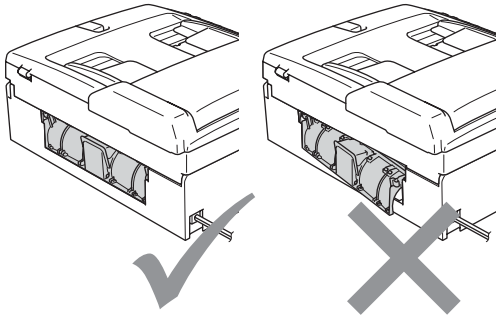

5 Using both hands, use the plastic tabs on both sides of the machine to lift the scanner cover (1) until it locks securely into the open position.
Make sure that there is no jammed paper left in the corners of the machine.

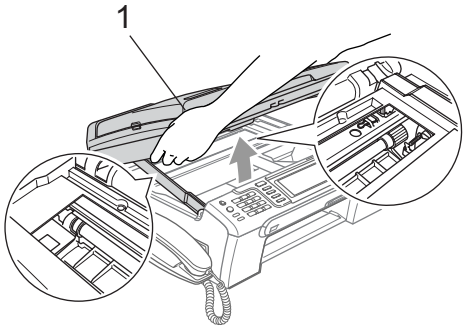

Note

If the paper is jammed under the print head, unplug the machine from the power source, and then move the print head to take out the paper.

6 Lift the scanner cover to release the lock (1). Gently push the scanner cover support down (2) and close the scanner cover (3).

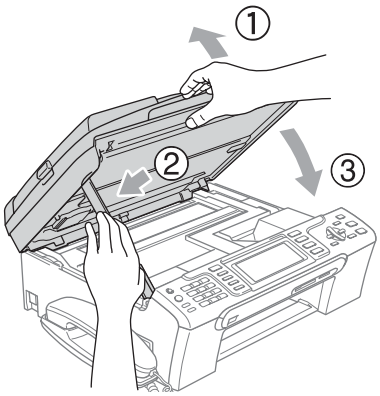

7 Push the paper tray firmly back into the machine.

Note

Make sure you pull out the paper support until it clicks.

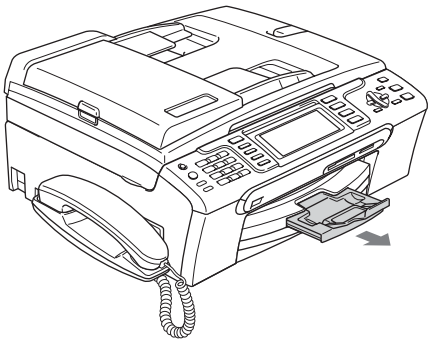

Dial Tone detection

When you send a fax automatically, by default your machine will wait for a fixed amount of time before it starts to dial the number. By changing the Dial Tone setting to `Detection` you can make your machine dial as soon as it detects a dial tone. This setting can save a small amount of time when sending a fax to many different numbers. If you change the setting and start having problems with dialling you should change back to the factory `No Detection` setting.

1 Press **Menu**.

2 Press ▲ or ▼ to choose `Initial Setup`.
Press **OK**.

3 Press ▲ or ▼ to choose `Dial Tone`.

4 Press ◀ or ▶ to choose `Detection` or `No Detection`.
Press **OK**.

5 Press **Stop/Exit**.

Telephone line interference

If you are having problems sending or receiving a fax due to possible interference on the telephone line, you can change the compatibility setting, which reduces the modem speed to minimise errors.

1 Press **Menu**.

2 Press ▲ or ▼ to choose `Fax`.
Press **OK**.

3 Press ▲ or ▼ to choose `Miscellaneous`.
Press **OK**.

4 Press ▲ or ▼ to choose `Compatibility`.

5 Press ◀ or ▶ to choose `Normal` (or `Basic`).

- `Basic` cuts the modem speed to 9600 bps. Unless interference is a recurring problem on your telephone line, you may prefer to use it only when needed.
- `Normal` sets the modem speed at 14400 bps. (factory setting)

Press **OK**.

6 Press **Stop/Exit**.

Note

When you change the compatibility to `Basic`, the ECM feature is only available for colour fax sending.

Routine maintenance

Replacing the ink cartridges

Your machine is equipped with an ink dot counter. The ink dot counter automatically monitors the level of ink in each of the 4 cartridges. When the machine detects an ink cartridge is running out of ink, the machine will tell you with a message on the LCD.

Note

For example, when one of the ink cartridge is nearly empty, the LCD will disply `Near Empty` (name of colour).

You should purchase a replacement cartridge in preparation for when the machine indicates the colour is completely empty.

When one of the ink cartridge is empty, the LCD will display `Ink Empty` (name of colour).

You should only replace the actual ink cartridge when this message `Ink Empty` appears on the LCD.

The LCD will tell you which ink cartridge is low or needs replacing. Be sure to follow the LCD prompts to replace the ink cartridges in the correct order.

Even though the machine tells you that an ink cartridge is empty, there will be a small amount of ink left in the ink cartridge. It is necessary to keep some ink in the ink cartridge to prevent air from drying out and damaging the print head assembly.

1. Open the ink cartridge cover.
   If one or more ink cartridges are empty, for example Black, the LCD shows `Ink Empty` and BK `Black`.

2. Pull the lock release lever down and take out the ink cartridge for the colour shown on the LCD.

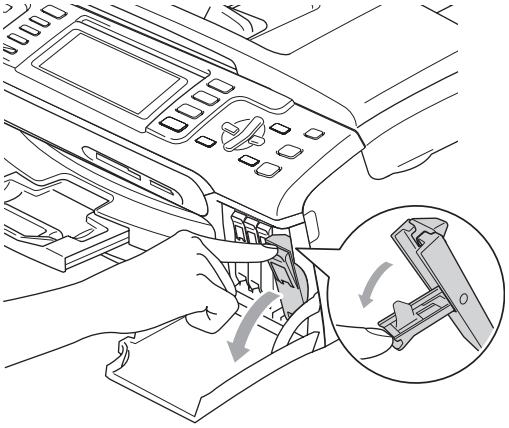

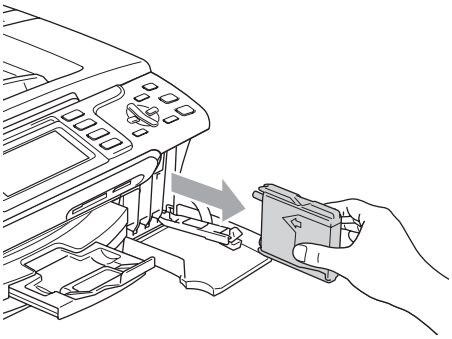

3. Open the new ink cartridge bag for the colour shown on the LCD, and then take out the ink cartridge.

4 Remove the protective yellow cap (1).

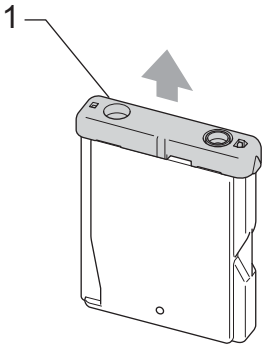

Improper Setup

DO NOT touch the area shown in the illustration below.

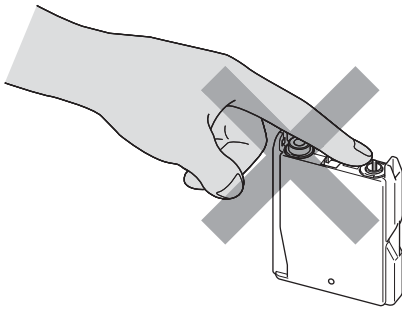

Note

If the protective yellow caps come off when you open the bag, the cartridge will not be damaged.

5 Each colour has its own correct position. Insert the ink cartridge in the direction of the arrow on the label.

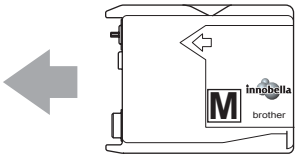

6 Lift the lock release lever and push it until it clicks, and then close the ink cartridge cover.

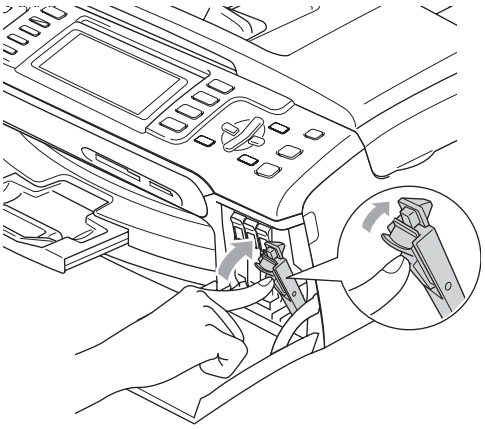

7 The machine will automatically reset the ink dot counter.

Note

- If you replaced an ink cartridge, the LCD will ask you to verify that it was a brand new one. (For example, `Did You Change` BK `Black`) For each new cartridge you installed, press **1** (`Yes`) to automatically reset the ink dot counter for that colour. If the ink cartridge you installed is not a brand new one, be sure to press **2** (`No`).
- If the LCD shows `No Cartridge` after you install the ink cartridges, check that the ink cartridges are installed properly.

WARNING

If ink gets in your eyes, wash them out with water at once and call a doctor if you are concerned.

B

CAUTION

DO NOT take out ink cartridges if you do not need to replace them. If you do so, it may reduce the ink quantity and the machine will not know the quantity of ink left in the cartridge.

DO NOT touch the cartridge insertion slots. If you do so, the ink may stain your skin.

If ink stains your skin or clothing, wash with soap or detergent at once.

If you mix the colours by installing an ink cartridge in the wrong position, clean the print head several times after correcting the cartridge installation.

Once you open an ink cartridge, install it in the machine and use it up within six months of installation. Use unopened ink cartridges by the expiration date written on the cartridge package.

DO NOT dismantle or tamper with the ink cartridge, this can cause the ink to leak out of the cartridge.

Brother multifunction machines are designed to work with ink of a particular specification and will work to a level of optimum performance when used with genuine Brother Branded ink cartridges. Brother cannot guarantee this optimum performance if ink or ink cartridges of other specifications are used. Brother does not therefore recommend the use of cartridges other than genuine Brother Branded cartridges or the refilling of empty cartridges with ink from other sources. If damage is caused to the print head or other parts of this machine as a result of using incompatible products with this machine, any repairs required as a result may not be covered by the warranty.

Cleaning the outside of the machine

CAUTION

Use neutral detergents. Cleaning with volatile liquids such as thinner or benzine will damage the outside surface of the machine.

DO NOT use cleaning materials that contain ammonia.

DO NOT use isopropyl alcohol to remove dirt from the control panel. It may crack the panel.

Clean the outside of the machine as follows:

1. Pull the paper tray (1) completely out of the machine.

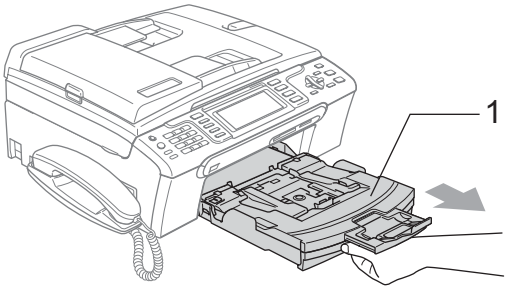

2. Wipe the outside of the machine with a soft cloth to remove dust.

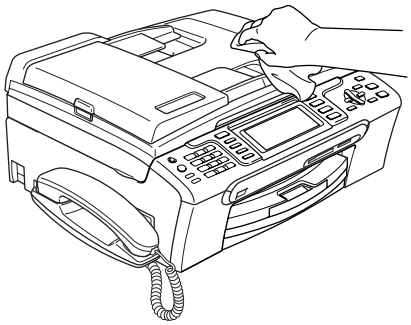

3 Remove anything that is stuck inside the paper tray.

4 Wipe the paper tray with a soft cloth to remove dust.

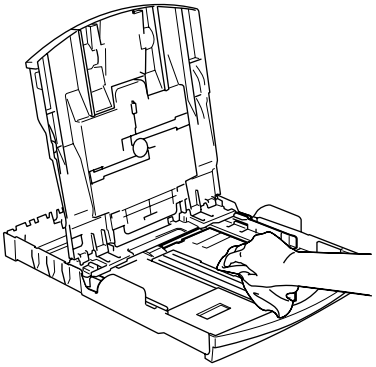

5 Put the paper tray firmly back in the machine.

Cleaning the scanner

1 Lift the document cover (1). Clean the scanner glass (2) and the white plastic (3) with a soft lint-free cloth moistened with a non-flammable glass cleaner.

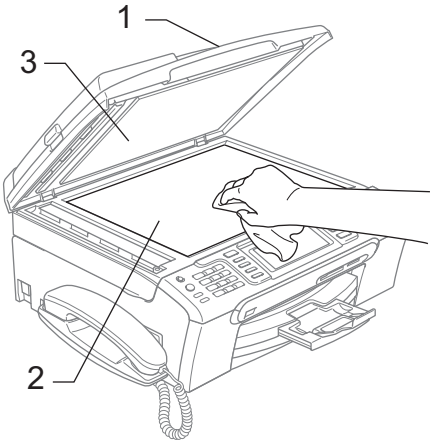

2 In the ADF unit, clean the white bar (1) and the glass strip (2) with a lint-free cloth moistened with a non-flammable glass cleaner.

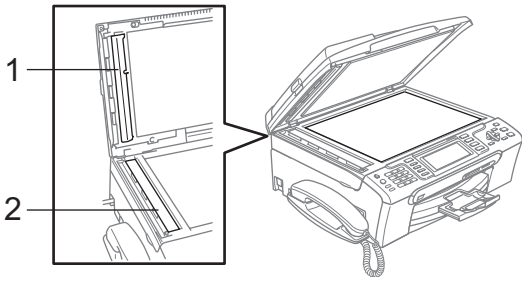

Note

In addition to cleaning the glass strip with a non-flammable glass cleaner, run your finger tip over the glass strip to see if you can feel anything on it. If you feel dirt or debris, clean the glass strip again concentrating on that area. You may need to repeat the cleaning process three or four times. To test, make a copy after each cleaning.

Cleaning the machine printer platen

WARNING

Be sure to unplug the machine from the electrical socket before cleaning the printer platen (1).

If ink is scattered on or around the printer platen wipe it off with a soft, *dry*, lint-free cloth.

1 Using both hands, use the plastic tabs on both sides of the machine to lift the scanner cover until it locks securely into the open position.

2 Clean the machine printer platen (1).

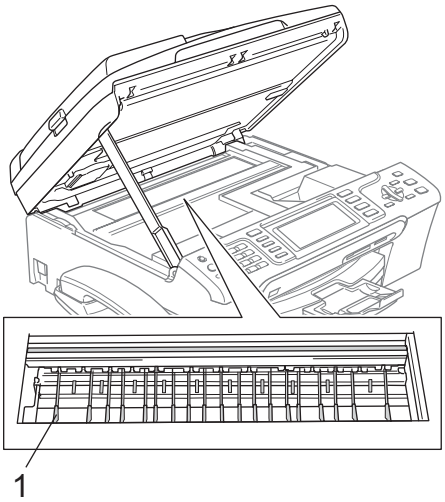

Cleaning the paper pick-up roller

1 Pull the paper tray completely out of the machine.

2 Unplug the machine from the electrical socket and remove the Jam Clear Cover (1).

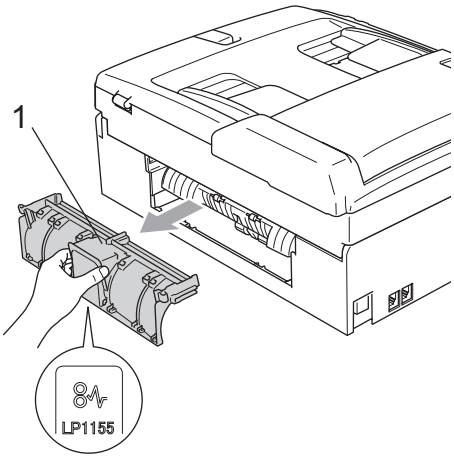

CAUTION

DO NOT place the jam clear cover face down as shown in the illustration. Doing this may damage the cover and cause paper jams.

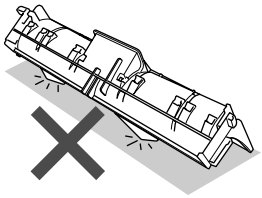

3 Clean the Paper Pick-up Roller (1) with isopropyl alcohol on a cotton swab.

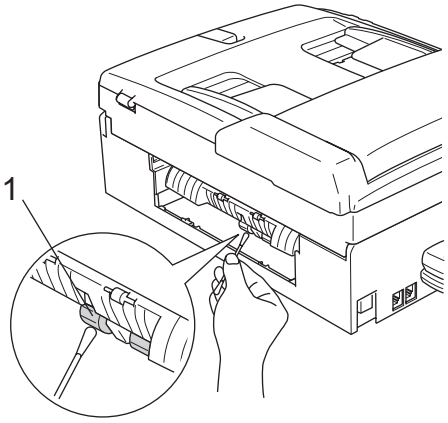

4 Put the Jam Clear Cover back on. Make sure the cover is set properly.

5 Put the paper tray firmly back in the machine.

6 Re-connect the power cord.

Cleaning the print head

To maintain print quality, the machine will automatically clean the print head. You can start the cleaning process manually if there is a print quality problem.

Clean the print head and ink cartridges if you get a horizontal line in the text or graphics on your printed pages. You can clean Black only, three colours at a time (Cyan/Yellow/Magenta), or all four colours at once.

Cleaning the print head consumes ink. Cleaning too often uses ink unnecessarily.

CAUTION

DO NOT touch the print head. Touching the print head may cause permanent damage and may void the print head's warranty.

1. Press **Ink Management**.
2. Press ▲ or ▼ to choose `Cleaning`.
   Press **OK**.
3. Press ▲ or ▼ to choose `Black`, `Color` or `All`.
   Press **OK**.
   The machine cleans the print head. When cleaning is finished, the machine will go back to standby mode automatically.

Note

If you clean the print head at least five times and the print has not improved, call your Brother dealer.

Checking the print quality

If faded or streaked colours and text appear on your output, some of the nozzles may be clogged. You can check this by printing the Print Quality Check Sheet and looking at the nozzle check pattern.

1. Press **Ink Management**.
2. Press ▲ or ▼ to choose `Test Print`.
   Press **OK**.
3. Press ▲ or ▼ to choose `Print Quality`.
   Press **OK**.
4. Press **Colour Start**.
   The machine begins printing the Print Quality Check Sheet.
5. Check the quality of the four colour blocks on the sheet.
6. The LCD asks you if the print quality is OK.
   Do one of the following:
   - If all lines are clear and visible, press **1** (`Yes`) to finish the Print Quality check and go to step ⑩.
   - If you can see missing short lines as shown below, press **2** to choose `No`.

OK

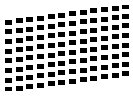

Poor

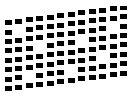

7. The LCD asks you if the print quality is OK for black and three colours.
   Press **1** (`Yes`) or **2** (`No`).
8. The LCD asks you if you want to start cleaning.
   Press **1** (`Yes`).
   The machine starts cleaning the print head.

9 After cleaning is finished, press **Colour Start**.
The machine starts printing the Print Quality Check Sheet again and then return to step ❺.

10 Press **Stop/Exit**.
If you repeat this procedure at least five times and the print quality is still poor, replace the ink cartridge for the clogged colour.
After replacing the ink cartridge, check the print quality. If the problem still exists, repeat the cleaning and test print procedures at least five times for the new ink cartridge. If ink is still missing, call your Brother dealer.

CAUTION

DO NOT touch the print head. Touching the print head may cause permanent damage and may void the print head's warranty.

Note

When a print head nozzle is clogged the printed sample looks like this.

→

After the print head nozzle is cleaned, the horizontal lines are gone.

Checking the print alignment

You may need to adjust the print alignment after transporting the machine if your printed text becomes blurred or images become faded.

1 Press **Ink Management**.

2 Press ▲ or ▼ to choose `Test Print`.
Press **OK**.

3 Press ▲ or ▼ to choose `Alignment`.
Press **OK**.

4 Press **Mono Start** or **Colour Start**.
The machine starts printing the Alignment Check Sheet.

5 Check the 600 dpi and 1200 dpi test prints to see if number 5 most closely matches number 0.

6 Do one of the following:

- If the number 5 samples of both the 600 dpi and 1200 dpi test prints are the best matches, press **1** (`Yes`) to finish the Alignment Check and go to step ❽.
- If another test print number is a better match for either 600 dpi or 1200 dpi, press **2** (`No`) to choose it.

7 For 600 dpi, press the number of the test print that most closely matches the number 0 sample (1-8).

8 For 1200 dpi, press the number of the test print that most closely matches the number 0 sample (1-8).

9 Press **Stop/Exit**.

Checking the ink volume

Although an ink volume icon appears on the LCD, you can use the **Ink Management** key to see a large graph showing the ink that is left in each cartridge.

1. Press **Ink Management**.
2. Press ▲ or ▼ to choose `Ink Volume`.
   Press **OK**.
   The LCD shows the ink volume.
3. Press **Stop/Exit**.

Note

You can check the ink volume from your computer. (See *Printing* for Windows® or *Printing and Faxing* for Macintosh® in the Software User's Guide on the CD-ROM.)

Uninstalling and installing the handset and handset cradle

If you do not use the handset you can remove the handset and handset cradle.

Uninstalling the handset and handset cradle

1. Unplug the curled handset cord from the machine.

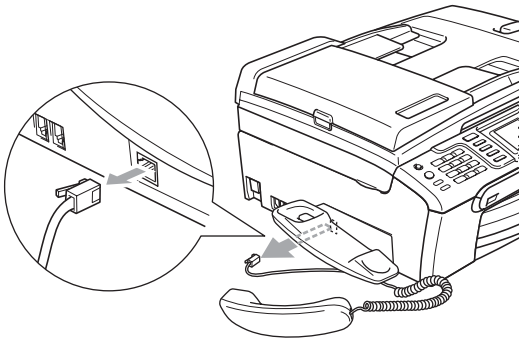

2. Pull the tab (1) back and hold it in position as you push the cradle (2) to the back of the machine.

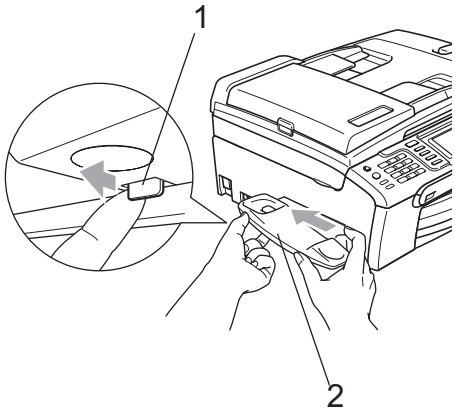

3. Attach the side cover.

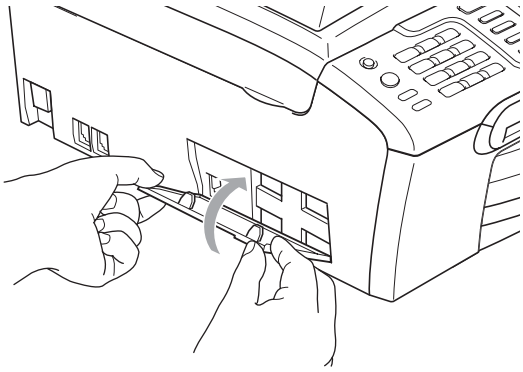

Installing the handset and handset cradle

1. Remove the side cover.

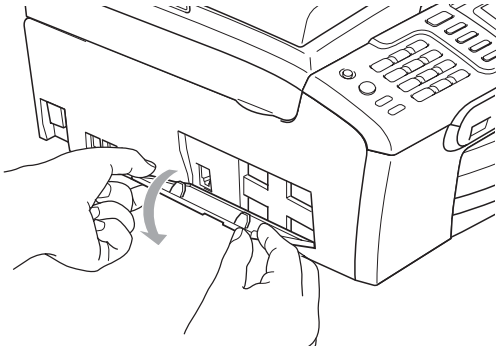

B

Note

If you cannot open the cover with your hand, use a coin to open it.

2 Align the recessed arrows on the cradle with those on the machine, and then slide the cradle toward the front of the machine until it clicks into place.

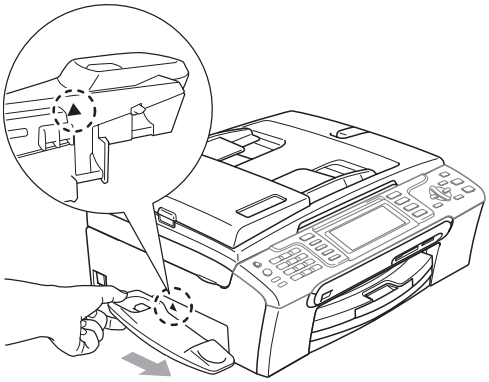

3 Connect the curled handset cord to the machine.

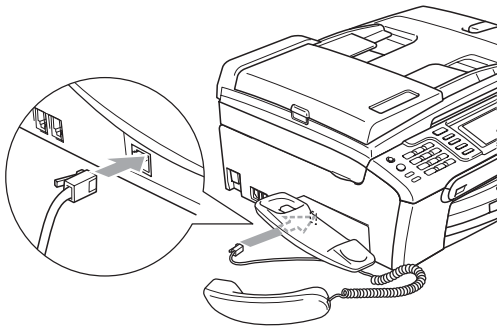

Machine Information

Checking the serial number

You can see the machine's serial number on the LCD.

1 Press **Menu**.

2 Press ▲ or ▼ to choose `Machine Info.`.
Press **OK**.

3 Press ▲ or ▼ to choose `Serial No.`.
Press **OK**.

4 Press **Stop/Exit**.

Packing and shipping the machine

When you transport the machine, use the packing materials that came with your machine. If you do not pack the machine properly, you could void your warranty.

CAUTION

It is important to allow the machine to ‘park’ the print head after a print job. Listen carefully to the machine before unplugging it to make sure that all mechanical noise has stopped. Not allowing the machine to finish this parking process may lead to print problems and possible damage to the print head.

1. Open the ink cartridge cover.
2. Pull the lock release levers down and take out all the ink cartridges. (See *Replacing the ink cartridges* on page 134.)
3. Install the yellow protective part, lift each lock release lever and push it until it clicks and then close the ink cartridge cover.

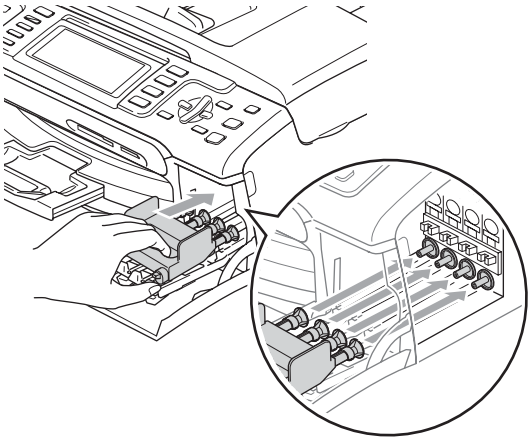

CAUTION

If you are not able to find the yellow protective part, DO NOT remove the ink cartridges before shipping. It is essential that the machine be shipped with either the yellow protective part or the ink cartridges in position. Shipping without them will cause damage to your machine and may void your warranty.

4. Unplug the machine from the telephone wall socket and take the telephone line cord out of the machine.
5. Unplug the machine from the electrical socket and from the machine.
6. Using both hands, use the plastic tabs on both sides of the machine to lift the scanner cover until it locks securely into the open position. Then unplug the interface cable from the machine, if it is connected.
7. Lift the scanner cover (1) to release the lock. Gently push the scanner cover support down (2) and close the scanner cover (3).

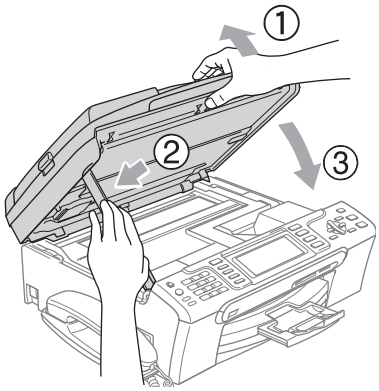

8. If your machine has a handset, remove it and the handset curled cord.

9 Wrap the machine in the bag and put it in the original carton with the original packing material.

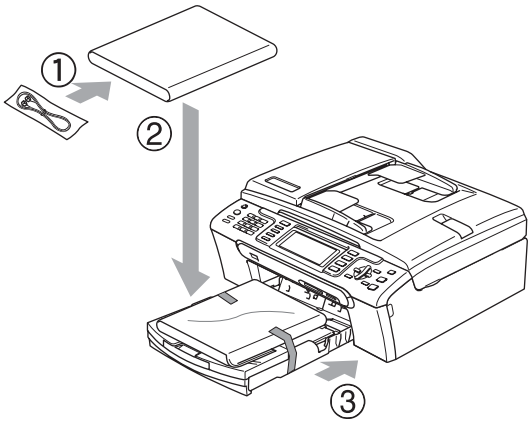

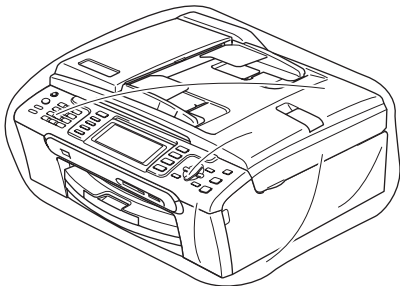

10 Pack the printed materials in the original carton as shown in the illustration. Do not pack the used ink cartridges in the carton.

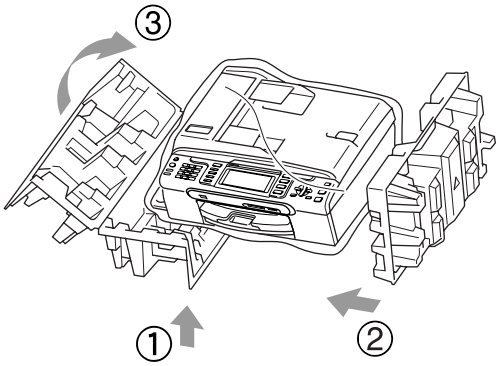

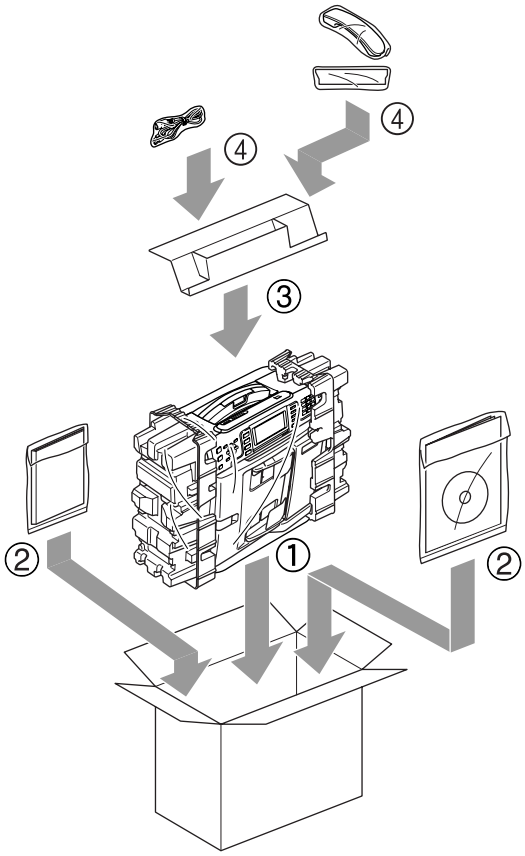

11 Close the carton and tape it shut.

C Menu and Features

On-screen programming

Your machine is designed to be easy to use with LCD on-screen programming using the menu keys. User-friendly programming helps you take full advantage of all the menu selections your machine has to offer.

Since your programming is done on the LCD, we have created step-by-step on-screen instructions to help you program your machine. All you need to do is follow the instructions as they guide you through the menu selections and programming options.

Menu table

You can program your machine by using the Menu table that begins on page 146. These pages list the menu selections and options.

Memory storage

Even if there is a power failure, you will not lose the settings you have chosen using the Menu key because they are stored permanently. Also, you will not lose your settings in the PhotoCapture, Fax and Copy mode key menus if you have chosen `Set New Default`. You may have to reset the date and time.

Note

During a power failure the machine will retain messages that are in the memory for approximately 24 hours.

Mode and menu keys

Menu	Access the main menu.
Fax Scan Copy Photo Capture	Access its menu of temporary settings.
▲ ▼	Scroll through the current menu level.
◄	Go back to the previous menu level.
►	Go to the next menu level.
OK	■ Go to the next menu level. ■ Accept an option.
Clear / Back	■ Cancel the current operation. ■ Go back to the previous menu level.
Stop / Exit	■ Stop the current operation.

Menu table

The menu table will help you understand the menu selections and options that are found in the machine's programs. The factory settings are shown in Bold with an asterisk.

Menu (Menu)

Level1	Level2	Level3	Options	Descriptions	Page
General Setup	Mode Timer	—	Off 0Sec 30Secs 1Min **2Mins*** 5Mins	Sets the time to return to Fax mode.	21
	Paper Type	—	**Plain Paper*** Inkjet Paper Brother Photo Other Photo Transparency	Sets the type of paper in the paper tray.	22
	Paper Size	—	Letter Legal **A4*** A5 10x15cm	Sets the size of the paper in the paper tray.	22
	Volume	Ring	Off Low **Med*** High	Adjusts the ring volume.	23
		Beeper	Off **Low*** Med High	Adjusts the volume level of the beeper.	23
		Speaker	Off Low **Med*** High	Adjusts the speaker volume.	23
	P.Save Setting	—	**Fax Receive:On*** Fax Receive:Off	Customizes the **Power Save** key not to receive faxes in power save mode.	20
	The factory settings are shown in Bold with an asterisk.				

Level1	Level2	Level3	Options	Descriptions	Page
General Setup (Continued)	**LCD Settings**	**LCD Contrast**	Light **Med*** Dark	Adjusts the contrast of the LCD.	24
		Backlight	**Light*** Dark	You can adjust the brightness of the LCD backlight.	24
		Dim Timer	Off 10Secs 20Secs **30Secs***	You can set how long the LCD backlight stays on for after the last key press.	24
		Off Timer	**Off*** 1Min 2Mins 3Mins 5Mins 10Mins 30Mins	You can set how long the LCD stays on for after the last key press.	25
		Wallpaper	—	You can choose the wallpaper of the LCD.	25
The factory settings are shown in Bold with an asterisk.					

C

Level1	Level2	Level3	Options	Descriptions	Page
Fax	**Setup Receive**	**Ring Delay**	**Ring Delay** 0-10 (**2***)	Sets the number of rings before the machine answers in Fax Only or Fax/Tel mode.	40
			Toll Saver On **Off***	Cost saving feature: the machine rings 2 times if there are messages and 4 times if there are no messages, so you can hang up and not pay for the call.	62
		F/T Ring Time	20Sec **30Sec*** 40Sec 70Sec	Sets the pseudo/double-ring time in Fax/Tel mode.	40
		Fax Detect	**On*** Semi Off	Receives fax messages without pressing the **Mono Start** or **Colour Start** key.	41
		Remote Codes	**On*** (*51, #51) Off	Allows you to answer all calls at an extension or external telephone and use codes to turn the machine on or off. You can personalize these codes.	51
		Auto Reduction	**On*** Off	Cuts the size of incoming faxes.	42
		Memory Receive	**On*** Off	Automatically stores any incoming faxes in its memory if it runs out of paper.	42
	Report Setting	**Transmission**	On On+Image **Off*** Off+Image	Initial setup for Transmission Verification Report and Fax Journal Report.	72
		Journal Period	Off **Every 50 Faxes*** Every 6 Hours Every 12 Hours Every 24 Hours Every 2 Days Every 7 Days		72
	The factory settings are shown in Bold with an asterisk.				

Level1	Level2	Level3	Options	Descriptions	Page
Fax (Continued)	**Advanced Fax Operation**	**Forward/Store**	**Off*** Fax Forward Fax Storage Fax Preview PC Fax Receive	Sets the machine to forward fax messages or to store incoming faxes in the memory (so you can retrieve them while you are away from your machine) to preview or send faxes to your PC.	63
		Remote Access	---*	Set your own code for Remote Retrieval.	69
		Print Document (Backup print)	—	Prints incoming faxes stored in the memory.	43
	Remaining Jobs	—	—	Check which jobs are in the memory and lets you cancel chosen jobs.	35
	Setup TAD	**OGM**	TAD Message F/T Message	Play/Record or erase the outgoing message.	59
		ICM Max.Time	**30Sec*** 60Sec 120Sec 180Sec	Choose the maximum length of incoming messages.	62
		ICM Rec.Monitr	**On*** Off	Allows you to turn the speaker volume for voice messages as they come in On or Off.	62
	Miscellaneous	**Mem Security**	—	Prohibits most functions except receiving faxes into memory.	27
		Compatibility	**Normal*** Basic	Adjusts the modem speed to help resolve transmission problems.	133
		Caller ID Type	**FSK*** DTMF	You can switch the mode if Caller ID cannot be displayed normally.	46
		Caller ID	Display# Print Report	View or print a list of the last 30 Caller IDs stored in memory.	47
		Fax Mode	**Easy Mode*** Advanced Mode	Selects the transmission process when sending/receiving the faxes manually.	26
LAN	See the table below				
	The factory settings are shown in Bold with an asterisk.				

C

LAN menu

Level1	Level2	Level3	Level4	Options	Descriptions
LAN	**Wired LAN**	**TCP/IP**	**BOOT Method**	**Auto*** Static RARP BOOTP DHCP	Chooses the BOOT method that best suits your needs.
			IP Address	[000-255]. [000-255]. [000-255]. [000-255]	Enter the IP address.
			Subnet Mask	[000-255]. [000-255]. [000-255]. [000-255]	Enter the Subnet mask.
			Gateway	[000-255]. [000-255]. [000-255]. [000-255]	Enter the Gateway address.
			Node Name	BRNXXXXXXXXXXXXXXXX	Enter the Node name.
			WINS Config	**Auto*** Static	Chooses the WINS configuration mode.
			WINS Server	(Primary) 000.000.000.000 (Secondary) 000.000.000.000	Specifies the IP address of the primary or secondary server.
			DNS Server	(Primary) 000.000.000.000 (Secondary) 000.000.000.000	Specifies the IP address of the primary or secondary server.
			APIPA	**On*** Off	Automatically allocates the IP address from the link-local address range.
		Ethernet	—	**Auto*** 100B-FD 100B-HD 10B-FD 10B-HD	Chooses the Ethernet link mode.
	See *Network User's Guide on the CD-ROM*.				
	The factory settings are shown in Bold with an asterisk.				

Level1	Level2	Level3	Level4	Options	Descriptions
LAN (Continued)	**WLAN**	**TCP/IP**	**BOOT Method**	**Auto*** Static RARP BOOTP DHCP	Chooses the BOOT method that best suits your needs.
			IP Address	[000-255]. [000-255]. [000-255]. [000-255]	Enter the IP address.
			Subnet Mask	[000-255]. [000-255]. [000-255]. [000-255]	Enter the Subnet mask.
			Gateway	[000-255]. [000-255]. [000-255]. [000-255]	Enter the Gateway address.
			Node Name	BRWXXXXXXXXXXXXXXXX	Enter the Node name.
			WINS Config	**Auto*** Static	Chooses the WINS configuration mode.
			WINS Server	(Primary) 000.000.000.000 (Secondary) 000.000.000.000	Specifies the IP address of the primary or secondary server.
			DNS Server	(Primary) 000.000.000.000 (Secondary) 000.000.000.000	Specifies the IP address of the primary or secondary server.
			APIPA	**On*** Off	Automatically allocates the IP address from the link-local address range.
		Setup Wizard		—	You can configure your print server.
		SecureEasySetup		—	You can configure the wireless network easily.
	See *Network User's Guide on the CD-ROM*.				
	The factory settings are shown in Bold with an asterisk.				

C

Level1	Level2	Level3	Level4	Options	Descriptions
LAN (Continued)	**WLAN** (Continued)	**AOSS**		—	You can configure the wireless network easily.
		WLAN Status	**Status**	—	You can see the current wireless network status.
			Signal	—	You can see the current wireless network signal strength.
			SSID	—	You can see the current SSID.
			Comm. Mode	—	You can see the current Communication Mode.
	Network I/F		—	**Wired LAN*** WLAN	You can choose the network connection type.
	Factory Reset		—	Yes No	Restores all wired and wireless network settings to the factory default.
	See *Network User's Guide on the CD-ROM*.				
	The factory settings are shown in Bold with an asterisk.				

Menu (Menu) (continued)

Level1	Level2	Level3	Options	Descriptions	Page
Print Reports	XMIT Verify	—	—	Prints these lists and reports.	73
	Help List	—	—		
	Quick Dial	Alphabetical Order Numerical Order	—		
	Fax Journal	—	—		
	User Settings	—	—		
	Network Config	—	—		
Machine Info.	Serial No.	—	—	Lets you check the serial number of your machine.	142
Initial Setup	Receive Mode	—	**Fax Only*** Fax/Tel Manual	Choose the receive mode that best suits your needs.	38
	Date&Time	—	—	Puts the date and time on the LCD and in headings of faxes you send.	See *Quick Setup Guide*
	Station ID	—	Station ID Fax: Station ID Name:	Set your name and fax number to appear on each page you fax.	
	Tone/Pulse	—	**Tone*** Pulse	Choose the dialling mode.	
	Dial Tone	—	Detection **No Detection***	Turns Dial Tone Detection on or off.	133
	Local Language	—	English **Chinese**	Allows you to change the LCD language.	25
	The factory settings are shown in Bold with an asterisk.				

C

Fax ( )

Level1	Level2	Level3	Options	Descriptions	Page
Fax Resolution	—	—	**Standard*** Fine S.Fine Photo	Sets the resolution for outgoing faxes.	34
Contrast	—	—	**Auto*** Light Dark	Changes the lightness or darkness of faxes you send.	33
Speed Dial	Search	—	Alphabetical Order Numerical Order	You can dial by pressing only a few keys (and Start).	52
	Set Speed Dial	—	—	Stores Speed Dial numbers, so you can dial by pressing only a few keys (and Start).	54
	Setup Groups	—	—	Sets up a Group number for Broadcasting.	57
Outgoing Call	Make a phone call Send a fax Add to Speed Dial Delete	—	—	You can choose a number from the Outgoing Call history and then make a telephone call to it, send a fax to it, add it to Speed Dial, or delete it.	53
Caller ID hist.	Make a phone call Send a fax Add to Speed Dial Delete	—	—	You can choose a number from the Caller ID history and then make a telephone call to it, send a fax to it, add it to Speed Dial, or delete it.	53
Broadcasting	Add Number Speed Dial Complete	—	—	You can send the same fax message to more than one fax number.	32
Delayed Fax	—	—	On **Off***	Sets the time of day in 24-hour format that the delayed faxes will be sent.	35
Batch TX	—	—	On **Off***	Combines delayed faxes to the same fax number at the same time of day into one transmission.	35
Real Time TX	—	—	On **Off***	You can send a fax without using the memory.	34
	The factory settings are shown in Bold with an asterisk.				

Level1	Level2	Level3	Options	Descriptions	Page
Polled TX	—	—	Standard Secure **Off***	Sets up the document on your machine to be retrieved by another fax machine.	76
Polling RX	—	—	Standard Secure Timer **Off***	Sets up your machine to poll another fax machine.	74
Overseas Mode	—	—	On **Off***	If you are having difficulty sending faxes overseas, set this to On.	35
Scan Size	—	—	**A4*** Letter	Adjust the scan area of the scanner glass to the size of the document.	31
Set New Default	—	—	Yes No	You can save your fax settings.	36
Factory Reset	—	—	Yes No	You can restore all settings to the factory settings.	36
The factory settings are shown in Bold with an asterisk.					

C

Scan ( )

Level1	Option1	Option2	Option3	Descriptions	Page
Scan to E-mail	—	—	—	You can scan a monochrome or a colour document into your E-mail application.	*See Software User's Guide on the CD-ROM*
Scan to Image	—	—	—	You can scan a colour picture into your graphics application.	
Scan to OCR	—	—	—	You can have your text document converted to an editable text file.	
Scan to File	—	—	—	You can scan a monochrome or a colour document into your computer.	
Scan to Media (when a memory card or USB Flash memory drive is inserted)	**Color 150 dpi*** Color 300 dpi Color 600 dpi B/W 200x100 dpi B/W 200 dpi	**PDF***/JPEG **PDF***/JPEG **PDF***/JPEG **TIFF***/PDF **TIFF***/PDF	(File Name) XXXXXX	You can choose the scan resolution, file format and enter a file name for your document.	100
The factory settings are shown in Bold with an asterisk.					

Copy ( )

Level1	Level2	Level3	Options	Descriptions	Page
Quality	—	—	Fast **Normal*** Best	Choose the Copy resolution for your type of document.	79
Enlarge/Reduce	—	—	50% 69% A4→A5 78% LGL→LTR 83% LGL→A4 93% A4→LTR 97% LTR→A4 **100%*** 104% EXE→LTR 142% A5→A4 186% 10x15cm→LTR 198% 10x15cm→A4 200% Custom(25-400%)	You can choose the enlargement or reduction ratio for your type of document.	79
Paper Type	—	—	**Plain Paper*** Inkjet Paper Brother Photo Other Photo Transparency	Choose the paper type that matches the paper in the tray.	82
Paper Size	—	—	Letter Legal **A4*** A5 10x15cm	Choose the paper size that matches the paper in the tray.	82
Brightness	—	—	Light +2 +1 0 -1 -2 Dark	Adjusts the brightness of copies.	81
	The factory settings are shown in Bold with an asterisk.				

Level1	Level2	Level3	Options	Descriptions	Page
Contrast	—	—	+2 +1 0 -1 -2	Adjusts the contrast of copies.	82
RED Adjust		—	+2 +1 0 -1 -2	Adjusts the amount of Red in copies.	82
GREEN Adjust		—	+2 +1 0 -1 -2	Adjusts the amount of Green in copies.	
BLUE Adjust		—	+2 +1 0 -1 -2	Adjusts the amount of Blue in copies.	
Stack/Sort	—	—	**Stack*** Sort	You can choose to stack or sort multiple copies.	81
Page Layout	—	—	**Off(1 in 1)*** 2 in 1 (P) 2 in 1 (L) 4 in 1 (P) 4 in 1 (L) Poster(3 x 3)	You can make N in 1 or Poster copies.	80
Set New Default	—	—	Yes No	You can save your copy settings.	83
Factory Reset	—	—	Yes No	You can restore all settings to the factory settings.	83
	The factory settings are shown in Bold with an asterisk.				

C

PhotoCapture ( )

Level1	Level2	Level3	Options	Descriptions	Page
View Photo(s)	—	—	See the print settings in the following table.	You can preview your photos on the LCD.	89
Print Index	Paper Type	—	**Plain Paper*** Inkjet Paper Brother Photo Other Photo	You can print a thumbnail page.	90
	Paper Size	—	Letter **A4***		
Print Photos	—	—	See the print settings in the following table.	You can print an individual image.	90
Photo Effects	Auto Correct Enhance Skin-Tone Enhance Scenery Remove Red-Eye Monochrome Sepia	—		You can adjust your photos with these settings.	91
Search by Date	—	—	—	You can search your photos from date.	93
Print All Photos	—	—	See the print settings in the following table.	You can print all photos in your memory card or USB Flash memory drive.	94
Slide show	—	—	—	The machine starts a Slide Show of your photos.	94
Trimming	—	—	—	You can trim your photo and print a part of the image.	95
	The factory settings are shown in Bold with an asterisk.				

Print Settings

Option1	Option2	Option3	Option4	Descriptions	Page
Print Quality	Normal **Photo***	—	—	Choose the print quality.	97
Paper Type	Plain Paper Inkjet Paper Brother Photo **Other Photo***	—	—	Choose the paper type.	97
Paper Size	A4 **10x15cm*** 13x18cm Letter	(When A4 or Letter is chosen) 10 x 8cm 13 x 9cm 15 x 10cm 18 x 13cm 20 x 15cm **Max. Size***	—	Choose the paper and print size.	97
Brightness (Does not appear when Photo Effects is chosen.)	Light +2 +1 0 -1 -2 Dark	—	—	Adjusts the brightness.	98
Contrast (Does not appear when Photo Effects is chosen.)	+2 +1 0 -1 -2	—	—	Adjusts the contrast.	98
Color Enhance (Does not appear when Photo Effects is chosen.)	On **Off***	White Balance	+2 +1 0 -1 -2	Adjusts the hue of the white areas.	98
		Sharpness	+2 +1 0 -1 -2	Enhances the detail of the image.	
		Color Density	+2 +1 0 -1 -2	Adjusts the total amount of colour in the image.	
	The factory settings are shown in Bold with an asterisk.				

C

Option1	Option2	Option3	Option4	Descriptions	Page
Cropping	**On*** Off	—	—	Crops the image around the margin to fit the paper size or print size. Turn this feature off if you want to print whole images or prevent unwanted cropping.	99
Borderless	**On*** Off	—	—	Expands the printable area to fit the edges of the paper.	99
Set New Default	Yes No	—	—	You can save your print settings.	99
Factory Reset	Yes No	—	—	You can restore all the settings to factory settings.	99
	The factory settings are shown in Bold with an asterisk.				

Entering Text

When you are setting certain menu selections, such as the Station ID, you may need to enter text into the machine. Most dial pad keys have three or four letters printed on keys. The keys for **#** and ∗ do not have printed letters because they are used for special characters.

By pressing the correct dial pad key repeatedly, you can access the character you want.

Press Key	one time	two times	three times	four times
2	A	B	C	2
3	D	E	F	3
4	G	H	I	4
5	J	K	L	5
6	M	N	O	6
7	P	Q	R	S
8	T	U	V	8
9	W	X	Y	Z

Putting spaces

To enter a space in a fax number, press ▶ once between numbers. To enter a space in a name, press ▶ twice between characters.

Making corrections

If you entered an incorrect letter and want to change it, press ◀ to move the cursor under the incorrect character. Then press **Clear/Back**. Re-enter the correct character. You can also back up and insert letters.

Repeating letters

If you need to enter a letter that is on the same key as the letter before, press ▶ to move the cursor to the right before you press the key again.

Special characters and symbols

Press ∗ or **#**, repeatedly until you see the special character or symbol you want.

Press ∗	for	(space) ! " # $ % & ' ( ) ∗ + , - . /
Press **#**	for	: ; < = > ? @ [ ] ^ _

D Specifications

General

Memory Capacity	32 MB	
ADF (automatic document feeder)	Recommended environment for best results:	
	Up to 10 pages	
	Temperature: 20° C - 30° C	
	Humidity: 50% - 70%	
	Paper: [80 g/m^2] A4 or Letter size	
Paper Tray	100 Sheets [80 g/m^2]	
Printer Type	Ink Jet	
Print Method	Mono:	Piezo with 94 × 1 nozzle
	Colour:	Piezo with 94 × 3 nozzles
LCD (liquid crystal display)	3.3 in. (83.8 mm) Colour LCD	
	Colour	
Power Source	AC 220 to 240V 50/60Hz	
Power Consumption	Power Save Mode:	
	Standby:	Average 5 W
	Operating:	Average 8 W
		Average 33 W
Dimension		

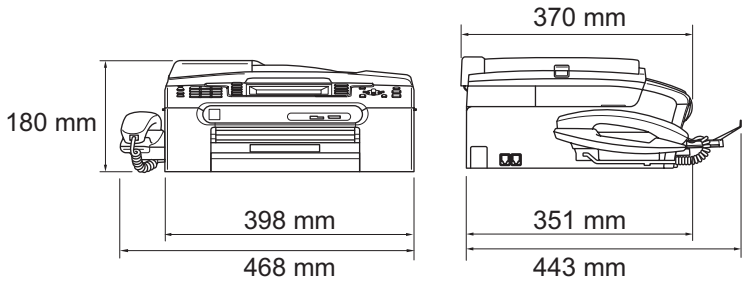

Weight		8.5 kg
Noise	Operating:	50 dB or less [1]
Temperature	Operating:	10 to 35° C
	Best Print Quality:	20 to 33° C
Humidity	Operating:	20 to 80% (without condensation)
	Best Print Quality:	20 to 80% (without condensation)

[1] This depends on printing conditions.

Print media

Paper Input	**Paper Tray** ■ Paper type: Plain paper, inkjet paper (coated paper), glossy paper [2], transparencies [1] [2] and envelopes ■ Paper size: Letter, Legal, Executive, A4, A5, A6, JIS B5, envelopes (commercial No.10, DL, C5, Monarch, JE4), Photo 2L, Index card and Post card [3]. Width: 89 mm - 216 mm Height: 127 mm - 356 mm For more details, see *Paper weight, thickness and capacity* on page 13. ■ Maximum paper tray capacity: Approx. 100 sheets of 80 g/m^2 plain paper **Photo Paper Tray** ■ Paper type: Plain paper, inkjet paper (coated paper) and glossy paper [2] ■ Paper size: Photo 10×15 cm and Photo L Width: 89 mm - 101.6 mm Height: 127 mm - 152.4 mm ■ Maximum paper tray capacity: Approx. 20 sheets
Paper Output	Up to 50 sheets of A4 plain paper (face up print delivery to the output paper tray) [2]

[1] Use only transparencies recommended for inkjet printing.

[2] For glossy paper or transparencies, we recommend removing printed pages from the output paper tray immediately after they exit the machine to avoid smudging.

[3] See *Paper type and size for each operation* on page 12.

Fax

Compatibility	ITU-T Group 3
Coding System	MH/MR/MMR/JPEG
Modem Speed	Automatic Fallback 14400 bps
Document Size	ADF Width: 148 mm to 215.9 mm ADF Height: 148 mm to 355.6 mm Scanner Glass Width: Max. 215.9 mm Scanner Glass Height: Max. 297 mm
Scanning Width	208 mm
Printing Width	204 mm
Greyscale	256 levels
Polling Types	Standard, Secure, Timer Sequential: (Monochrome only)
Contrast Control	Automatic/Light/Dark (manual setting)
Resolution	■ Horizontal 8 dot/mm ■ Vertical Standard 3.85 line/mm (Mono) 7.7 line/mm (Colour) Fine 7.7 line/mm (Mono/Colour) Photo 7.7 line/mm (Mono) Superfine 15.4 line/mm (Mono)
Speed Dial	80 stations × 2 numbers
Groups	Up to 6
Broadcasting [1]	210 stations
Automatic Redial	3 times at 5 minute intervals

Ring Delay	0, 1, 2, 3, 4, 5, 6, 7, 8, 9 or 10 rings
Communication Source	Public switched telephone network.
Memory Transmission	Up to 480 [2]/400 [3] pages
Out of Paper Reception	Up to 480 [2]/400 [3] pages

[1] Black & White only

[2] ‘Pages’ refers to the ‘Brother Standard Chart No. 1’ (a typical business letter, Standard resolution, MMR code). Specifications and printed materials are subject to change without prior notice.

[3] ‘Pages’ refers to the ‘ITU-T Test Chart #1’ (a typical business letter, Standard resolution, MMR code). Specifications and printed materials are subject to change without prior notice.

Digital TAD

TAD	Yes
ICM Recording Time	Max. 29 minutes / Max. 99 messages (Max.180 secs / 1 message)
Toll Saver	Yes
Recording Conversation	Yes
OGM	Yes
OGM Recording Time	20 secs

Copy

Colour/Monochrome	Yes/Yes
Document Size	ADF Width: 148 mm to 215.9 mm ADF Height: 148 mm to 355.6 mm Scanner Glass Width: Max. 215.9 mm Scanner Glass Height: Max. 297 mm Copy Width: Max. 210 mm
Copy Speed	Monochrome: Up to 22 pages/minute (A4 paper) [1] Colour: Up to 20 pages/minute (A4 paper) [1]
Multiple Copies	Stacks/Sorts up to 99 pages
Enlarge/Reduce	25% to 400% (in increments of 1%)
Resolution	(Monochrome) ■ Scans up to 600×1200 dpi ■ Prints up to 1200×1200 dpi (Colour) ■ Scans up to 600×1200 dpi ■ Prints up to 600×1200 dpi

[1] Based on Brother standard pattern (Fast mode/Stack Copy). Copy speeds vary with the complexity of the document.

PhotoCapture Center™

Compatible Media [1]	CompactFlash® (Type I only) (Microdrive™ is not compatible) (Compact I/O cards such as Compact LAN card and Compact Modem card are not supported.) Memory Stick® Memory Stick Pro™ Memory Stick Duo™ with adapter MultiMediaCard™ SecureDigital [2] miniSD™ with adapter xD-Picture Card™ [3] USB Flash memory drive [4]
Resolution	Up to 1200 × 2400 dpi
File Extension (Media Format) (Image Format)	DPOF, EXIF, DCF Photo Print: JPEG [5] Scan to Media: JPEG, PDF (Colour) TIFF, PDF (Black)
Number of Files	Up to 999 files (The folder inside memory cards or USB Flash memory drive is also counted)
Folder	File must be stored in the 4th folder level of the memory card or USB Flash memory drive.
Borderless	Letter, A4, Photo (10×15 cm), Photo 2L (13×18 cm) [6]

1 Memory cards, adapters and USB Flash memory drive are not included.

2 SecureDigital (SD&MMC) : 16MB to 2GB
SecureDigital High Capacity (SDHC) : 4GB to 8GB

3 xD-Picture Card™ Conventional Card from 16MB to 512MB
xD-Picture Card™ Type M from 256MB to 2GB
xD-Picture Card™ Type H from 256MB to 2GB

4 USB 2.0 Standard
USB Mass Storage standard from 16 MB to 8 GB
Support format: FAT12/FAT16/FAT32

5 Progressive JPEG format is not supported.

6 See *Paper type and size for each operation* on page 12.

PictBridge

Compatibility	Supports the Camera & Imaging Products Association PictBridge standard CIPA DC-001. VIsit http://www.cipa.jp/pictbridge for more information.
Interface	USB direct interface

Scanner

Colour/Monochrome	Yes/Yes
TWAIN Compliant	Yes (Windows® 2000 Professional/XP/XP Professional x64 Edition/Windows Vista™)
	Mac OS® X 10.2.4 or greater
WIA Compliant	Yes (Windows® XP [1]/Windows Vista™)
Colour Depth	36 bit colour Processing (Input)
	24 bit colour Processing (Output)
	(Actual Input: 30 bit colour/Actual Output: 24 bit colour)
Resolution	Up to 19200 × 19200 dpi (interpolated) [2]
	Up to 600 × 2400 dpi (optical)
Scanning Speed	Colour: up to 6.02 sec.
	Monochrome: up to 3.82 sec.
	(A4 size at 100 × 100 dpi)
Document Size	ADF Width: 148 mm to 215.9 mm
	ADF Height: 148 mm to 355.6 mm
	Scanner Glass Width: Max. 215.9 mm
	Scanner Glass Height: Max. 297 mm
Scanning Width	210 mm
Greyscale	256 levels

1 Windows® XP in this User's Guide includes Windows® XP Home Edition, Windows® XP Professional, and Windows® XP Professional x64 Edition.

2 Maximum 1200 × 1200 dpi scanning when using the WIA Driver for Windows® XP and Windows Vista™ (resolution up to 19200 × 19200 dpi can be selected by using the Brother scanner utility)

Printer

Printer Driver	Windows® 2000 Professional/XP/XP Professional x64 Edition/Windows Vista™ driver supporting Brother Native Compression mode
	Mac OS® X 10.2.4 or greater : Brother Ink Driver
Resolution	Up to 1200 × 6000 dpi
	1200 × 2400 dpi
	1200 × 1200 dpi
	600 × 600 dpi
	600 × 300 dpi
	600 × 150 dpi
Print Speed	Up to 30 pages/minute (Mono) [1]
	Up to 25 pages/minute (Colour) [1]
Printing Width	204 mm (210 mm) [2]
Disk-Based Fonts	35 TrueType (Windows® only)
Borderless	Letter, A4, A6, Photo (10×15 cm), Index Card, Photo L (89×127 mm), Photo 2L (13×18 cm), Post Card [3]

[1] Based on Brother standard pattern.
A4 size in draft mode.

[2] When you set the Borderless feature to On.

[3] See *Paper type and size for each operation* on page 12.

Interfaces

USB	A USB 2.0 interface cable that is no longer than 2.0 m. [1] [2]
LAN cable [3]	Ethernet UTP cable category 5 or greater.
Wireless LAN	Your machine supports IEEE 802.11b/g wireless communication with your wireless LAN using Infrastructure mode or a wireless Peer-to-Peer connection in Ad-Hoc Mode.

[1] Your machine has a full-speed USB 2.0 interface. This interface is compatible with Hi-Speed USB 2.0; however, the maximum data transfer rate will be 12 Mbits/s. The machine can also be connected to a computer that has a USB 1.1 interface.

[2] Third party USB ports are not supported for Macintosh®.

[3] See the *Network User's Guide* for detailed network specifications.

Computer requirements

SUPPORTED OPERATING SYSTEMS AND SOFTWARE FUNCTIONS						
Operating Systems		**Supported Functions**	**Interface**	**Minimum Processor**	**Recommended RAM**	**Required Hard Disk Space**
Windows® [1]	2000 Professional	Printing, PC-FAX [4] Scanning, Removable Disk [3]	USB 10/100 BASE-TX Wireless 802.11 b/g	Intel® Pentium® II or AMD equivalent	256MB	480MB
	XP Home XP Professional					
	XP Professional x64 Edition			AMD Opteron™ AMD Athlon™ 64 Intel® Xeon™ with Intel® EM64T Intel® Pentium® 4 with Intel® EM64T	512MB	
	Windows Vista™			1 GHz 32-bit (x86) or 64-bit (x64) processor	1GB	1.1GB
Mac® [5]	OS X 10.2.4 or greater	Printing, PC-FAX Send [4] Scanning, Removable Disk [3]	USB [2] 10/100 BASE-TX Wireless 802.11 b/g	PowerPC G4/G5, Intel® Core™ Solo/Duo PowerPC G3 350MHz	256MB	480MB

Conditions:

1 Microsoft® Internet Explorer 5.5 or greater.

2 Third party USB ports are not supported.

3 Removable disk is a function of PhotoCapture Center™.

4 PC Fax supports black and white faxing only.

5 Presto!® PageManager® on the CD-ROM supports Mac OS X 10.3.9 or higher. For Mac OS X 10.2.4-10.3.8 Presto!® PageManager® is available as a download from the Brother Solutions Center.

For the latest driver updates, visit www.brother.com. All trademarks, brand and product names are property of their respective companies.

D

Consumable items

Ink	The machine uses individual Black, Yellow, Cyan and Magenta ink cartridges that are separate from the print head assembly.
Service Life of Ink Cartridge	**Replacement Ink Cartridges** The first time you install the ink cartridges the machine will use extra ink to fill the ink delivery tubes. This is a one-time process that enables high quality printing. Afterward, replacement ink cartridges will print the specified number of pages. Black - Approximately 500 pages at 5% coverage Yellow, Cyan and Magenta - Approximately 400 pages at 5% coverage ■ The above figures assume continuous printing at a resolution of 600 x 600 dpi in normal mode after installing new ink cartridge. ■ The number of pages a cartridge will print may change depending on how often you use the machine and how many pages you print with each use. ■ The machine will automatically and periodically clean the print head assembly, a process that uses a small amount of ink. ■ When the machine identifies a cartridge as empty there may be a small amount of ink left in it. This is necessary to prevent air from drying out and damaging the print head assembly.
Replacement Consumables	<Black> LC960BK, <Cyan> LC960C, <Magenta>LC960M, <Yellow> LC960Y

What is Innobella™?

Innobella™ is a range of genuine consumables offered by Brother. The name “Innobella™” derives from the words “Innovation” and “Bella” (meaning “Beautiful” in Italian) and is a representation of the “innovative” technology providing you with “beautiful” and “long lasting” print results.

When you print photo images, Brother recommends Innobella™ glossy photo paper (BP61GL series) for high quality. Brilliant prints are made easier with Innobella™ Ink and paper.

Network (LAN)

LAN	You can connect your machine to a network for Network Printing, Network Scanning and PC Fax Send and PC Fax Receive [1] (Windows® only). Also included is Brother BRAdmin Light [2] Network Management software.
Support for	Windows® 2000 Professional/XP/XP Professional x64 Edition/Windows Vista™
	Mac OS® X 10.2.4 or greater
	Ethernet 10/100 BASE-TX Auto Negotiation (Wired LAN)
	IEEE 802.11 b/g (Wireless LAN)
Protocols	TCP/IP
	ARP, RARP, BOOTP, DHCP, APIPA (Auto IP), NetBIOS Name Resolution, WINS DNS Resolver, LPR/LPD, Custom Raw Port/Port9100, FTP Server, mDNS, Web Services, TELNET, SNMP, TFTP, LLTD
Network Security	SSID/ESSID, 128 (104) / 64 (40) bit WEP, WPA/WPA2-PSK (TKIP/AES)
SecureEasySetup™	Yes (simple setup with your SecureEasySetup™-capable access point/router)
AOSS	Yes (simple setup with your AOSS™-capable access point/router)

[1] See the Computer Requirements chart on page 173.

[2] If you require more advanced printer management, use the latest Brother BRAdmin Professional utility version that is available as a download from http://solutions.brother.com.

E Glossary

This is a comprehensive list of features and terms that appear in Brother manuals. Availability of these features depends on the model you purchased.

ADF (automatic document feeder)

The document can be placed in the ADF and scanned one page at a time automatically.

Auto Reduction

Reduces the size of incoming faxes.

Automatic fax transmission

Sending a fax without picking up the handset of an external telephone.

Automatic Redial

A feature that enables your machine to redial the last fax number after five minutes if the fax did not go through because the line was busy.

Backup Print

Your machine prints a copy of every fax that is received and stored in memory.This is a safety feature so you will not lose messages during a power failure.

Batch Transmission

(Black and white faxes only) As a cost saving feature, all delayed faxes to the same fax number can be sent as one transmission.

Beeper Volume

Volume setting for the beep when you press a key or make an error.

Brightness

Changing the Brightness makes the whole image lighter or darker.

Broadcasting

The ability to send the same fax message to more than one location.

Caller ID

A service purchased from the telephone company that lets you see the number (or name) of the party calling you.

CNG tones

The special tones (beeps) sent by fax machines during automatic transmission to tell the receiving machine that a fax machine is calling.

Coding method

Method of coding the information contained in the document. All fax machines must use a minimum standard of Modified Huffman (MH). Your machine is capable of greater compression methods, Modified Read (MR), Modified Modified Read (MMR) and JPEG, if the receiving machine has the same capability.

Communication error (Comm. Error)

An error during fax sending or receiving, usually caused by line noise or static.

Compatibility group

The ability of one fax unit to communicate with another. Compatibility is assured between ITU-T Groups.

Contrast

Setting to compensate for dark or light documents, by making faxes or copies of dark documents lighter and light documents darker.

Colour Enhancement

Adjusts the colour in the image for better print quality by improving sharpness, white balance and colour density.

Delayed Fax

Sends your fax at a specified time later.

Dual Access

Your machine can scan outgoing faxes or scheduled jobs into memory at the same time it is sending a fax from memory or receiving or printing an incoming fax.

ECM (Error Correction Mode)

Detects errors during fax transmission and resends the pages of the fax that had an error.

Extension telephone

A telephone using the same line as your fax but plugged into a separate wall socket.

External telephone

A TAD (telephone answering device) or telephone that is connected to your machine.

F/T Ring Time

The length of time that the Brother machine rings (when the Receive Mode setting is Fax/Tel) to notify you to pick up a voice call that it answered.

Fax Detect

Enables your machine to respond to CNG tones if you interrupt a fax call by answering it.

Fax Forwarding

Sends a fax received into the memory to another pre-programmed fax number.

Fax Storage

You can store received faxes in memory.

Fax tones

The signals sent by sending and receiving fax machines while communicating information.

Fax/Tel

You can receive faxes and telephone calls. Do not use this mode if you are using a telephone answering device (TAD).

Fine resolution

Resolution is 203 × 196 dpi. It is used for small print and graphs.

Greyscale

The shades of grey available for copying, scanning and faxing photographs.

Group number

A combination of Speed Dial numbers that are stored in a Speed Dial location for Broadcasting.

Help list

A printout of the complete Menu table that you can use to program your machine when you do not have the User's Guide with you.

Fax Journal

Lists information about the last 200 incoming and outgoing faxes. TX means Transmit. RX means Receive.

Innobella™

Innobella™ is a range of genuine consumables offered by Brother.For best quality results Brother recommends Innobella™ Ink and Paper.

Journal Period

The pre-programmed time period between automatically printed Fax Journal Reports. You can print the Fax Journal on demand without interrupting the cycle.

LCD (liquid crystal display)

The display screen on the machine that shows interactive messages during On-Screen Programming and shows the date and time when the machine is idle.

Manual fax

On some models you can dial a fax number and listen to the receiving fax machine answer your call before you press **Mono Start** or **Colour Start** to begin sending the fax.

Menu mode

Programming mode for changing your machine's settings.

Out of Paper Reception

Receives faxes into the machine's memory when the machine is out of paper.

Overseas Mode

Makes temporary changes to the fax tones to accommodate noise and static on overseas telephone lines.

Pause

Allows you to place a 3.5 second delay in the dialling sequence stored on Speed Dial numbers. Press **Redial/Pause** as many times as needed for longer pauses.

PhotoCapture Center™

Allows you to print digital photos from your digital camera at high resolution for photo quality printing.

Photo resolution (Mono only)

A resolution setting that uses varying shades of grey for the best representation of photographs.

PictBridge

Allows you to print photos directly from your digital camera at high resolution for photo quality printing.

Polling

The process of a fax machine calling another fax machine to retrieve waiting fax messages.

Pulse

A form of rotary dialling on a telephone line.

Quick Dial List

A listing of names and numbers stored in Speed Dial memory, in numerical order.

Real Time Transmission

When memory is full, you can send faxes in real time.

Remaining jobs

You can check which jobs are waiting in memory and cancel jobs individually.

Remote Access Code

Your own four-digit code (---∗) that allows you to call and access your machine from a remote location.

Remote Activation Code

Press this code (∗ **5 1**) when you answer a fax call on an extension or external telephone.

Remote Deactivation Code (For Fax/Tel mode only)

When the machine answers a voice call, it pseudo/double-rings. You can pick up at an extension telephone by pressing this code (**# 5 1**).

Remote Retrieval Access

The ability to access your machine remotely from a touch tone telephone.

Resolution

The number of vertical and horizontal lines per inch. See: Standard, Fine, Super Fine and Photo.

Ring Delay

The number of rings before the machine answers in `Fax Only` and `Fax/Tel` modes.

Ring Volume

Volume setting for the machine's ring.

Scanning

The process of sending an electronic image of a paper document into your computer.

Scan to Media

You can scan a monochrome or colour document into a memory card or USB Flash memory drive. Monochrome images will be in TIFF or PDF file format and colour images may be in PDF or JPEG file format.

Search

An electronic, numerical or alphabetical listing of stored Speed Dial and Group numbers.

Speed Dial

A pre-programmed number for easy dialling. You must press **Speed Dial**, the two digit code, and **Mono Start** or **Colour Start** to start the dialling process.

Standard resolution

203 × 97 dpi. It is used for regular size text and quickest transmission.

Station ID

The stored information that appears on the top of faxed pages. It includes the sender's name and fax number.

Super Fine resolution (Mono only)

392 × 203 dpi. Best for very small print and line art.

TAD (telephone answering device)

You can connect an external TAD to your machine.

Temporary settings

You can choose certain options for each fax transmission and copy without changing the default settings.

Tone

A form of dialling on the telephone line used for Touch Tone telephones.

Transmission

The process of sending faxes over the phone lines from your machine to the receiving fax machine.

Transmission Verification Report

A listing for each fax sent, that shows its date, time and number.

User Settings

A printed report that shows the current settings of the machine.

F Index

A

Access codes, storing and dialling 58
ADF (automatic document feeder) 9, 30
Answering machine (TAD) 48
  connecting 49
Apple® Macintosh®
  See Software User's Guide on the CD-ROM
  Automatic
  fax receive 38
    Fax Detect 41

B

Broadcasting 32
  setting up Groups for 57

C

Caller ID
  print list 48
Cancelling
  Fax Forwarding 70
  jobs awaiting redial 35
Cleaning
  paper pick-up roller 138
  print head 139
  printer platen 137
  scanner 137
Connecting
  external TAD 48
  external telephone 50
Consumable items 174
Control panel overview 6
ControlCenter
  See Software User's Guide on the CD-ROM
  Copy
  brightness 81
  colour saturation 82
  contrast 82
  enlarge/reduce 79
  enter Copy mode 78
  multiple 78
  out of memory 83
  page layout (N in 1) 80
  paper size 82
  paper type 82
  quality 79
  return to default 83
  set new default 83
  single 78
  sort (ADF only) 81
  using ADF 81
  using scanner glass 10
Cordless phone 50
Custom telephone features on a single line 122

D

Dialling
  a pause 54
  Caller ID history 53
  Combining QuickDial numbers 56
  Groups 32
  manual 52
  Outgoing Call 53
  Speed Dial 52
Direct printing
  from a non-PictBridge camera 104
  from a PictBridge camera 102
Document
  loading 9, 10
Dual Access 34

E

Envelopes 12, 13, 16, 17
Error messages on LCD 125
  Comm. Error 125
  Ink Empty 126
  Near Empty 126
  No Paper Fed 126
  Not Registered 52
  Out of Memory 127
    while scanning a document 83
  Unable to Clean 127
  Unable to Init. 127
  Unable to Print 128
  Unable to Scan 128
Extension telephone, using 51
External telephone, connecting 50

F

Fax codes
changing 51, 69
Fax Receive Code 50, 51
Remote Access Code 69
Remote Activation Code 41
Telephone Answer Code 50, 51
using 51
Fax Detect 41
Fax Forwarding
changing remotely 70, 71
programming a number 63
Fax Storage 64
printing from memory 43
turning off 68
turning on 64
Fax, from PC
See Software User's Guide on the CD-ROM
Fax, stand-alone
receiving 38
at end of conversation 39, 43
difficulties 119, 121
F/T Ring Time, setting 40
Fax Detect 41
Fax Forwarding 70
Fax Preview 64, 65
from extension phone 50, 51
into PC 66
into the memory 42
printing from memory 43
Receive Mode, choosing 38
reducing to fit on paper 42
retrieving from a remote site 70, 71
Ring Delay, setting 40
telephone line interference 133
sending 30, 74
at end of conversation 36
Broadcasting 32
cancelling from memory 35
colour fax 31
contrast 33
delayed batch transmission 35
delayed fax 35
enter Fax mode 30
from memory (Dual Access) 34
from scanner glass 30
manual 36
overseas 35
Real Time Transmission 34
Resolution 34
return to factory setting 36
set new default 36
telephone line interference 133
Fax/Tel mode
Announcement 59
answering at extension phones 50, 51
double-ringing (voice calls) 40
F/T Ring Time 40
Fax Receive Code 50, 51
Ring Delay 40
Telephone Answer Code 50, 51

G

Greyscale 164, 170
Groups for Broadcasting 57

H

Help
LCD messages 145
using Mode and menu keys 145
Menu Table 145, 146

I

Ink cartridges
checking ink volume 141
ink dot counter 134
replacing 134
Innobella™ 174

J

Jams
document 130
paper 130

L

LCD (liquid crystal display) 145
Brightness 24, 25
Contrast 24
Dim Timer 24
Help List 73
Off Timer 25
Loading envelopes and post cards 16

Loading paper 14

M

Macintosh®
See Software User's Guide on the CD-ROM
Maintenance, routine
replacing ink cartridges 134
Manual
dialling 52
receive 38
transmission 36
Memory Security 28, 76
Memory Storage 145
Menu Table 145
Mode, entering
Copy 78
Fax 30
PhotoCapture 6
Scan 6
Multi-line connections (PBX) 49

N

Network
Printing
See Network User's Guide on the CD-ROM
Scanning
See Software User's Guide on the CD-ROM

O

Outgoing Message (OGM) 59

P

Packing the machine 143
Paper 11, 16, 163
capacity 13
loading 14, 16, 17
printable area 19
size 22
size of document 9
type 12, 22
Phone line
connections 49
multi-line (PBX) 49
Photo Paper Tray 17
PhotoCapture Center™
Adding Effect 91
Borderless 99
CompactFlash® 86
Cropping 99
DPOF printing 95
from PC
See Software User's Guide on the CD-ROM
Memory Stick Pro™ 86
Memory Stick® 86
MultiMediaCard™ 86
Photo Effects
Auto Correct 91
Enhance Scenery 92
Enhance Skin-Tone 91
Monochrome 93
Remove Red-Eye 92
Sepia 93
Preview photos 89
Print settings
Brightness 98
Colour enhancement 98
Contrast 98
Paper type & size 97
Quality 96, 97
Return to factory setting 99
Set new default 99
Printing
all photos 94
index 90
photos 90
Scan to memory card 100
Scan to USB flash memory 100
Search by Date 93
SecureDigital 86
Slide-Show 94
specifications 168
Trimming 95
xD-Picture Card™ 86
PictBridge
DPOF Printing 103
Power failure 145
Print
difficulties 119, 121
drivers 171
fax from memory 43
paper jams 131
report 73

resolution 171
specifications 171
Printing
on small paper 18
See Software User's Guide on the CD-ROM
Programming your machine 145

Q

Quick Dial
Broadcasting 32
using Groups 32
Group Dial 55
changing 56
setting up Groups for Broadcasting ... 57
Search 52
Speed Dial
changing 55, 56
setting up by 2-digit location 54
setting up from Caller ID history 55
setting up from outgoing calls 55
using 52

R

Receive Mode 38
External TAD 38
Fax Only 38
Fax/Tel 38
Manual 38
Redial/Pause 53
Reducing
copies 79
incoming faxes 42
Remote Retrieval 69
access code 69
commands 70
getting your faxes 71
Remote Setup
See Software User's Guide on the CD-ROM
Reports 72
Caller ID List 48
Fax Journal 73
Journal Period 72
Help List 73
how to print 73
Network Configuration 73
Quick Dial List 73
Transmission Verification 72, 73
User Settings 73
Resolution
copy 167
fax 164
print 171
scan 170
setting for next fax 34
Ring Delay, setting 40

S

Safety Instructions 111
Scannable area 10
Scanning
See Software User's Guide on the CD-ROM
Shipping the machine 143
Speed Dial
changing 56
dialling 52
storing 54

T

TAD (telephone answering device), external 38, 48
connecting 48, 49
receive mode 38
recording OGM 49
TAD mode
a conversation 62
erasing messages 61
Fax/Tel OGM 60
outgoing message (OGM) 59
playing voice messages 61
recording a conversation 62
setting toll saver 62
setting up 59, 60
Telephone line
difficulties 121
interference 133
Text, entering 160
special characters 160
Transferring your faxes or Fax Journal report 129
Transparencies 11, 13, 163
Troubleshooting 119
checking ink volume 141
document jam 130

F

error messages on LCD 125
if you are having difficulty
copying 123
document jam 130
incoming calls 122
Network 124
PhotoCapture Center™ 124
printing 119
printing received faxes 121
receiving faxes 121
scanning 123
software 123
telephone line or connections 121
paper jam 131

V

Volume, setting
beeper 23
ring 23
speaker 23

W

Wireless Network
See Quick Setup Guide and Network User's Guide on the CD-ROM

Visit us on the World Wide Web
http://www.brother.com

This machine is approved for use in the country of purchase only. Local Brother companies or their dealers will only support machines purchsed in their own countries.

CHN-ENG