brother®

USER'S GUIDE

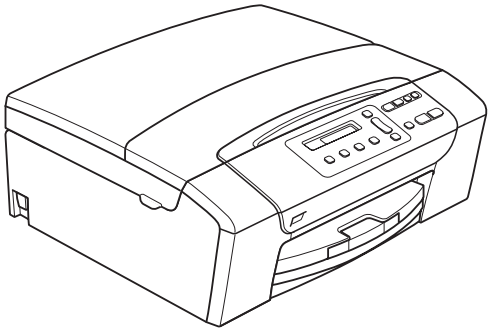

DCP-145C
DCP-165C
DCP-185C

Version 0

ARL/ASA/NZ

If you need to call Customer Service

Please complete the following information for future reference:

Model Number: DCP-145C, DCP-165C and DCP-185C (Circle your model number)

Serial Number: [1] _____

Date of Purchase: _____

Place of Purchase: _____

[1] The serial number is on the back of the unit. Retain this User's Guide with your sales receipt as a permanent record of your purchase, in the event of theft, fire or warranty service.

Register your product on-line at

http://www.brother.com/registration/

By registering your product with Brother, you will be recorded as the original owner of the product. Your registration with Brother:

- may serve as confirmation of the purchase date of your product should you lose your receipt; and
- may support an insurance claim by you in the event of product loss covered by insurance.

© 2008 Brother Industries, Ltd.

Compilation and Publication Notice

Under the supervision of Brother Industries Ltd., this manual has been compiled and published, covering the latest product descriptions and specifications.

The contents of this manual and the specifications of this product are subject to change without notice.

Brother reserves the right to make changes without notice in the specifications and materials contained herein and shall not be responsible for any damages (including consequential) caused by reliance on the materials presented, including but not limited to typographical and other errors relating to the publication.

Table of Contents

Section I General

1 General Information 2

Using the documentation 2
Symbols and conventions used in the documentation 2
Accessing the Software User's Guide 2
Viewing Documentation 2
Accessing Brother Support (For Windows®) 5
Control panel overview 6
Warning LED indications 7

2 Loading documents and paper 8

Loading paper and other print media 8
Loading envelopes and post cards 10
Removing small printouts from the machine 11
Printable area 12
Acceptable paper and other print media 13
Recommended print media 13
Handling and using print media 14
Choosing the right print media 15
Loading documents 17
Using the ADF (DCP-185C only) 17
Using the scanner glass 18
Scannable area 18

3 General Setup 19

LCD screen 19
Changing LCD language 19
Improving the LCD angle 19
Sleep Mode 19
Printing Reports 20
How to print a report 20

Section II Copy

4 Making copies 22

How to copy 22
Making a single copy 22
Making multiple copies 22
Stop copying 22
Copy options 22
Changing copy speed and quality 23
Enlarging or reducing the image copied 23
Making N in 1 copies or a poster (Page Layout) 24
Sorting copies using the ADF (Monochrome only) (DCP-185C only) 25
Adjusting Brightness and Contrast 26
Paper options 27

Section III Direct Photo Printing

5 Printing photos from a memory card or USB Flash memory drive 30

PhotoCapture Center™ Operations 30
Printing from a memory card or USB Flash memory drive without a PC 30
Scanning to a memory card or USB Flash memory drive without a PC 30
Using PhotoCapture Center™ from your computer 30
Using memory card or USB Flash memory drive 30
Memory cards (DCP-165C and DCP-185C only) or USB Flash memory drive folder structure 31
Getting started 32
How to print from a memory card or USB Flash memory drive 33
Print Index (Thumbnails) 33
Printing Images 34
DPOF printing 35
PhotoCapture Center™ print settings 36
Print quality 36
Paper Options 36
Colour Enhancement 37
Cropping 39
Borderless printing 39
Date Print 39
Scan to a memory card or USB Flash memory drive 40
Changing the image quality 40
Changing the monochrome file format 41
Changing the colour file format 41
Understanding the Error Messages 41

6 Printing photos from a camera 42

Printing photos directly from a PictBridge camera 42
PictBridge requirements 42
Setting your digital camera 42
Printing Images 43
DPOF printing 43
Printing photos directly from a digital camera (without PictBridge) 44
Printing Images 44
Understanding the Error Messages 45

Section IV Software

7 Software features 48

Section V Appendixes

A Safety and Legal 50

Choosing a location 50
To use the machine safely 51
Important safety instructions 54
IMPORTANT - For your safety 55
Radio interference 55
International ENERGY STAR® Compliance Statement 55
Legal limitations for copying 56
Trademarks 57

B Troubleshooting and Routine Maintenance 58

Troubleshooting 58
If you are having difficulty with your machine 58
Error and Maintenance messages 62
Document jam (DCP-185C only) 65
Printer jam or paper jam 66
Routine maintenance 68
Replacing the ink cartridges 68
Cleaning the outside of the machine 70
Cleaning the scanner 71
Cleaning the machine printer platen 72
Cleaning the paper pick-up roller 72
Cleaning the print head 73
Checking the print quality 73
Checking the print alignment 74
Checking the ink volume 75
Machine Information 75
Checking the serial number 75
Packing and shipping the machine 76

C Menu and Features 78

On-screen programming 78
Menu table 78
Menu keys 78
Menu Table 80

D Specifications 85

General 85
Print media 87
Copy 88
PhotoCapture Center™ 89
PictBridge 90
Scanner 91
Printer 92
Interfaces 92
Computer requirements 93
Consumable items 94

E Glossary 95

F Index 96

Section I

General

General Information 2
Loading documents and paper 8
General Setup 19

1 General Information

Using the documentation

Thank you for buying a Brother machine! Reading the documentation will help you make the most of your machine.

Symbols and conventions used in the documentation

The following symbols and conventions are used throughout the documentation.

Bold	Bold typeface identifies specific buttons on the machine's control panel, or on the computer screen.
Italics	Italicized typeface emphasizes an important point or refers you to a related topic.
`Courier New`	Text in Courier New font identifies messages on the LCD of the machine.

Warnings tell you what to do to prevent possible personal injury.

Cautions specify procedures you must follow or avoid to prevent possible damage to the machine or other objects.

Electrical Hazard icons alert you to possible electrical shock.

Notes tell you how you should respond to a situation that may arise or give tips about how the operation works with other features.

Improper Setup icons alert you to devices and operations that are not compatible with the machine.

Accessing the Software User's Guide

This User's Guide does not contain all the information about the machine such as how to use the advanced features of the Printer and Scanner. When you are ready to learn detailed information about these operations, read the Software User's Guide that is on the CD-ROM.

Viewing Documentation

Viewing Documentation (For Windows®)

To view the documentation, from the **Start** menu, point to **Brother**, **DCP-XXXX** (where XXXX is your model number) from the programs group, and then select **User's Guides in HTML format**.

If you have not installed the software, you can find the documentation by following the instructions below:

1. Turn on your PC. Insert the Brother CD-ROM into your CD-ROM drive.
2. If the model name screen appears, click your model name.

3 If the language screen appears, click your language. The CD-ROM Main Menu will appear.

Note

If this window does not appear, use Windows® Explorer to run the start.exe program from the root directory of the Brother CD-ROM.

4 Click **Documentation** to view the **Software User's Guide** in HTML format.

5 Click the documentation you want to read.

- **HTML documents**: **Software User's Guide** in HTML format.

  This format is recommended for viewing on your computer.

- **PDF documents**: **User's Guide** for stand-alone operations, **Software User's Guide** in PDF format.

  This format is recommended for printing the manuals. Click to go to the Brother Solution Center, where you can view or download the PDF documents. (Internet access and PDF Reader software are required.)

How to find Scanning instructions

There are several ways you can scan documents. You can find the instructions as follows:

Software User's Guide

- *Scanning* (For Windows® 2000 Professional/Windows® XP and Windows Vista®)
- *ControlCenter3* (For Windows® 2000 Professional/Windows® XP and Windows Vista®)

ScanSoft™ PaperPort™ 11SE with OCR How-to-Guide

- The complete ScanSoft™ PaperPort™ 11SE with OCR How-to-Guides can be viewed from the Help Selection in the ScanSoft™ PaperPort™ 11SE application.

Presto!® PageManager® User's Guide (Hong Kong users only)

- Instructions for scanning directly from Presto!® PageManager®. The complete Presto!® PageManager® User's Guide can be viewed from the Help selection in the Presto!® PageManager® application.

Viewing Documentation (For Macintosh®)

1. Turn on your Macintosh®. Insert the Brother CD-ROM into your CD-ROM drive. The following window will appear.

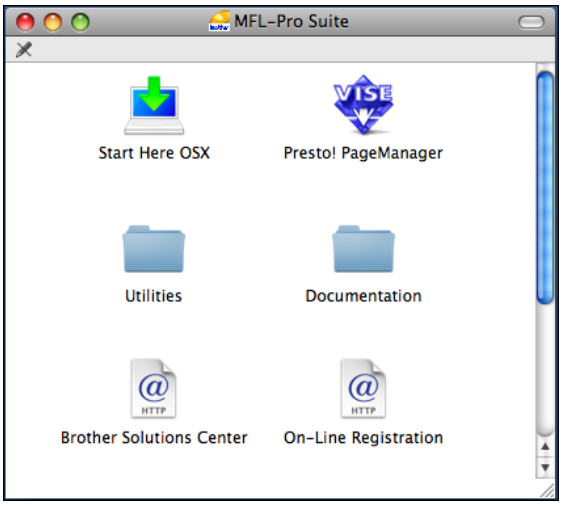

2. Double-click the **Documentation** icon.
3. Double-click your language folder.
4. Double-click **top.html** file to view the **Software User's Guide** in HTML format.

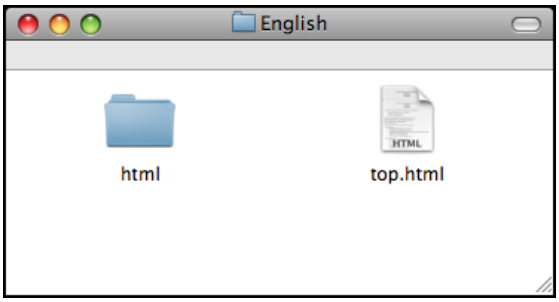

5. Click the documentation you want to read.
   - **Software User's Guide**: Software User's Guide in HTML format

How to find Scanning instructions

There are several ways you can scan documents. You can find the instructions as follows:

Software User's Guide

- *Scanning*
  (For Mac OS® X 10.2.4 or greater)
- *ControlCenter2*
  (For Mac OS® X 10.2.4 or greater)

Presto!® PageManager® User's Guide

- Instructions for scanning directly from Presto!® PageManager®. The complete Presto!® PageManager® User's Guide can be viewed from the Help selection in the Presto!® PageManager® application.

Accessing Brother Support (For Windows®)

You can find all the contacts you will need, such as Web support (Brother Solutions Center).

- Click **Brother Support** on the Main Menu. The following screen will appear:

- To access our web site (www.brother.com), click **Brother Home Page**.
- For the latest news and product support information (http://solutions.brother.com), click **Brother Solutions Center**.
- To visit our web site for original Brother supplies (http://www.brother.com/original/), click **Supplies Information**.
- To access the Brother CreativeCenter (http://www.brother.com/creativecenter/) for FREE photo projects and printable downloads, click **Brother CreativeCenter**.
- To return to the main page, click **Back** or if you have finished, click **Exit**.

Control panel overview

The **DCP-145C**, **DCP-165C** and **DCP-185C** have the same control panel keys.

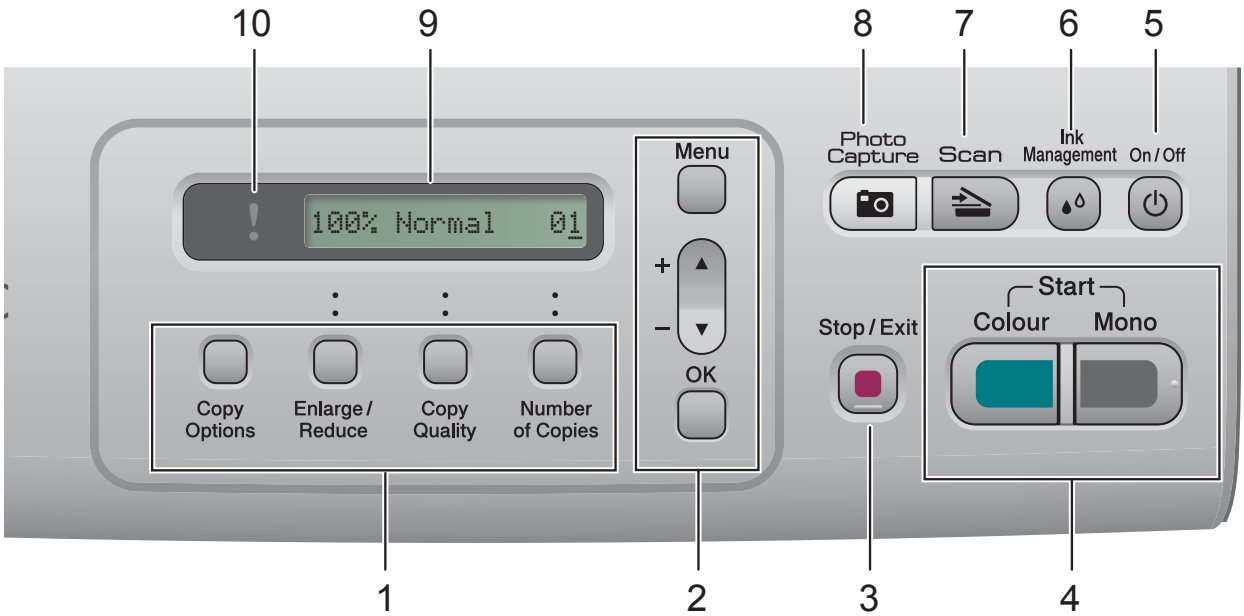

1 Copy keys:

Lets you temporarily change the copy settings when in copy mode.

- **Copy Options**
  You can quickly and easily select temporary settings for copying.
- **Enlarge/Reduce**
  Lets you enlarge or reduce copies depending on the ratio you select.
- **Copy Quality**
  Use this key to temporarily change the quality of your copies.
- **Number of Copies**
  Use this key to make multiple copies.

2 Menu keys:

- **Menu**
  Lets you access the main menu.
- +▲ or -▼
  Press to scroll through the menus and options.
- **OK**
  Lets you select a setting.

3 Stop/Exit

Stops an operation or exits from a menu.

4 Start keys:

- **Mono Start**
  Lets you start making copies in monochrome. Also lets you start a scanning operation (in colour or mono, depending on the scanning setting in the ControlCenter software).
- **Colour Start**
  Lets you start making copies in full colour. Also lets you start a scanning operation (in colour or mono, depending on the scanning setting in the ControlCenter software).

5 On/Off

You can turn the machine on and off.

If you turn the machine off, it will still periodically clean the print head to maintain print quality.

6 Ink Management

Lets you clean the print head, print a test page to check the print quality, and check the available ink volume.

7 Scan

Lets you access Scan mode.

8 **Photo Capture**

Lets you access the PhotoCapture Center™ mode.

9 **LCD (liquid crystal display)**

Displays messages on the screen to help you set up and use your machine.

10 **Warning LED**

Blinks in orange when the LCD displays an error or an important status message.

Note

Most of the illustrations in this User's Guide show the DCP-145C.

Warning LED indications

The Warning LED (Light Emitting Diode) is a light that shows the DCP status. The LCD shows the current machine status when the machine is idle.

LED	DCP status	Description
Off	Ready	The DCP is ready for use.
Orange	Cover open	The cover is open. Close the cover. (See *Error and Maintenance messages* on page 62.)
	Cannot print	Replace the ink cartridge with a new one. (See *Replacing the ink cartridges* on page 68.)
	Paper error	Put paper in the tray or clear the paper jam. Check the LCD message. (See *Troubleshooting and Routine Maintenance* on page 58.)
	Other messages	Check the LCD message. (See *Troubleshooting and Routine Maintenance* on page 58.)

2 Loading documents and paper

Loading paper and other print media

1. If the paper support flap is open, close it, and then pull the paper tray completely out of the machine.

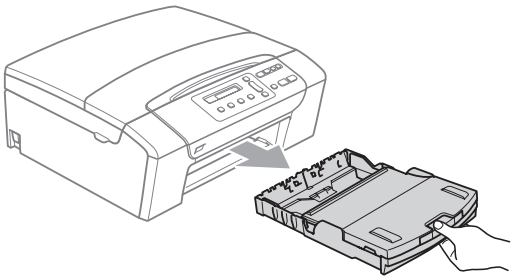

2. Lift the output paper tray cover (1).

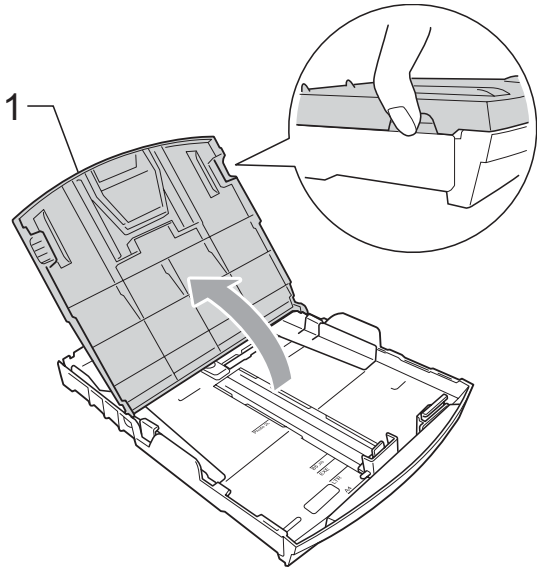

3. With both hands, gently press and slide the paper side guides (1) and paper length guide (2) to fit the paper size. Make sure that the triangular marks (3) on the paper side guides (1) and paper length guide (2) line up with the mark for the paper size you are using.

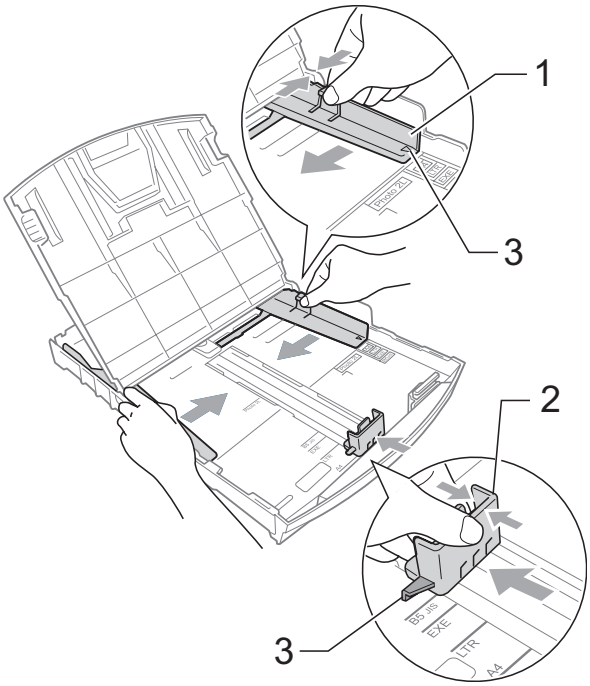

4. Fan the stack of paper well to avoid paper jams and misfeeds.

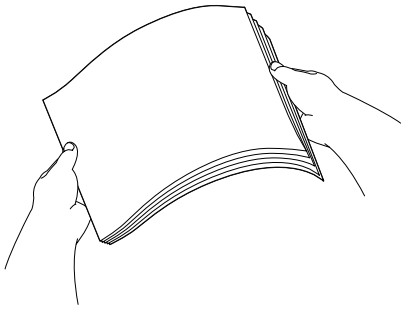

Note

Always make sure that the paper is not curled.

5 Gently put the paper into the paper tray print side down and top edge in first. Check that the paper is flat in the tray.

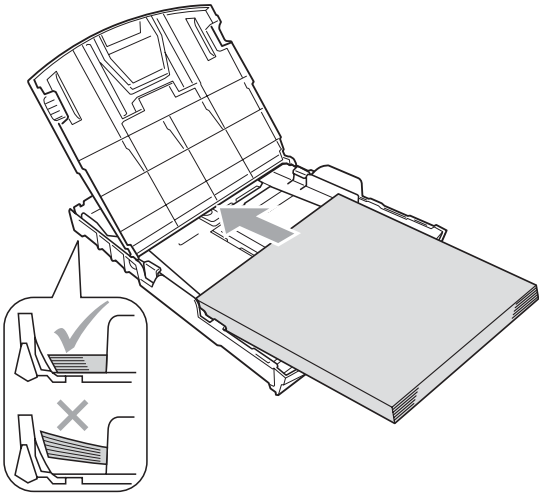

Note

When you use Legal size paper, press and hold the universal guide release button (1) as you slide out the front of the paper tray.

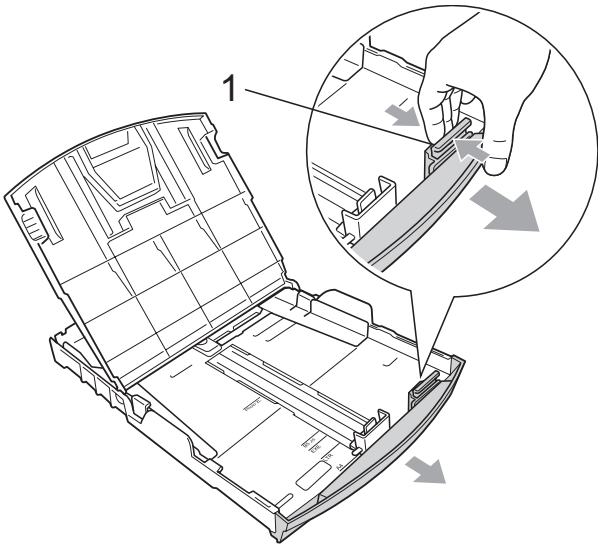

6 Gently adjust the paper side guides (1) to the paper with both hands.
Make sure the paper side guides touch the sides of the paper.

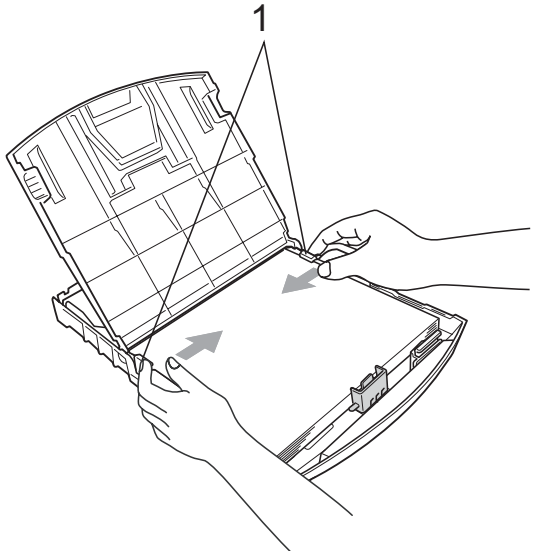

Note

Be careful that you do not push the paper in too far; it may lift at the back of the tray and cause feed problems.

7 Close the paper tray cover.

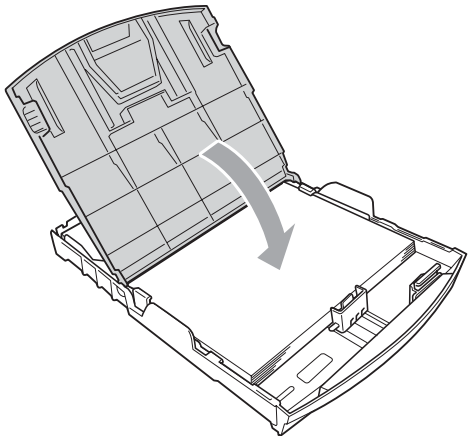

8 Slowly push the paper tray completely into the machine.

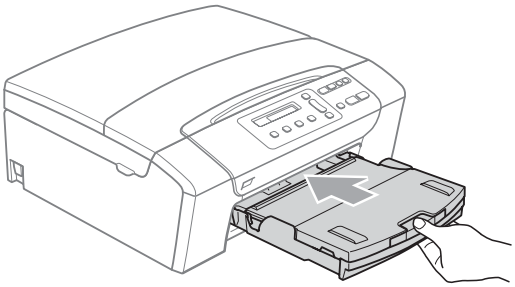

9 While holding the paper tray in place, pull out the paper support (1) until it clicks and unfold the paper support flap (2).

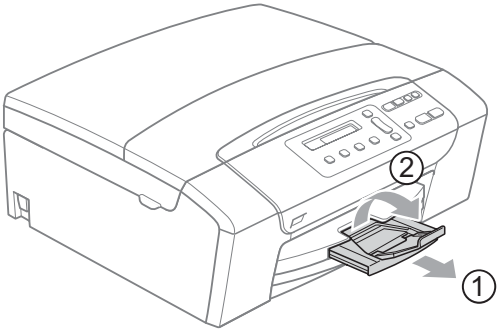

Note

Do not use the paper support flap for Legal paper.

Loading envelopes and post cards

About envelopes

- Use envelopes that weigh between 75 to 95 gsm.
- Some envelopes need margin settings to be set in the application. Make sure you do a test print first before printing many envelopes.

CAUTION

DO NOT use any of the following types of envelopes, as they will cause paper feed problems:

- If they are of a baggy construction.
- That are embossed (have raised writing on them).
- That have clasps or staples.
- That are pre-printed on the inside.

Glue	Double flap
	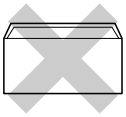

Occasionally you may experience paper feed problems caused by the thickness, size and flap shape of the envelopes you are using.

How to load envelopes and postcards

1. Before loading, press the corners and sides of envelopes or post cards to make them as flat as possible.

Note

If envelopes or post cards are ‘double-feeding’, put one envelope in the paper tray at a time.

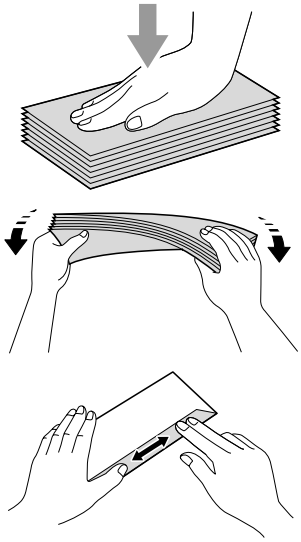

2. Put envelopes or post cards into the paper tray with the address side down and the leading edge (top of the envelopes) in first. With both hands, gently press and slide the paper side guides (1) and paper length guide (2) to fit the size of the envelopes or post cards.

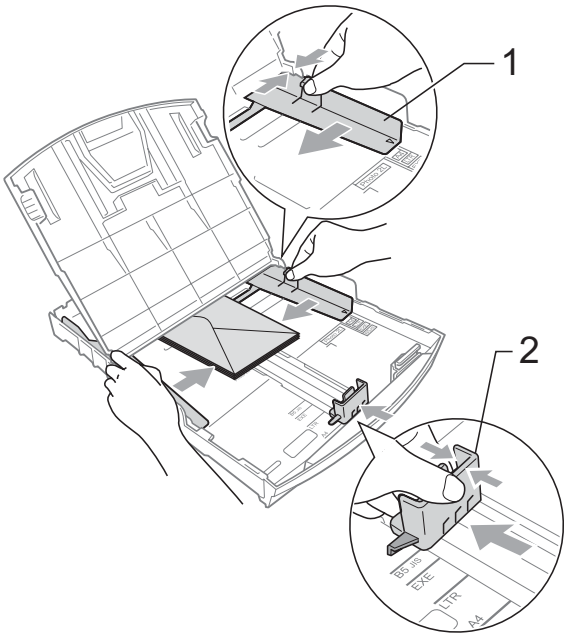

If you have problems when printing on envelopes, try the following suggestions:

1. Make sure the flap is either to the side of the envelope or to the back edge of the envelope when printing.
2. Adjust the size and margin in your application.

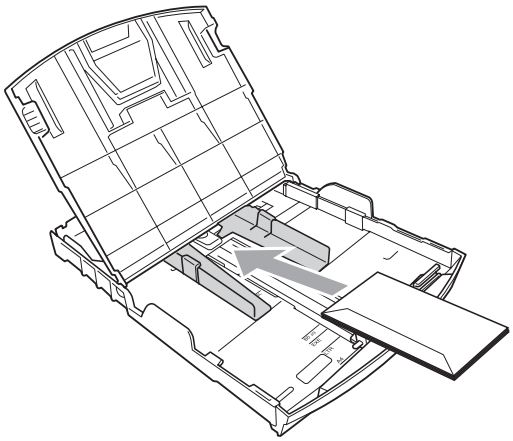

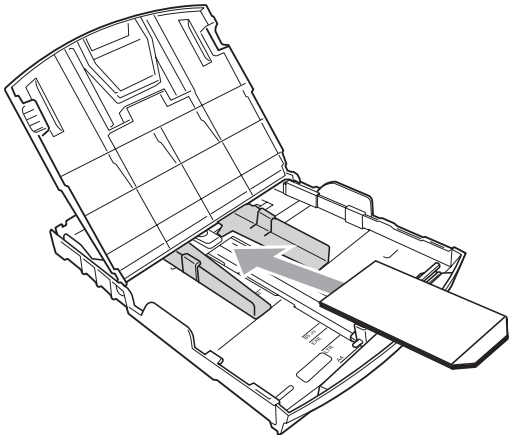

Removing small printouts from the machine

When the machine ejects small paper onto the output paper tray you may not be able to reach it. Make sure printing has finished, and then pull the tray completely out of the machine.

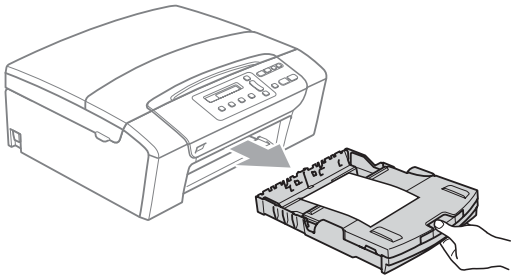

Printable area

The printable area depends on the settings in the application you are using. The figures below show the unprintable areas on cut sheet paper and envelopes. The machine can print in the shaded areas of cut sheet paper when the Borderless print feature is available and turned on. (See *Borderless printing* on page 39.)

Cut Sheet Paper

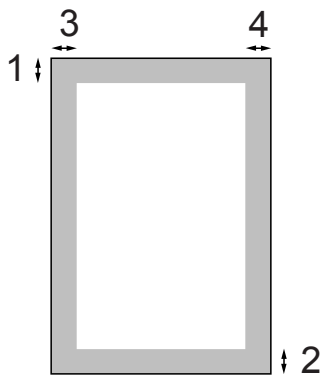

Envelopes

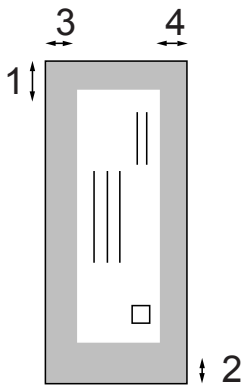

	Top (1)	Bottom (2)	Left (3)	Right (4)
Cut Sheet	3 mm	3 mm	3 mm	3 mm
Envelopes	12 mm	24 mm	3 mm	3 mm

Note

The Borderless feature is not available for envelopes.

Acceptable paper and other print media

The print quality can be affected by the type of paper you use in the machine.

To get the best print quality for the settings you have chosen, always set the Paper Type to match the type of paper you load.

You can use plain paper, inkjet paper (coated paper), glossy paper, transparencies and envelopes.

We recommend testing various paper types before buying large quantities.

For best results, use the Brother paper.

- When you print on inkjet paper (coated paper), transparencies and glossy paper, be sure to choose the correct print media in the '**Basic**' tab of the printer driver or in the Paper Type setting of the menu.
- When you print on Brother Photo paper, load one extra sheets of the same photo paper in the paper tray. An extra sheet has been included in the paper package for this purpose.
- When you use transparencies or photo paper, remove each sheet at once to prevent smudging or paper jams.
- Avoid touching the printed surface of the paper immediately after printing; the surface may not be completely dry and may stain your fingers.

Recommended print media

To get the best print quality, we suggest using Brother paper. (See table below.)

If Brother paper is not available in your country, we recommend testing various papers before purchasing large quantities.

We recommend using '3M Transparency Film' when you print on transparencies.

Brother paper

Paper Type	Item
A4 Plain	BP60PA
A4 Glossy Photo	BP71GA4
A4 Inkjet (Matte)	BP60MA
10 x 15 cm Glossy Photo	BP71GP

Handling and using print media

- Store paper in its original packaging, and keep it sealed. Keep the paper flat and away from moisture, direct sunlight and heat.
- Avoid touching the shiny (coated) side of photo paper. Load photo paper with the shiny side facing down.
- Avoid touching either side of transparencies because they absorb water and perspiration easily, and this may cause decreased output quality. Transparencies designed for laser printers/copiers may stain your next document. Use only transparencies recommended for inkjet printing.
- You can only print on both sides of the paper with PC printing. See *Printing for Windows®* in the Software User's Guide on the CD-ROM.

Improper Setup

DO NOT use the following kinds of paper:

- Damaged, curled, wrinkled, or irregularly shaped paper

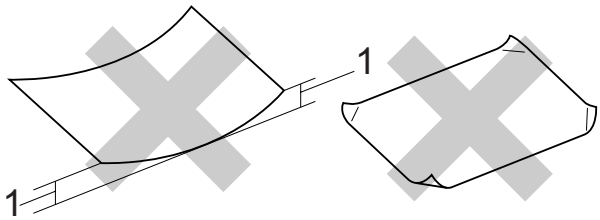

1 2 mm or greater

- Extremely shiny or highly textured paper
- Paper that cannot be arranged uniformly when stacked
- Paper made with a short grain

Paper capacity of the output paper tray

Up to 50 sheets of 20 lb Letter or 80 gsm A4 paper.

- Transparencies or photo paper must be picked up from the output paper tray one page at a time to avoid smudging.

Choosing the right print media

Paper type and size for each operation

Paper Type	Paper Size		Usage		
			Copy	Photo Capture	Printer
Cut Sheet	Letter	216 × 279 mm	Yes	Yes	Yes
	A4	210 × 297 mm	Yes	Yes	Yes
	Legal	216 × 356 mm	Yes	–	Yes
	Executive	184 × 267 mm	–	–	Yes
	JIS B5	182 × 257 mm	–	–	Yes
	A5	148 × 210 mm	Yes	–	Yes
	A6	105 × 148 mm	–	–	Yes
Cards	Photo	10 × 15 cm	Yes	Yes	Yes
	Photo 2L	13 × 18 cm	–	Yes	Yes
	Index Card	127 × 203 mm	–	–	Yes
	Post Card 1	100 × 148 mm	–	–	Yes
	Post Card 2 (Double)	148 × 200 mm	–	–	Yes
Envelopes	C5 Envelope	162 × 229 mm	–	–	Yes
	DL Envelope	110 × 220 mm	–	–	Yes
	COM-10	105 × 241 mm	–	–	Yes
	Monarch	98 × 191 mm	–	–	Yes
	JE4 Envelope	105 × 235 mm	–	–	Yes
Transparencies	Letter	216 × 279 mm	Yes	–	Yes
	A4	210 × 297 mm	Yes	–	Yes

Paper weight, thickness and capacity

Paper Type		Weight	Thickness	No. of sheets
Cut Sheet	Plain Paper	64 to 120 gsm	0.08 to 0.15 mm	100 [1]
	Inkjet Paper	64 to 200 gsm	0.08 to 0.25 mm	20
	Glossy Paper	Up to 220 gsm	Up to 0.25 mm	20
Cards	Photo Card	Up to 220 gsm	Up to 0.25 mm	20
	Index Card	Up to 120 gsm	Up to 0.15 mm	30
	Post Card	Up to 200 gsm	Up to 0.25 mm	30
Envelopes		75 to 95 gsm	Up to 0.52 mm	10
Transparencies		–	–	10

[1] Up to 100 sheets of 80 g/m^2 paper.

Loading documents

You can make copies and scan from the ADF (automatic document feeder) (DCP-185C only) and from the scanner glass.

Using the ADF (DCP-185C only)

The ADF can hold up to 15 pages and feeds each sheet individually. Use standard 80 gsm paper and always fan the pages before putting them in the ADF.

Recommended environment

Temperature:	20 to 30° C
Humidity:	50% to 70%
Paper:	80 gsm

Document Sizes Supported

Length:	148 to 355.6 mm
Width:	148 to 215.9 mm
Weight:	64 to 90 gsm

How to load documents

CAUTION

DO NOT pull on the document while it is feeding.

DO NOT use paper that is curled, wrinkled, folded, ripped, stapled, paper clipped, pasted or taped.

DO NOT use cardboard, newspaper or fabric with the ADF. Instead use the scanner glass.

- Make sure documents written with ink are completely dry.

1. Unfold the ADF Document Output Support Flap (1).
2. Fan the pages well. Make sure you put the documents **face down, top edge first** in the ADF until you feel them touch the feed roller.
3. Adjust the paper guides (2) to fit the width of your documents.

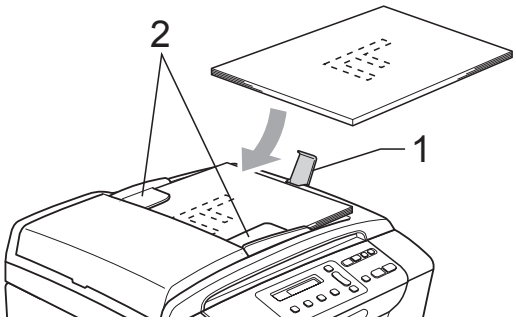

CAUTION

DO NOT leave thick documents on the scanner glass. If you do this, the ADF may jam.

Using the scanner glass

You can use the scanner glass to copy or scan pages of a book one page at a time.

Document Sizes Supported

Length:	Up to 297 mm
Width:	Up to 215.9 mm
Weight:	Up to 2 kg

How to load documents

Note

(DCP-185C) To use the scanner glass, the ADF must be empty.

1. Lift the document cover.
2. Using the document guidelines on the left and top, place the document face down in the upper left corner of the scanner glass.

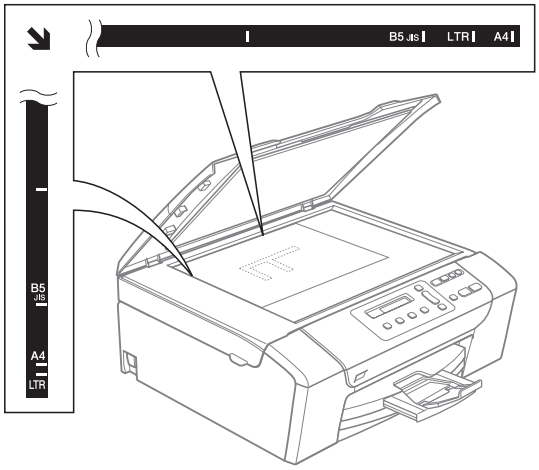

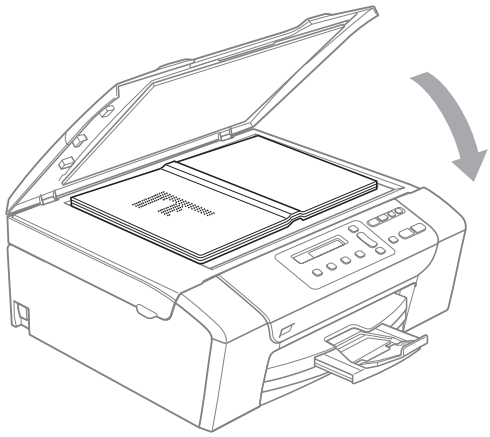

3. Close the document cover.

CAUTION

If you are scanning a book or thick document, DO NOT slam the cover or press on it.

Scannable area

The scannable area depends on the settings in the application you are using. The figures below show the areas you cannot scan on Letter and A4 paper.

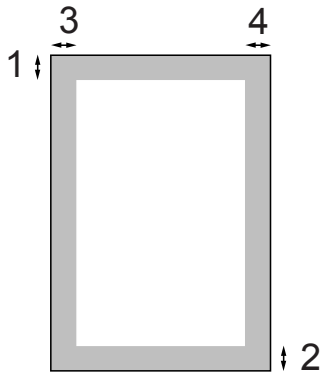

Usage	Document Size	Top (1) Bottom (2)	Left (3) Right (4)
Copy	All paper sizes	3 mm	3 mm
Scan	All paper sizes	3 mm	3 mm

3 General Setup

LCD screen

Changing LCD language

You can change the LCD language.

1. Press **Menu**.
2. Press ▲ or ▼ to choose `0.Initial Setup`.
   Press **OK**.
3. Press ▲ or ▼ to choose `0.Local Language`.
   Press **OK**.
4. Press ▲ or ▼ to choose your language.
   Press **OK**.
5. Press **Stop/Exit**.

Improving the LCD angle

You can adjust the LCD contrast for a sharper and more vivid display. If you are having difficulty reading the LCD, try changing the contrast setting.

1. Press **Menu**.
2. Press ▲ or ▼ to choose `0.Initial Setup`.
   Press **OK**.
3. Press ▲ or ▼ to choose `2.LCD Contrast`.
   Press **OK**.
4. Press ▲ or ▼ to choose `Light` or `Dark`.
   Press **OK**.
5. Press **Stop/Exit**.

Sleep Mode

You can choose how long the machine must be idle (from 1 to 60 minutes) before it goes into sleep mode. The timer will restart if any operation is carried out on the machine.

1. Press **Menu**.
2. Press ▲ or ▼ to choose `0.Initial Setup`.
   Press **OK**.
3. Press ▲ or ▼ to choose `3.Sleep Mode`.
   Press **OK**.
4. Press ▲ or ▼ to choose `1 Min`, `2 Mins`, `3 Mins`, `5 Mins`, `10 Mins`, `30 Mins` or `60 Mins` which is the length of time the machine is idle before entering sleep mode.
   Press **OK**.
5. Press **Stop/Exit**.

Printing Reports

The following reports are available:

- `Help List`

  A help list showing how to program your machine.

- `User Settings`

  Lists your settings.

How to print a report

1. Press **Menu**.
2. Press ▲ or ▼ to choose `3.Print Reports`.
   Press **OK**.
3. Press ▲ or ▼ to choose the report you want.
   Press **OK**.
4. Press **Mono Start**.
5. Press **Stop/Exit**.

Section II

Copy

Making copies 22

4 Making copies

How to copy

You can use your machine as a copier, making up to 99 copies at a time.

Making a single copy

1. Load your document.
   (See *Loading documents* on page 17.)
2. Press **Mono Start** for B&W copy or **Colour Start** for colour copy.

Making multiple copies

You can make up to 99 copies in one print run.

1. Load your document.
   (See *Loading documents* on page 17.)
2. Press **Number of Copies** repeatedly until the number of copies you want appears (up to 99).
   Or press ▲ or ▼ to change the number of copies.
3. Press **Mono Start** for B&W copy or **Colour Start** for colour copy.

Note

(DCP-185C) To sort your copies, press the **Copy Options** key.

Stop copying

To stop copying, press **Stop/Exit**.

Copy options

When you want to quickly change the copy settings temporarily for the next multiple copies, use the temporary Copy keys. You can use different combinations.

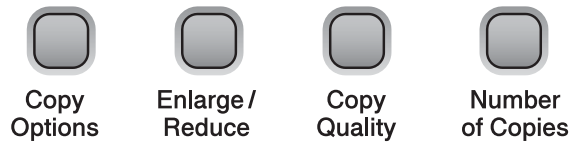

The machine returns to its default settings 1 minute after it finishes copying.

Note

You can save the copy settings you use most often by setting them as default. You can find instructions on how to do this in the section for each feature.

Changing copy speed and quality

You can select from a range of quality settings. The default setting is Normal.

To *temporarily* change the quality setting, follow the instructions below:

Press	Normal	Normal is the recommended mode for ordinary print outs. This produces good copy quality with good copy speed.
	Fast	Fast copy speed and lowest ink consumption. Use to save time printing documents to be proof-read, large documents or many copies.
	Best	Use best mode to copy precise images such as photographs. This provides the highest resolution and the slowest speed.

1. Load your document.
2. Press **Copy Quality** repeatedly to choose Fast, Normal or Best.
3. Press **Mono Start** or **Colour Start**.

To change the default setting, follow the instructions below:

1. Press **Menu**.
2. Press ▲ or ▼ to choose 1.Copy.
   Press **OK**.
3. Press ▲ or ▼ to choose 3.Quality.
   Press **OK**.
4. Press ▲ or ▼ to choose Fast, Normal or Best.
   Press **OK**.
5. Press **Stop/Exit**.

Enlarging or reducing the image copied

You can choose an enlargement or reduction ratio. If you choose Fit to Page, your machine will adjust the size automatically to the paper size you set. (DCP-185C only) If you use this setting, use the scanner glass.

Press	Fit to Page
	Custom(25-400%)
	198% 10x15cm→A4
	186%10x15cm→LTR
	142% A5→A4
	100%
	97% LTR→A4
	93% A4→LTR
	83%(DCP-145C, DCP-165C)
	83% LGL→A4(DCP-185C)
	69% A4→A5
	47% A4→10x15cm

To enlarge or reduce the next copy follow the instructions below:

1. Load your document.
2. Press **Enlarge/Reduce**.
3. Do one of the following:
   - Press ▲ or ▼ to choose the enlargement or reduction ratio you want. Press **OK**.
   - Press ▲ or ▼ to choose `Custom(25-400%)`. Press **OK**. Press ▲ or ▼ repeatedly to enter an enlargement or reduction ratio from `25%` to `400%`. Press **OK**.
   - Press ▲ or ▼ to choose `100%` or `Fit to Page`. Press **OK**.
4. Press **Mono Start** or **Colour Start**.

Note

- Page Layout Options are *not* available with **Enlarge/Reduce**.
- `Fit to Page` options are not available with `Page Layout`.
- `Fit to Page` does not work properly when the document on the scanner glass is skewed more than 3 degrees. Using the document guidelines on the left and top, place your document in the upper left hand corner, with the document face down on the scanner glass.
- `Fit to Page` is not available for a Legal size document.

Making N in 1 copies or a poster (Page Layout)

The N in 1 copy feature can help you save paper by letting you copy two or four pages onto one printed page.

You can also produce a poster. When you use the poster feature your machine divides your document into sections, then enlarges the sections so you can assemble them into a poster. (DCP-185C only) If you want to print a poster, use the scanner glass.

Important

- Make sure paper size is set to `Letter` or `A4`.
- You cannot use the Enlarge/Reduce and stack/sort settings (DCP-185C only) with the N in 1 and Poster features.
- N in 1 colour copies are not available.
- (`P`) means Portrait and (`L`) means Landscape.
- You can only make one poster copy at a time.

Press and then ▲ or ▼ to choose `Page Layout`	`Off(1 in 1)`
	`2 in 1 (P)`
	`2 in 1 (L)`
	`4 in 1 (P)`
	`4 in 1 (L)`
	`Poster(3 x 3)`

1. Load your document.
2. Press **Copy Options** and ▲ or ▼ to choose `Page Layout`. Press **OK**.
3. Press ▲ or ▼ to choose `2 in 1 (P)`, `2 in 1 (L)`, `4 in 1 (P)`, `4 in 1 (L)`, `Poster(3 x 3)` or `Off(1 in 1)`. Press **OK**.
4. Press **Mono Start** to scan the document. You can also press **Colour Start** if you are using the Poster layout. If you placed the document in the ADF or are making a poster, the machine scans the pages and starts printing. **If you are using the scanner glass, go to ❺.**
5. After the machine scans the page, press ▲ (`Yes`) to scan the next page.

```
Next Page?
```

```
▲ Yes ▼ No
```

6 Place the next page on the scanner glass. Press **OK**.
Repeat ❺ and ❻ for each page of the layout.

```
Set Next Page
```

```
Then Press OK
```

7 After all the pages have been scanned, press ▼ (No) to finish.

Note

If any glossy paper is selected as the paper type setting for N in 1 copies, the images will be printed as if plain paper had been selected.

If you are copying from the scanner glass, place your document face down in the direction shown below:

■ **2 in 1 (P)**

■ **2 in 1 (L)**

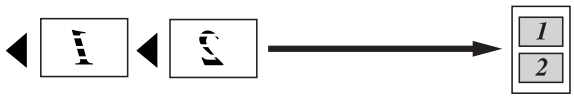

■ **4 in 1 (P)**

■ **4 in 1 (L)**

■ **Poster (3×3)**

You can make a poster size copy of a photograph.

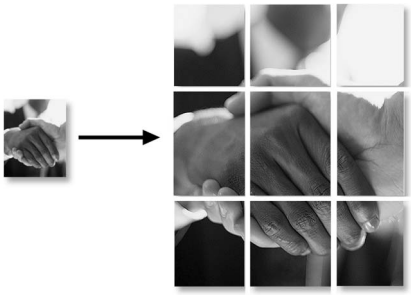

Sorting copies using the ADF (Monochrome only) (DCP-185C only)

You can sort multiple copies. Pages will be sorted in the order 1 2 3, 1 2 3, 1 2 3, and so on.

1 Load your document.

2 Press **Number of Copies** repeatedly until the number of copies you want appears.
Or press ▲ or ▼ to change the number of copies.

3 Press **Copy Options** and ▲ or ▼ to choose Stack/Sort.
Press **OK**.

4 Press ▲ or ▼ to choose Sort.
Press **OK**.

5 Press **Mono Start**.

Note

Page Layout is not available with Sort.

4

Adjusting Brightness and Contrast

Brightness

To temporarily change the brightness setting, follow the instruction below:

Press and then ▲ or ▼ to choose `Brightness`	–□□■□□+

1. Load your document.
2. Press **Copy Options** and ▲ or ▼ to choose `Brightness`.
   Press **OK**.

   –□□■□□+ ▲▼

3. Press ▲ or ▼ to make a lighter or darker copy.
   Press **OK**.
4. Press **Mono Start** or **Colour Start**.

To change the default setting follow the instructions below:

1. Press **Menu**.
2. Press ▲ or ▼ to choose `1.Copy`.
   Press **OK**.
3. Press ▲ or ▼ to choose `4.Brightness`.
   Press **OK**.
4. Press ▲ or ▼ to make a lighter or darker copy.
   Press **OK**.
5. Press **Stop/Exit**.

Contrast

Adjust the contrast to help an image look sharper and more vivid.

1. Press **Menu**.
2. Press ▲ or ▼ to choose `1.Copy`.
   Press **OK**.
3. Press ▲ or ▼ to choose `5.Contrast`.
   Press **OK**.
4. Press ▲ or ▼ to increase or decrease the contrast.
   Press **OK**.
5. Press **Stop/Exit**.

Paper options

Paper Type

If you are copying on special paper, be sure to select the type of paper you are using so you will get the best print quality.

Press	
Copy Options and then ▲ or ▼ to choose `Paper Type`	`Plain Paper`
	`Inkjet Paper`
	`Brother BP71`
	`Other Glossy`
	`Transparency`

1. Load your document.
2. Press **Copy Options** and ▲ or ▼ to choose `Paper Type`.
   Press **OK**.
3. Press ▲ or ▼ to choose the type of paper you are using.
   Press **OK**.
4. Press **Mono Start** or **Colour Start**.

To change the default setting, follow the instructions below:

1. Press **Menu**.
2. Press ▲ or ▼ to choose `1.Copy`.
   Press **OK**.
3. Press ▲ or ▼ to choose `1.Paper Type`.
   Press **OK**.
4. Press ▲ or ▼ to choose `Plain Paper`, `Inkjet Paper`, `Brother BP71`, `Other Glossy` or `Transparency`.
   Press **OK**.
5. Press **Stop/Exit**.

Paper Size

If copying on paper other than A4 size, you will need to change the paper size setting. You can copy on Letter, Legal, A4, A5 or Photo 10 × 15 cm paper.

Press	
Copy Options and then ▲ or ▼ to choose `Paper Size`	`Letter`
	`Legal`
	`A4`
	`A5`
	`10(W) x 15(H)cm`

1. Load your document.
2. Press **Copy Options** and ▲ or ▼ to choose `Paper Size`.
   Press **OK**.
3. Press ▲ or ▼ to choose the size of paper you are using.
   Press **OK**.
4. Press **Mono Start** or **Colour Start**.

To change the default setting, follow the instructions below:

1. Press **Menu**.
2. Press ▲ or ▼ to choose `1.Copy`.
   Press **OK**.
3. Press ▲ or ▼ to choose `2.Paper Size`.
   Press **OK**.
4. Press ▲ or ▼ to choose the paper size you are using, `Letter`, `Legal`, `A4`, `A5` or `10x15cm`.
   Press **OK**.
5. Press **Stop/Exit**.

Section III

Direct Photo Printing

Printing photos from a memory card or USB Flash memory drive 30

Printing photos from a camera 42

5 Printing photos from a memory card or USB Flash memory drive

PhotoCapture Center™ Operations

Note

The DCP-145C only supports USB Flash memory drives.

Printing from a memory card or USB Flash memory drive without a PC

Even if your machine is not connected to your computer, you can print photos directly from digital camera media or a USB Flash memory drive. (See *How to print from a memory card or USB Flash memory drive* on page 33.)

Scanning to a memory card or USB Flash memory drive without a PC

You can scan documents and save them directly to a memory card or USB Flash memory drive. (See *Scan to a memory card or USB Flash memory drive* on page 40.)

Using PhotoCapture Center™ from your computer

You can access a memory card or USB Flash memory drive that is inserted in the front of the machine from your computer.

(See *PhotoCapture Center*™ for Windows® or *PhotoCapture Center*™ for Macintosh® in the Software User's Guide on the CD-ROM.)

Using memory card or USB Flash memory drive

Your Brother machine has media drives (slots) for use with the following popular digital camera media: Memory Stick®, Memory Stick Pro™, SD, SDHC and xD-Picture Card™ and USB Flash memory drives.

Memory Stick®

Memory Stick Pro™

SD, SDHC

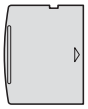

xD-Picture Card™

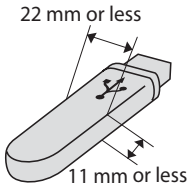

USB Flash memory drive

- miniSD™ can be used with a miniSD™ adapter.
- microSD™ can be used with a microSD™ adapter.
- Memory Stick Duo™ can be used with a Memory Stick Duo™ adapter.
- Memory Stick Pro Duo™ can be used with a Memory Stick Pro Duo™ adapter.
- Memory Stick Micro(M2) can be used with a Memory Stick Micro(M2) adapter.
- Adapters are not included with the machine. Contact a third party supplier for adapters.

The PhotoCapture Center™ feature lets you print digital photos from your digital camera at high resolution to get photo quality printing.

Memory cards (DCP-165C and DCP-185C only) or USB Flash memory drive folder structure

Your machine is designed to be compatible with modern digital camera image files, USB Flash memory drive or memory cards; however, please read the points below to avoid errors:

- The image file extension must be .JPG (Other image file extensions like .JPEG, .TIF, .GIF and so on will not be recognized).
- PhotoCapture Center™ printing without using a PC must be performed separately from PhotoCapture Center™ operations using the PC. (Simultaneous operation is not available.)
- IBM Microdrive™ is not compatible with the machine.
- The machine can read up to 999 files on a memory card.
- This product supports xD-Picture Card™ includes Type M / Type M^{+} / Type H (Large Capacity).
- The DPOF file on the memory cards must be in a valid DPOF format. (See *DPOF printing* on page 35.)

Please be aware of the following:

- When printing the Print Index or Print Images, the PhotoCapture Center™ will print all valid images, even if one or more images have been corrupted. Corrupted image will not be printed.
- (Memory card users)

  Your machine is designed to read memory cards that have been formatted by a digital camera.

  When a digital camera formats a memory card it creates a special folder into which it copies image data. If you need to modify the image data stored on a memory card with your PC, we recommend that you do not modify the folder structure created by the digital camera. When saving new or modified image files to the memory card we also recommend you use the same folder your digital camera uses. If the data is not saved to the same folder, the machine may not be able to read the file or print the image.
- (USB Flash memory drive users)

  This machine supports USB Flash memory drives that have been formatted by Windows®.

Getting started

Firmly put a memory card or USB Flash memory drive into the correct slot.

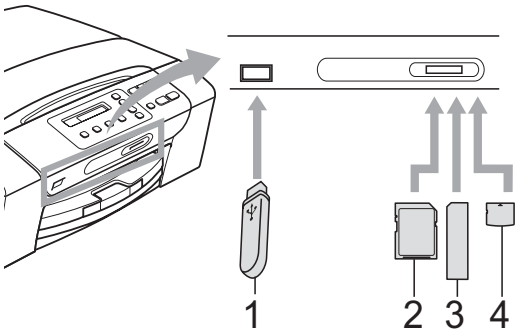

1 **USB Flash memory drive**

2 **SD, SDHC**

3 **Memory Stick®, Memory Stick Pro™**

4 **xD-Picture Card™**

CAUTION

The USB direct interface supports only a USB Flash memory drive, a PictBridge compatible camera, or a digital camera that uses the USB mass storage standard. Any other USB devices are not supported.

Photo Capture key indications:

- **Photo Capture** light is on, the memory card or USB Flash memory drive is correctly inserted.
- **Photo Capture** light is off, the memory card or USB Flash memory drive is not correctly inserted.
- **Photo Capture** light is blinking, the memory card or USB Flash memory drive is being read or written to.

CAUTION

DO NOT unplug the power cord or remove the memory card or USB Flash memory drive from the media drive (slot) or USB direct interface while the machine is reading or writing to the memory card or USB Flash memory drive (the **Photo Capture** key is blinking). **You will lose your data or damage the card.**

The machine can only read one device at a time.

How to print from a memory card or USB Flash memory drive

Before printing a photo you must first print a thumbnail index to choose the number of the photo you want to print. Follow the instructions below to start printing directly from your memory card or USB Flash memory drive:

1. Make sure you have put the memory card or USB Flash memory drive in the correct slot. The LCD will show the following message:

   `M.Stick Active`

   `Press PhotoCa...`

2. Press **Photo Capture**. For DPOF printing, see *DPOF printing* on page 35.

3. Press ▲ or ▼ to choose `Print Index` and then press **OK**.

4. Press **Colour Start** to start printing the index sheet. Make a note of the image number you want to print. See *Print Index (Thumbnails)* on page 33.

5. To print images press ▲ or ▼ to choose `Print Images` in ❸ and then press **OK**. (See *Printing Images* on page 34.)

6. Enter the image number and press **OK**.

7. Press **Colour Start** to start printing.

Print Index (Thumbnails)

The PhotoCapture Center™ assigns numbers for images (such as No.1, No.2, No.3, and so on).

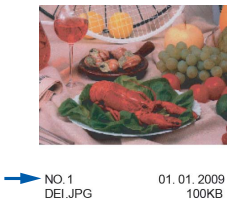

The PhotoCapture Center™ uses these numbers to identify each picture. You can print a thumbnail page to show all the pictures on the memory card or USB Flash memory drive.

Note

Only file names that are 8 characters or less will be printed correctly on the index sheet.

1. Make sure you have put the memory card or USB Flash memory drive in the correct slot.

   Press (**Photo Capture**).

2. Press ▲ or ▼ to choose `Print Index`. Press **OK**.

3. Press ▲ or ▼ to choose `6 Images/Line` or `5 Images/Line`. Press **OK**.

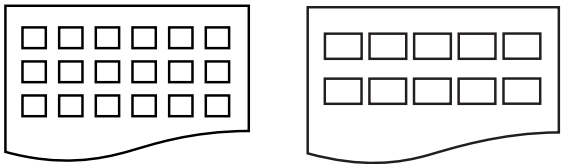

`6 Images/Line` `5 Images/Line`

Print time for 5 Images/Line will be slower than 6 Images/Line, but the quality is better.

4 Press ▲ or ▼ to choose the type of paper you are using, `Plain Paper`, `Inkjet Paper`, `Brother BP71` or `Other Glossy`.
Press **OK**.

5 Press ▲ or ▼ to choose the paper size you are using, `A4` or `Letter`.
Press **OK**.

6 Press **Colour Start** to print.

Printing Images

Before you can print an individual image, you have to know the image number.

1 Make sure you have put the memory card or USB Flash memory drive in the correct slot.

2 Print the index first. (See *Print Index (Thumbnails)* on page 33.)
Press (**Photo Capture**).

3 Press ▲ or ▼ to choose `Print Images`.
Press **OK**.

Note

If your memory card or USB Flash memory drive contains valid DPOF information, the LCD will show `DPOF Print:Yes`, see *DPOF printing* on page 35.

4 Press ▲ repeatedly to enter the image number that you want to print from the thumbnail index.
After you have chosen the image numbers, press **OK**.

```
No.:1,3,6
```

Note

- Press ▼ to decrease the image number.
- You can enter a range of numbers at one time by using the **Copy Options** key for a hyphen. (For example, enter **1**, **Copy Options**, **5** to print images No.1 to No.5).
- You can enter up to 12 characters (including commas) for the image numbers you want to print.

5 After you have selected the images you want to print, press **OK** to select your settings.
If you have already chosen your settings, press **Colour Start**.

6 Press ▲ or ▼ to choose the type of paper you are using, `Plain Paper`, `Inkjet Paper`, `Brother BP71` or `Other Glossy`.
Press **OK**.

7 Press ▲ or ▼ to choose the paper size you are using, `Letter`, `A4`, `10 x 15cm` or `13 x 18cm`.
Press **OK**.

- If you selected Letter or A4, go to ❽.
- If you selected another size, go to ❾.
- If you have finished choosing settings, press **Colour Start**.

8 Press ▲ or ▼ to choose the print size (`8 x 10cm`, `9 x 13cm`, `10 x 15cm`, `13 x 18cm`, `15 x 20cm` or `Max. Size`).
Press **OK**.

9 Do one of the following:

- To choose the number of copies go to ❿.
- If you have finished choosing settings, press **Colour Start**.

10 Press ▲ or ▼ to enter the number of copies you want. Press **OK**.

11 Press **Colour Start** to print.

The printing positions when using A4 paper are shown below.

1 8 x 10cm	2 9 x 13cm	3 10 x 15cm
4 13 x 18cm	5 15 x 20cm	6 Max. Size

DPOF printing

DPOF stands for Digital Print Order Format.

Major digital camera manufacturers (Canon Inc., Eastman Kodak Company, Fuji Photo Film Co. Ltd., Matsushita Electric Industrial Co. Ltd. and Sony Corporation) created this standard to make it easier to print images from a digital camera.

If your digital camera supports DPOF printing, you will be able to choose on the digital camera display the images and number of copies you want to print.

When a memory card containing DPOF information is put into your machine, you can print the chosen image easily.

1. Firmly insert the memory card into the correct slot.

   M.Stick Active

   Press (**Photo Capture**).

   The DPOF file on the memory card must be in a valid DPOF format.

2. Press ▲ or ▼ to choose Print Images. Press **OK**.

3. If there is a DPOF file on the card, the LCD will show:

   DPOF Print:Yes

4. Press ▲ or ▼ to choose DPOF Print:Yes. Press **OK**.

5. Press ▲ or ▼ to choose the type of paper you are using, Plain Paper, Inkjet Paper, Brother BP71 or Other Glossy.
   Press **OK**.

6. Press ▲ or ▼ to choose the paper size you are using, Letter, A4, 10 x 15cm or 13 x 18cm.
   Press **OK**.
   - If you selected Letter or A4, go to ❼.
   - If you selected another size, go to ❽.
   - If you have finished choosing settings, press **Colour Start**.

7. Press ▲ or ▼ to choose the print size (8 x 10cm, 9 x 13cm, 10 x 15cm, 13 x 18cm, 15 x 20cm or Max. Size).
   Press **OK**.

8. Press **Colour Start** to print.

Note

An DPOF File error can occur if the print order that was created on the camera has been corrupted. Delete and recreate the print order using your camera to correct this problem. For instructions on how to delete or recreate the print order, refer to your camera manufacture's support website or accompanying documentation.

PhotoCapture Center™ print settings

These settings will remain until you change them again.

Print quality

1. Press **Menu**.
2. Press ▲ or ▼ to choose `2.PhotoCapture`.
   Press **OK**.
3. Press ▲ or ▼ to choose `1.Print Quality`.
   Press **OK**.
4. Press ▲ or ▼ to choose `Normal` or `Photo`.
   Press **OK**.
5. Press **Stop/Exit**.

Paper Options

Paper Type

1. Press **Menu**.
2. Press ▲ or ▼ to choose `2.PhotoCapture`.
   Press **OK**.
3. Press ▲ or ▼ to choose `2.Paper Type`.
   Press **OK**.
4. Press ▲ or ▼ to choose `Plain Paper`, `Inkjet Paper`, `Brother BP71` or `Other Glossy`.
   Press **OK**.
5. Press **Stop/Exit**.

Paper Size

1. Press **Menu**.
2. Press ▲ or ▼ to choose `2.PhotoCapture`.
   Press **OK**.
3. Press ▲ or ▼ to choose `3.Paper Size`.
   Press **OK**.
4. Press ▲ or ▼ to choose the paper size you are using, `Letter`, `A4`, `10 x 15cm` or `13 x 18cm`.
   Press **OK**.
5. Press **Stop/Exit**.

Print Size

This setting is available only when you select Letter or A4 in the paper size setting.

1. Press **Menu**.
2. Press ▲ or ▼ to choose `2.PhotoCapture`.
   Press **OK**.
3. Press ▲ or ▼ to choose `4.Print Size`.
   Press **OK**.
4. Press ▲ or ▼ to choose the print size you are using, (`8 x 10cm`, `9 x 13cm`, `10 x 15cm`, `13 x 18cm`, `15 x 20cm` or `Max. Size`).
   Press **OK**.
5. Press **Stop/Exit**.

Colour Enhancement

You can turn on the colour enhancement feature to print more vivid images.

Brightness

1. Press **Menu**.
2. Press ▲ or ▼ to choose `2.PhotoCapture`.
   Press **OK**.
3. Press ▲ or ▼ to choose `5.Color Enhance`.
   Press **OK**.
4. Press ▲ or ▼ to choose `On` (or `Off`).
   Press **OK**.
   - If you choose `Off`, then go to ❼.
5. Press ▲ or ▼ to choose `1.Brightness`.
   Press **OK**.
6. Press ▲ or ▼ to make a lighter or darker print.
   Press **OK**.
7. Press **Stop/Exit**.

Contrast

You can select the contrast setting. More contrast will make an image look sharper and more vivid.

1. Press **Menu**.
2. Press ▲ or ▼ to choose `2.PhotoCapture`.
   Press **OK**.
3. Press ▲ or ▼ to choose `5.Color Enhance`.
   Press **OK**.
4. Press ▲ or ▼ to choose `On` (or `Off`).
   Press **OK**.
   - If you choose `Off`, then go to ❼.
5. Press ▲ or ▼ to choose `2.Contrast`.
   Press **OK**.
6. Press ▲ or ▼ to increase or decrease the contrast.
   Press **OK**.
7. Press **Stop/Exit**.

White Balance

You can adjust the white areas of an image and bring them back to pure white.

1. Press **Menu**.
2. Press ▲ or ▼ to choose `2.PhotoCapture`.
   Press **OK**.
3. Press ▲ or ▼ to choose `5.Color Enhance`.
   Press **OK**.
4. Press ▲ or ▼ to choose `On` (or `Off`).
   Press **OK**.
   - If you choose `Off`, then go to ❼.
5. Press ▲ or ▼ to choose `3.White Balance`.
   Press **OK**.
6. Press ▲ or ▼ to adjust the degree of the balance.
   Press **OK**.
7. Press **Stop/Exit**.

Sharpness

You can enhance the focus of an image by adjusting the sharpness.

1. Press **Menu**.
2. Press ▲ or ▼ to choose `2.PhotoCapture`.
   Press **OK**.
3. Press ▲ or ▼ to choose `5.Color Enhance`.
   Press **OK**.
4. Press ▲ or ▼ to choose `On` (or `Off`).
   Press **OK**.
   - If you choose `Off`, then go to ❼.
5. Press ▲ or ▼ to choose `4.Sharpness`.
   Press **OK**.
6. Press ▲ or ▼ to increase or decrease the sharpness.
   Press **OK**.
7. Press **Stop/Exit**.

Colour Density

You can adjust the total amount of colour in the image to improve a washed out or weak picture.

1. Press **Menu**.
2. Press ▲ or ▼ to choose `2.PhotoCapture`.
   Press **OK**.
3. Press ▲ or ▼ to choose `5.Color Enhance`.
   Press **OK**.
4. Press ▲ or ▼ to choose `On` (or `Off`).
   Press **OK**.
   - If you choose `Off`, then go to ❼.
5. Press ▲ or ▼ to choose `5.Color Density`.
   Press **OK**.
6. Press ▲ or ▼ to increase or decrease the amount of colour.
   Press **OK**.
7. Press **Stop/Exit**.

Note

Choosing White Balance, Sharpness, or Colour Density will make printing time slower.

Cropping

If your photo is too long or wide to fit the available space on your chosen layout, part of the image will be automatically cropped.

The default setting is `On`. If you want to print the whole image, turn this setting to `Off`.

1. Press **Menu**.
2. Press ▲ or ▼ to choose `2.PhotoCapture`. Press **OK**.
3. Press ▲ or ▼ to choose `6.Cropping`. Press **OK**.
4. Press ▲ or ▼ to choose `Off` (or `On`). Press **OK**.
5. Press **Stop/Exit**.

Cropping: On

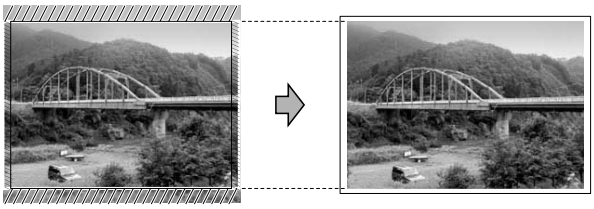

Cropping: Off

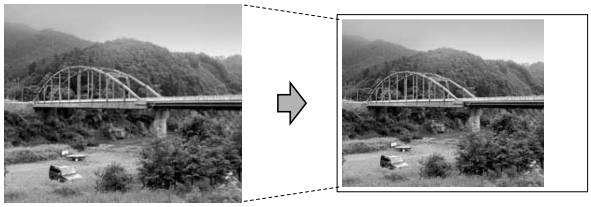

Borderless printing

This feature expands the printable area to the edges of the paper. Printing time will be slightly slower.

1. Press **Menu**.
2. Press ▲ or ▼ to choose `2.PhotoCapture`. Press **OK**.
3. Press ▲ or ▼ to choose `7.Borderless`. Press **OK**.
4. Press ▲ or ▼ to choose `Off` (or `On`). Press **OK**.
5. Press **Stop/Exit**.

Date Print

You can print the date if it is already in the data on your photo. The date will be printed on the lower right corner. If the data doesn't have the date information, you cannot use this function.

1. Press **Menu**.
2. Press ▲ or ▼ to choose `2.PhotoCapture`. Press **OK**.
3. Press ▲ or ▼ to choose `8.Date Print`. Press **OK**.
4. Press ▲ or ▼ to choose `On` (or `Off`). Press **OK**.
5. Press **Stop/Exit**.

Note

The DPOF setting on your camera must be turned off to use the `Date Print` feature.

Scan to a memory card or USB Flash memory drive

You can scan monochrome and colour documents into a memory card or USB Flash memory drive. Monochrome documents will be stored in PDF (*.PDF) or TIFF file formats (*.TIF). Colour documents may be stored in PDF (*.PDF) or JPEG (*.JPG) file formats. The default setting is `Color 150 dpi` and the default file format is PDF. The machine automatically creates file names based on the current date. (For details, see the Quick Setup Guide.) For example, the fifth image scanned on July 1, 2009 would be named 01070905.PDF. You can change the colour and quality.

Quality	Selectable File Format
`Color 150 dpi`	`JPEG / PDF`
`Color 300 dpi`	`JPEG / PDF`
`Color 600 dpi`	`JPEG / PDF`
`B/W 200x100 dpi`	`TIFF / PDF`
`B/W 200 dpi`	`TIFF / PDF`

1. Insert a Memory Stick®, Memory Stick Pro™, SD, SDHC, xD-Picture Card™ or USB Flash memory drive into your machine.

WARNING

DO NOT take out the memory card or USB Flash memory drive while **Photo Capture** is blinking to avoid damaging the card, USB Flash memory drive or data stored on the card.

2. Load your document.
3. Press (**Scan**).
4. Press ▲ or ▼ to choose `Scan to Media`, do one of the following:
   - To change the quality press **OK** and go to step ❺.
   - To start scanning press **Mono Start** or **Colour Start**.
5. Press ▲ or ▼ to choose the quality, and then press **OK**.
   Do one of the following.
   - To change the file type, go to step ❻.
   - To start scanning press **Mono Start** or **Colour Start**.
6. Press ▲ or ▼ to choose the file type and then press **OK**.
   Press **Mono Start** or **Colour Start**.

Changing the image quality

1. Press **Menu**.
2. Press ▲ or ▼ to choose `2.PhotoCapture`.
   Press **OK**.
3. Press ▲ or ▼ to choose `0.Scan to Media`.
   Press **OK**.
4. Press ▲ or ▼ to choose `1.Quality`.
   Press **OK**.
5. Press ▲ or ▼ to choose `Color 150 dpi`, `Color 300 dpi`, `Color 600 dpi`, `B/W 200x100 dpi` or `B/W 200 dpi`.
   Press **OK**.
6. Press **Stop/Exit**.

Changing the monochrome file format

1. Press **Menu**.
2. Press ▲ or ▼ to choose `2.PhotoCapture`. Press **OK**.
3. Press ▲ or ▼ to choose `0.Scan to Media`. Press **OK**.
4. Press ▲ or ▼ to choose `2.B/W File Type`. Press **OK**.
5. Press ▲ or ▼ to choose `TIFF` or `PDF`. Press **OK**.
6. Press **Stop/Exit**.

Changing the colour file format

1. Press **Menu**.
2. Press ▲ or ▼ to choose `2.PhotoCapture`. Press **OK**.
3. Press ▲ or ▼ to choose `0.Scan to Media`. Press **OK**.
4. Press ▲ or ▼ to choose `3.ColorFile Type`. Press **OK**.
5. Press ▲ or ▼ to choose `PDF` or `JPEG`. Press **OK**.
6. Press **Stop/Exit**.

Understanding the Error Messages

Once you are familiar with the types of errors that can occur while you are using PhotoCapture Center™, you can easily identify and troubleshoot any problems.

- `Hub is Unusable.`

  This message will appear if a Hub or USB Flash memory drive with a Hub has been put into the USB direct interface.

- `Media Error`

  This message will appear if you put in a memory card that is either bad or not formatted, or when there is a problem with the media drive. To clear this error, take out the memory card.

- `No File`

  This message will appear if you try to access a memory card or USB Flash memory drive in the drive (slot) that does not contain a .JPG file.

- `Out of Memory`

  This message will appear if you are working with images that are too large for the machine's memory.

  This message will also appear when a memory card or USB Flash memory drive you are using does not have enough available space to scan the documents.

- `Media is Full.`

  This message will appear if you are trying to save more than 999 files in a memory card or USB Flash memory drive.

- `Unusable Device`

  This message will appear if a USB device or USB Flash memory drive that is not supported has been connected to the USB direct interface (For more information, visit us at http://solutions.brother.com.). This message can also appear if you connect a broken device to the USB direct interface.

6 Printing photos from a camera

Printing photos directly from a PictBridge camera

Your Brother machine supports the PictBridge standard, allowing you to connect to and print photos directly from any PictBridge compatible digital camera.

If your camera is using the USB Mass Storage standard, you can also print photos from a digital camera without PictBridge. See *Printing photos directly from a digital camera (without PictBridge)* on page 44.

PictBridge requirements

To avoid errors, remember the following points:

- The machine and the digital camera must be connected using a suitable USB cable.
- The image file extension must be .JPG (other image file extensions like .JPEG, .TIF, .GIF and so on will not be recognized).
- PhotoCapture Center™ operations are not available when using the PictBridge feature.

Setting your digital camera

Make sure your camera is in PictBridge mode. Some of the settings listed below may not be available for your PictBridge compatible digital camera.

Depending on your camera some of these settings may not be available.

Camera Menu Selections	Options
Paper Size	Letter, A4, 10x15 cm, Printer Settings (Default setting) [2]
Paper Type	Plain Paper, Glossy Paper, Inkjet Paper, Printer Settings (Default setting) [2]
Layout	Borderless: On, Borderless: Off, Printer Settings (Default setting) [2]
DPOF setting [1]	-
Print Quality	Normal, Fine, Printer Settings (Default setting) [2]
Color Enhancement	On, Off, Printer Settings (Default setting) [2]
Date Print	On, Off, Printer Settings (Default setting) [2]

[1] See *DPOF printing* on page 43 for more details.

[2] If your camera is set to use the Printer Settings (Default setting), the machine will print your photo using the following settings.

Settings	Options
Paper Size	10x15 cm
Paper Type	Other Glossy
Layout	Borderless: On
Print Quality	Photo
Color Enhancement	Off
Date Print	Off

- When your camera does not have any menu selections, this setting is also used.
- The names and availability of each setting depends on the specification of your camera.

Please refer to the documentation supplied with your camera for more detailed information on changing PictBridge settings.

Printing Images

Note

Remove any memory cards or USB Flash memory drive from the machine before connecting a digital camera.

1. Make sure that your camera is turned off. Connect your camera to the USB direct interface (1) port on the machine using the USB cable.

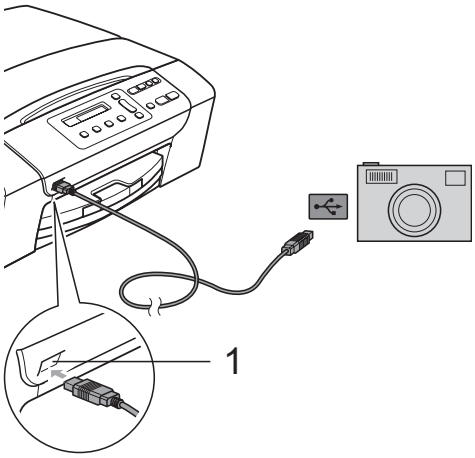

1 USB direct interface

2. Turn on the camera.
   When the machine has recognized the camera, the LCD shows the following message:

   `Camera Connected`

3. Choose the photo you want to print following the instructions from your camera.
   When the machine starts printing a photo, the LCD will show `Printing`.

WARNING

To prevent damage to your machine, do not connect any device other than a digital camera or USB Flash memory drive to the USB direct interface.

DPOF printing

DPOF stands for Digital Print Order Format.

Major digital camera manufacturers (Canon Inc., Eastman Kodak Company, Fuji Photo Film Co. Ltd., Matsushita Electric Industrial Co. Ltd. and Sony Corporation) created this standard to make it easier to print images from a digital camera.

If your digital camera supports DPOF printing, you will be able to choose on the digital camera display the images and number of copies you want to print.

Note

An DPOF File error can occur if the print order that was created on the camera has been corrupted. Delete and recreate the print order using your camera to correct this problem. For instructions on how to delete or recreate the print order, refer to your camera manufacture's support website or accompanying documentation.

Printing photos directly from a digital camera (without PictBridge)

If your camera supports the USB Mass Storage standard, you can connect your camera in storage mode. This enables you to print photos from your camera.

If you would like to print photos in PictBridge mode, see *Printing photos directly from a PictBridge camera* on page 42.

Note

The name, availability and operation differ among digital cameras. Please refer to the documentation supplied with your camera for detailed information, such as how to switch from PictBridge mode to USB mass storage mode.

Printing Images

Note

Remove any memory cards or USB Flash memory drive from the machine before connecting the digital camera.

1. Connect your camera to the USB direct interface (1) on the machine using the USB cable.

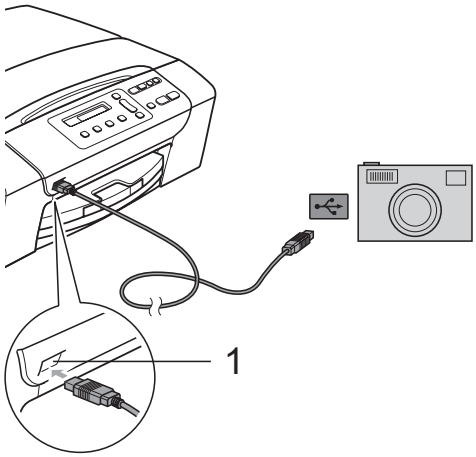

1 USB direct interface

2. Turn on the camera.
3. Follow the steps in *Printing Images* on page 34.

WARNING

To prevent damages to your machine, do not connect any device other than a digital camera or USB Flash memory drive to the USB direct interface.

Understanding the Error Messages

Once you are familiar with the types of errors that can occur while you are using PictBridge, you can easily identify and troubleshoot any problems.

- `Out of Memory`

  This message will appear if you are working with images that are too large for the machine's memory.

- `Unusable Device`

  This message will appear if you connect a camera which is not using the USB Mass storage standard. This message can also appear if you connect a broken device to the USB direct interface.

For more detailed solutions see *Error and Maintenance messages* on page 62.

Section IV

Software

Software features 48

7 Software features

The CD-ROM includes the Software User's Guide for features available when connected to a computer (for example, printing and scanning). The guide has easy to use links that, when clicked, will take you directly to a particular section.

You can find information on these features:

- Printing
- Scanning
- ControlCenter3 (for Windows®)
- ControlCenter2 (for Macintosh®)
- PhotoCapture Center™

How to read the HTML User's Guide

This is a quick reference to use the HTML User's Guide.

For Windows®

Note

If you have not installed the software, see *Viewing Documentation* on page 2.

1. From the **Start** menu, point to **Brother**, **DCP-XXXX** (where XXXX is your model number) from the programs group, then click **User's Guides in HTML format**.
2. Click **SOFTWARE USER'S GUIDE** from the Main Menu.

3. Click the heading you would like to view from the list at the left of the window.

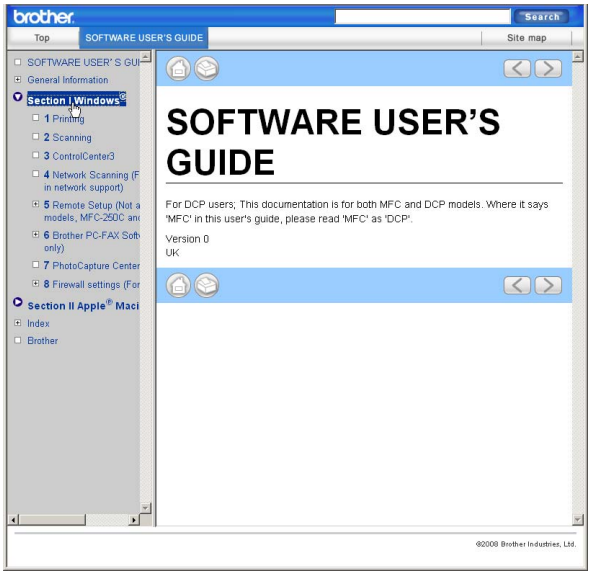

For Macintosh®

1. Make sure your Macintosh® is turned on. Insert the Brother CD-ROM into your CD-ROM drive.
2. Double-click the **Documentation** icon.
3. Double-click your language folder, and then double-click **top.html**.
4. Click **SOFTWARE USER'S GUIDE** in the top menu, and then click the heading you would like to read from the list at the left of the window.

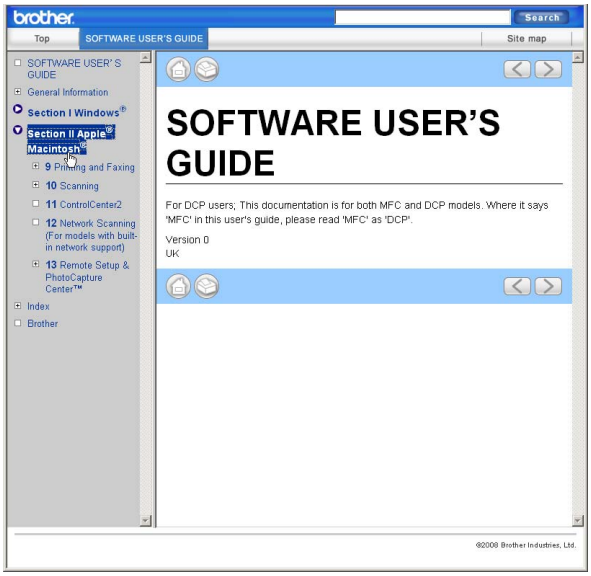

Section V

Appendixes

Safety and Legal	50
Troubleshooting and Routine Maintenance	58
Menu and Features	78
Specifications	85
Glossary	95

A Safety and Legal

Choosing a location

Put your machine on a flat, stable surface that is free of vibration and shocks, such as a desk. Put the machine near a standard, grounded electrical socket. Choose a location where the temperature remains between 10° C and 35° C.

WARNING

DO NOT put the machine near heaters, air conditioners, refrigerators, medical equipment, chemicals or water.

DO NOT connect your machine to electrical sockets on the same circuit as large appliances or other equipment that might disrupt the power supply.

CAUTION

- Avoid placing your machine in a high-traffic area.
- Avoid placing your machine on a carpet.
- DO NOT expose the machine to direct sunlight, excessive heat, moisture, or dust.
- DO NOT connect your machine to electrical sockets controlled by wall switches or automatic timers.
- Disruption of power can wipe out information in the machine's memory.
- DO NOT tip the machine, or place it on any tilted surface. Doing this may cause ink spillage and internal damage to your machine.

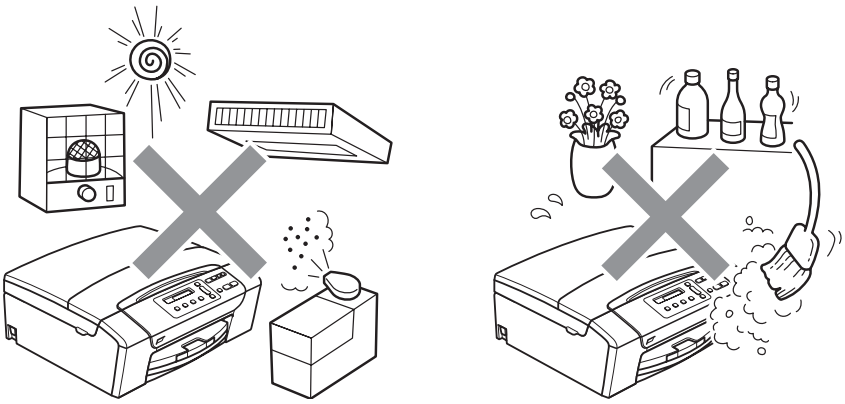

To use the machine safely

Please keep these instructions for later reference and read them before attempting any maintenance.

WARNING

There are high voltage electrodes inside the machine. Before you clean the inside of the machine, make sure you have unplugged the power cord from the electrical socket. Doing this will prevent an electrical shock.

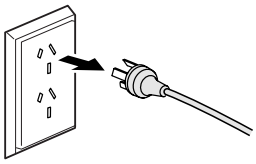

DO NOT handle the plug with wet hands. Doing this might cause an electrical shock.

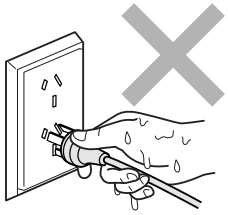

DO NOT pull in the middle of the power cord. Doing this might cause an electrical shock.

DO NOT put your hands on the edge of the machine under the scanner cover. Doing this may cause injury.

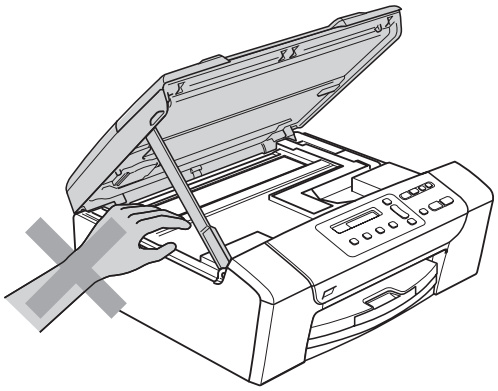

DO NOT put your hands on the edge of the paper tray under the paper tray cover. Doing this may cause injury.

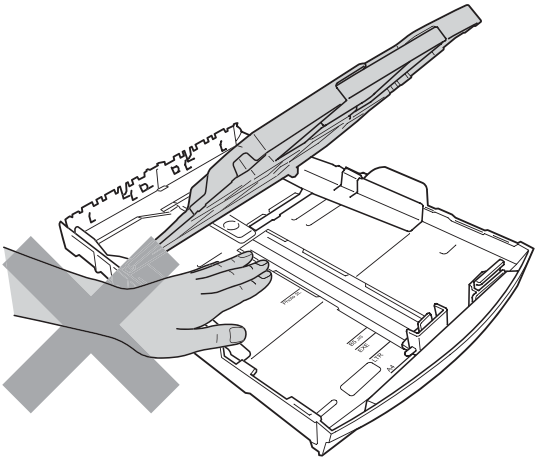

DO NOT touch the area shaded in the illustration. Doing this may cause injury.

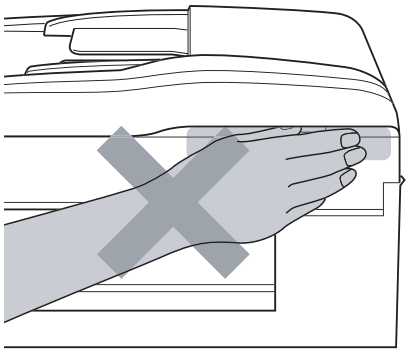

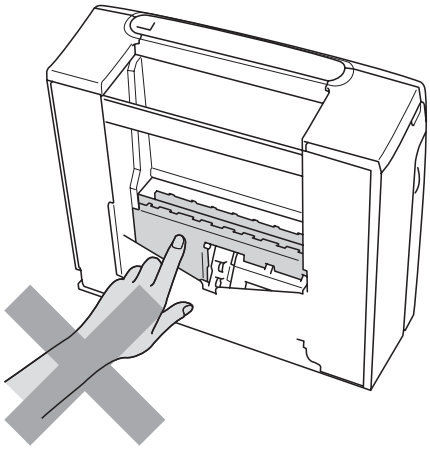

When moving the machine you must lift it from the base, by placing a hand at each side of the unit as shown in the illustration. DO NOT carry the machine by holding the scanner cover or the Jam Clear Cover.

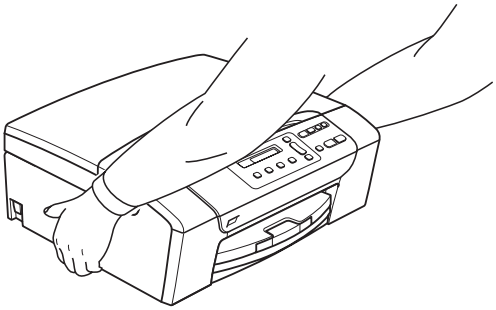

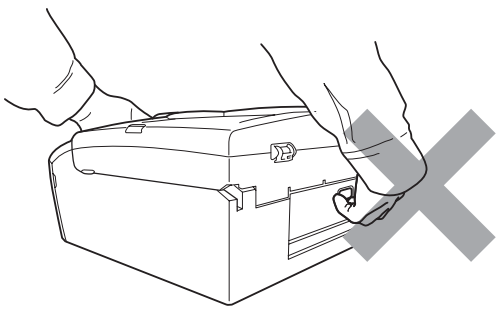

DO NOT use flammable substances, any type of spray, liquid or aerosol cleaners to clean the inside or outside of the machine. Doing this may cause a fire or electrical shock.

If the machine becomes hot, releases smoke, or generates any strong smells, immediately turn off the power switch unplug the machine from the electrical socket. Call your Brother dealer or Brother Customer Service.

If metal objects, water or other liquids get inside the machine, immediately unplug the machine from the electrical socket. Call your Brother dealer or Brother Customer Service.

This product must be installed near an electrical socket that is easily accessible. In case of an emergency, you must unplug the power cord from the electrical socket to shut off the power completely.

This product should be connected to an AC power source within the range indicated on the rating label. DO NOT connect it to a DC power source or inverter. If you are not sure, contact a qualified electrician.

Always make sure the plug is fully inserted.

DO NOT use the machine if the power cord is frayed or damaged, doing so may cause a fire.

CAUTION

Lightning and power surges can damage this product! We recommend that you use a quality surge protection device on the AC power line or unplug the cords during a lightning storm.

Important safety instructions

1 Read all of these instructions.

2 Save them for later reference.

3 Follow all warnings and instructions marked on the product.

4 DO NOT use this product near water.

5 DO NOT place this product on an unstable cart, stand, or table. The product may fall, causing serious damage to the product.

6 Slots and openings in the cabinet and the back or bottom are provided for ventilation. To ensure reliable operation of the product and to protect it from overheating, these openings must not be blocked or covered. The openings should never be blocked by placing the product on a bed, sofa, rug, or other similar surface. This product should never be placed near or over a radiator or heater. This product should never be placed in a built-in installation unless adequate ventilation is provided.

7 Use only the power cord supplied with this machine.

8 This product is equipped with a 3-wire grounded plug, a plug having a third (grounded) pin. This plug will only fit into a grounded power outlet. This is a safety feature. If you are unable to insert the plug into the outlet, call your electrician to replace your obsolete outlet. DO NOT defeat the purpose of the grounded plug.

9 DO NOT allow anything to rest on the power cord. DO NOT place this product where people can walk on the cord.

10 DO NOT place anything in front of the machine that will block printing. DO NOT place anything in the path of printing.

11 Wait until pages have exited the machine before picking them up.

12 Unplug this product from the power socket and refer all servicing to Brother Authorized Service Personnel under the following conditions:

- If liquid has been spilled into the product.
- If the product has been exposed to rain or water.
- If the product does not operate normally when the operating instructions are followed, adjust only those controls that are covered by the operating instructions.
  Incorrect adjustment of other controls may result in damage and will often require extensive work by a qualified technician to restore the product to normal operation.
- If the product has been dropped or the casing has been damaged.
- If the product exhibits a distinct change in performance, indicating a need for service.

13 To protect your product against power surges, we recommend the use of a power protection device (Surge Protector).

14 To reduce the risk of fire, electric shock and injury to people, note the following:

- DO NOT use this product near appliances that use water, a swimming pool or in a wet basement.
- DO NOT attempt to operate the machine during an electrical storm or gas leak.

IMPORTANT - For your safety

To ensure safe operation, the supplied three-pin plug must be inserted only into a standard three-pin electrical socket that is effectively grounded through the normal household wiring.

The fact that the equipment operates satisfactorily does not imply that the power is grounded and that the installation is completely safe. For your safety, if in any doubt about the effective grounding of the power, consult a qualified electrician.

Radio interference

This product complies with EN55022 (CISPR Publication 22)/Class B. When connecting the machine to a computer, ensure that you use a USB cable which does not exceed 2.0 metres in length.

International ENERGY STAR® Compliance Statement

The purpose of the International ENERGY STAR® Program is to promote the development and popularization of energy-efficient office equipment.

As an ENERGY STAR® Partner, Brother Industries, Ltd. has determined that this product meets the ENERGY STAR® guidelines for energy efficiency.

Legal limitations for copying

It is an offence to make reproductions of certain items or documents with the intent to commit fraud. This memorandum is intended to be a guide rather than a complete list. We suggest you check with relevant legal authorities if in doubt about a particular item or document.

The following are examples of documents which may not be copied:

- Money
- Bonds or other certificates of debt
- Certificates of Deposit
- Armed Forces Service or Draft papers.
- Passports
- Postage Stamps (cancelled or uncancelled)
- Immigration Papers
- Welfare documents
- Cheques or Drafts drawn by Governmental Agencies
- Identification Documents, badges or insignias
- Licences and Certificates of Title to motor vehicles

Copyrighted works cannot be copied. Sections of a copyrighted work can be copied for ‘fair dealing.’ Multiple copies would indicate improper use.

Works of art should be considered the equivalent of copyrighted works.

Licenses and Certificates of Title to motor vehicles may not be copied under certain state/provincial laws.

Trademarks

The Brother logo is a registered trademark of Brother Industries, Ltd.

Brother is a registered trademark of Brother Industries, Ltd.

Multi-Function Link is a registered trademark of Brother International Corporation.

© 2008 Brother Industries, Ltd. All rights reserved.

Windows Vista is either a registered trademark or trademark of Microsoft Corporation in the United States and other countries.
Microsoft, Windows and Windows Server are registered trademarks of Microsoft Corporation in the U.S. and/or other countries.

Macintosh and TrueType are registered trademarks of Apple Inc.

Nuance, the Nuance logo, PaperPort and ScanSoft are trademarks or registered trademarks of Nuance Communications, Inc. or its affiliates in the United States and/or other countries.

Presto! PageManager is a registered trademark of NewSoft Technology Corporation.

Microdrive is a trademark of International Business Machines Corporation.

Memory Stick is a registered trademark of Sony Corporation.

SanDisk is a licensee of the SD and miniSD trademarks.

xD-Picture Card is a trademark of Fujifilm Co. Ltd., Toshiba Corporation and Olympus Optical Co. Ltd.

Memory Stick Pro, Memory Stick Pro Duo, Memory Stick Duo and MagicGate are trademarks of Sony Corporation.

PictBridge is a trademark.

FaceFilter Studio is a trademark of Reallusion, Inc.

Each company whose software title is mentioned in this manual has a Software License Agreement specific to its proprietary programs.

All other brand and product names mentioned in this User's Guide are registered trademarks of their respective companies.

B Troubleshooting and Routine Maintenance

Troubleshooting

If you think there is a problem with your machine, check the chart below and follow the troubleshooting tips.

Most problems can be easily resolved by yourself. If you need additional help, the Brother Solutions Center offers the latest FAQs and troubleshooting tips. Visit us at http://solutions.brother.com.

If you are having difficulty with your machine

Printing

Difficulty	Suggestions
No printout	Check the interface cable connection on both the machine and your computer.
	Make sure the machine is plugged in and not turned off.
	Check to see if the LCD is showing an error message. (See *Error and Maintenance messages* on page 62.)
	One or more ink cartridges are empty. (See *Replacing the ink cartridges* on page 68.)
	If the LCD says `Cannot Print` and `Replace XX Ink` (where XX is an abbreviation of the empty colour), see *Replacing the ink cartridges* on page 68.
	Check that the correct printer driver has been installed and chosen.
	Make sure the machine is online. Click **Start** and then **Printers and Faxes**. Choose **Brother DCP-XXXX** (where XXXX is your model name), and make sure that 'Use Printer Offline' is unchecked.
	When you choose the **Print Odd Pages** and **Print Even Pages** settings, you may see a printing error message on your computer, as the machine pauses during the printing process. The error message will disappear after the machine re-starts printing.

Printing (continued)

Difficulty	Suggestions
Poor print quality	Check the print quality. (See *Checking the print quality* on page 73.)
	Make sure that the Printer Driver or Paper Type setting in the menu matches the type of paper you are using. (See *Printing* for Windows® or *Printing and Faxing* for Macintosh® in the Software User's Guide on the CD-ROM.)
	Make sure that your ink cartridges are fresh. The following may cause ink to clog: ■ The expiration date written on the cartridge package has passed. (Brother Original cartridge stay usable for up to two years if kept in their original packaging.) ■ The ink cartridge was in your machine over six months. ■ The ink cartridge may not have been stored correctly before use.
	Try using the recommended types of paper. (See *Acceptable paper and other print media* on page 13.)
	The recommended environment for your machine is between 20° C to 33° C.
White horizontal lines appear in text or graphics.	Clean the print head. (See *Cleaning the print head* on page 73.)
	Make sure you are using Brother Original Innobella™ ink.
	Try using the recommended types of paper. (See *Acceptable paper and other print media* on page 13.)
The machine prints blank pages.	Clean the print head. (See *Cleaning the print head* on page 73.)
	Make sure you are using Brother Original Innobella™ ink.
Characters and lines are stacked.	Check the printing alignment. (See *Checking the print alignment* on page 74.)
Printed text or images are skewed.	Make sure the paper is loaded properly in the paper tray and the paper side guides are adjusted correctly. (See *Loading paper and other print media* on page 8.)
	Make sure the Jam Clear Cover is closed properly.
Smudged stain at the top center of the printed page.	Make sure the paper is not too thick or curled. (See *Acceptable paper and other print media* on page 13.)
Smudged stain at the right or left corner of the printed page.	Make sure the paper is not curled when you print on the back side of the paper with the **Print Odd Pages** and **Print Even Pages** settings.
Printing appears dirty or ink seems to run.	Make sure you are using the recommended types of paper. (See *Acceptable paper and other print media* on page 13.) Don't handle the paper until the ink is dry.
	If you are using photo paper, make sure that you have set the correct paper type. If you are printing a photo from your PC, set the **Media Type** in the **Basic** tab of the printer driver.
	Make sure you are using Brother Original Innobella™ ink.
Stains appear on the reverse side or at the bottom of the page.	Make sure the printer platen is not dirty with ink. (See *Cleaning the machine printer platen* on page 72.)
	Make sure you are using Brother Original Innobella™ ink.
	Make sure you are using the paper support flap. (See *Loading paper and other print media* on page 8.)
The machine prints dense lines on the page.	Check **Reverse Order** in the **Basic** tab of the printer driver.
The printouts are wrinkled.	In the printer driver **Advanced** tab, click **Color Settings**, and uncheck **Bi-Directional Printing** for Windows® or **Bi-Directional Printing** for Macintosh®.
	Make sure you are using Brother Original Innobella™ ink.

Printing (continued)

Difficulty	Suggestions
Cannot perform ‘2 in 1 ’ or ‘4 in 1 ’ printing.	Check that the paper size setting in the application and in the printer driver are the same.
Print speed is too slow.	Try changing the printer driver setting. The highest resolution needs longer data processing, sending and printing time. Try the other quality settings in the printer driver **Advanced** tab. Also, click the **Color Settings**, and make sure you uncheck **Colour Enhancement**.
	Set the borderless feature off. Borderless printing is slower than normal printing. (See *Printing for Windows® or Printing and Faxing for Macintosh® in the Software User's Guide on the CD-ROM*.)
Photo paper does not feed properly.	When you print on Brother photo paper, make sure you always load one additional sheet of photo paper first before loading the paper you want to print on.
	Clean the paper pick-up roller. (See *Cleaning the paper pick-up roller* on page 72.)
Colour Enhancement is not working correctly.	If the image data is not full colour in your application (such as 256 colour), Colour Enhancement will not work. Use at least 24 bit colour data with the Colour Enhancement feature.
Machine feeds multiple pages	Make sure the paper is loaded correctly in the paper tray. (See *Loading paper and other print media* on page 8.)
	Check that more than two types of paper are not loaded in the paper tray at any one time.
There is a paper jam.	See *Printer jam or paper jam* on page 66. Make sure the paper length guide is adjusted to the paper size. Do not extend the paper tray when you load A5 or smaller size paper.
Printed pages are not stacked neatly.	Make sure you are using the paper support flap. (See *Loading paper and other print media* on page 8.)
Machine does not print from Adobe Illustrator.	Try to reduce the print resolution. (See *Printing* for Windows® or *Printing and Faxing* for Macintosh® in the Software User's Guide on the CD-ROM.)

Copying Difficulties

Difficulty	Suggestions
Vertical streaks appear on copies	If you see vertical streaks on copies, clean the scanner. (See *Cleaning the scanner* on page 71.)
Poor copy results when using the ADF (DCP-185C only)	Try using the scanner glass. (See *Using the scanner glass* on page 18)
Vertical black line appears in copies (DCP-185C only)	Black vertical lines on copies are typically caused by dirt or correction fluid on the glass strip. Clean the glass strip. (See *Cleaning the scanner* on page 71)
Fit to Page does not work properly.	Make sure your source document is not skewed. Reposition the document and try again.

Scanning Difficulties

Difficulty	Suggestions
TWAIN/WIA errors appear when starting to scan.	Make sure the Brother TWAIN/WIA driver is chosen as the primary source. In PaperPort™ 11SE with OCR, click **File**, **Scan or Get Photo** and click **Select** to choose the Brother TWAIN/WIA driver.
	(Hong Kong users only) Make sure the Brother TWAIN/WIA driver is chosen as the primary source. In Presto!® PageManager® with OCR, click **File**, **Select Source** and choose the Brother TWAIN/WIA driver.
Poor scanning results when using the ADF. (DCP-185C only)	Try using the scanner glass. (See *Using the scanner glass* on page 18)
OCR does not work.	Try increasing the scanner resolution.

Software Difficulties

Difficulty	Suggestions
Cannot install software or print	Run the **Repair MFL-Pro Suite** program on the CD-ROM. This program will repair and reinstall the software.
'Device Busy'	Make sure the machine is not showing an error message on the LCD.
Cannot print images from FaceFilter Studio.	To use FaceFilter Studio, you must install the FaceFilter Studio application from the CD-ROM supplied with your machine. To install FaceFilter Studio see the *Quick Setup Guide*. Also, before you start FaceFilter Studio for the first time, you must make sure your Brother machine is turned on and connected to your computer. This will allow you to access all the functions of FaceFilter Studio.

B

PhotoCapture Center™ Difficulties

Difficulty	Suggestions
Removable Disk does not work correctly.	1 Have you installed the Windows® 2000 update? If not, do the following: 1) Unplug the USB cable. 2) Install the Windows® 2000 update using one of the following methods. ■ Install MFL-Pro Suite from the CD-ROM. (See the *Quick Setup Guide*.) ■ Download the latest service pack from the Microsoft Web site. 3) Wait about 1 minute after you restart the PC, and then connect the USB cable. 2 Take out the memory card or USB Flash memory drive and put it back in again. 3 If you have tried 'Eject' from within Windows®, take out the memory card or USB Flash memory drive before you continue. 4 If an error message appears when you try to eject the memory card or USB Flash memory drive, it means the card is being accessed. Wait a while and then try again. 5 If all of the above do not work, turn off your PC and machine, and then turn them on again. (You will have to unplug the power cord of the machine to turn it off.)
Cannot access Removable Disk from Desktop icon.	Make sure that you have correctly inserted the memory card or USB Flash memory drive.

Error and Maintenance messages

As with any sophisticated office product, errors may occur. If this happens, your machine identifies the error and shows an error message. The most common error and maintenance messages are shown below.

You can correct most errors and routine maintenance messages by yourself. If you need more help, the Brother Solutions Center offers latest FAQs and troubleshooting tips.

Visit us at http://solutions.brother.com.

Error Message	Cause	Action
B&W Print Only	One or more of the colour ink cartridges is empty. While this message appears on the LCD, each operation works in the following way: ■ Printing If you click **Greyscale** in the Advanced tab of the printer driver you can use the machine as a monochrome printer for approximately four weeks depending on the number of pages you print. ■ Copying If the paper type is set to Plain Paper, Inkjet Paper or Transparency you can make copies in monochrome. If the paper type is set to Other Glossy or Brother BP71, the machine will stop all print operations. If you unplug the machine, or take out the empty ink cartridge, you cannot use the machine until you change to a new ink cartridge. Replace the empty ink cartridges. (See *Replacing the ink cartridges* on page 68.)	Replace the empty ink cartridges. (See *Replacing the ink cartridges* on page 68.)
Cannot Detect	You installed a new ink too fast and machine didn't detect it.	Take out the new ink cartridge and reinstall it slowly until it clicks.
	If you are using non Brother Original Ink the machine may not detect the ink cartridge.	Replace the cartridge with a Brother Original Ink Cartridge. If the error remains, contact your Brother dealer.
	An ink cartridge is not installed correctly.	Take out the new ink cartridge and re-install it slowly until it clicks. (See *Replacing the ink cartridges* on page 68.)

Error Message	Cause	Action
Cannot Print Replace XX Ink	One or more of the ink cartridges are empty. The machine will stop all print operations.	Replace the empty ink cartridges. (See *Replacing the ink cartridges* on page 68.)
Close Ink Cover	The ink cartridge cover is not completely closed.	Firmly close the ink cartridge cover until it clicks.
Cover is Open	The scanner cover is not closed completely.	Lift the scanner cover and then close it again.
Data Remaining	Print data is left in the machine's memory.	Press **Stop/Exit**. The machine will cancel the job and clear it from the memory. Try to print again.
Document Jam (DCP-185C only)	The document was not inserted or fed correctly, or the document scanned from the ADF was too long.	See *Using the ADF (DCP-185C only)* on page 17 See *Document jam (DCP-185C only)* on page 65
High Temperature	The print head is too warm.	Allow the machine to cool down.
Hub is Unusable.	A Hub or USB Flash memory drive with a Hub has been connected to the USB direct interface.	A Hub or USB Flash memory drive with a Hub are not supported. Unplug the device from the USB direct interface.
Init Unable XX	The machine has a mechanical problem. **—OR—** A foreign object such as a clip or ripped paper is in the machine.	Open the scanner cover and look on the left, middle, and right hand side under the covers for any foreign objects inside the machine. If the error message continues, disconnect the machine from the power source for several minutes then reconnect it.
Ink Low Black	The indicated ink cartridge is running out of ink.	Order a new ink cartridge. You can continue printing until the LCD shows Cannot Print.
Ink Low Yellow		
Ink Low Cyan		
Ink Low Magenta		
Low Temperature	The print head is too cold.	Allow the machine to warm up.
Media Error	The memory card is either corrupted, incorrectly formatted, or there is a problem with the memory card.	Put the card firmly into the slot again to make sure it is in the correct position. If the error remains, check the media drive (slot) of the machine by putting in another media card that you know is working.
Media is Full.	The memory card or USB flash memory drive you are using already contains 999 files.	Your machine can only save to your memory card or USB flash memory drive if it contains less than 999 files. Try deleting unused files to free some space and try again.
No Cartridge	An ink cartridge is not installed correctly.	Take out the new ink cartridge and re-install it slowly until it clicks. (See *Replacing the ink cartridges* on page 68.)
No File	The memory card or USB Flash memory drive in the media drive does not contain a .JPG file.	Put the correct memory card or USB Flash memory drive into the slot again.

Error Message	Cause	Action
No Paper Fed	The machine is out of paper or paper is not properly loaded in the paper tray, or the Jam Clean Cover is not closed properly.	Do one of the following: ■ Refill the paper in the paper tray, and then press **Mono Start** or **Colour Start**. ■ Remove the paper and load it again and then press **Mono Start** or **Colour Start**. (See *Loading paper and other print media* on page 8.)
	The paper is jammed in the machine.	See *Printer jam or paper jam* on page 66.
Out of Memory	The machine's memory is full.	When copy operation is in progress, press **Stop/Exit** and wait until the other operations in progress finish and then try again.
	The memory card or USB Flash memory drive you are using does not have enough free space to scan the documents.	Delete unused files from your memory card or USB Flash memory drive to make some free space and then try again.
Paper Jam	Paper is jammed in the machine.	Remove the jammed paper by following the steps in *Printer jam or paper jam* on page 66.
		See *Printer jam or paper jam* on page 66. Make sure the paper length guide is adjusted to the paper side.
Print Unable XX	The machine has a mechanical problem. **—OR—** A foreign object such as a clip or ripped paper is in the machine.	Open the scanner cover and look on the left, middle and right hand side under the covers for any foreign objects inside the machine. If the error message continues, disconnect the machine from the power source for several minutes then reconnect it.
Scan Unable XX	The machine has a mechanical problem. **—OR—** A foreign object such as a clip or ripped paper is in the machine.	Open the scanner cover and look on the left, middle and right hand side under the covers for any foreign objects inside the machine. If the error message continues, disconnect the machine from the power source for several minutes then reconnect it.
Unusable Device	A broken device has been connected to the USB direct interface.	Unplug the device from the USB direct interface, then press **On/Off** to turn the machine off then on again.
Unusable Device Please Disconnect USB Device.	A USB device or USB Flash memory drive that is not supported has been connected to the USB direct interface. For more information, visit us at http://solutions.brother.com.	Unplug the device from the USB direct interface.
Wrong Paper Size	Paper is not the correct size.	Make sure the machine's Paper Size setting matches the size of paper you are loding in the tray. Load the correct size of paper, and then press **Mono Start** or **Colour Start**.

Document jam (DCP-185C only)

Documents can jam in the ADF unit if they are not inserted or fed properly, or if they are too long. Follow the steps below to clear a document jam.

Document is jammed in the top of the ADF unit

1. Take out any paper from the ADF that is not jammed.
2. Open the ADF cover.
3. Pull the jammed document up and to the left.

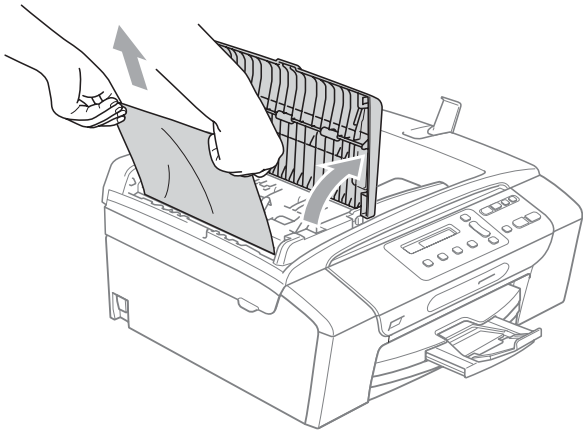

4. Close the ADF cover.
5. Press **Stop/Exit**.

Note

To avoid future document jams close the ADF cover correctly by pressing it down gently in the middle.

Document is jammed inside the ADF unit

1. Take out any paper from the ADF that is not jammed.
2. Lift the document cover.
3. Pull the jammed document out to the left.

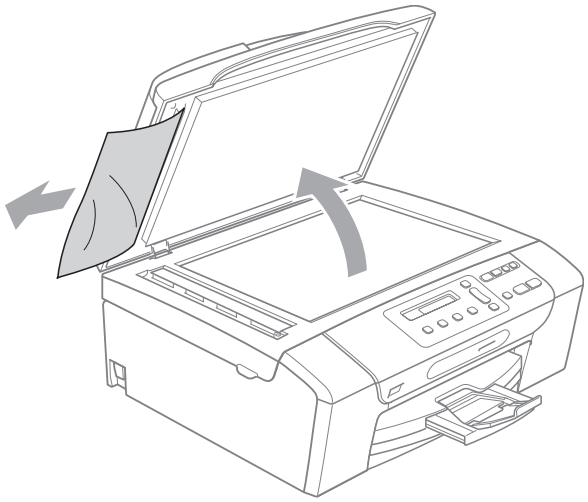

4. Close the document cover.
5. Press **Stop/Exit**.

B

Printer jam or paper jam

Take out the jammed paper depending on where it is jammed in the machine. Open and close the scanner cover to clear the error.

1. Pull the paper tray (1) out of the machine.

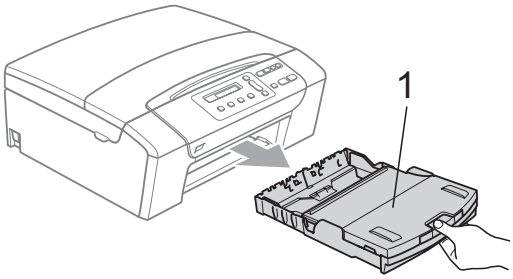

2. Pull out the jammed paper (1) and press **Stop/Exit**.

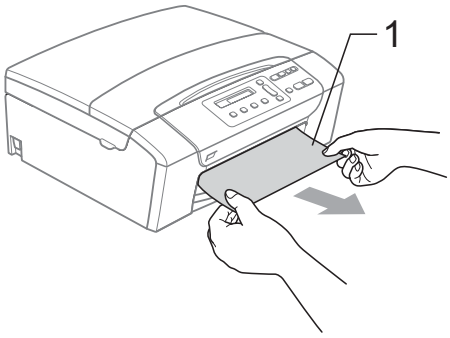

3. Reset the machine by lifting the scanner cover from the front of the machine and then close it.

   - If you cannot remove the jammed paper from the front of the machine, or the error message still appears on the LCD after you have removed the jammed paper, please go to the next step.

4. Open the Jam Clear Cover (1) at the back of the machine. Pull the jammed paper out of the machine.

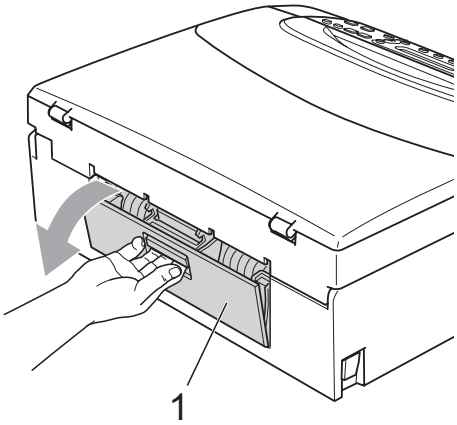

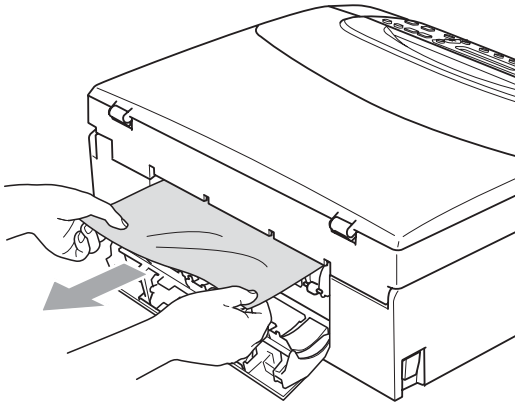

5. Close the Jam Clear Cover.
   Make sure the cover is closed correctly.

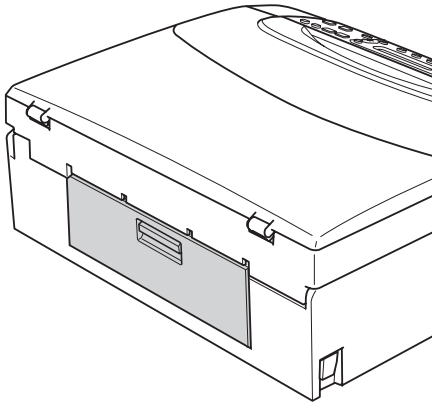

6 Using both hands, use the finger holds on both sides of the machine to lift the scanner cover (1) until it locks securely in the open position.
Make sure that there is no jammed paper left inside the machine under the plastic covers. Check both ends of the print carriage.

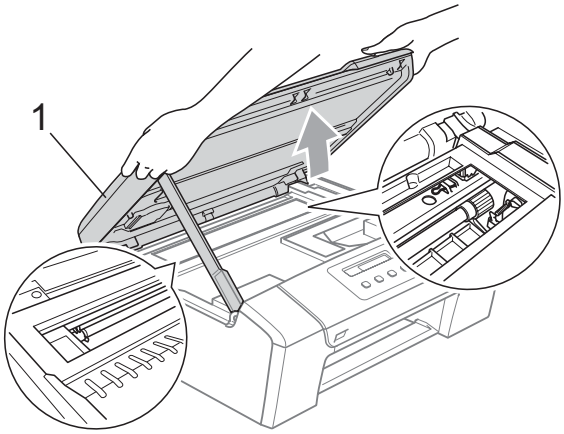

Note

- If the paper is jammed under the print head, unplug the machine from the power source, and then move the print head to take out the paper.
- If the print head has stepped in at the right corner as shown in the illustration, you cannot move the print head. Hold down **Stop/Exit** until the print head moves to the middle. Then unplug the machine from the power source, and take out the paper.

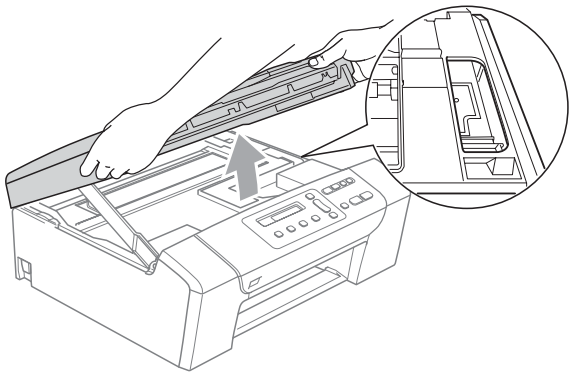

- If ink gets onto your skin, immediately wash with soap and plenty of water.

7 Lift the scanner cover to release the lock (1). Gently push the scanner cover support down (2) and close the scanner cover (3) using both hands.

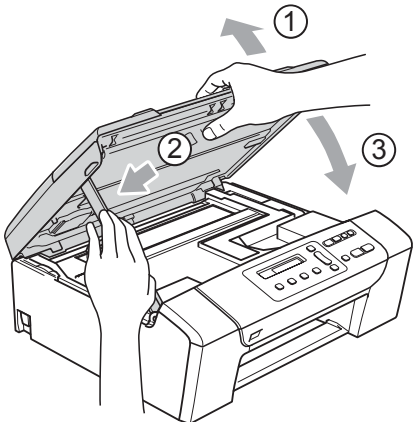

8 Slowly push the paper tray completely into the machine.

Note

Make sure you pull out the paper support until it clicks.

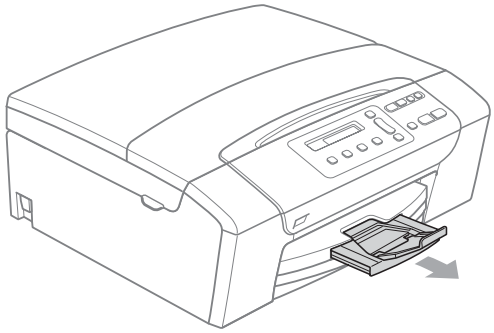

B

Routine maintenance

Replacing the ink cartridges

Your machine is equipped with an ink dot counter. The ink dot counter automatically monitors the level of ink in each of the 4 cartridges. When the machine detects an ink cartridge is running out of ink, the machine will tell you with a message on the LCD.

Note

For example, when one of the ink cartridge is nearly empty, the LCD will display `Ink Low` (name of colour).

You should purchase a replacement cartridge in preparation for when the machine indicates the colour is completely empty.

When one of the ink cartridge is empty, the LCD will display `Cannot Print` or `B&W Print Only`.

You should only replace the actual ink cartridge when this message `Cannot Print` or `B&W Print Only` appears on the LCD.

The LCD will tell you which ink cartridge is low or needs replacing. Be sure to follow the LCD prompts to replace the ink cartridges in the correct order.

Even though the machine tells you that an ink cartridge is empty, there will be a small amount of ink left in the ink cartridge. It is necessary to keep some ink in the ink cartridge to prevent air from drying out and damaging the print head assembly.

CAUTION

Brother multifunction machines are designed to work with ink of a particular specification and will work to a level of optimum performance and reliability when used with genuine Brother Branded ink cartridges. Brother cannot guarantee this optimum performance other brands of ink or ink cartridges, and reliability if ink or ink cartridges of other specifications are used. Brother does not therefore recommend the use of cartridges other than genuine Brother Branded cartridges or the refilling of empty cartridges with ink from other sources. If damage is caused to the print head or other parts of this machine as a result of using other brands of ink or ink cartridges, any repairs required as a result may not be covered by the warranty.

1. Open the ink cartridge cover.
   If one or more ink cartridges are empty, for example Black, the LCD shows `Cannot Print` and `Replace BK Ink`.

2 Press the lock release lever as shown to release the cartridge indicated on the LCD. Remove the cartridge from the machine.

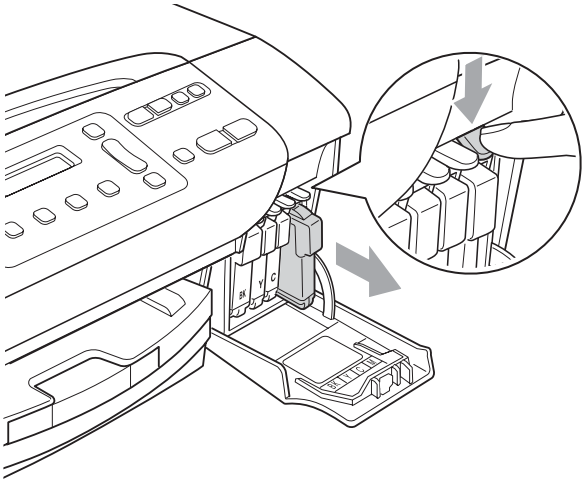

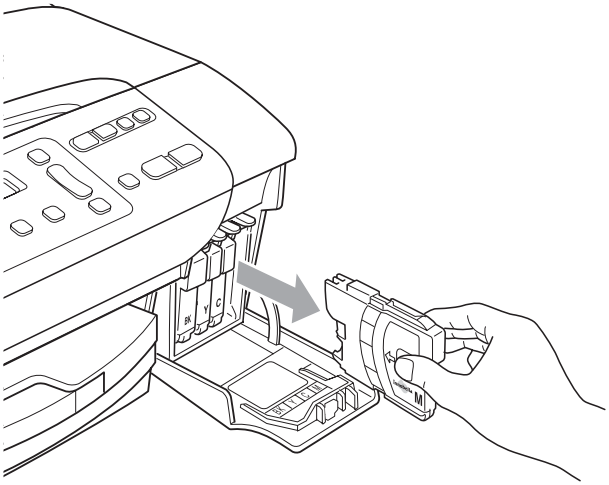

3 Open the new ink cartridge bag for the colour shown on the LCD, and then take out the ink cartridge.

4 Turn the green knob on the protective yellow cap clockwise until it clicks as to release the seal vacuum, then remove the cap (1).

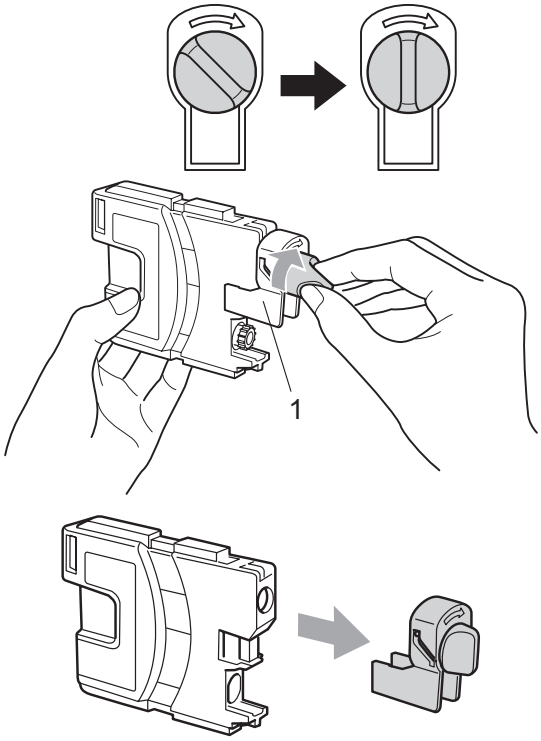

5 Each colour has its own correct position. Insert the ink cartridge in the direction of the arrow on the label.

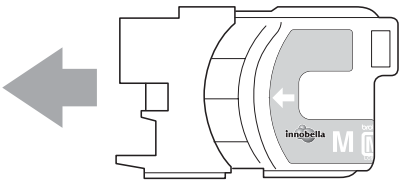

6 Gently push the ink cartridge until it clicks, and then close the ink cartridge cover.

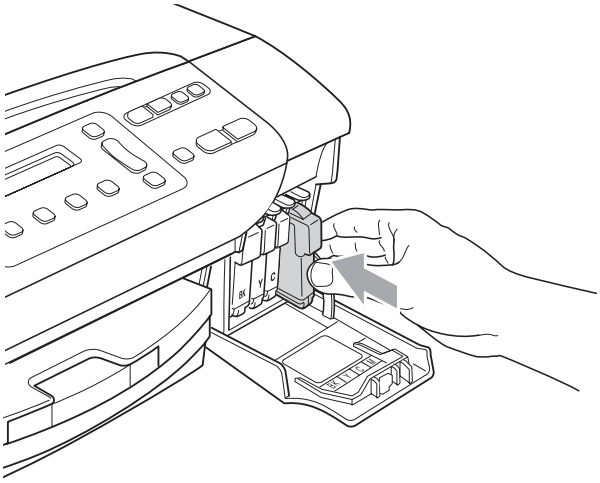

B

7 The machine will automatically reset the ink dot counter.

Note

- If you replaced an ink cartridge, for example Black, the LCD may ask you to verify that it was a brand new one (`Did You Change Blck?`). For each new cartridge you installed, press ▲ (`Yes`) to automatically reset the ink dot counter for that colour. If the ink cartridge you installed is not a brand new one, be sure to press ▼ (`No`).
- If the LCD shows `No Cartridge` or `Cannot Detect` after you install the ink cartridge, check that the ink cartridges are installed correctly.

WARNING

If ink gets in your eyes, wash them out with water at once and call a doctor if you are concerned.

CAUTION

DO NOT take out ink cartridges if you do not need to replace them. If you do so, it may reduce the ink quantity and the machine will not know the quantity of ink left in the cartridge.

DO NOT touch the cartridge insertion slots. If you do so, the ink may stain your skin.

If ink gets on your skin or clothing immediately wash it off with soap or detergent.

If you mix the colours by installing an ink cartridge in the wrong position, clean the print head several times after correcting the cartridge installation.

Once you open an ink cartridge, install it in the machine and use it up within six months of installation. Use unopened ink cartridges by the expiration date written on the cartridge package.

DO NOT dismantle or tamper with the ink cartridge, this can cause the ink to leak out of the cartridge.

Cleaning the outside of the machine

Clean the outside of the machine as follows:

CAUTION

Use neutral detergents. Cleaning with volatile liquids such as thinner or benzine will damage the outside surface of the machine.

DO NOT use cleaning materials that contain ammonia.

DO NOT use isopropyl alcohol to remove dirt from the control panel. It may crack the panel.

1 Pull the paper tray completely out of the machine.

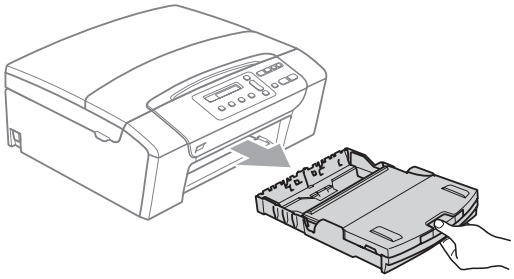

2 Wipe the outside of the machine with a soft cloth to remove dust.

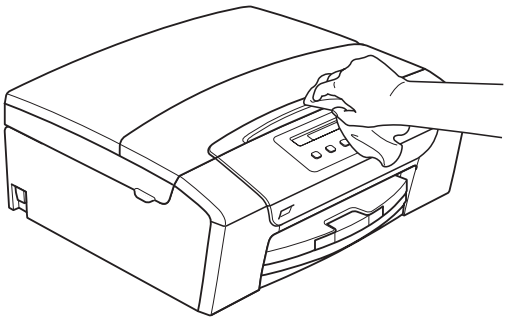

3 Lift the output paper tray cover and remove anything that is stuck inside the paper tray.

4 Wipe the inside and outside of the paper tray with a soft cloth to remove dust.

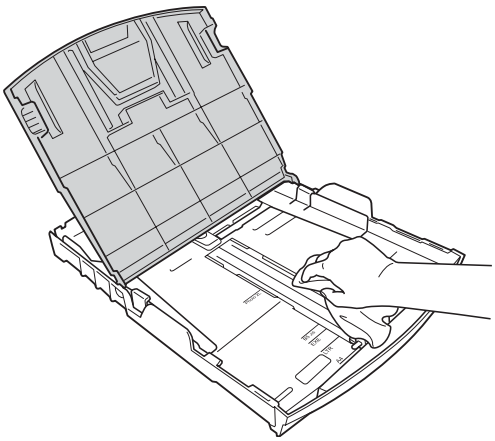

5 Close the output paper tray cover and slowly push the paper tray completely into the machine.

Cleaning the scanner

1 Lift the document cover (1). Clean the scanner glass (2) and white plastic (3) with a soft lint-free cloth moistened with a non-flammable glass cleaner.

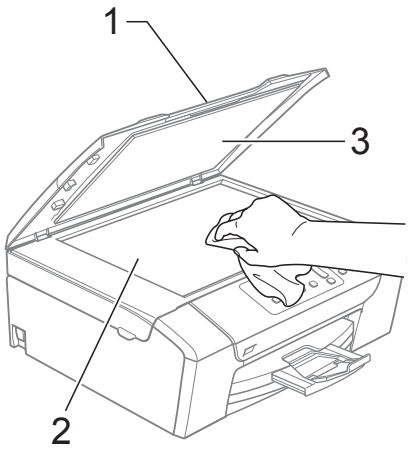

2 (DCP-185C only)
In the ADF unit, clean the white bar (1) and the glass strip (2) with a soft lint-free cloth moistened with a non-flammable glass cleaner.

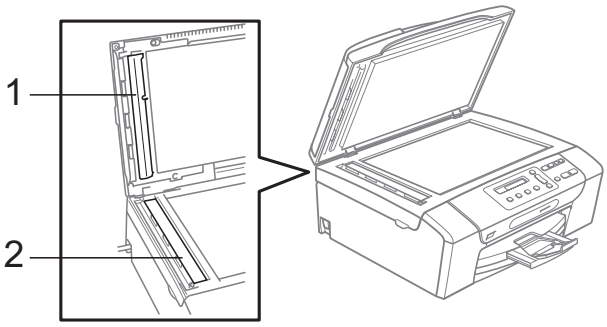

Note

In addition to cleaning the glass strip with a non-flammable glass cleaner, run your finger tip over the glass strip to see if you can feel anything on it. If you feel dirt or debris, clean the glass strip again concentrating on that area. You may need to repeat the cleaning process three or four times. To test, make a copy after each cleaning attempt.

B

Cleaning the machine printer platen

WARNING

Be sure to unplug the machine from the electrical socket before cleaning the printer platen (1).

If ink is scattered on or around the printer platen, wipe it off with a soft, dry, lint-free cloth.

1. Lift the scanner cover until it locks securely into the open position.
2. Clean the machine printer platen (1).

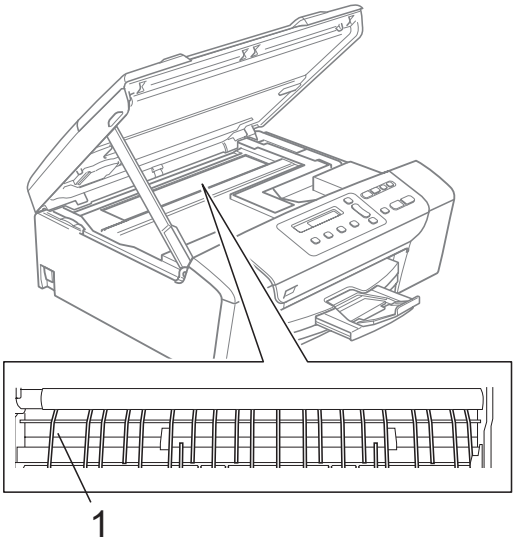

Cleaning the paper pick-up roller

1. Pull the paper tray completely out of the machine.
2. Unplug the machine from the electrical socket and open the Jam Clear Cover (1) at the back of the machine.

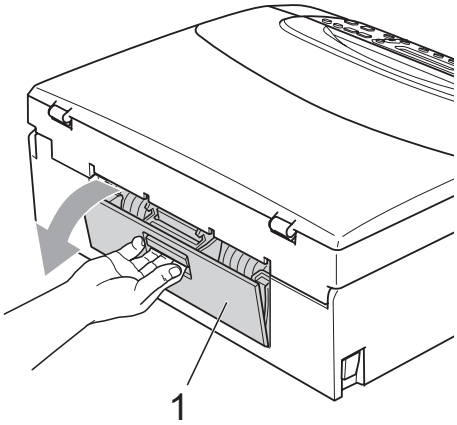

3. Clean the Paper Pick-up Roller (1) with isopropyl alcohol on a cotton swab.

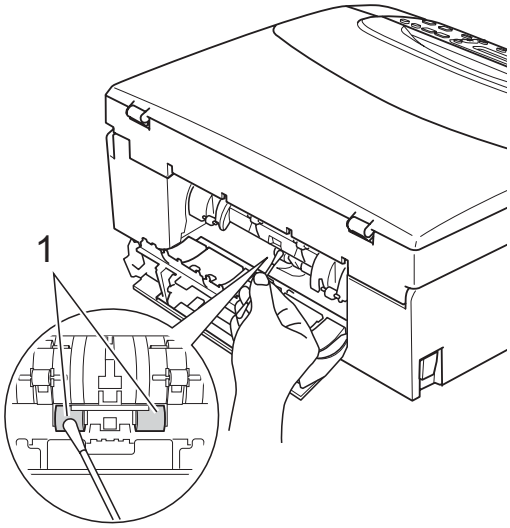

4. Close the Jam Clear Cover.
   Make sure the cover is closed correctly.
5. Put the paper tray firmly back in the machine.
6. Re-connect the power cord.

Cleaning the print head

To maintain print quality, the machine will automatically clean the print head when needed. You can start the cleaning process manually if there is a print quality problem.

Clean the print head and ink cartridges if you get a horizontal line or blank text in the text or graphics on your printed pages. You can clean Black only, three colours at a time (Cyan/Yellow/Magenta), or all four colours at once.

Cleaning the print head consumes ink. Cleaning too often uses ink unnecessarily.

CAUTION

DO NOT touch the print head. Touching the print head may cause permanent damage and may void the print head's warranty.

1. Press **Ink Management**.
2. Press ▲ or ▼ to choose `Cleaning`.
   Press **OK**.
3. Press ▲ or ▼ to choose `Black`, `Color` or `All`.
   Press **OK**.
   The machine cleans the print head.
   When cleaning is finished, the machine will go back to standby mode automatically.

Note

If you clean the print head at least five times and the print has not improved, try installing a new Genuine Brother Brand Replacement cartridge for each problem colour. Try cleaning the print head again up to five more times. If the print has not improved call your Brother dealer.

Checking the print quality

If faded or streaked colours and text appear on your output, some of the nozzles may be clogged. You can check this by printing the Print Quality Check Sheet and looking at the nozzle check pattern.

1. Press **Ink Management**.
2. Press ▲ or ▼ to choose `Test Print`.
   Press **OK**.
3. Press ▲ or ▼ to choose `Print Quality`.
   Press **OK**.
4. Press **Colour Start**.
   The machine begins printing the Print Quality Check Sheet.
5. Check the quality of the four colour blocks on the sheet.
6. The LCD asks you if the quality of the four colours are ok.

   `Is Quality OK?`

   `▲ Yes ▼ No`
7. Do one of the following:
   - If all lines are clear and visible, press ▲ to choose `Yes`, and go to step ⓫.
   - If you can see missing short lines as shown below, press ▼ to choose `No`.

OK

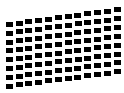

Poor

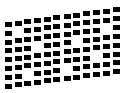

8. The LCD asks you if the print quality is OK for black and three colours.

   `Black OK?`

   `▲ Yes ▼ No`

   Press ▲ (`Yes`) or ▼ (`No`).

B

9 The LCD asks you if you want to start cleaning.

```
Start Cleaning?
```

```
▲ Yes ▼ No
```

Press ▲ (Yes).
The machine starts cleaning the print head.

10 After cleaning is finished, press **Colour Start**.
The machine starts printing the Print Quality Check Sheet again and then return to step ❺.

11 Press **Stop/Exit**.
If you repeat this procedure at least five times and the print quality is still poor, replace the ink cartridge for the clogged colour.
After replacing the ink cartridge, check the print quality. If the problem still exists, repeat the cleaning and test print procedures at least five times for the new ink cartridge. If ink is still missing, call your Brother dealer.

CAUTION

DO NOT touch the print head. Touching the print head may cause permanent damage and may void the print head's warranty.

Note

When a print head nozzle is clogged the printed sample looks like this.

→

After the print head nozzle is cleaned, the horizontal lines are gone.

Checking the print alignment

You may need to adjust the print alignment after transporting the machine, if your printed text becomes blurred or images become faded.

1 Press **Ink Management**.

2 Press ▲ or ▼ to choose Test Print.
Press **OK**.

3 Press ▲ or ▼ to choose Alignment.
Press **OK**.

4 Press **Mono Start** or **Colour Start**.
The machine starts printing the Alignment Check Sheet.

```
Is Alignment OK?
```

```
▲ Yes ▼ No
```

5 Check the 600 dpi and 1200 dpi test prints to see if number 5 most closely matches number 0.

- If the number 5 samples of both the 600 dpi and 1200 dpi test prints are the best matches, press ▲ (Yes) to finish Alignment Check, and go to step ❽.
- If another test print number is a better match for either 600 dpi or 1200 dpi, press ▼ (No) to choose it.

6 For 600 dpi, press ▲ or ▼ to select the number of the test print that most closely matches the number 0 sample (1-8).

```
Close Ink Cover
```

```
Select Best #5
```

Press **OK**.

7 For 1200 dpi, press ▲ or ▼ to select the number of the test print that most closely matches the number 0 sample (1-8).

```
1200dpi Adjust
```

```
Select Best #5
```

Press **OK**.

8 Press **Stop/Exit**.

Checking the ink volume

You can check the ink that is left in the cartridge.

1 Press **Ink Management**.

2 Press ▲ or ▼ to choose `Ink Volume`.
Press **OK**.
The LCD shows the ink volume.

```
BK:-■■■■■□□+ ↕
```

3 Press ▲ or ▼ to choose the colour you want to check.

4 Press **Stop/Exit**.

Note

You can check the ink volume from your computer. (See *Printing* for Windows® or *Printing and Faxing* for Macintosh® in the Software User's Guide on the CD-ROM.)

Machine Information

Checking the serial number

You can see the machine's serial number on the LCD.

1 Press **Menu**.

2 Press ▲ or ▼ to choose `4.Machine Info.`
Press **OK**.

3 Press ▲ or ▼ to choose `1.Serial No.`
Press **OK**.

```
XXXXXXX
```

4 Press **Stop/Exit**.

B

Packing and shipping the machine

When you transport the machine, use the packing materials that came with your machine. Follow the instructions below to properly pack your machine. Damage caused to your machine during transit is not covered by your warranty.

CAUTION

It is important to allow the machine to 'park' the print head after a print job. Listen carefully to the machine before unplugging it to make sure that all mechanical noise has stopped. Not allowing the machine to finish this parking process may lead to print problems and possible damage to the print head.

1. Open the ink cartridge cover.
2. Press the lock release lever to release the ink cartridge and take out all the ink cartridges. (See *Replacing the ink cartridges* on page 68.)
3. Install the light-green protective part and then close the ink cartridge cover.

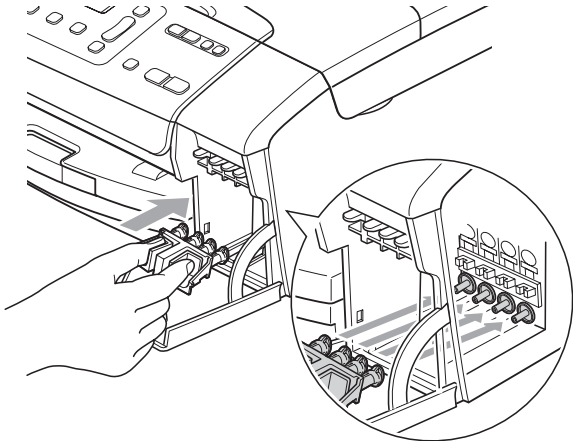

CAUTION

Make sure that the plastic tabs on both sides of the green protective part (1) have securely clicked into place (2).

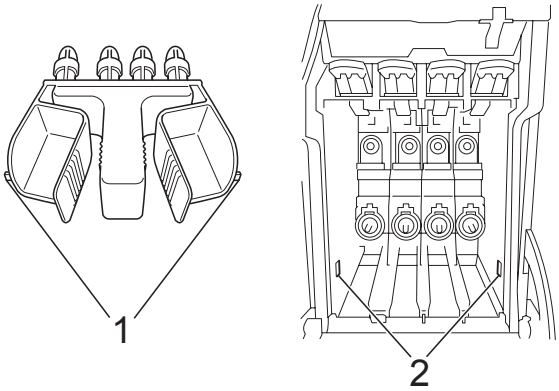

If you are not able to find the green protective part, DO NOT remove the ink cartridges before shipping. It is essential that the machine be shipped with either the green protective part or the ink cartridges in position. Shipping without them will cause damage to your machine and may void your warranty.

4. Unplug the machine from the electrical socket.
5. Using both hands, use the plastic tabs on both sides of the machine to lift the scanner cover until it locks securely into the open position. Then unplug the interface cable from the machine, if it is connected.

6 Lift the scanner cover (1) to release the lock. Gently push the scanner cover support down (2) and close the scanner cover (3).

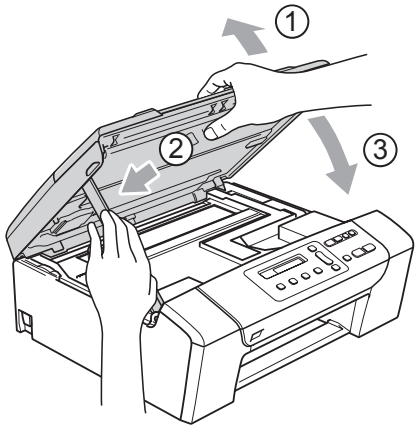

7 Wrap the machine in the bag and put it in the original carton with the original packing material.

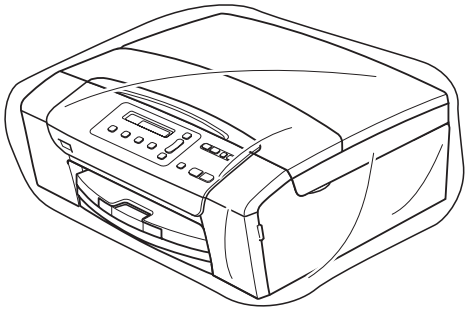

8 Pack the printed materials in the original carton as shown below. Do not pack the used ink cartridges in the carton.

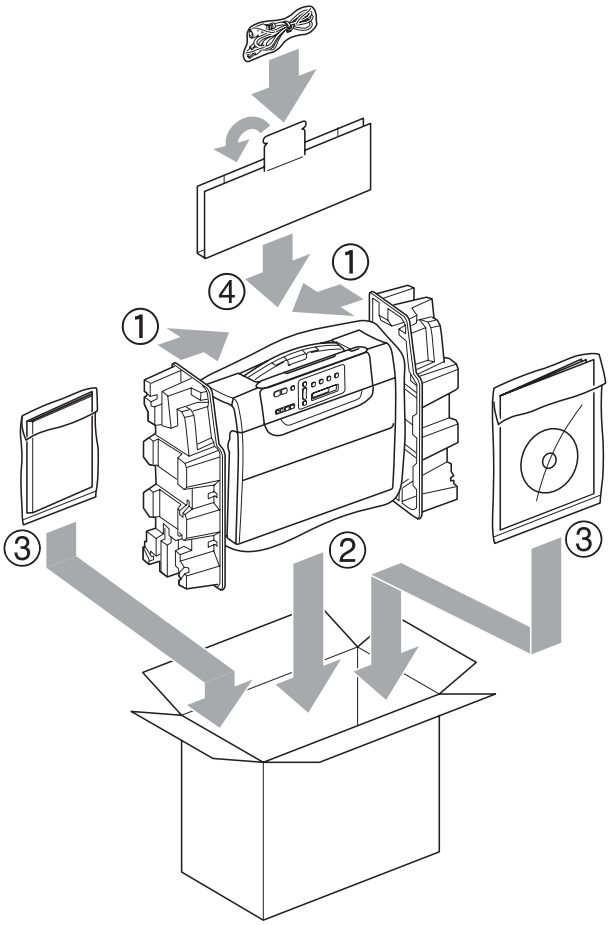

9 Close the carton and tape it shut.

B

C Menu and Features

On-screen programming

Your machine is designed to be easy to operate with LCD on-screen programming using the menu keys. User-friendly programming helps you take full advantage of all the menu selections your machine has to offer.

Since your programming is done on the LCD, we have created step-by-step on-screen instructions to help you program your machine. All you need to do is follow the instructions as they guide you through the menu selections and programming options.

Menu table

You can program your machine by using the menu table that begins on page 80. These pages list the menu selections and options.

Menu keys

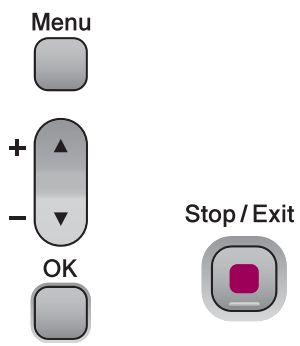

Menu	Access the menu.
+ –	Scroll through the current menu level.
OK	Go to the next menu level. Accept an option.
Stop / Exit	Exit the menu.

To access the menu mode:

1. Press **Menu**.
2. Choose an option.
   You can scroll more quickly through each menu level by pressing ▲ or ▼ for the direction you want.

   `1.Copy`

   `2.PhotoCapture`

   `3.Print Reports`

   `4.Machine Info.`

   `0.Initial Setup`
3. Press **OK** when that option appears on the LCD.
   The LCD will then show the next menu level.
4. Press ▲ or ▼ to scroll to your next menu selection.
5. Press **OK**.
   When you finish setting an option, the LCD shows `Accepted`.
6. Press **Stop/Exit**.

Menu Table

The menu table will help you understand the menu selections and options that are found in the machine's programs. The factory settings are shown in Bold with an asterisk.

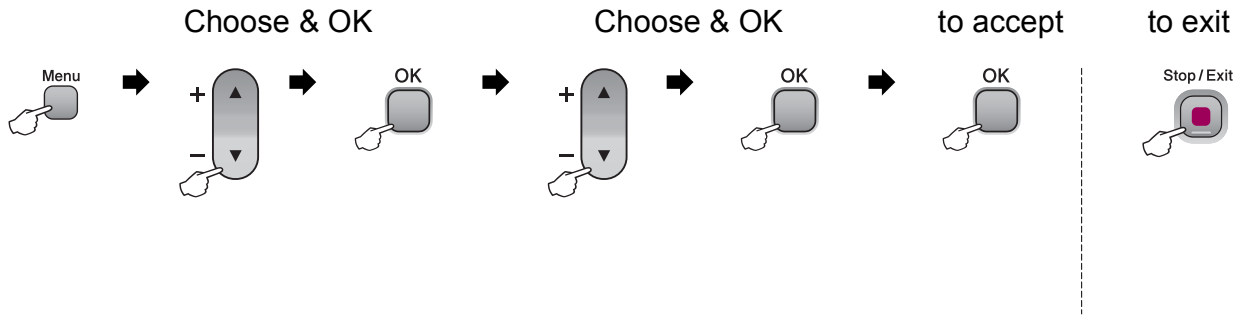

Main Menu	Submenu	Menu Selections	Options	Descriptions	Page
1.Copy	1.Paper Type	—	**Plain Paper*** Inkjet Paper Brother BP71 Other Glossy Transparency	Sets the type of paper in the paper tray.	27
	2.Paper Size	—	Letter Legal **A4*** A5 10x15cm	Sets the size of the paper in the paper tray.	27
	3.Quality	—	Best **Normal*** Fast	Chooses the copy resolution for your type of document.	23
	4.Brightness	—	-□□□□■+ -□□□■□+ **-□□■□□+*** -□■□□□+ -■□□□□+	Adjusts the brightness for copies.	26
	5.Contrast	—	-□□□□■+ -□□□■□+ **-□□■□□+*** -□■□□□+ -■□□□□+	Adjusts the contrast for copies.	26
	The factory settings are shown in Bold with an asterisk.				

Main Menu	Submenu	Menu Selections	Options	Descriptions	Page
2.PhotoCapture	1.Print Quality	—	Normal **Photo***	Selects the print quality.	36
	2.Paper Type	—	Plain Paper Inkjet Paper Brother BP71 **Other Glossy***	Selects the paper type.	36
	3.Paper Size	—	Letter A4 **10 x 15cm*** 13 x 18cm	Selects the paper size.	36
	4.Print Size	—	8 x 10cm 9 x 13cm 10 x 15cm 13 x 18cm 15 x 20cm **Max. Size***	Selects the print size. (Appears when A4 or Letter is selected in the Paper Size menu.)	36
	The factory settings are shown in Bold with an asterisk.				

C

Main Menu	Submenu	Menu Selections	Options	Descriptions	Page
2.PhotoCapture (Continued)	5.Color Enhance	Enhance:On **Enhance:Off***	1.Brightness -□□□□■+ -□□□■□+ **-□□■□□+*** -□■□□□+ -■□□□□+	Adjusts the brightness.	37
			2.Contrast -□□□□■+ -□□□■□+ **-□□■□□+*** -□■□□□+ -■□□□□+	Adjusts the contrast.	37
			3.White Balance -□□□□■+ -□□□■□+ **-□□■□□+*** -□■□□□+ -■□□□□+	Adjusts the hue of the white areas.	37
			4.Sharpness -□□□□■+ -□□□■□+ **-□□■□□+*** -□■□□□+ -■□□□□+	Enhances the detail of the image.	38
			5.Color Density -□□□□■+ -□□□■□+ **-□□■□□+*** -□■□□□+ -■□□□□+	Adjusts the total amount of colour in the image.	38
	6.Cropping	—	**On*** Off	Crops the image around the margin to fit the paper size or print size. Turn this feature off if you want to print whole images or prevent unwanted cropping.	39
	7.Borderless	—	**On*** Off	Expands the printable area to fit the edges of the paper.	39
	The factory settings are shown in Bold with an asterisk.				

Main Menu	Submenu	Menu Selections	Options	Descriptions	Page
2.PhotoCapture (Continued)	8.Date Print	—	On **Off***	Prints the date on your photo.	39
	0.Scan to Media	1.Quality	B/W 200x100 dpi B/W 200 dpi **Color 150 dpi*** Color 300 dpi Color 600 dpi	Selects the Scan resolution for your type of document.	40
		2.B/W File Type	**TIFF*** PDF	Selects the default file format for black and white scanning.	
		3.ColorFile Type	**PDF*** JPEG	Selects the default file format for colour scanning.	
3.Print Reports	1.Help List	—	—	You can print these lists and reports.	20
	2.User Settings	—	—		
4.Machine Info.	1.Serial No.	—	—	Lets you check the serial number of your machine.	75
	The factory settings are shown in Bold with an asterisk.				

C

Main Menu	Submenu	Menu Selections	Options	Descriptions	Page
0.Initial Setup	1.Date&Time	—	—	Puts the date and time on your machine.	See *Quick Setup Guide*
	2.LCD Contrast	—	Light **Dark***	Adjusts the contrast of the LCD.	19
	3.Sleep Mode	—	10 Mins **5 Mins*** 3 Mins 2 Mins 1 Min 60 Mins 30 Mins	You can choose how long the machine must be idle before it goes into sleep mode.	19
	0.Local Language	—	**English*** French German Dutch Italian	Allows you to change the LCD language for your country.	19
	The factory settings are shown in Bold with an asterisk.				

D Specifications

General

Printer Type	Inkjet	
Print Method	Black:	Piezo with 94 × 1 nozzle
	Colour:	Piezo with 94 × 3 nozzles
Memory Capacity	32 MB	
LCD (Liquid Crystal Display)	16 characters × 1 line	
Power Source	AC 220 to 240 V 50/60 Hz	
Power Consumption	DCP-145C	
	Off Mode:	Average 0.5 W
	Sleep Mode:	Average 2.5 W
	Standby:	Average 3.5 W
	Operating:	Average 15 W
	DCP-165C	
	Off Mode:	Average 0.5 W
	Sleep Mode:	Average 2.5 W
	Standby:	Average 3.5 W
	Operating:	Average 18 W
	DCP-185C	
	Off Mode:	Average 0.6 W
	Sleep Mode:	Average 2.5 W
	Standby:	Average 3.5 W
	Operating:	Average 23 W

Dimensions	**(DCP-145C [1] and DCP-165C)**

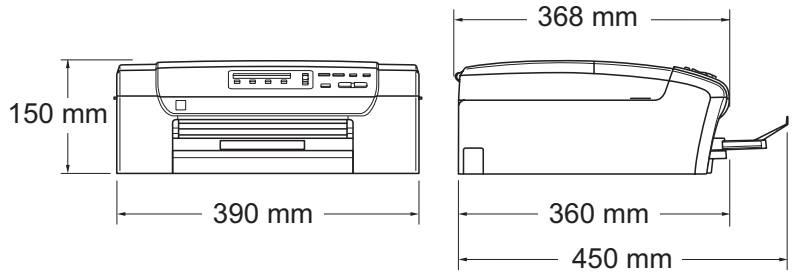

[1] The DCP-145C only supports USB Flash memory drive.

(DCP-185C)

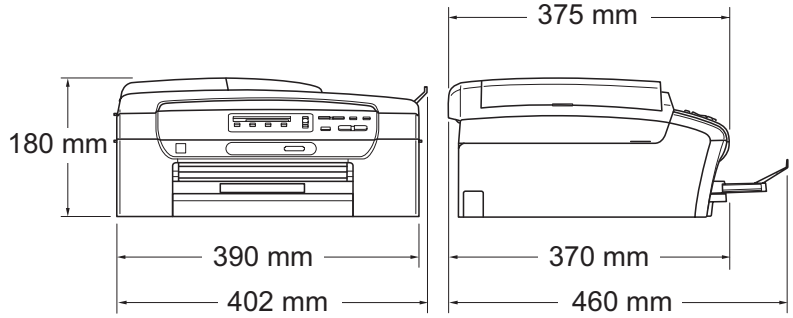

Weight	DCP-145C and DCP-165C 7.1kg
	DCP-185C 7.8 kg
Noise	Operating: 50 dB or less [1]
	Office equipment with LWAd > 63.0 dB (A) is not suitable for use in rooms where people do primarily intellectual work. Such equipment should be placed in separate rooms because of the noise emission.
Temperature	Operating: 10 - 35° C
	Best Print Quality: 20 - 33° C
Humidity	Operating: 20 - 80% (without condensation)
	Best Print Quality: 20 - 80% (without condensation)
ADF (automatic document feeder) (DCP-185C only)	Up to 15 pages
	Recommended Environment for Best Results:
	Temperature: 20° C - 30° C
	Humidity: 50% - 70%
	Paper: 80 gsm
Paper Tray	100 Sheets 80 gsm

[1] This depends on printing conditions.

Print media

Paper Input	**Paper Tray** ■ Paper type: Plain paper, inkjet paper (coated paper), glossy paper [2], transparencies [1] [2] and envelopes ■ Paper size: Letter, Legal, Executive, A4, A5, A6, JIS B5, envelopes (commercial No.10, DL, C5, Monarch, JE4), Photo 10 × 15 cm, Photo 2L 13 × 18 cm, Index card and Post card [3]. Width: 100mm - 215.9mm Length: 150mm - 355.6mm For more details, see *Paper weight, thickness and capacity* on page 16. ■ Maximum paper tray capacity: Approx. 100 sheets of 80 gsm plain paper
Paper Output	Up to 50 sheets of A4 plain paper (face up print delivery to the output paper tray) [2]

1 Use only transparencies recommended for inkjet printing.

2 For glossy paper or transparencies, we recommend removing printed pages from the output paper tray immediately after they exit the machine to avoid smudging.

3 See *Paper type and size for each operation* on page 15.

D

Copy

Colour/Monochrome	Yes/Yes
Document Size	(DCP-185C only) ADF Width: 148 mm to 216 mm (DCP-185C only) ADF Length: 148 mm to 355.6 mm Scanner Glass Width: Max. 215.9 mm Scanner Glass Length: Max. 297 mm
Copy Speed	(DCP-145C) Monochrome: Up to 5 pages/minute (A4 paper) [1] Colour: Up to 5 pages/minute (A4 paper) [1] (DCP-165C and DCP-185C) Monochrome: Up to 20 pages/minute (A4 paper) [1] Colour: Up to 18 pages/minute (A4 paper) [1]
Multiple Copies	Stacks up to 99 pages Sorts up to 99 pages (Monochrome only) (DCP-185C only)
Enlarge/Reduce	25% to 400% (in increments of 1%)
Resolution	(Monochrome) ■ Scans up to 1200×1200 dpi ■ Prints up to 1200×1200 dpi (Colour) ■ Scans up to 600×1200 dpi ■ Prints up to 600×1200 dpi

[1] Based on Brother standard pattern (Fast mode/Stack Copy). Copy speeds vary with the complexity of the document.

PhotoCapture Center™

Note

The DCP-145C only supports USB Flash memory drives.

Compatible Media [1]	Memory Stick® Memory Stick Pro™ Memory Stick Micro (M2) with adapter Memory Stick Duo™ with adapter SD [2] SDHC [3] microSD with adapter miniSD™ with adapter xD-Picure Card™ [4] USB Flash memory drive [5]
Resolution	Up to 1200×2400 dpi
File Extension	DPOF, EXIF, DCF
(Media Format)	Photo Print: JPEG [6]
(Image Format)	Scan to Media: JPEG, PDF (Colour) TIFF, PDF (Monochrome)
Number of Files	Up to 999 files in the memory card (The folder inside memory cards or USB Flash memory drive is also counted)
Folder	File must be in the 4th folder level of the memory card or USB Flash memory drive.
Borderless	Letter, A4, Photo 10×15 cm, Photo 2L (13x18 cm) [7]

1 Memory cards, adapters and USB Flash memory drive are not included.

2 16MB to 2GB

3 4GB to 8GB

4 xD-Picture Card™ Conventional Card from 16MB to 512MB
xD-Picture Card™ Type M from 256MB to 2GB
xD-Picture Card™ Type M+ 1GB and 2GB
xD-Picture Card™ Type H from 256MB to 2GB

5 USB 2.0 standard
USB Mass Storage Class from 16MB to 8GB
Support format: FAT12/FAT16/FAT32

6 Progressive JPEG format is not supported.

7 See *Paper type and size for each operation* on page 15.

PictBridge

Compatibility	Supports the Camera & Imaging Products Association PictBridge standard CIPA DC-001. Visit http://www.cipa.jp/pictbridge for more information.
Interface	PictBridge (USB) Port

Scanner

Colour/Monochrome	Yes/Yes
TWAIN Compliant	Yes (Windows® 2000 Professional/XP/XP Professional x64 Edition/Windows Vista®)
	Mac OS® X 10.2.4 or greater
WIA Compliant	Yes (Windows® XP [1]/Windows Vista®)
Colour Depth	36 bit colour Processing (Input)
	(Actual Input: 30 bit colour/Actual Output: 24 bit colour) [2]
	24 bit colour Processing (Output)
Resolution	Up to 19200 × 19200 dpi (interpolated) [2]
	Up to 1200 × 2400 dpi (optical) (Scanner Glass)
	Up to 1200 × 600 dpi (optical) (ADF) (DCP-185C only)
Scanning Speed	Monochrome: Up to 3.44 sec.
	Colour: Up to 4.83 sec.
	(A4 size in 100 × 100 dpi)
Document Size	(DCP-185C only) ADF Width: 148 mm to 215.9 mm
	(DCP-185C only) ADF Length: 148 mm to 355.6 mm
	Scanner Glass Width: Max. 215.9 mm
	Scanner Glass Length: Max. 297 mm
Scanning Width	Up to 210 mm
Greyscale	256 levels

1 Windows® XP in this User's Guide includes Windows® XP Home Edition, Windows® XP Professional, and Windows® XP Professional x64 Edition.

2 Maximum 1200 × 1200 dpi scanning when using the WIA Driver for Windows® XP, and Windows Vista® (resolution up to 19200 × 19200 dpi can be selected by using the Brother scanner utility)

Printer

Printer Driver	Windows® 2000 Professional/XP/XP Professional x64 Edition/ Windows Vista® driver supporting Brother Native Compression mode
	Mac OS® X 10.2.4 or greater: Brother Ink driver
Resolution	Up to 1200 × 6000 dpi
	1200 × 2400 dpi
	1200 × 1200 dpi
	600 × 1200 dpi
	600 × 600 dpi
	600 × 300 dpi
	450 × 150 dpi (Mono)
	600 × 150 dpi (Colour)
Print Speed	(DCP-145C)
	Monochrome: Up to 27 pages/minute [1]
	Colour: Up to 22 pages/minute [1]
	(DCP-165C and DCP-185C)
	Monochrome: Up to 30 pages/minute [1]
	Colour: Up to 25 pages/minute [1]
Printing Width	204 mm (210 mm) [2] (A4 size)
Borderless	Letter, A4, A6, Photo (10x15 cm), Index Card, Photo 2L (13x18 cm), Post Card [3]

1 Based on Brother standard pattern.
A4 size in draft mode.

2 When you set the Borderless feature to On.

3 See *Paper type and size for each operation* on page 15.

Interfaces

USB [1 2]	A USB 2.0 interface cable that is no longer than 2.0 m.

1 Your machine has a Full-speed USB 2.0 interface. This interface is compatible with Hi-Speed USB 2.0; however, the maximum data transfer rate will be 12 Mbits/s. The machine can also be connected to a computer that has a USB 1.1 interface.

2 Third party USB ports are not supported for Macintosh®.

Computer requirements

SUPPORTED OPERATING SYSTEMS AND SOFTWARE FUNCTIONS								
Computer Platform & Operating System Version		Supported PC Software Functions	PC Interface	Processor Minimum Speed	Minimum RAM	Recommended RAM	Hard Disk Space to install	
							For Drivers	For Applications
Windows® Operating System [1]	2000 Professional [4]	Printing, Scanning, Removable Disk	USB	Intel® Pentium® II or equivalent	64 MB	256 MB	110 MB	340 MB
	XP Home [2 4] XP Professional [2 4]				128 MB		110 MB	340 MB
	Professional x64 Edition [2]			64-bit (Intel®64 or AMD64) supported CPU	256 MB	512 MB	110 MB	340 MB
	Windows Vista® [2]			Intel® Pentium® 4 or equivalent 64-bit (Intel®64 or AMD64) supported CPU	512 MB	1 GB	600 MB	530 MB
Macintosh® Operating System [5]	Mac OS® X 10.2.4 - 10.4.3	Printing, Scanning, Removable Disk	USB [3]	PowerPC G4/G5 PowerPC G3 350MHz	128 MB	256 MB	80 MB	400 MB
	Mac OS® X 10.4.4 or greater	Printing, Scanning, Removable Disk	USB [3]	PowerPC G4/G5 Intel® Core™ Processor	512 MB	1 GB		

Conditions:

1 Microsoft® Internet Explorer 5.5 or greater.

2 For WIA, 1200x1200 resolution. Brother Scanner Utility enables to enhance up to 19200 x 19200 dpi.

3 Third party USB ports are not supported.

4 PaperPort™ 11SE supports Microsoft® SP4 or higher for Windows® 2000 and SP2 or higher for XP.

5 Presto!® PageManager® on the CD-ROM supports Mac OS® X 10.3.9 or higher.
For Mac OS® X 10.2.4-10.3.8 Presto!® PageManager® is available as a download from the Brother Solutions Center.

For the latest driver updates, visit http://solutions.brother.com.
All trademarks, brand and product names are property of their respective companies.

D

Consumable items

Ink

The machine uses individual Black, Yellow, Cyan and Magenta ink cartridges that are separate from the print head assembly.

Service Life of Ink Cartridge

The first time you install a set of ink cartridges the machine will use an amount of ink to fill the ink delivery tubes for high quality printouts. This process will only happen once. With all following ink cartridges you can print the specified number of pages.

The cartridges provided with your machine have a lower yield than standard cartridges (65%).

Replacement Ink Cartridge

Ink cartridge (DCP-145C, DCP-165C)

Black (LC38BK)	Yellow (LC38Y)	Cyan (LC38C)	Magenta (LC38M)
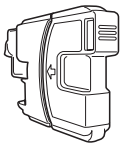	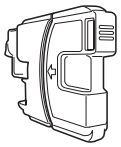	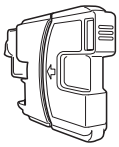	

Black - Approximately 300 pages [1]

Yellow, Cyan and Magenta - Approximately 260 pages [1]

Ink cartridge (DCP-185C)

Black (LC67BK)	Yellow (LC67Y)	Cyan (LC67C)	Magenta (LC67M)
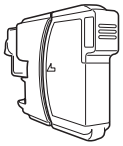	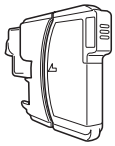	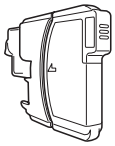	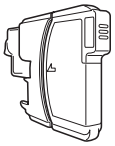

Black - Approximately 450 pages [1]

Yellow, Cyan and Magenta - Approximately 325 pages [1]

For more information about the replacement consumables, visit us at http://www.brother.com/pageyield.

[1] Approx. cartridge yield is declared in accordance with ISO/IEC 24711.

What is Innobella™?

Innobella™ is a range of genuine consumables offered by Brother. The name "Innobella™" derives from the words "Innovation" and "Bella" (meaning "Beautiful" in Italian) and is a representation of the "innovative" technology providing you with "beautiful“and “long lasting” print results.

When you print photo images, Brother recommends Innobella™ glossy photo paper (BP71 series) for high quality. Brilliant prints are made easier with Innobella™ Ink and paper.

E Glossary

This is a comprehensive list of features and terms that appear in Brother manuals. Availability of these features depends on the model you purchased.

ADF (automatic document feeder)

The document can be placed in the ADF and scanned one page at a time automatically.

Brightness

Changing the Brightness makes the whole image lighter or darker.

Contrast

Setting to compensate for dark or light documents, by making copies of dark documents lighter and light documents darker.

Colour Enhancement

Adjusts the colour in the image for better print quality by improving sharpness, white balance and colour density.

Greyscale

The shades of grey available for copying and scanning.

Help list

A printout of the complete Menu table that you can use to program your machine when you do not have the User's Guide with you.

Innobella™

Innobella™ is a range of genuine consumables offered by brother. For best quality results Brother recommends Innobella™ Ink and Paper.

LCD (liquid crystal display)

The display screen on the machine that shows interactive messages during On-Screen Programming and shows the date and time when the machine is idle.

Menu mode

Programming mode for changing your machine's settings.

OCR (optical character recognition)

The bundled ScanSoft™ PaperPort™ 11SE with OCR or Presto!® PageManager® software application converts an image of text to text you can edit.

PhotoCapture Center™

Allows you to print digital photos from your digital camera at high resolution for photo quality printing.

PictBridge

Allows you to print photos directly from your digital camera at high resolution for photo quality printing.

Scan to Media

You can scan a monochrome or colour document into a memory card or USB Flash memory drive. Monochrome images can be in TIFF or PDF file format and colour images can be in PDF or JPEG file format.

Scanning

The process of sending an electronic image of a paper document into your computer.

Temporary settings

You can choose certain options for each copy without changing the default settings.

User Settings

A printed report that shows the current settings of the machine.

F Index

A

ADF (automatic document feeder) 17
Apple® Macintosh®
  See Software User's Guide on the CD-ROM. .....

C

Cleaning
  paper pick-up roller 72
  print head 73
  printer platen 72
  scanner 71
Consumable items 94
Control panel overview 6
ControlCenter
  See Software User's Guide on the CD-ROM. .....
Copy
  Enlarge/Reduce 23
  keys 22
  multiple 22
  paper 27
  Quality key 23
  single 22
  sort 25
  temporary settings 22
  using scanner glass 18
Copy Options key (copying)
  Paper Size 27
  Paper Type 27

E

Envelopes 10, 15, 16
Error messages on LCD 62
  B&W Print Only 62
  Cannot Detect 62
  Cannot Print 63
  Init. Unable 63
  Ink Low 63
  No Cartridges 63
  No Paper Fed 64
  Out of Memory 64
  Print Unable 64
  Scan Unable 64

G

Greyscale 91

H

Help
  LCD messages 78
    using menu keys 78
  Menu Table 78

I

Ink cartridges
  checking ink volume 75
  ink dot counter 68
  replacing 68
Innobella™ 94

J

Jams
  document 65
  paper 66

L

LCD (liquid crystal display) 78
  Contrast 19
  Help List 20
  Language 19

M

Macintosh®
  See Software User's Guide on the CD-ROM. .....
Maintenance, routine
  replacing ink cartridges 68
Menu Table 78
Mode, entering
  PhotoCapture 7
  Scan 6

O

Out of Memory message 64

P

Paper 13, 87
capacity 16
loading 8
size 15
size of document 17
type 15
PaperPort™ 11SE with OCR
See Software User's Guide on the CD-ROM and PaperPort™ 11SE with OCR How-to-Guides. .....
PhotoCapture Center™
Borderless 39
Cropping 39
Date Print 39
DPOF printing 35
from PC
See Software User's Guide on the CD-ROM. .....
Memory Stick Pro™ 30
Memory Stick® 30
Print settings
Brightness 37
Colour density 38
Contrast 37
Paper type & size 36
Print speed & quality 36
Quality 36
Sharpness 38
White Balance 37
Printing images 34
Printing Index 33
Scan to Media 40
SD 30
SDHC 30
specifications 89
xD-Picture Card™ 30
PictBridge
DPOF Printing 43
Presto!® PageManager®
See Help in Presto!® PageManager® to access the User's Guide. .....
Print
area 12
difficulties 58
drivers 92
improving quality 73
paper jams 66
reports 20
resolution 92
specifications 92
Printing
on small paper 11
Programming your machine 78

Q

Quality key (copying) 22

R

Reducing
copies 23
Reports
Help List 20
how to print 20
User Settings 20
Resolution
copy 88
print 92
scan 91

S

Safety Instructions 54
Scanner glass
cleaning 71
using 18
Scanning
See Software User's Guide on the CD-ROM. .....
Serial Number
how to find .....See inside front cover
Shipping the machine 76
Sleep Mode 19

F

T

Temporary copy settings 22
Transparencies 16, 87
Troubleshooting 58
  checking ink volume 75
  document jam 65
  error messages on LCD 62
  if you are having difficulty
    copying 60
    PhotoCapture Center™ 61
    printing 58
    scanning 61
    software 61
  paper jam 66
  print quality 73

W

Windows®
  See Software User's Guide on the
  CD-ROM. .....

For Australia Only:

Warranty & Repair - For details about warranty on your Brother Product, the details are listed on the following link: **www.brother.com.au** under Warranty. For warranty service (repair) of your Brother product you will need to retain a copy of your sales docket and contact the Support Centre for location of the nearest Authorised Warranty Centre (AWC)

Support - For technical support for your Brother Product other than what you can resolve through the User's Guide, please visit our website or our solutions website for FAQs/Troubleshooting, Drivers & Software, or contact the Product Support Centre for any technical or customer care/support enquiry.

Product Support Centre: Australia

Brother International (Aust) Pty Ltd

Phone: 02 8875 6000

Fax: 02 9870 7223

Email: **productsupport@brother.com.au**

Web Site: **www.brother.com.au**

Solutions Site: **http://solutions.brother.com**

brother®

Visit us on the World Wide Web
http://www.brother.com

This machine is approved for use in the country of purchase only. Local Brother companies or their dealers will only support machines purchsed in their own countries.