Basic User's Guide

MFC-L2740DW

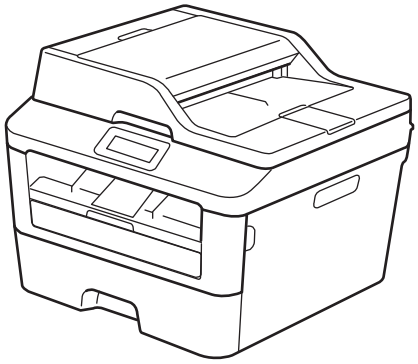

Online User's Guide
This Basic User's Guide does not contain all the information about the machine.
To learn detailed information, read the Online User's Guide at
solutions.brother.com/manuals

If you need to call Customer Service

Please complete this information for future reference:

Model Number: (Circle your model number)	**MFC-L2740DW**
Serial Number: [1]	
Date of Purchase:	
Place of Purchase:	

1 The serial number is on the back of the machine. Retain this User's Guide with your sales receipt as a permanent record of your purchase, in the event of theft, fire or warranty service.

Register your product on-line at

http://www.brother.com/html/registration

By registering your product with Brother, you will be recorded as the original owner of the product. Your registration with Brother:

- may serve as confirmation of the purchase date of your product should you lose your receipt;
- may support an insurance claim by you in the event of product loss covered by insurance; and,
- will help us notify you of enhancements to your product and special offers.

The most convenient and efficient way to register your new product is online at http://www.brother.com/html/registration.

© 2014 Brother Industries, Ltd. All rights reserved.

For the Latest Driver Updates

Go to your model's **Downloads** page on the Brother Solutions Center at http://support.brother.com to download drivers.

To keep your machine’s performance up-to-date, check there for the latest firmware upgrades.

The Online User's Guide Helps You Get the Most Out of Your Machine

Quicker navigation!

- ✓ Search box
- ✓ Navigation index in a separate panel

Comprehensive!

- ✓ Every topic in one guide

Simplified Layout!

- ✓ Provides step-by-step instructions
- ✓ Feature summary at the top of the page

1. Search Box 2. Navigation 3. Summary 4. Step-by-Step

Where can I find this manual?

(Windows®)

Click **(Start)** > **All Programs** > **Brother** > **Brother Utilities** > **Brother MFC-XXXX series** > **Support** > **User's Guides**.

(Windows® 8)

Tap or click **(Brother Utilities)** > **Brother MFC-XXXX series** > **Support** > **User's Guides**.

(Select your model from the drop-down list if not already selected.)

(Macintosh or other options)

Go to your model's **Manuals** page on the Brother Solutions Center at http://support.brother.com to download manuals.

If you have questions or problems, please take a look at our FAQs.

Provides several ways to search!

Displays related questions for more information

Receives regular updates based on customer feedback

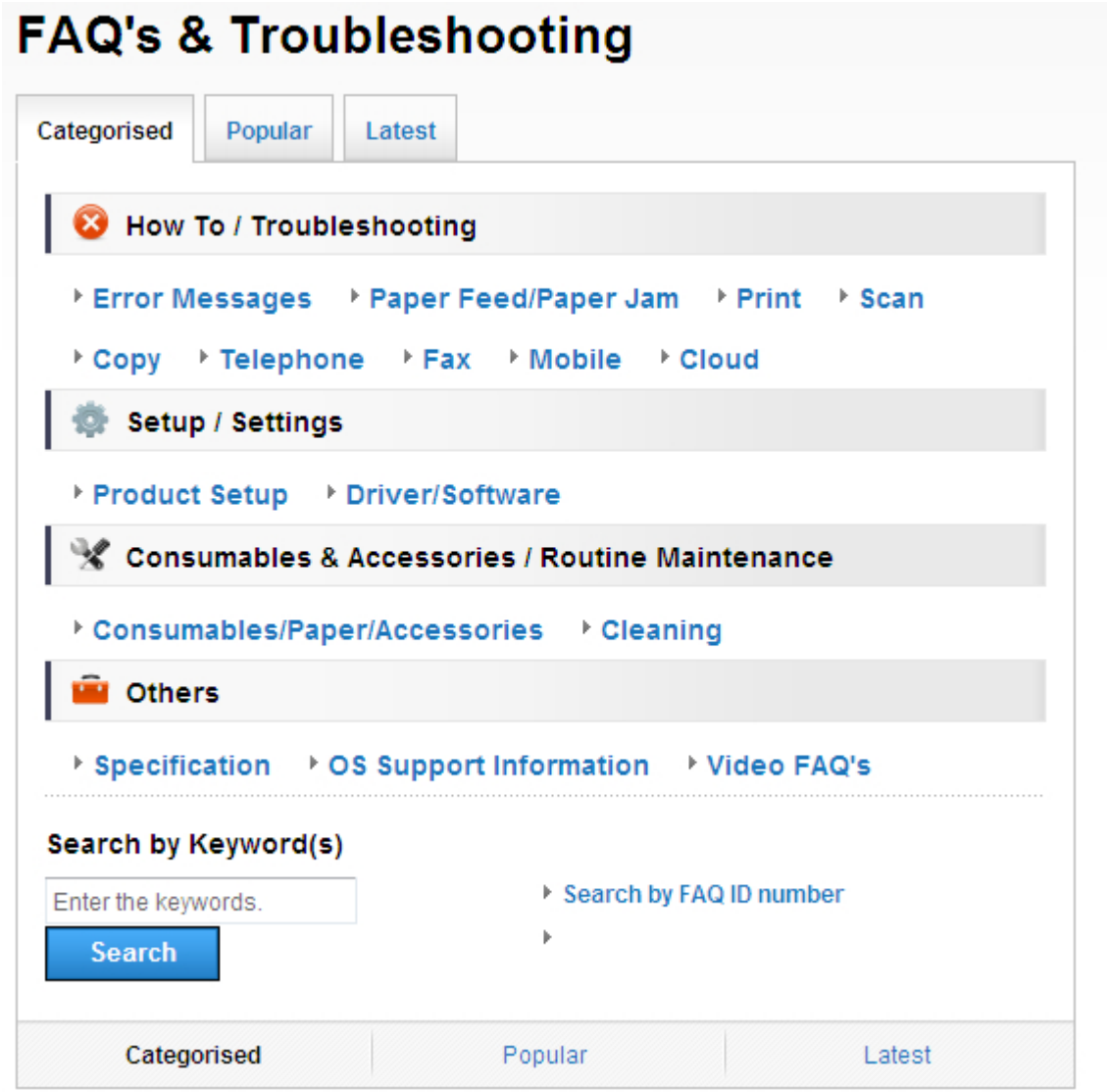

Since the Brother Solutions Center is updated regularly, this screen shot is subject to change without notice.

Where can I find these FAQs?

Brother Solutions Center

http://support.brother.com

Definitions of Notes

We use the following symbols and conventions throughout this User's Guide:

⚠ WARNING

WARNING indicates a potentially hazardous situation which, if not avoided, could result in death or serious injuries.

⚠ CAUTION

CAUTION indicates a potentially hazardous situation which, if not avoided, may result in minor or moderate injuries.

IMPORTANT

IMPORTANT indicates a potentially hazardous situation which, if not avoided, may result in damage to property or loss of product functionality.

NOTE

NOTE specifies the operating environment, conditions for installation, or special conditions of use.

Tips icons provide helpful hints and supplementary information.

Electrical Hazard icons alert you to possible electrical shock.

Fire Hazard icons alert you to the possibility of a fire.

Hot Surface icons warn you not to touch hot machine parts.

Prohibition icons indicate actions you must not perform.

Bold

Bold style identifies buttons on the machine's control panel or computer screen.

Italics

Italicized style emphasizes an important point or refers you to a related topic.

`Courier New`

Courier New font identifies messages shown on the machine's LCD.

Compilation and Publication Notice

This manual has been compiled and published to provide the latest product safety information at the time of publication. The information contained in this manual may be subject to change.

For the latest manual, visit us at http://support.brother.com.

Table of Contents

Basic User's Guide

1 General Information 1

Control Panel Overview 1

Touchscreen LCD Overview 3

How to Navigate the Touchscreen LCD 4

Access Brother Utilities 6

Initial Setup 7
- Set the Date and Time 7
- Adjust the Ring Volume 7
- Adjust the Beeper Volume 7
- Adjust the Speaker Volume 7

2 Paper Handling 8

Load Paper 8
- Load and Print using the Paper Tray 8
- Set the Check Size 9

Change the Paper Size 9

Change the Paper Type 10

Using Special Paper 10

3 Print 11

Print from Your Computer (Windows®) 11
- Print a Document (Windows®) 11
- Print on Both Sides of the Paper (Windows®) 11
- Print More Than One Page on a Single Sheet of Paper (N in 1) (Windows®) 12
- Printing on Envelopes, Thick Paper, or Labels 13
- Printing on Plain Paper, Thin Paper, Recycled Paper, or Bond Paper using the Manual Feed Slot 15

4 Copy 17

Copy a Document 17

Copy Settings 18
- Copy Option 18
- Copy Multiple Pages on Both Sides of the Paper 20
- Copy a 2-sided Document Using the ADF 21
- Copy a 2-sided Document Using the Scanner Glass 22
- Copy Both Sides of an ID Card onto One Page 23

5 Scan 25

Scan from Your Computer (Windows®) 25
Save Scanned Documents and Photos to a Folder as a PDF File Using ControlCenter4 Advanced Mode (Windows®) 25

Scan Using the Scan Button on Your Brother Machine 26
Scan Using the Scan Button on the Machine 26

6 Fax 28

Before Faxing 28
Set Your Station ID 28
Set Telephone Line Compatibility for Interference and VoIP Systems 29
Receive Modes 29
Choose the Correct Receive Mode 31
Set the F/T Ring Time (Fast Double-ring) 32
Set the Number of Rings Before the Machine Answers (Ring Delay) 32

Store Numbers 33
Store Address Book Numbers 33
Change or Delete Address Book Names or Numbers 33

Telephone Services and External Devices 34
Voice Mail 34
Voice Over Internet Protocol (VoIP) 34
Connection of an External Telephone Answering Device (TAD) 34
External and Extension Telephones 34

Send and Receive a Fax Using Your Machine 35
Send a Fax 35

Fax Using Your Computer (PC-FAX) 37
Send Faxes from Your Computer 37
Receive Faxes on Your Computer (Windows® only) 37

A Troubleshooting 39

Identify the Problem 39

Error and Maintenance Messages 40

Fax and Telephone Problems 44
Troubleshooting for Other Fax Problems 45

Print or Scan Problems 46

Document and Paper Jams 48
Find the Jammed Document or Paper 48
Clear the Document Jam 48
Clear the Paper Jam 49

B Appendix 56

How to Enter Text on Your Brother Machine 56

Supplies 57

C Index 58

1 General Information

Control Panel Overview

1. **Touchscreen Liquid Crystal Display (LCD)**

   Access menus and options by pressing them on this Touchscreen.

2. **Touchpanel**

   (Back)

   Press to go back to the previous menu.

   (Home)

   Press to return to the Home screen.

   (Cancel)

   Press to cancel an operation (available when illuminated in red).

   Dial Pad (Numerical buttons)

   Press the numbers on the Touchpanel to dial telephone or fax numbers and to enter the number of copies.

3. **Power On/Off**

   - Turn on the machine by pressing .
   - Turn off the machine by pressing and holding down . The Touchscreen LCD displays `Shutting Down` and stays on for a few seconds before turning off. If you have an external telephone or TAD connected, it is always available.

4. **(WiFi)**

When the **WiFi** light is on, your Brother machine is connected to a wireless access point.
When the **WiFi** light blinks, the wireless connection is down, or your machine is in the process of connecting to a wireless access point.

Touchscreen LCD Overview

Access the mode button you want by pressing ◀ or ▶.

From the Home screens, you can access Wi-Fi setup, Shortcuts, Toner level and Settings screens.

This screen displays the machine's status when the machine is idle. This Home screen is also called the Ready Mode screen. When displayed, this indicates that your machine is Ready for the next command.

The available features will vary depending on your model.

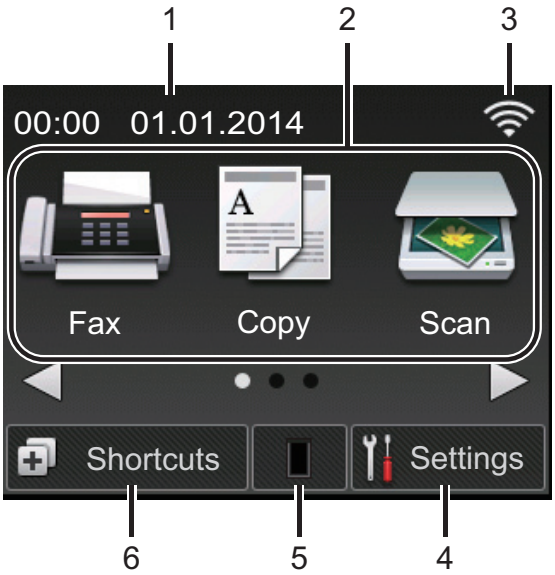

1. **Date & Time**

   Displays the date and time set on the machine.

2. **Modes**

   - **Fax**

     Press to access Fax mode.

   - **Copy**

     Press to access Copy mode.

   - **Scan**

     Press to access Scan mode.

   - **Web**

     Press to connect the Brother machine to an Internet service. For more information, see the *Web Connect Guide*. Go to your model's **Manuals** page on the Brother Solutions Center at http://support.brother.com to download the guide.

   - **Apps**

     Press to connect the Brother machine to the Brother Apps service. For more information, see the *Web Connect Guide*. Go to your model's **Manuals** page on the Brother Solutions Center at http://support.brother.com to download the guide.

   - **Secure Print**

     Press to access the Secure Print option.

   - **2in1(ID) Copy**

     Press to access 2in1(ID) Copy option.

3. **Wireless Status**

   If you are using a wireless connection, a four-level indicator in each of the Home screens displays the current wireless signal strength.

   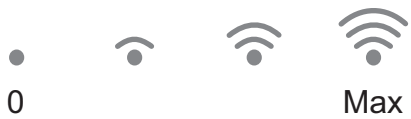

   - If you see WiFi at the top on the screen, press it to configure wireless settings.

4. **Settings**

   Press to access the Settings menu.

   If Secure Function Lock or Setting Lock has been turned on, a lock icon appears on the LCD. You must unlock the machine to use Settings.

5. **Toner**

   Displays the remaining toner life. Press to access the `Toner` menu.

   When the Toner cartridge is near the end of life or has a problem, an error icon appears on the Toner icon.

6. **`Shortcuts`**

   Press to create Shortcuts for frequently-used operations such as sending a fax, making a copy, scanning and using Web Connect.

- Three Shortcuts screens are available with up to four Shortcuts on each Shortcuts screen. A total of 12 Shortcuts are available.
- To display the other Shortcuts screens, press ◄ or ►.

Stored Fax(es)

The number of received faxes in memory appears at the top of the screen.

Press Print to print the faxes.

Warning icon

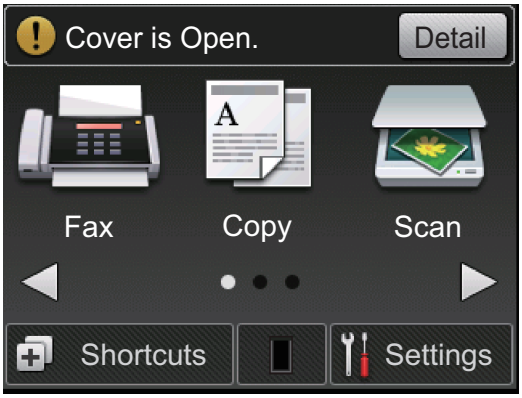

The warning icon appears when there is an error or maintenance message; press Detail to view it, and then press to return to Ready Mode.

NOTE

- This product adopts the font of ARPHIC TECHNOLOGY CO., LTD.

How to Navigate the Touchscreen LCD

Press your finger on the LCD to operate it. To display and access all the options, press ◄► or ▲▼ on the LCD to scroll through them.

The following steps explain how to navigate through changing a machine setting. In this example, the LCD Backlight setting is changed from `Light` to `Med`.

IMPORTANT

DO NOT press the LCD with a sharp object such as a pen or stylus. It may damage the machine.

NOTE

DO NOT touch the LCD immediately after plugging in the power cord or turning on the machine. Doing this may cause an error.

1 Press (Settings).

2 Press All Settings.

3 Press ▲ or ▼ to display the General Setup option, and then press General Setup.

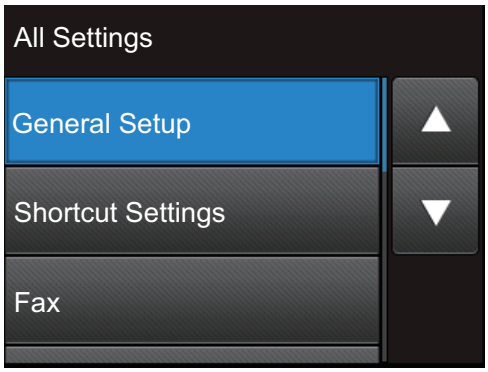

4 Press ▲ or ▼ to display the LCD Settings option, and then press LCD Settings.

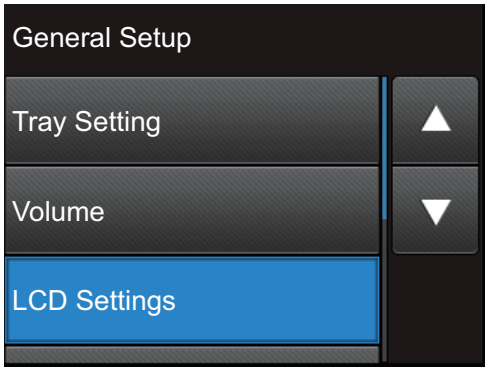

5 Press Backlight.

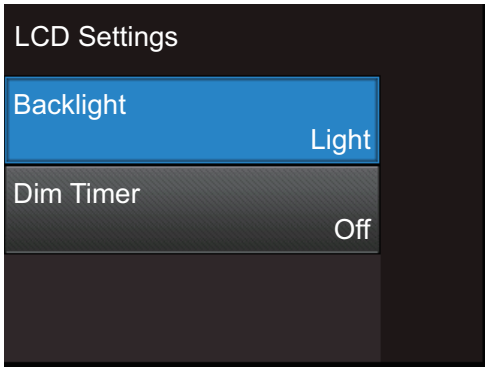

6 Press Med.

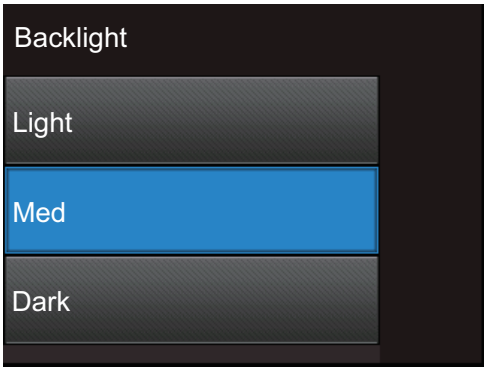

7 Press .

Access Brother Utilities

Brother Utilities is an application launcher that offers convenient access to all Brother applications installed on your device.

1 Do one of the following:

- (Windows® XP, Windows Vista®, Windows® 7, Windows Server® 2003, Windows Server® 2008 and Windows Server® 2008 R2)

  Click **Start** > **All Programs** > **Brother** > **Brother Utilities**.

- (Windows® 8 and Windows Server® 2012)

  Tap or Click (**Brother Utilities**) either on the **Start** screen or the desktop.

- (Windows® 8.1 and Windows Server® 2012 R2)

  Move your mouse to the lower left corner of the **Start** screen and click (if you are using a touch-based device, swipe up from the bottom of the **Start** screen to bring up the **Apps** screen). When the **Apps** screen appears, tap or click (**Brother Utilities**).

2 Select **Brother MFC-XXXX series** (where XXXX is the name of your model).

3 Select the operation you want to use.

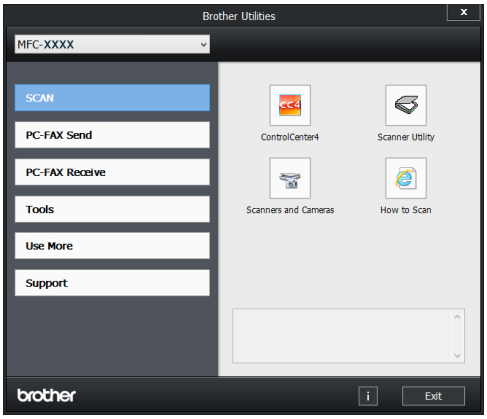

Initial Setup

Set the Date and Time

1. Press (Settings) > All Settings > Initial Setup > Date & Time > Date.
2. Enter the last two digits of the year using the LCD, and then press OK.
3. Enter the two digits for the month using the LCD, and then press OK.
4. Enter the two digits for the day using the LCD, and then press OK.
5. Press Time.
6. Enter the time (in 24-hour format) using the LCD, and then pressOK.

   (For example: enter 19:45 for 7:45 PM.)
7. Press .

Adjust the Ring Volume

1. Press (Settings) > All Settings > General Setup > Volume > Ring.
2. Press ▲ or ▼ to display the Off, Low, Med, or High option, and then press the option you want.
3. Press .

Adjust the Beeper Volume

When the beeper is on, the machine will beep when you press a button, make a mistake, or after you send or receive a fax. You can choose from a range of volume levels.

1. Press (Settings) > All Settings > General Setup > Volume > Beep.
2. Press ▲ or ▼ to display the Off, Low, Med, or High option, and then press the option you want.
3. Press .

Adjust the Speaker Volume

1. Press (Settings) > All Settings > General Setup > Volume > Speaker.
2. Press ▲ or ▼ to display the Off, Low, Med, or High option, and then press the option you want.
3. Press .

2 Paper Handling

Load Paper

Load and Print using the Paper Tray

- If the Check Size setting is set to On and you pull the paper tray out of the machine, a message appears on the LCD asking if you want to change the paper size. Change the paper size and paper type settings if needed, following the on-screen instructions.
- When you load a different paper size in the tray, you must change the paper size setting in the machine or on your computer at the same time.

1 Pull the paper tray completely out of the machine.

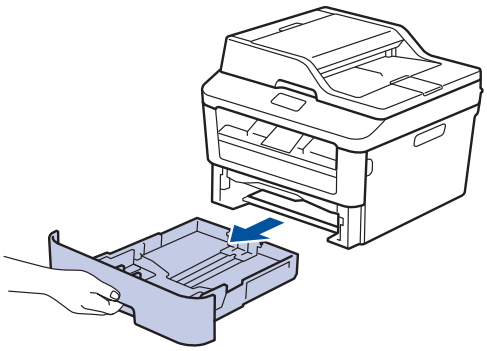

2 Press and slide the paper guides to fit the paper.

Press the green release levers to slide the paper guides.

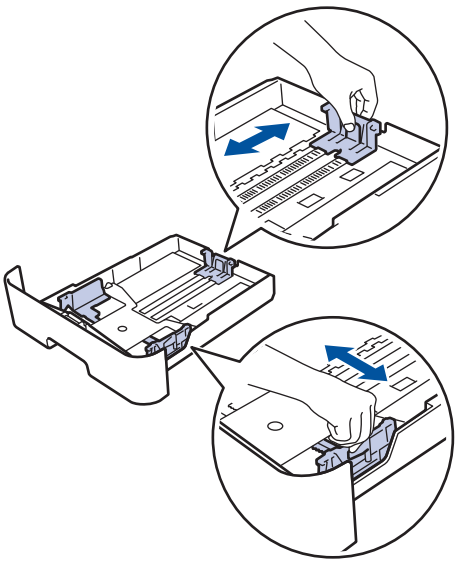

For Legal or Folio size paper, press the release button (1) in the bottom of the paper tray and then pull out the back of the paper tray. (Legal and Folio size paper are not available in some regions.)

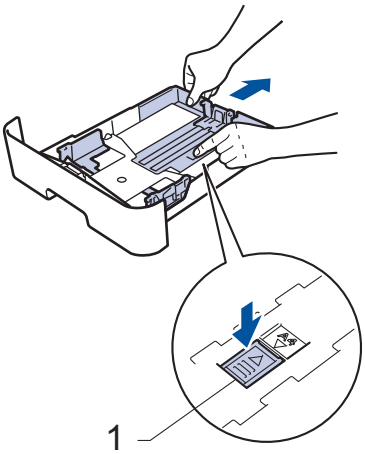

3 Fan the stack of paper well.

4 Load paper with the printing surface *face down* in the paper tray.

DO NOT load different types of paper in the paper tray at the same time. Doing this may cause the paper to jam or misfeed.

5 Make sure the paper is below the maximum paper mark (▼▼▼).

Overfilling the paper tray will cause paper jams.

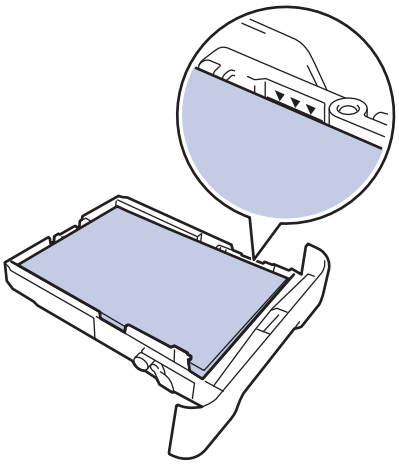

6 Slowly push the paper tray completely into the machine.

7 Lift the support flap to prevent paper from sliding off the output tray.

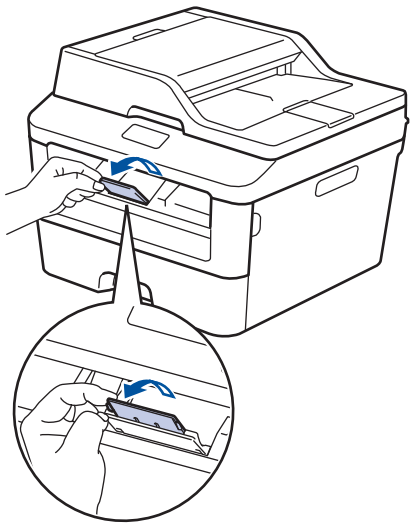

8 Send your print job to the machine.

Change your print preferences in the Print dialog box before sending the print job from your computer.

Set the Check Size

Your Brother machine's Check Size setting causes the machine to display a message when you remove the paper tray from the machine, asking if you changed the paper size.

The default setting is On.

1 Press (Settings) > All Settings > General Setup > Tray Setting > Check Size.

2 Press On or Off.

3 Press .

Change the Paper Size

When you change the size of the paper you load in the tray, you must change the paper size setting on the LCD at the same time.

1 Press (Settings) > All Settings > General Setup > Tray Setting > Paper Size.

2 Press ▲ or ▼ to display the A4, Letter, A5, A5 L, A6, Executive, Legal or Folio option, and press the option you want.

3 Press .

Change the Paper Type

To get the best print quality, set the machine for the type of paper you are using.

1. Press (Settings) > All Settings > General Setup > Tray Setting > Paper Type.
2. Press ▲ or ▼ to display the Thin, Plain Paper, Thick, Thicker or Recycled Paper option, and press the option you want.
3. Press .

Using Special Paper

Always test paper samples before purchasing them to ensure desirable performance.

- DO NOT use inkjet paper; it may cause a paper jam or damage your machine.
- If you use bond paper, paper with a rough surface, or paper that is wrinkled or creased, the paper may exhibit degraded performance.

IMPORTANT

Some types of paper may not perform well or may cause damage to your machine.

DO NOT use paper:

- that is highly textured
- that is extremely smooth or shiny
- that is curled or warped
- that is coated or has a chemical finish
- that is damaged, creased or folded
- that exceeds the recommended weight specification in this guide
- with tabs and staples
- with letterheads using low temperature dyes or thermography
- that is multipart or carbonless
- that is designed for inkjet printing

If you use any of the types of paper listed above, they may damage your machine. This damage is not covered under any Brother warranty or service agreement.

3 Print

Print from Your Computer (Windows®)

Print a Document (Windows®)

1. Select the print command in your application.
2. Select **Brother MFC-XXXX series** (where XXXX is the name of your model).
3. Click **OK**.
4. Complete your print operation.

For more information, see the *Online User's Guide*: *Print a Document*

Print on Both Sides of the Paper (Windows®)

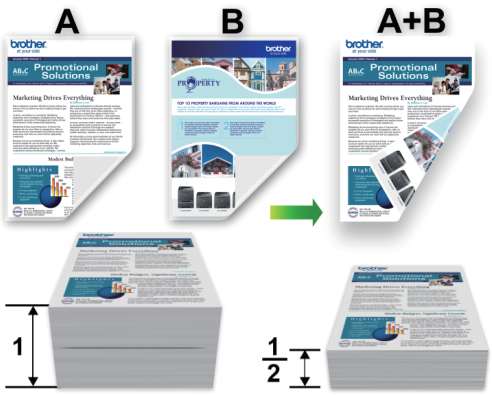

- Select A4 size paper when using the automatic 2-sided printing option.

1. Select the print command in your application.
2. Select **Brother MFC-XXXX series** (where XXXX is the name of your model), and then click the printing properties or preferences button.

   The printer driver window appears.
3. Click the **2-sided / Booklet** drop-down list and select the **2-sided** option.
4. Click the **2-sided Settings** button.
5. Select an option from the **2-sided Type** menu.
6. Click **OK**.

7 Click **OK** again, and then complete your print operation.

Print More Than One Page on a Single Sheet of Paper (N in 1) (Windows®)

1 Select the print command in your application.

2 Select **Brother MFC-XXXX series** (where XXXX is the name of your model), and then click the printing properties or preferences button.

The printer driver window appears.

3 Click the **Multiple Page** drop-down list and select the **2 in 1**, **4 in 1**, **9 in 1**, **16 in 1**, or **25 in 1** option.

4 Click **OK**.

5 Complete your print operation.

Printing on Envelopes, Thick Paper, or Labels

When the back cover (face-up output tray) is pulled down, the machine has a straight paper path from the manual feed slot on the front of the machine through the back of the machine and onto the face-up output tray. Use this manual feed and output method for printing on thick paper or envelopes.

- Load the paper or envelope into the manual feed slot with the printing surface face up.
- DO NOT load more than one sheet of paper or one envelope in the manual feed slot at any one time. Doing this may cause a jam.

1 Open the back cover (face-up output tray).

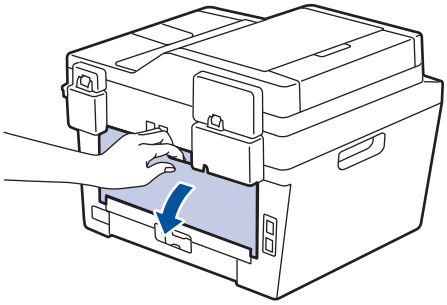

2 (For printing envelopes) Pull down the two green levers, one on the left side and one on the right side, to the envelope position as shown in the illustration.

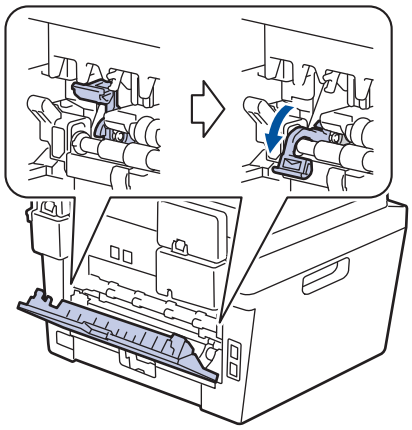

3 On the front of the machine, open the manual feed slot cover.

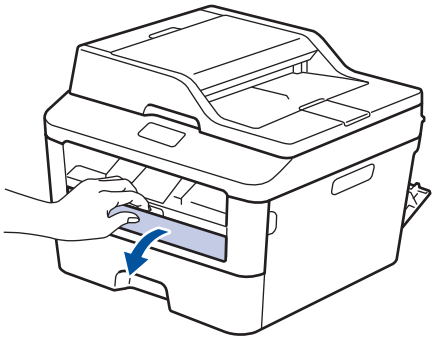

4 Slide the manual feed slot paper guides to the width of the paper.

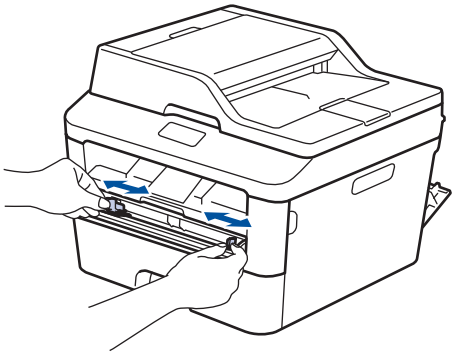

5 Push one sheet of paper or one envelope firmly into the manual feed slot.

Continue pushing the paper until the top edge of the paper presses against the rollers for about two seconds, or until the machine grabs the paper and pulls it in further.

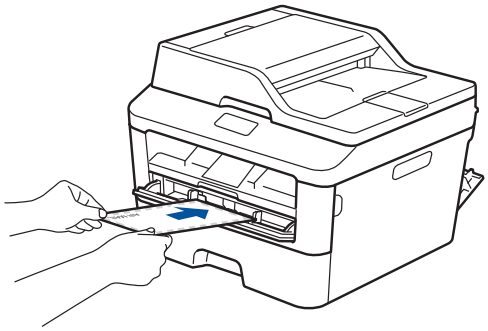

6 Select the print command in your application.

7 Select **Brother MFC-XXXX series** (where XXXX is the name of your model), and then click the printing properties or preferences button.

The printer driver window appears.

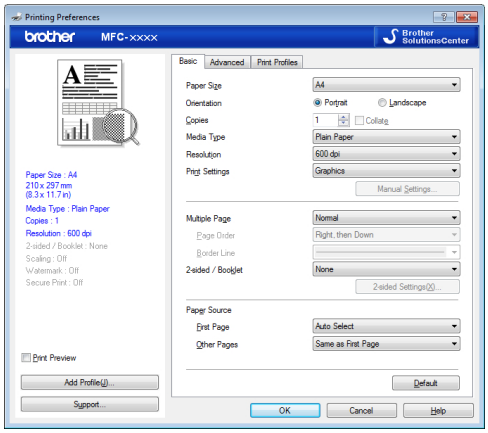

8 Click the **Paper Size** drop-down list and select your paper size.

9 Click the **Media Type** drop-down list and select the type of paper you are using.

10 Click the **First Page** and **Other Pages** drop-down lists and select **Manual**.

11 Click the **Portrait** or **Landscape** option to set the orientation of your printout.

12 Change other printer settings if needed.

13 Click **OK**.

14 Click **Print**.

15 (For printing envelopes) When you have finished printing, return the two green levers back to their original positions.

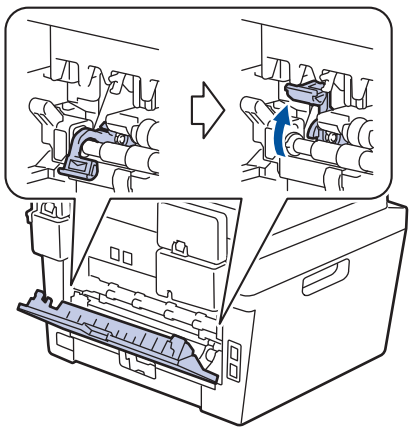

Printing on Plain Paper, Thin Paper, Recycled Paper, or Bond Paper using the Manual Feed Slot

- Load the paper into the manual feed slot with the printing surface face up.
- DO NOT load more than one sheet of paper in the manual feed slot at any one time. Doing this may cause a jam.

1 Lift up the support flap to prevent paper from sliding off the face-down output tray, or remove each page as soon as it comes out of the machine.

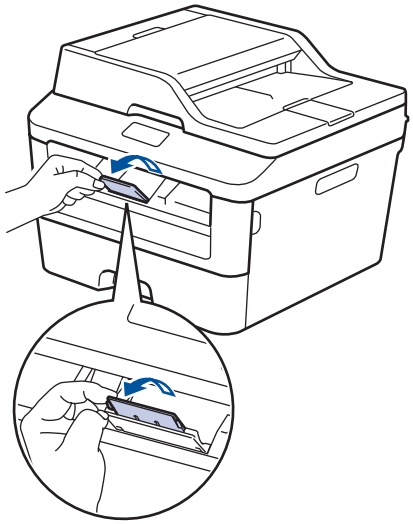

2 Open the manual feed slot cover.

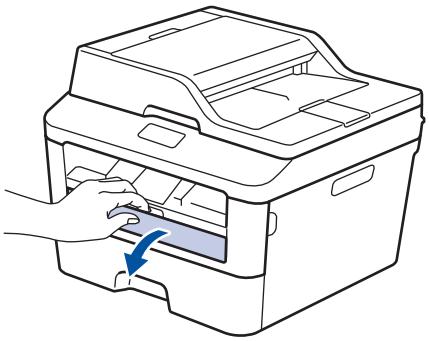

3 Slide the manual feed slot paper guides to the width of the paper.

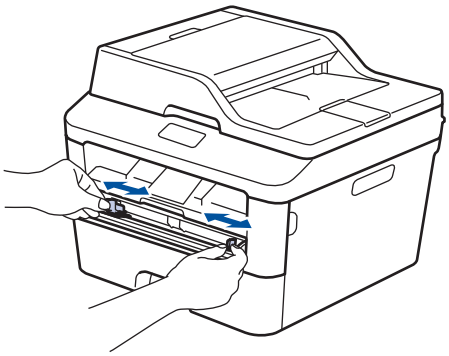

4 Push one sheet of paper firmly into the manual feed slot.

Continue pushing the paper until the top edge of the paper presses against the rollers for about two seconds, or until the machine grabs the paper and pulls it in further.

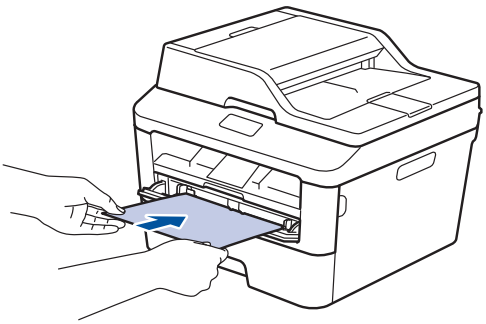

5 Select the print command in your application.

6 Select **Brother MFC-XXXX series** (where XXXX is the name of your model), and then click the printing properties or preferences button.

The printer driver window appears.

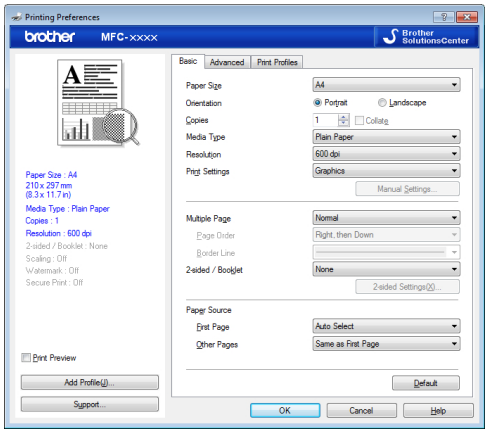

7 Click the **Paper Size** drop-down list and select your paper size.

8 Click the **Media Type** drop-down list and select the type of paper you are using.

9 Click the **First Page** and **Other Pages** drop-down list and select **Manual**.

10 Click the **Portrait** or **Landscape** option to set the orientation of your printout.

11 Change other printer settings if needed.

12 Click **OK**.

13 Click **Print**.

4 Copy

Copy a Document

1 Make sure you have loaded the correct size paper in the paper tray.

2 Do one of the following:

- Place the document *face up* in the ADF.

  (If you are copying multiple pages, we recommend using the ADF.)

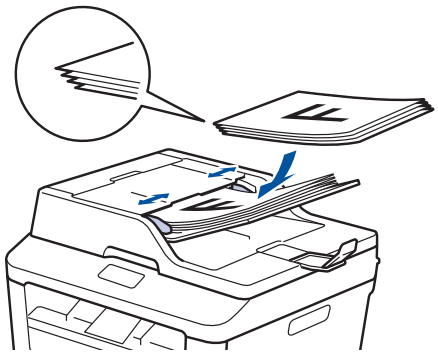

- Place the document *face down* on the scanner glass.

3 Press (Copy).

The LCD displays:

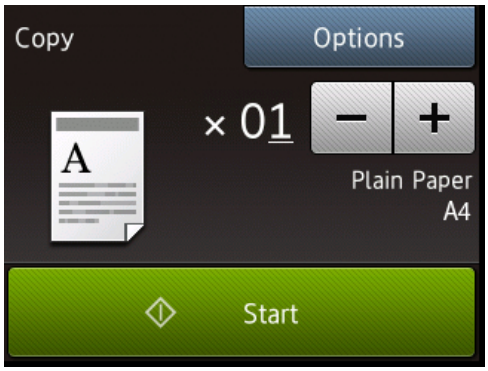

4 To enter the number of copies you want, do one of the following:

- Press − or + using the LCD.
- Use the dial pad.
- Press × 01 to display numeric keypad on the LCD, and then enter the number of copies. Press OK.

5 Press Start.

Copy Settings

Copy Option

To change Copy settings, press Options.

Menu selections	Options	
Quality	Auto Text Photo Receipt	
Enlarge/Reduce	100%	-
	Enlarge	Choose an enlargement ratio for the next copy.
	Reduce	Choose a reduction ratio for the next copy.
	Auto	Adjust the copy size automatically to the paper size you set.
	Custom(25-400%)	Enter an enlargement or reduction ratio.
Density	Increase the density to make the text darker. Decrease the density to make the text lighter.	
Contrast	Increase the contrast to make an image clearer. Decrease the contrast to make an image more subdued.	
Stack/Sort	Stack 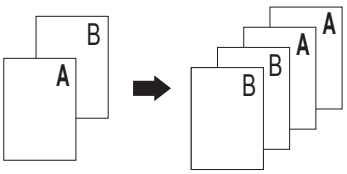	Sort 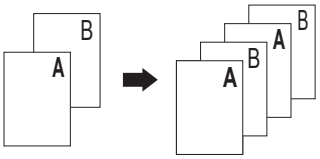
Page Layout	Off(1in1) 2in1(P) 2in1(L) 4in1(P) 4in1(L)	
2-sided Copy	Enable or disable 2-sided copying and select long edge or short edge. The available options will vary depending on your model.	

Menu selections	Options
`2-sided Copy Page Layout` (available only for certain settings)	Select long edge or short edge.
`Save as Shortcut`	Add the current settings as a shortcut.

Copy Multiple Pages on Both Sides of the Paper

You must choose a 2-sided copy layout from the following options before you can start 2-sided copying:

Portrait

1–sided > 2–sided Long Edge Flip

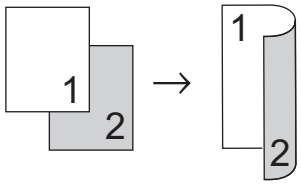

1–sided > 2–sided Short Edge Flip

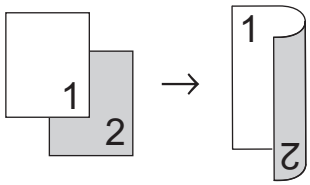

Landscape

1–sided > 2–sided Long Edge Flip

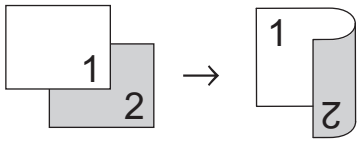

1–sided > 2–sided Short Edge Flip

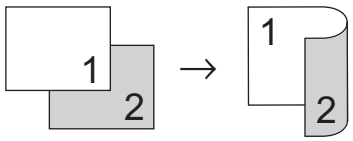

1 Make sure you have loaded the correct size paper in the paper tray.

2 Do one of the following:

- Place the document *face up* in the ADF.

  (If you are copying multiple pages, we recommend using the ADF.)

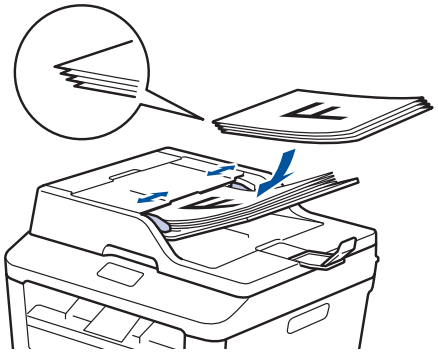

- Place the document *face down* on the scanner glass.

3 Press (Copy).

4 Enter the number of copies.

5 Press Options.

6 Press ▲ or ▼ to display the 2-sided Copy option, and then press 2-sided Copy.

7 Press ▲ or ▼ to display the following layout options, and then press the option you want.

- `1-sided->2-sided Long Edge Flip`
- `1-sided->2-sided Short Edge Flip`

8 Press `OK`.

9 Press `Start` to scan the page.

If you are copying using the ADF, the machine feeds and scans the pages and starts printing.

If you are copying using the scanner glass, go to the next step.

10 After the machine scans the page, press the `Scan` or `Complete` option.

Option	Description
`Scan`	Press `Scan` to scan the next page. Place the next page on the scanner glass, and then press `OK`.
`Complete`	Press `Complete` when you have scanned all the pages.

DO NOT touch the printed page until it is ejected the second time. The machine will print the first side and eject the paper, and then pull the paper back in to print the second side.

Copy a 2-sided Document Using the ADF

You must choose a 2-sided copy layout from the following options before you can start 2-sided copying.

Portrait

2–sided > 2–sided

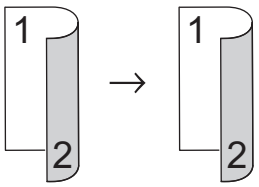

Landscape

2–sided > 2–sided

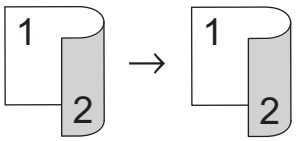

1 Make sure you have loaded the correct size paper in the paper tray.

2 Place your document *face up* in the ADF.

3 Press (`Copy`).

4 Enter the number of copies.

5 Press `Options`.

6 Press ▲ or ▼ to display the `2-sided Copy` option, and then press `2-sided Copy`.

7 Press ▲ or ▼ to display the `2-sided -> 2-sided` option, and then press `2-sided -> 2-sided`.

8 Press `OK`.

9 Press Start to scan the page.

The machine feeds and scans the pages and starts printing.

Copy a 2-sided Document Using the Scanner Glass

You must choose a 2-sided copy layout from the following options before you can start 2-sided copying.

Portrait

2–sided > 2–sided

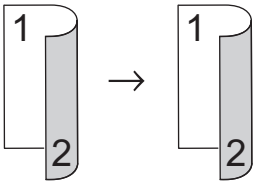

Landscape

2–sided > 2–sided

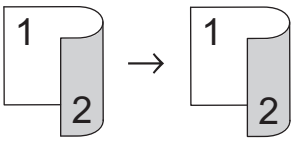

1 Make sure you have loaded the correct size paper in the paper tray.

2 Place your document *face down* on the scanner glass.

3 Press (Copy).

4 Enter the number of copies.

5 Press Options.

6 Press ▲ or ▼ to display the 2-sided Copy option, and then press 2-sided Copy.

7 Press ▲ or ▼ to display the following layout options, and then press the option you want.

- 1-sided -> 2-sided Long Edge Flip
- 1-sided -> 2-sided Short Edge Flip

8 Press OK.

9 Press Start to scan the page.

10 After the machine scans the page, press the Scan or Complete option.

Option	Description
Scan	Press Scan to scan the next page. Place the next page on the scanner glass, and then press OK.
Complete	Press Complete when you have scanned all the pages.

Copy Both Sides of an ID Card onto One Page

Use the 2in1 (ID) Copy feature to copy both sides of an identification card onto one page, keeping the original card size.

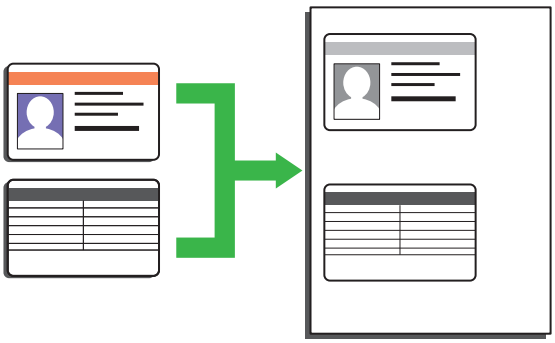

- Copy an identification card only to the extent permitted under applicable laws. For more information, see the *Product Safety Guide*.

1 Place your identification card *face down* near the upper left corner of the scanner glass.

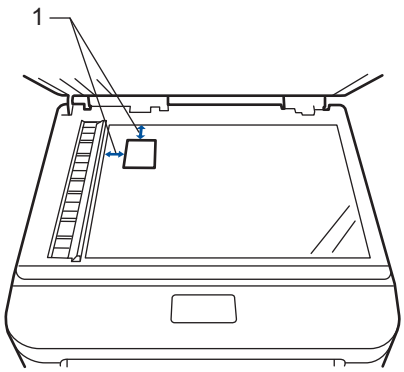

1 4.0 mm or greater (top, left)

2 Press ◀ or ▶ to display the 2in1 (ID) Copy option, and then press 2in1 (ID) Copy.

3 Enter the number of copies.

4 Press Start.

The machine scans one side of the identification card.

5 After the machine has scanned the first side, press Yes.

6 Turn over the identification card and press OK to scan the other side.

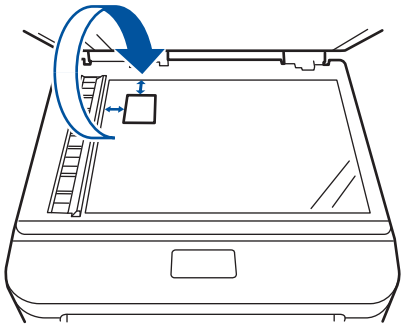

5 Scan

Scan from Your Computer (Windows®)

There are several ways you can use your computer to scan photos and documents on your Brother machine. Use the software applications provided by Brother, or use your favourite scanning application.

Save Scanned Documents and Photos to a Folder as a PDF File Using ControlCenter4 Advanced Mode (Windows®)

Scan documents and save them to a folder on your computer as PDF files.

1 Load your document.

2 Click **Start** > **All Programs** > **Brother** > **Brother Utilities**, and then click the drop-down list and select your model name (if not already selected). Click **SCAN** in the left navigation bar, and then click **ControlCenter4**. The ControlCenter4 application opens.

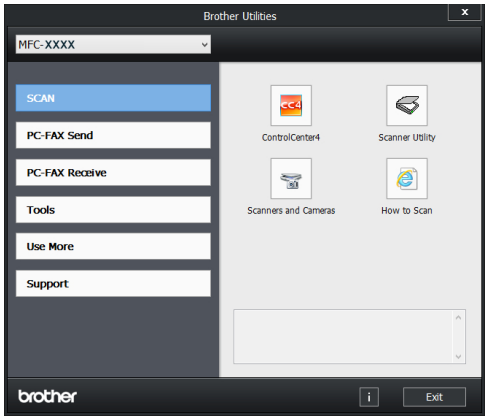

3 When you open the ControlCenter4 application at the first time, select the display mode.

4 Click the **Scan** tab.

5 Click the **File** button.

The scan settings dialog box appears.

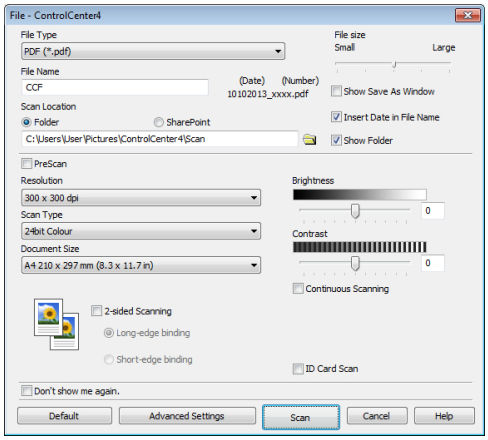

6 Change the scan settings if needed, and then click **Scan**.

The machine scans the document and saves the file in the folder you have selected. The folder opens automatically.

For more information, see the *Online User's Guide*: *Scan from Your Computer*

Scan Using the Scan Button on Your Brother Machine

Scan Using the Scan Button on the Machine

1 Do one of the following:

- Place the document *face up* in the ADF.

  (If you are scanning multiple pages, we recommend using the ADF.)

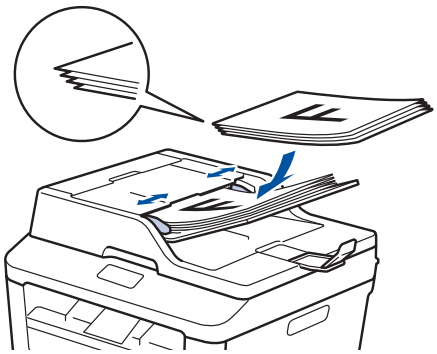

- Place the document *face down* on the scanner glass.

2 Press (Scan).

3 Press ◄ or ► to display the Scan mode icon.

The icon is highlighted and moves to the middle of the LCD.

Option	Description
	Press this button to scan documents and save them to a folder on your computer.

For other Scan options, see the *Online User's Guide*: *Scan Using the Scan Button on Your Brother Machine*

4 Press (`to File`).

5 If the machine is connected to a network, press ▲ or ▼ to display the computer where you want to send the document, and then press the computer name.

6 Do one of the following:

- To change the settings, press `Options`, and then go to the next step.
- To use the default settings, press `Start`.

  The machine scans the document.

7 Select the scan settings you want to change:

- `2-sided Scan`
- `Scan Settings`
- `Scan Type`
- `Resolution`
- `File Type`
- `Scan Size`
- `Remove Background Colour`

  (available only for the `Colour` and `Grey` options.)

8 Make the changes you want, and then press `OK`.

9 Press `Start`.

The machine scans the document.

NOTE

Use the Scan button on the machine to make temporary changes to the scan settings. To make permanent changes, use Brother's ControlCenter software.

6 Fax

Before Faxing

Set Your Station ID

Set the machine to print your Station ID and the fax's date and time at the top of each fax you send.

1. Press (Settings) > All Settings > Initial Setup > Station ID > Fax.
2. Enter your fax number (up to 20 digits) using the LCD, and then press OK.
3. Press Tel.
4. Enter your telephone number (up to 20 digits) using the LCD, and then press OK.
5. Press Name.
6. Enter your name (up to 20 characters) using the LCD, and then press OK.

- Press A 1 @ to cycle between letters, numbers and special characters. (The characters available may differ depending on your country.)
- If you enter an incorrect character, press ◀ or ▶ to move the cursor to it and press ⌫. Press the correct character.
- To enter a space, press Space.
- For more information, see *Related Information*.

7. Press .

Related Information

- How to Enter Text on Your Brother Machine on page 56

Set Telephone Line Compatibility for Interference and VoIP Systems

Problems sending and receiving faxes due to possible interference on the telephone line may be solved by lowering the modem speed to minimize errors in fax transmission. If you are using a Voice over IP (VoIP) service, Brother recommends changing the compatibility to Basic (for VoIP).

- VoIP is a type of phone system that uses an Internet connection, rather than a traditional phone line.

1 Press (Settings) > All Settings > Initial Setup > Compatibility.

2 Press High, Normal or Basic (for VoIP).

Option	Description
High	Select High to set the modem speed at 33600 bps.
Normal	Select Normal to set the modem speed at 14400 bps.
Basic (for VoIP)	Select Basic (for VoIP) to reduce the modem speed to 9600 bps and turn off Error Correction Mode (ECM). Unless interference is a recurring problem on your telephone line, you may prefer to use it only when needed. To improve compatibility with most VoIP services, Brother recommends changing the compatibility setting to Basic (for VoIP).

3 Press .

Related Information

- Fax and Telephone Problems on page 44

Receive Modes

Some receive modes answer automatically (Fax Only Mode and Fax/Tel Mode). You may want to change the Ring Delay before using these modes.

Fax Only Mode

(Fax or Fax only in the Machine's Menu)

Fax Only Mode automatically answers every call as a fax.

Fax/Tel Mode

(Fax/Tel in the Machine's Menu)

Fax/Tel Mode helps you manage incoming calls, by recognising whether they are fax or voice calls and handling them in one of the following ways:

- Faxes will be received automatically.
- Voice calls will start the F/T ring to tell you to pick up the call. The F/T ring is a fast pseudo/double-ring made by your machine.

Manual Mode

(Manual in the Machine's Menu)

To receive a fax in Manual Mode lift the handset of the external telephone.

When you hear fax tones (short repeating beeps), press Fax Start and then Receive to receive a fax. Use the Fax Detect feature to receive faxes when you have lifted a handset on the same line as the machine.

External TAD Mode

(External TAD in the Machine's Menu)

External TAD Mode lets an external answering device manage your incoming calls.

Incoming calls will be handled in the following ways:

- Faxes will be received automatically.
- Voice callers can record a message on the external TAD.

Related Information

- Fax and Telephone Problems on page 44

Choose the Correct Receive Mode

You must choose a Receive Mode depending on the external devices and telephone services you have on your line.

By default, your machine will automatically receive any faxes that are sent to it. The diagram below will help you select the correct mode.

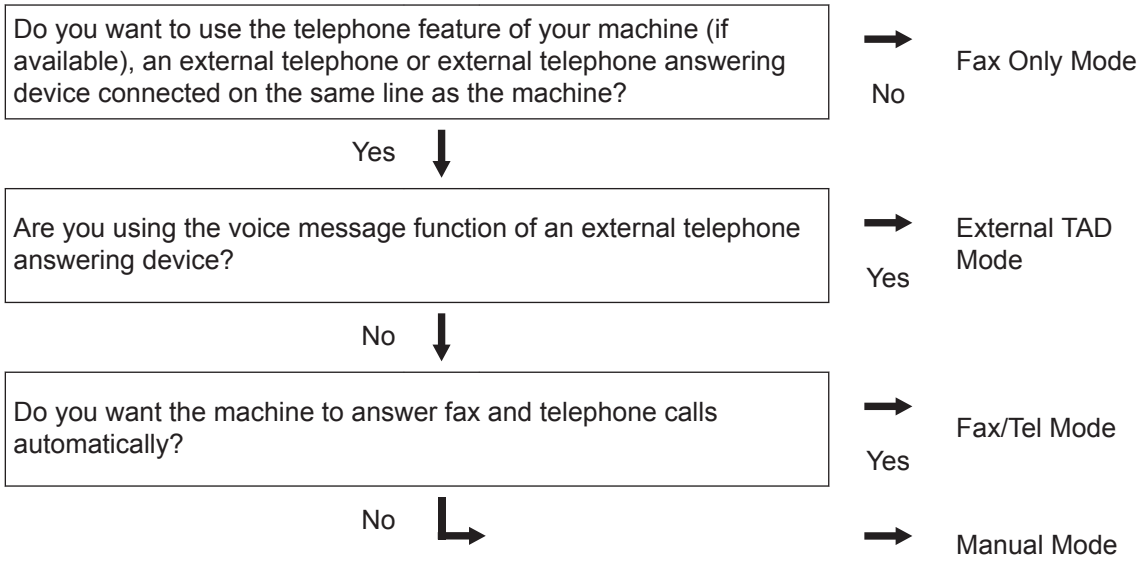

1. Press (Settings) > All Settings > Fax > Setup Receive > Receive Mode.
2. Press ▲ or ▼ to display the Fax, Fax/Tel, External TAD, or Manual option, and then press the option you want.
3. Press .

Related Information

- Fax and Telephone Problems on page 44

Set the F/T Ring Time (Fast Double-ring)

When you set the Receive Mode to Fax/Tel Mode, if the call is a fax, your machine will automatically receive it. However, if it is a voice call, the machine will sound the F/T ring (fast double-ring) for the time you set in the F/T Ring Time option. When you hear the F/T ring, it means that a voice caller is on the line.

- The F/T Ring Time feature works when you set Fax/Tel Mode as the Receive Mode.

Because the F/T ring is made by the machine, extension and external telephones will not ring; however, you can still answer the call on any telephone.

1. Press (Settings) > All Settings > Fax > Setup Receive > F/T Ring Time.
2. Press how long you want the machine to ring to alert you that you have a voice call.
3. Press .

Even if the caller hangs up during the pseudo/double-ringing, the machine will continue to ring for the set time.

Set the Number of Rings Before the Machine Answers (Ring Delay)

When somebody calls your machine, you will hear the normal telephone ring sound. The number of rings is set in the Ring Delay option.

- The Ring Delay setting sets the number of times the machine rings before it answers in the Fax Only Mode and the Fax/Tel Mode.
- If you have external or extension telephones on the same line as the machine, choose the maximum number of rings.

1. Press (Settings) > All Settings > Fax > Setup Receive > Ring Delay.
2. Press the number of rings you want the line to ring before the machine answers.

If you select 0, the machine will answer immediately and the line will not ring at all (available only for some countries).

3. Press .

Store Numbers

Store fax and telephone numbers in the machine for quick dialling and broadcasting faxes to groups. When you dial a stored number, the LCD displays the number.

If you lose electrical power, the Address Book numbers that are in the machine's memory will not be lost.

Store Address Book Numbers

Use the Address Book to store up to 200 Addresses with a name.

1 Press (Fax) > Address Book.

2 Do the following steps:

a. Press Edit.

b. Press Add New Address.

c. Press Name.

d. Enter the name using the LCD (up to 15 characters), and then press OK.

e. Press Address.

f. Enter the number using the LCD (up to 20 digits), and then press OK.

- Be sure to include the area code when entering a fax or telephone number. Depending on the country, the Caller ID names and history may not be displayed correctly if the area code is not registered with the fax or telephone number.
- If you downloaded Internet Fax:

  To store an E-mail address to use with Internet Fax or Scan to E-mail server, press and enter the E-mail address and press OK.

g. Press OK.

To store another Address Book number, repeat these steps.

3 Press .

Change or Delete Address Book Names or Numbers

1 Press (Fax) > Address Book > Edit.

2 Do one of the following:

- Press Change to edit the names or fax or telephone numbers.

  Press ▲ or ▼ to display the number you want to change, and then press it.

  - To change the name, press Name. Enter the new name (up to 15 characters) using the LCD, and then press OK.
  - To change the fax or telephone number, press Address. Enter the new fax or telephone number (up to 20 digits) using the LCD, and then press OK.

  Press OK to finish.

How to enter text:

To change a character, press ◀ or ▶ to position the cursor to highlight the character you want to change, and then press . Enter the new character.

- To delete numbers, press ▲ or ▼ to display Delete, and then press Delete.
  - Select the fax or telephone numbers you want to delete by pressing them to display a red check mark, and then press OK.

  Press Yes to confirm.

3 Press .

Telephone Services and External Devices

You may be able to use the following services and connections with your Brother machine.

These are summaries of ways to connect your machine. For details about each topic, see the *Online User's Guide*.

Voice Mail

If you have a voicemail service on the telephone line that your Brother machine is connected to, they may conflict with one another when receiving incoming faxes. If using this service, we suggest setting the Brother machine's Receive Mode to Manual.

Voice Over Internet Protocol (VoIP)

VoIP is a type of phone system that uses an Internet connection instead of a traditional telephone line. Your machine may not work with some VoIP systems. If you have questions about how to connect your machine to a VoIP system, contact your VoIP provider.

Connection of an External Telephone Answering Device (TAD)

You may choose to connect an external answering device to your Brother machine. To receive faxes successfully, you must connect it correctly. Connect your external TAD to the jack labeled EXT. on the Brother machine. When recording an outgoing message on your external TAD, we recommend recording 5 seconds of silence at the beginning of your message, and limiting your speaking to 20 seconds. Set your machine's Receive Mode to External TAD.

External and Extension Telephones

You can connect a separate phone into the jack labeled EXT. on the Brother machine. If you answer a fax call on an extension or external telephone, you can make your machine receive the fax by pressing * 5 1. If the machine answers a voice call and fast double rings for you to take over, press # 5 1 to take the call on an extension telephone.

Send and Receive a Fax Using Your Machine

Send a Fax

1 Load the correct size paper in the paper tray.

2 Do one of the following:

- Place the document *face up* in the ADF.

  (If you are faxing multiple pages, we recommend using the ADF.)

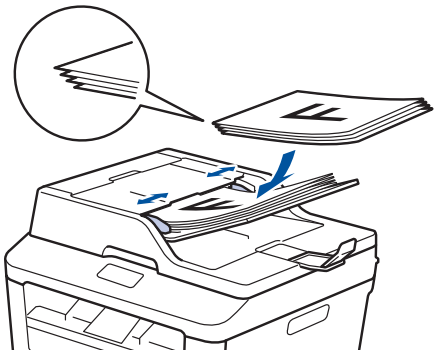

- Place the document *face down* on the scanner glass.

3 Press (`Fax`).

4 Enter the fax number.

- **Using the dial pad**

  Press the digits to enter the fax number.

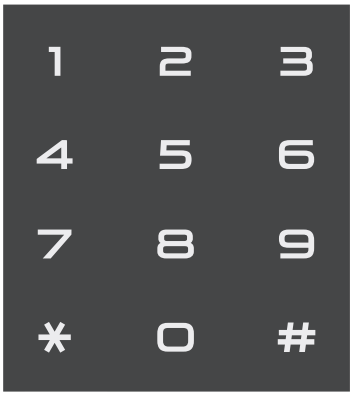

- **Using the Address Book**

  Press (`Address Book`), and then do one of the following:

  - Press ▲ or ▼ to display the number you want, and then press it.
  - Press , and then enter the first letter of the name and press `OK`. Press the name you want to dial. If the name has two fax or telephone numbers, press the fax number you want.

  When finished, press `Apply`.

- **Using the call history**

  Press (`Call History`), and then press the `Outgoing Call` option.

  Press ▲ or ▼ to display the fax number you want, and then press it.

  To send a fax, press `Apply`.

5 Press Fax Start.

The machine scans and sends the document.

If you placed the document on the scanner glass, follow the instructions in the table.

Option	Description
Yes	To scan the next page, press the Yes option, and then place the next page on the scanner glass. Press OK to scan the page.
No	After you have scanned the last page, press the No option. The machine sends the document.

To stop faxing, press .

Fax Using Your Computer (PC-FAX)

Send Faxes from Your Computer

The Brother PC-FAX feature lets you send a file, created in any application on your computer, as a standard fax and even attach a cover page.

For more information, see the *Online User's Guide*: *PC-FAX Overview (Macintosh)*

1 From your application select **File**, and then **Print**.

(The steps may vary depending on your application.)

The Print dialog box appears.

2 Select the **Brother PC-FAX**.

3 Click **OK**.

The **Brother PC-FAX** user interface appears.

4 Enter the recipient's fax number.

a. Use your computer keyboard or click the **Brother PC-FAX** user interface's numeric keypad.

b. Click .

You can also select a stored number from the **Address Book**.

5 Click **Start**.

Your document is sent to the Brother machine and then faxed to the recipient.

Contact the application's vendor if you need more support.

Receive Faxes on Your Computer (Windows® only)

Use Brother's PC-FAX software to receive faxes on your computer, screen them, and print only those faxes you want.

- Even if you turn off your computer (at night or on the weekend, for example), your machine will receive and store your faxes in its memory. The number of received faxes that are stored in the memory appears on the LCD.
- When you start your computer and the PC-Fax Receive software runs, your MFC transfers your faxes to your computer automatically.
- For PC-Fax Receive to work, the PC-FAX Receive software must be running on your computer.
- Before you can set up PC-Fax Receive, you must install the MFL-Pro Suite software on your computer. Make sure your Brother machine is connected to your computer and turned on.
- If your machine displays an error and is unable to print faxes from memory, use PC-FAX to transfer your faxes to a computer.
- *PC-Fax Receive is not available for Macintosh*.

1 Do one of the following:

- (Windows® XP, Windows Vista® and Windows® 7)

  Click **Start** > **All Programs** > **Brother** > **Brother Utilities** > **PC-FAX Receive** > **Receive**.

- (Windows® 8)

  Click (**Brother Utilities**), and then click the drop-down list and select your model name (if not already selected).

  Click **PC-FAX Receive** in the left navigation bar, and then click **Receive**.

2 Press `(Settings)` > `All Settings` > `Fax` > `Setup Receive` > `PC Fax Receive`.

Press `On`.

The LCD displays a reminder to start the PC-FAX Receive program on your computer.

3 Press `OK`.

For more information about how to start the PC-FAX Receive program, see the *Online User's Guide*: *PC-FAX for Windows®*

4 Press `<USB>` or your computer name. Press `OK`.

5 Press `Backup Print: On` or `Backup Print: Off`.

If you choose `Backup Print: On`, the machine will print the fax at your machine before transferring it to your computer so you will have a copy.

6 Press .

A Troubleshooting

Use this section to resolve problems you may encounter when using your Brother machine.

Identify the Problem

Even if there seems to be a problem with your machine, you can correct most problems yourself.

First, check the following:

- The machine's power cord is connected correctly and the machine's power is on.
- All of the machine's orange protective parts have been removed.
- Paper is inserted correctly in the paper tray.
- The interface cables are securely connected to the machine and the computer.
- Check the LCD or the machine's status in **Status Monitor** on your computer.

Find the Error	Find the Solution
Using the Status Monitor • Double-click the icon in the task tray. • (Windows®) If you check **Load Status Monitor on Startup**, the Status Monitor will launch automatically each time you start your PC.	• A green icon indicates the normal stand-by condition. • A yellow icon indicates a warning. • A red icon indicates an error has occurred. • A grey icon indicates the machine is offline. • Click the **Troubleshooting** button to access Brother's troubleshooting website.

Find the Error	Find the Solution
Using the LCD 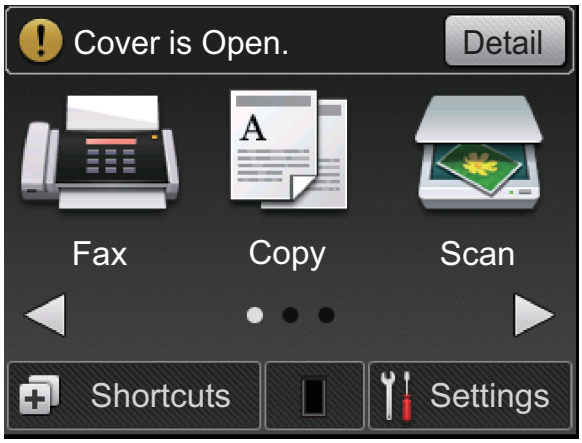	1. Follow the messages on the LCD. 2. See the *Online User's Guide*: *Error and Maintenance Messages* 3. Visit Frequently Asked Questions (FAQs) on the Brother Solutions Center at http://support.brother.com

Error and Maintenance Messages

The most common error and maintenance messages are shown in the table.

Error Message	Cause	Action
2-sided Disable	The back cover of the machine is not closed completely.	Close the back cover of the machine until it locks in the closed position.
Cartridge Error Put the Toner Cartridge back in.	The toner cartridge is not installed correctly.	Remove the toner cartridge and drum unit assembly. Take out the toner cartridge, and put it back in the drum unit again. Reinstall the toner cartridge and drum unit assembly in the machine.
Cover is Open	The front cover is not completely closed.	Open and then firmly close the front cover of the machine.
	The fuser cover is not completely closed or paper was jammed in the back of the machine when you turned on the power.	Close the fuser cover located inside the back cover of the machine.
	The ADF cover is not completely closed.	Close the ADF cover of the machine. If the error message remains, press, .
Document Jam	The document was not inserted or fed correctly, or the document scanned from the ADF was too long.	Remove the jammed paper from the ADF unit.

Error Message	Cause	Action
Drum End Soon	The drum unit is near the end of its life.	Order a new drum unit before you get the Replace Drum message.
Drum !	The corona wire on the drum unit must be cleaned.	Clean the corona wire on the drum unit. 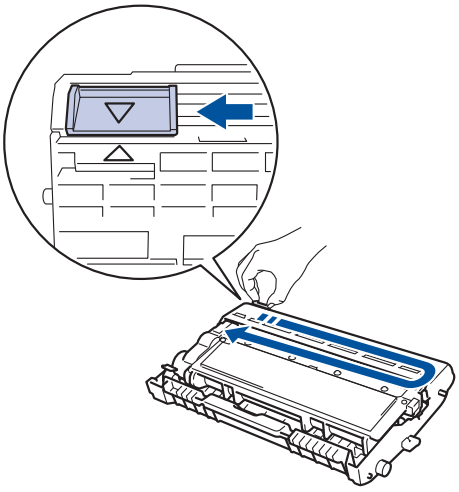
	The drum unit or the toner cartridge and drum unit assembly is not installed correctly.	Put the toner cartridge in the drum unit. Reinstall the toner cartridge and drum unit assembly in the machine.
Jam 2-sided	The paper is jammed underneath the paper tray or the fuser unit.	Pull the paper tray and the 2-sided tray out completely, open the back cover and then remove the jammed paper. Close the back cover, and put the paper tray and the 2-sided tray firmly back in the machine.
Jam Inside	The paper is jammed inside the machine.	Open the front cover and remove the toner cartridge and drum unit assembly. Pull out the jammed paper. Close the front cover.
Jam Rear	The paper is jammed in the back of the machine.	Open the fuser cover and remove the jammed paper. Close the fuser cover. If the error message remains, press Retry.
Jam Tray	The paper is jammed in the paper tray.	Pull the paper tray out completely and remove the jammed paper. Put the paper tray firmly back in the machine.
Manual Feed	**Manual** was selected as the paper source in the printer driver when there was no paper in the manual feed slot.	Place paper in the manual feed slot.

Error Message	Cause	Action
No Paper	The machine is out of paper, or paper is not loaded correctly in the paper tray.	Do one of the following: • Refill paper in the paper tray. Make sure the paper guides are set to the correct size. • Remove the paper and load it again. Make sure the paper guides are set to the correct size. • Make sure not to overfill the paper tray.
No Toner	The toner cartridge is not installed or is not installed correctly.	Remove the drum unit and toner cartridge assembly. Install the toner cartridge in the drum unit correctly. Reinstall the toner cartridge and drum unit assembly in the machine. If the problem continues, replace the toner cartridge.
Print Unable XX	The machine has a mechanical problem.	• Press and hold to turn off the machine, wait a few minutes, and then turn it on again. • If the problem continues, contact Brother customer service.
Replace Drum	It is time to replace the drum unit.	Replace the drum unit.
	The drum unit counter was not reset when a new drum was installed.	Reset the drum unit counter. See the instructions included with the new drum unit.
Replace Toner	The toner cartridge is at the end of its life. The machine stops all print operations. While memory is available, faxes are stored in the memory.	Replace the toner cartridge with a new one.
Scan Unable	The document is too long for 2-sided scanning.	Press . Use an appropriate size paper for 2-sided scanning.
Scan Unable XX	The machine has a mechanical problem.	• Press and hold to turn off the machine, and then turn it on again. • If the problem continues, contact Brother customer service.

Error Message	Cause	Action
Self-Diagnostic	The temperature of the fuser unit does not rise to a specified temperature within the specified time.	Press and hold to turn off the machine, wait a few seconds, and then turn it on again. Leave the machine idle for 15 minutes with the power on.
	The fuser unit is too hot.	
Size Error 2-sided	The paper size specified in the printer driver and the machine's menu are not available for automatic 2-sided printing.	Press . Choose a paper size supported by 2-sided printing. Paper size available for automatic 2-sided printing is A4.
	The paper in the tray is not the correct size and is not available for automatic 2-sided printing.	Load the correct size of paper in the tray and set the tray for that paper size. Paper size available for automatic 2-sided printing is A4.
Size mismatch	The paper in the tray is not the correct size.	Load the correct size of paper in the tray and set the size of paper to the tray.
Toner Ended	The toner cartridge is at the end of its life.	Replace the toner cartridge with a new one.
Toner Low	If the LCD displays this message you can still print. The toner cartridge is near the end of its life.	Order a new toner cartridge now so you have it ready when the LCD displays Replace Toner.

Fax and Telephone Problems

If you cannot send or receive a fax, check the following:

1 Connect one end of the telephone line cord to the area labelled "LINE", and then connect the other end of the telephone line cord directly to a telephone wall socket.

If you can send and receive faxes when the telephone line is directly connected to the fax, the problem may be unrelated to the machine. Please contact your telephone service provider for connection issues.

2 Check the receive mode.

See *Related Information*:

- Receive Modes
- Choose the Correct Receive Mode

3 Try changing the compatibility settings.

You may be able to send and receive faxes by lowering the connection speed.

For more information, see *Related Information*: Set Telephone Line Compatibility for Interference and VoIP Systems

If the problem still is not resolved, turn the machine off, and then turn it on.

Related Information

- Set Telephone Line Compatibility for Interference and VoIP Systems on page 29
- Receive Modes on page 29
- Choose the Correct Receive Mode on page 31

Troubleshooting for Other Fax Problems

Difficulties	Suggestions
Cannot receive a fax.	If you are using a telephone answering machine (`External TAD` mode) on the same line as the Brother machine, make sure your answering machine is set up correctly. 1. Set your answering machine to answer in one or two rings. 2. Record the outgoing message on your answering machine. • Record five seconds of silence at the beginning of your outgoing message. • Limit your speaking to 20 seconds. • End your outgoing message with your Act. Code for people sending manual faxes. For example: “After the beep, leave a message or press *51 and Start to send a fax.” 3. Set your answering machine to answer calls. 4. Set your Brother machine’s Receive Mode to `External TAD`.
	Make sure your Brother machine’s Fax Detect feature is turned On. Fax Detect is a feature that allows you to receive a fax even if you have answered the call on an external or extension telephone.
Received faxes appear as split pages.	Turn on Auto Reduction.
Dialling does not work. (No dial tone)	Check all line cord connections. Change `Tone/Pulse` setting. (Available only for some countries)
Poor sending quality.	Try changing your resolution to `Fine` or `S.Fine`.
	Make a copy to check your machine’s scanner operation. If the copy quality is not good, clean the scanner. For more information, see the *Online User's Guide*: *Telephone and Fax Problems*
Vertical black lines when sending.	Black vertical lines on faxes you send are typically caused by dirt or correction fluid on the glass strip. For more information, see the *Online User's Guide*: *Clean the Scanner*

Print or Scan Problems

If you cannot print or scan a document, check the following:

1 All of the machine's protective parts have been removed.

2 The interface cables are securely connected to the machine and the computer.

3 The printer or scanner driver has been installed correctly.

To make sure the printer or scanner driver is installed on your computer, see the *Online User's Guide*: Other Problems

4 (Scan problem only)

Confirm the machine is assigned with an available IP address. (Windows®)

a. Do one of the following:

(Windows® XP)

Click **Start** > **Control Panel** > **Printers and Other Hardware** > **Scanners and Cameras**.

(Windows Vista®)

Click **(Start)** > **Control Panel** > **Hardware and Sound** > **Scanners and Cameras**.

(Windows® 7)

Click **(Start)** > **All Programs** > **Brother** > **Brother Utilities**.

Click the drop-down list and select your model name (if not already selected). Click **SCAN** in the left navigation bar, and then click **Scanners and Cameras**.

(Windows® 8)

Click (**Brother Utilities**), and then click the drop-down list and select your model name (if not already selected). Click **SCAN** in the left navigation bar, and then click **Scanners and Cameras**.

b. Do one of the following:

(Windows® XP)

Right-click a scanner device, and then select **Properties**. The Network Scanner Properties dialog box appears.

(Windows Vista®, Windows® 7 and Windows® 8)

Click the **Properties** button.

c. Click the **Network Setting** tab to confirm the machine's IP address.

Try printing with your machine. If the problem still remains, uninstall and reinstall the printer driver.

5 If the problem still remains after trying all the above, try the following:

For a USB interface connection

- Change the USB cable for a new one.
- Use a different USB port.

For a Wired Network connection

- Change the LAN cable for a new one.
- Use a different LAN port on your hub.
- Make sure your machine's wired connection is on.

  For more information, see the *Online User's Guide*: *Select Your Network Connection Type*

For a Wireless Network connection

- Confirm your machine's Wi-Fi light status.

  If the Wi-Fi light on your machine's control panel is blinking, your machine has not been connected to the WLAN access point. Set up the wireless network connection again.

  If the Wi-Fi light on your machine's control panel is off, the WLAN

connection setting is disabled. Enable the WLAN connection and set up the wireless network connection.

For more information, see the *Online User's Guide*: *Introduction to Your Brother Machine*

If you cannot print on both sides of paper, check the following:

6 Change the paper size setting in the printer driver to A4.

Document and Paper Jams

Find the Jammed Document or Paper

If your document or paper jams inside the machine, the LCD message or Status Monitor will help you to find it.

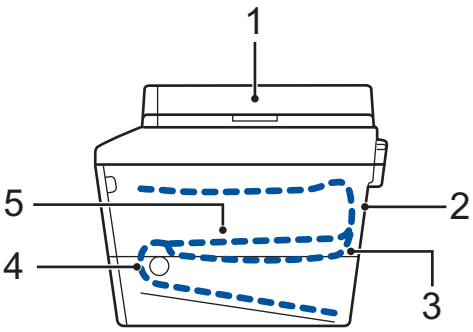

1. Document Jam
2. Jam Rear
3. Jam 2-sided
4. Jam Tray
5. Jam Inside

Clear the Document Jam

The Document is Jammed in the Top of the ADF

1 Open the ADF cover.

2 Pull the jammed document out to the left.

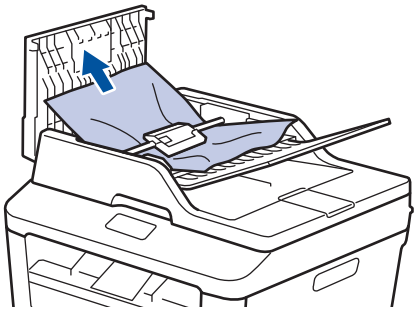

3 Close the ADF cover.

The Document is Jammed under the Document Cover

4 Pull the jammed document out to the right.

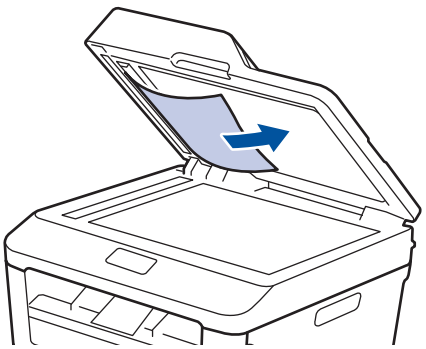

If the document rips or tears, remove all small paper scraps to prevent future jams.

Remove Small Paper Scraps Jammed in the ADF

5 Insert a strip of stiff paper, such as cardstock, into the ADF to push any small paper scraps through.

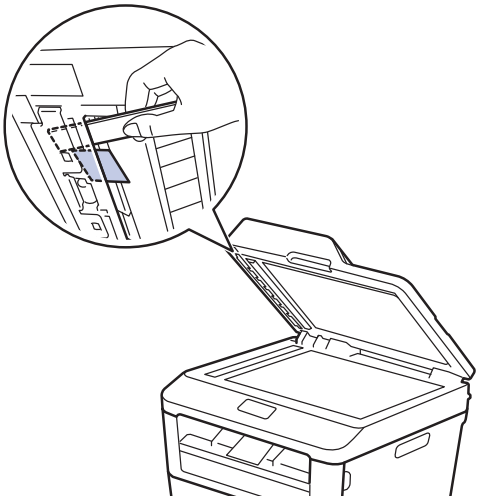

If the document rips or tears, remove all small paper scraps to prevent future jams.

6 Press .

Clear the Paper Jam

Always remove the remaining paper from the paper tray and straighten the stack when you are adding new paper. This helps prevent multiple sheets of paper from feeding through the machine at one time and prevents paper jams.

Paper is Jammed in the Paper Tray

If the LCD displays `Jam Tray`, do the following:

1 Pull the paper tray completely out of the machine.

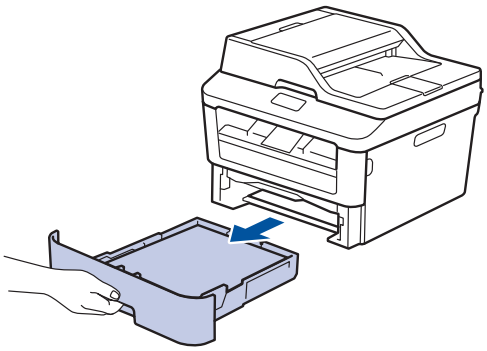

2 Slowly pull out the jammed paper.

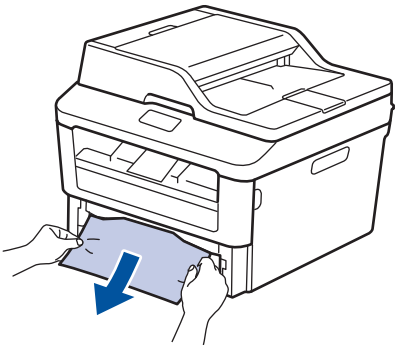

The easiest way to remove the paper is to use both hands to pull it downward.

3 Fan the stack of paper to prevent further jams, and slide the paper guides to fit the paper size.

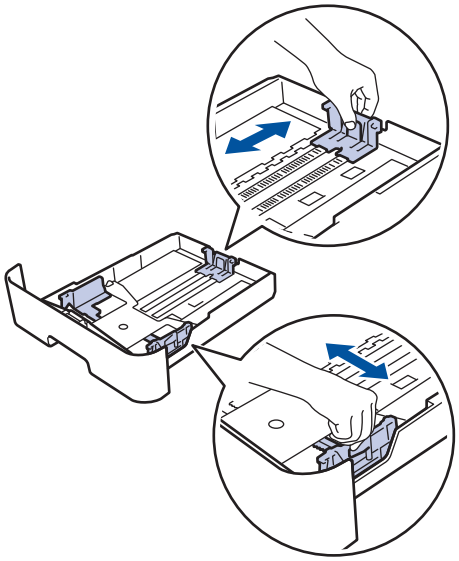

4 Make sure the paper is below the maximum paper mark (▼▼▼).

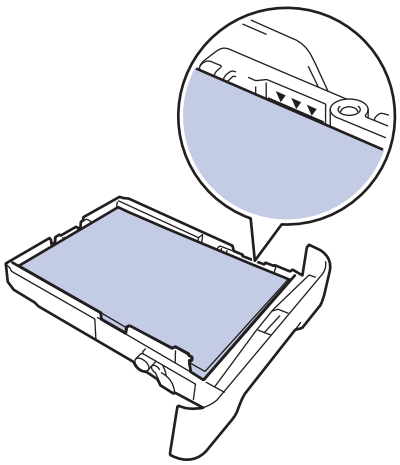

5 Put the paper tray firmly back in the machine.

Paper is Jammed in the Output Paper Tray

When the paper is jammed in the output paper tray, do the following:

1 Use both hands to open the scanner.

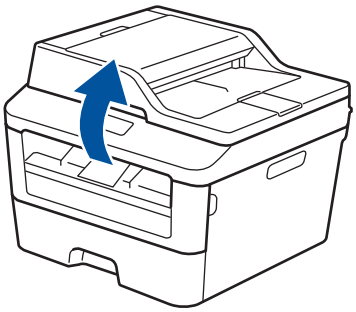

2 Remove the paper.

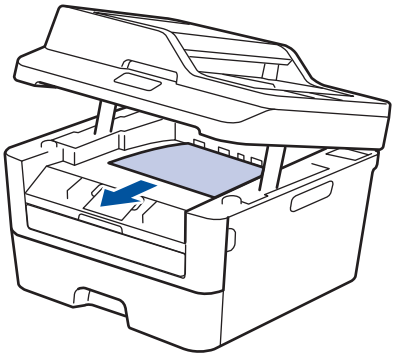

3 Push the scanner down with both hands to close it.

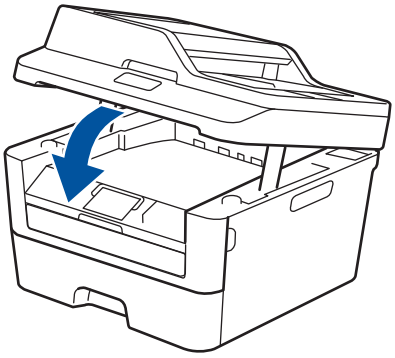

Paper is Jammed at the Back of the Machine

If the machine's control panel or the Status Monitor indicates that there is a jam in the back (Rear) of the machine, complete the following:

1 Leave the machine turned on for 10 minutes. This allows the internal fan to cool the extremely hot parts inside the machine.

2 Open the back cover.

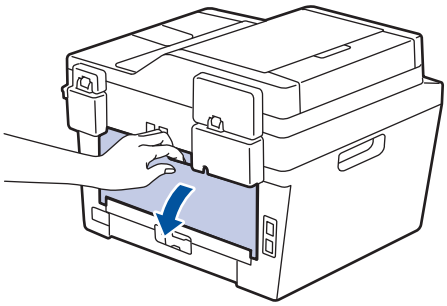

3 Pull the blue tabs at the left and right sides toward you to release the fuser cover.

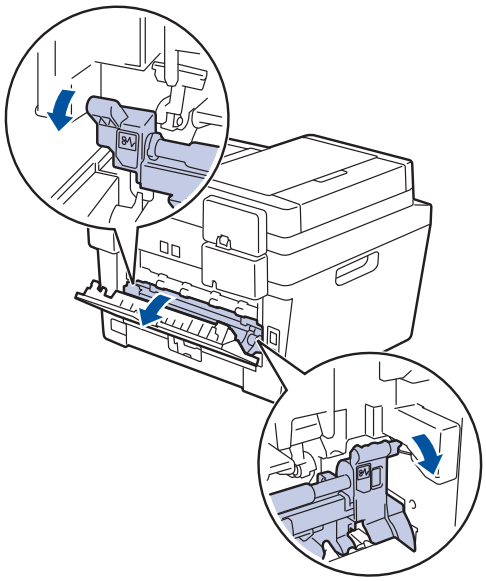

WARNING

HOT SURFACE

The machine's internal parts will be extremely hot. Wait for the machine to cool down before touching them.

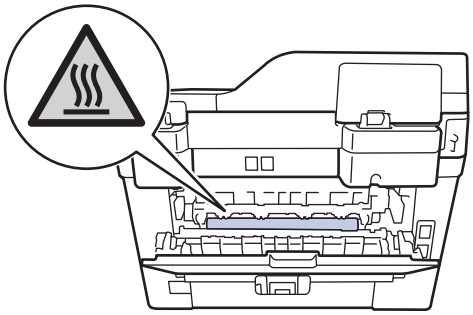

4 Use both hands to gently pull the jammed paper out of the fuser unit.

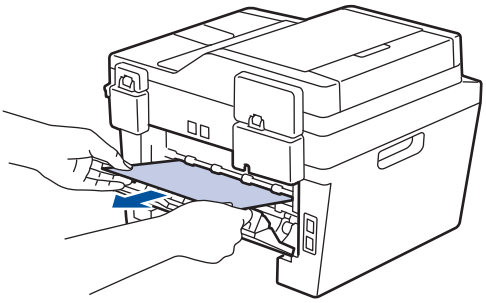

5 Close the fuser cover. Make sure the blue tabs at the left and right sides lock into place.

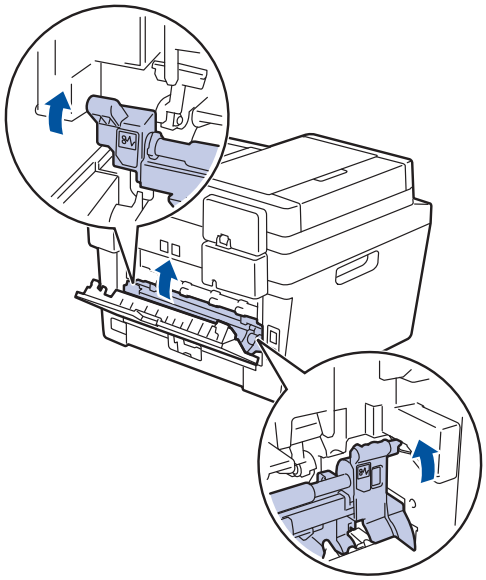

6 Close the back cover until it locks in the closed position.

Paper is Jammed inside the Machine

If the machine's control panel or the Status Monitor indicates that there is a jam inside the machine, complete the following:

1 Leave the machine turned on for 10 minutes. This allows the internal fan to cool the extremely hot parts inside the machine.

2 Open the front cover.

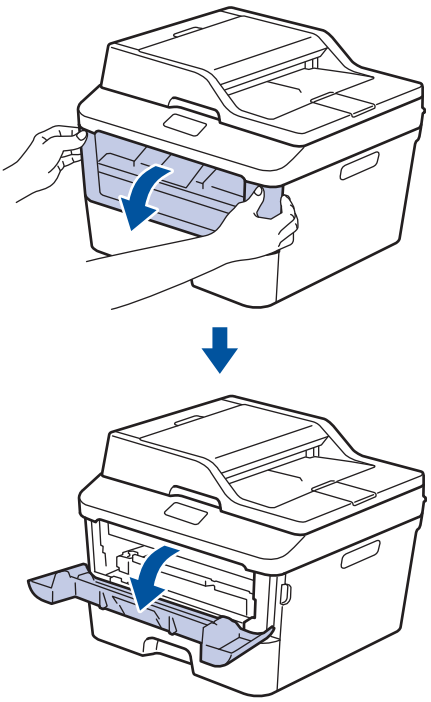

3 Remove the toner cartridge and drum unit assembly.

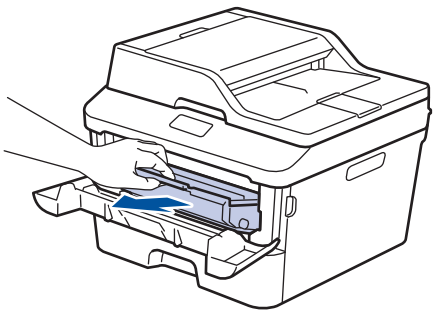

⚠ WARNING

HOT SURFACE

The machine's internal parts will be extremely hot. Wait for the machine to cool down before touching them.

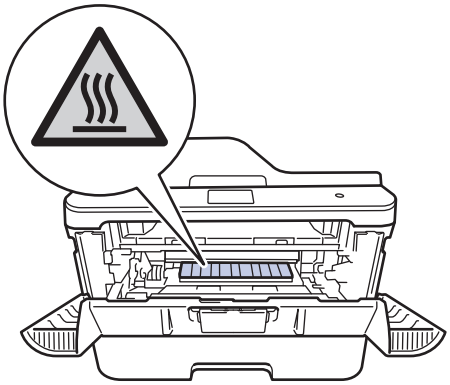

4 Pull out the jammed paper slowly.

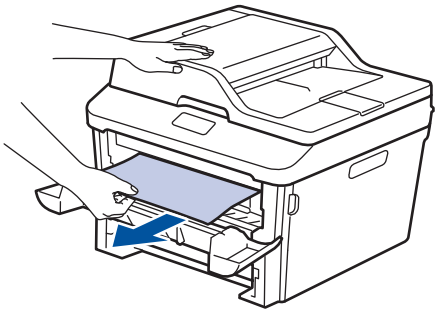

5 Install the toner cartridge and drum unit assembly into the machine.

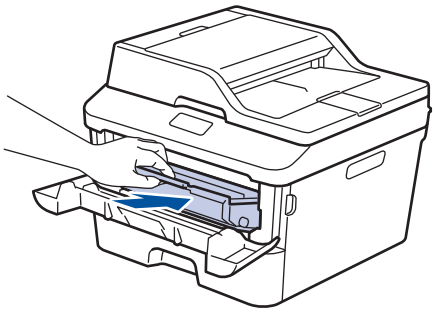

6 Close the front cover.

Paper is Jammed in the 2-sided Tray

If the machine's control panel or the Status Monitor indicates that there is a jam in the 2-sided paper tray, do the following:

1 Leave the machine turned on for 10 minutes. This allows the internal fan to cool the extremely hot parts inside the machine.

2 Pull the paper tray completely out of the machine.

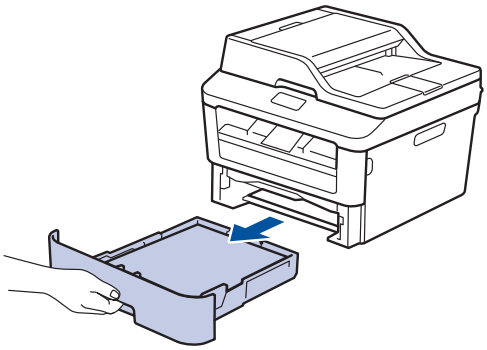

3 At the back of the machine, pull the 2-sided tray completely out of the machine.

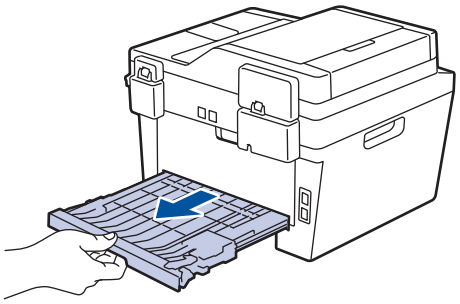

4 Pull the jammed paper out of the machine or out of the 2-sided tray.

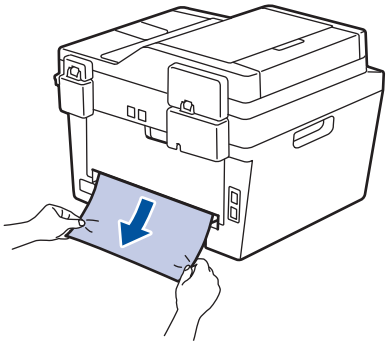

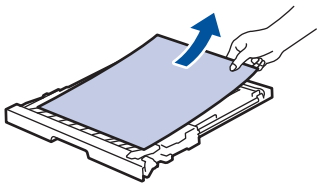

5 Remove paper that may have jammed under the machine due to static electricity.

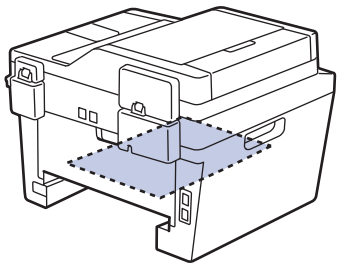

6 If paper is not caught inside the 2-sided tray, open the back cover.

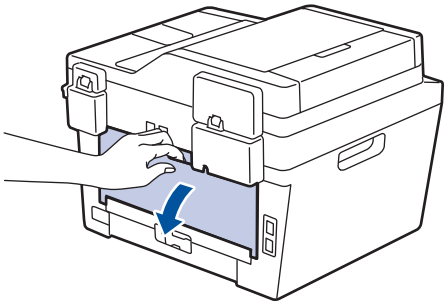

⚠ WARNING

HOT SURFACE

The machine's internal parts will be extremely hot. Wait for the machine to cool down before touching them.

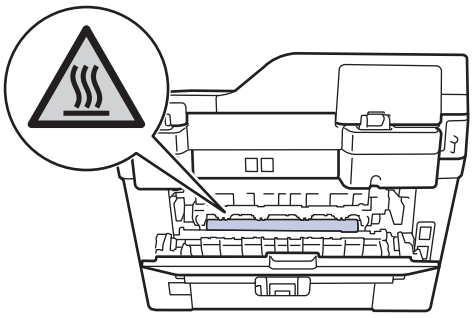

---

7 Use both hands to gently pull the jammed paper out of the back of the machine.

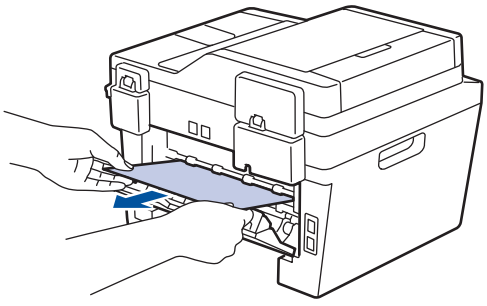

8 Close the back cover until it locks in the closed position.

9 Put the 2-sided tray firmly back in the rear of the machine.

10 Put the paper tray firmly back in the front of the machine.

B Appendix

How to Enter Text on Your Brother Machine

- When you must enter text on your Brother machine, a keyboard appears on the LCD.
- The characters that are available may differ depending on your country.
- The keyboard layout may differ depending on the function you are setting.

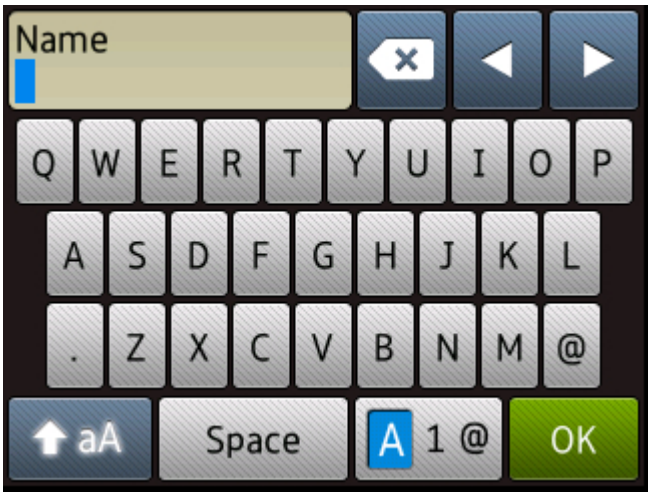

- Press A 1 @ to cycle between letters, numbers and special characters.
- Press aA to cycle between lowercase and uppercase letters.
- To move the cursor to the left or right, press ◀ or ▶.

Inserting spaces

- To enter a space, press `Space`.

Making corrections

- If you entered a character incorrectly and want to change it, press ◀ or ▶ to move the cursor to the incorrect character and press ⌫. Enter the correct character.
- To insert a character, press ◀ or ▶ to move the cursor to the correct place, and then enter the character.
- Press ⌫ for each character you want to erase, or press and hold ⌫ to erase all the characters.

Related Information

- Set Your Station ID on page 28

Supplies

When the time comes to replace supplies such as the toner or drum, an error message will appear on your machine's control panel or in the Status Monitor. For more information about the supplies for your machine, visit http://www.brother.com/original/index.html or contact your local Brother reseller.

The toner cartridge and drum unit are two separate parts.

Toner Cartridge	Drum Unit
Standard Toner: TN-2305 **High Yield Toner:** TN-2355	DR-2305
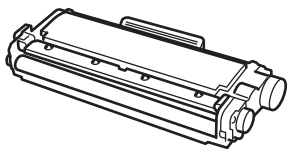	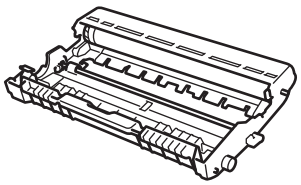

BROTHER CREATIVECENTER

If you are using Windows®, double-click the Brother CreativeCenter icon on your desktop to access our **FREE** website designed as a resource to help you easily create and print customized materials for business and home use with photos, text and creative touch. Mac users can access Brother CreativeCenter at this web address: http://www.brother.com/creativecenter

C Index

A

Address Book
  changing 33
  storing 33
ADF (Automatic Document Feeder).....
  .....17, 20, 21, 26, 35
Automatic
  fax receive.....29, 31

C

Control Panel Overview..... 1
Copy..... 17
  settings.....18

D

Date and time..... 7
Document
  how to load..... 17, 26, 35

E

Entering Text.....56
Envelopes..... 13
Error messages..... 40

F

Fax
  F/T ring time.....32
  receive mode.....29, 31
  ring delay.....32
  station ID.....28
  telephone line compatibility.....29
fax receive..... 31
Fax, from PC.....37

J

Jams..... 48
  document 48
  paper 49

L

LCD (Liquid Crystal Display)..... 1, 3, 4

M

Maintenance messages.....40
Manual
  receive 29, 31
Manual feed slot.....13, 15

P

Paper
  how to load 8
Print.....11

R

Receive Mode..... 29, 31

S

Scan.....25
Supplies..... 57

T

TAD (Telephone Answering Device),
  external..... 29, 34
Troubleshooting
  document and paper jams 48
  Error and Maintenance Messages . 40
  fax and telephone problems 44
  print or scan problems 46

V

Voice Mail..... 34
VoIP systems..... 29, 34
Volume.....7

These machines are approved for use in the country of purchase only. Local Brother companies or their dealers will support only machines purchased in their own countries.

www.brotherearth.com

LEM607041-01
SAF/GLF
Version A