Basic User’s Guide

MFC-J2320

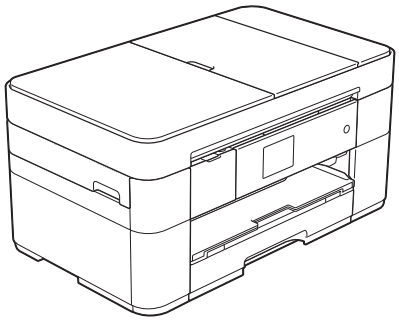

!CAUTION Before using this product, read carefully these instructions for correct operation. Keep the User's Guide in a secure place for future reference.

Version 0

CHN-ENG

To create a better environment

Please cooperate

Firstly, thank you very much indeed for using our Brother products!

Brother focuses on the earth environment concerned. And make a basic policy which is to concern about the earth environment, including any workflow from product development to discard. The local citizen should be responsible for local society and its environment during these environment protection activities.

Therefore, we hope you'll take part in this environment plan, and pay attention to environment protection points as below while discarding used consumables.

1 Please deliver the used package materials to relevant waste disposal office for recycle.

2 When you discard used consumables, please follow and carry on relevant local regulations properly.

3 When the machine need replacing parts for the maintenance and repair, please discard used circuit boards, used electrical parts and products as disposed electrical materials.

4 Some parts in the machine can be used on the same series model machines which produced by the same factory.

Note: If you want to replace the parts, please contact your local Brother repair station.

Register your product online at

http://www.brother.com/registration

Brother Numbers

IMPORTANT

For technical and operational assistance, call the call center in mainland China.

To seach Frequently asked questions (FAQs)/ASCs/Driver/Manuals, etc, please visit our service website:

http://www.95105369.com

To search where to purchase consumables, please visit the official website of BROTHER (CHINA) LTD.:

http://www.brother.cn

© 2014 Brother Industries, Ltd. All rights reserved.

You can use the following features!

High capacity versatile paper handling

You can load a maximum of 250 pages up to A3 or Ledger size in the large-capacity tray. (See *Loading paper* on page 8.)

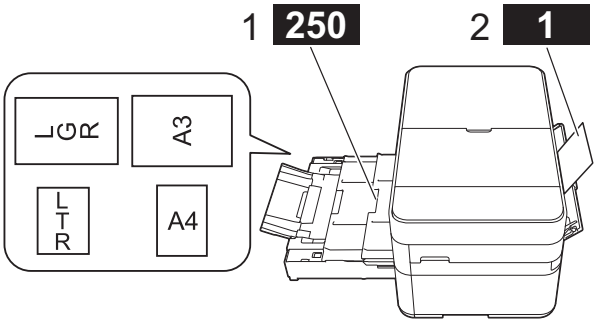

1 Paper Tray - - - 250 sheets / Up to A3 or Ledger

2 Manual Feed Slot - - - - 1 sheet

Mobile Connect

Use Brother iPrint&Scan to print and scan images and files from mobile devices.

(See Mobile Print/Scan Guide for Brother iPrint&Scan at solutions.brother.com/manuals.)

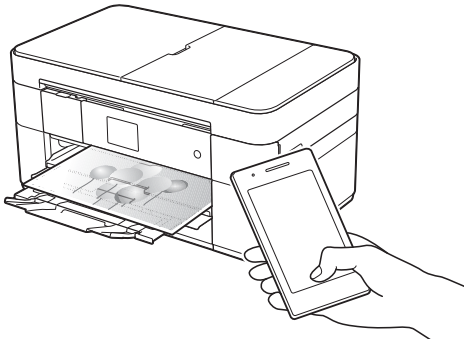

Web Connect / Brother Apps

Scan and upload images and files to popular web services directly from your machine. Capture and convert information directly from your machine without your computer.

(See Web Connect Guide at solutions.brother.com/manuals.)

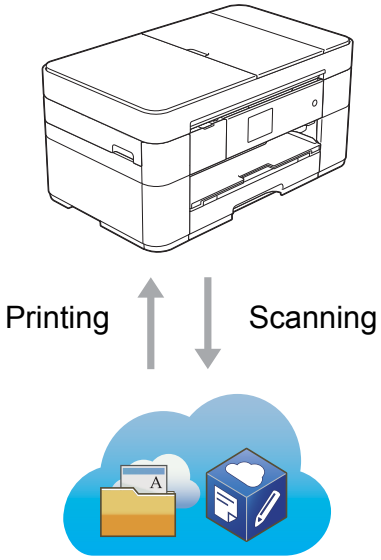

Add Shortcuts

Save your most frequently-used settings as Shortcuts.

(See Online User's Guide at solutions.brother.com/manuals.)

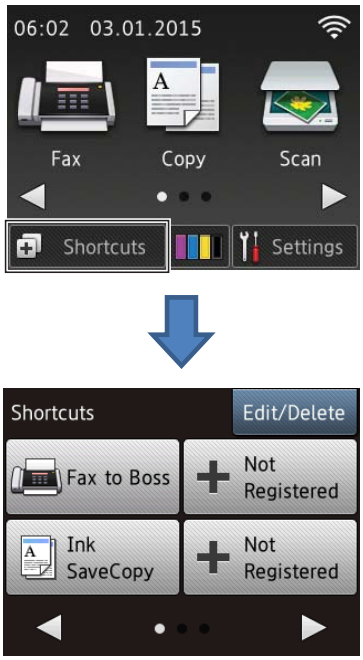

User's Guides and where to find them

Which Guide?	What's in it?	Where is it?
Product Safety Guide	Read this Guide first. Please read the Safety Instructions before you set up your machine. See this Guide for trademarks and legal limitations.	Printed / In the box
Quick Setup Guide	Follow the instructions for setting up your machine, and installing the drivers and software for the operating system and connection type you are using.	Printed / In the box
Basic User's Guide	Learn the basic Fax, Copy, Scan and PhotoCapture Center operations and basic machine maintenance. See troubleshooting tips.	Printed / In the box
Online User's Guide	This HTML (Web) guide includes the contents of the Basic User's Guide, and additional information about the machine's settings and operations, security features, troubleshooting tips, and maintenance instructions. In addition to information about the PC-Print, Scan, Copy, Fax (MFC models only), and PhotoCapture Center and Brother ControlCenter operations, useful information is included about using the machine on a network.	HTML / CD-ROM (Windows®) / Brother Solutions Center [1] (Macintosh)
Web Connect Guide	This Guide provides useful information about accessing Internet services from the Brother machine, as well as downloading images, printing data and uploading files directly to Internet services.	PDF file / Brother Solutions Center [1]
AirPrint Guide	This Guide provides information for using AirPrint to print from OS X v10.7.x or later and your iPhone, iPod touch, iPad, or other iOS device to your Brother machine without installing a printer driver.	PDF file / Brother Solutions Center [1]
Google Cloud Print Guide	This Guide provides details on how to use Google Cloud Print™ services for printing over the Internet.	PDF file / Brother Solutions Center [1]
Mobile Print/Scan Guide for Brother iPrint&Scan	This Guide provides useful information about printing from your mobile device and scanning from your Brother machine to your mobile device when connected to a Wi-Fi® network.	PDF file / Brother Solutions Center [1]

[1] Visit solutions.brother.com/manuals.

The Online User's Guide helps you get the most out of your machine.

- Quicker navigation!
  - Search box
  - Navigation index in a separate pane
- Comprehensive!
  - All topics in one guide
- Simplified layout!
  - Provides step-by-step instructions
  - Summarises the feature at the top of the page



1 Search Box

2 Navigation Index

3 Feature Summary

4 Step-by-Step Instructions

Where can I find the Online User's Guide?

(Windows®)

Click (**Start**) > **All Programs** > **Brother** > **Brother Utilities** > **MFC-XXXX** (Where XXXX is your model name.) > **Support** > **User's Guides**.

(Windows® 8)

Tap or click (**Brother Utilities**) > **MFC-XXXX** (Where XXXX is your model name.) > **Support** > **User's Guides**.

(Macintosh or other options)
Visit Brother Solutions Center: solutions.brother.com/manuals.

If you have questions or problems, please take a look at your model’s FAQs.

- Provides several ways to search
- Displays related questions for additional information
- Receives regular updates based on customer feedback

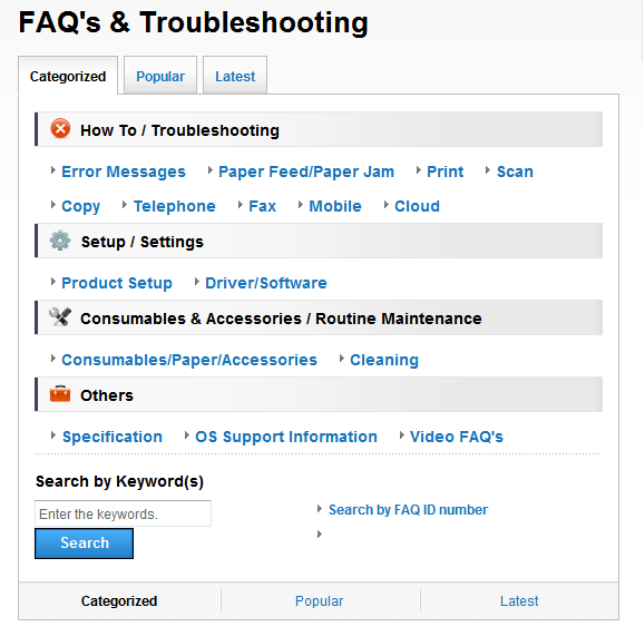

* The FAQ home page will vary depending on your model.

Where can I find these FAQs?

Brother Solutions Center

http://support.brother.com

Table of Contents

1 General information 1

How to use the documentation 1
Symbols and conventions 1
About Brother Utilities (Windows®) 1
Control panel overview 2
2.7"(67.5 mm) Touchscreen LCD 4
Entering Text 7

2 Loading paper 8

Before loading paper 8
Loading paper in the paper tray 8
Loading paper in the manual feed slot 13
Paper settings 15
Set Paper Size and Type 15
Check Paper setting 16
Recommended print media 16
Handling and using print media 16

3 Loading documents 17

How to load documents 17
Using the ADF 17
Using the scanner glass 18

4 Printing from a computer 19

How to print a document 19

5 Copying 20

How to copy 20
Stop copying 20
Copy options overview 20
Paper Type 21
Paper Size 21

6 Scanning to a computer ... 22

Before scanning 22
How to scan a document as a PDF file using ControlCenter4 (Windows®) 22
How to scan a document as a PDF file using the Touchscreen 23

7 Printing photos from a USB flash drive 24

PhotoCapture Center operations (PHOTO mode) 24
How to print images 24
View Photos 24
PhotoCapture Center print settings overview 25

8 Telephone services and external devices 26

Telephone services overview 26
Voicemail 26
Voice over Internet Protocol (VoIP) 26
Connecting an external telephone answering device (TAD) 26
External and extension telephones 26

9 Sending a fax 27

How to send a fax 27
Stop faxing 28
How to store numbers 28
Storing a pause 28
Storing Address Book numbers 29
How to set your Station ID 29

10 Receiving a fax 30

Receive Modes 30
Using Receive Modes 31
Receive Mode settings..... 32
Ring Delay 32

A Routine maintenance 33

How to clean and check the machine 33
Cleaning the scanner glass..... 33
Checking the print quality..... 33
Checking the print alignment 35

B Troubleshooting 36

Identifying the problem..... 36
Error and maintenance messages..... 37
Error animations..... 46
Transferring your faxes or Fax Journal report..... 46
Document jam 47
Printer jam or paper jam 49
Troubleshooting for Wireless LAN setup 54
Wireless LAN report..... 54
If you are having difficulty with your machine 55
Dial Tone detection..... 65
Telephone Line Interference or VoIP System 65
Machine Information 66
Checking the serial number 66
Checking the firmware version 66
Reset operations overview..... 66
How to reset the machine 67

C Index 68

Supplies 71

1 General information

How to use the documentation

Thank you for buying a Brother product! Reading the documentation will help you make the most of your machine.

Keep the User's Guide in a secure place for future reference.

Symbols and conventions

The following symbols and conventions are used throughout the documentation.

Bold	Bold typeface identifies buttons on your computer screen.
Italics	Italicized typeface emphasizes an important point or refers you to a related topic.
`Courier New`	Text in the Courier New font identifies messages displayed on the machine's Touchscreen LCD.

IMPORTANT

IMPORTANT indicates a potentially hazardous situation which, if not avoided, may result in damage to property or loss of product functionality.

NOTE

NOTE specifies the operating environment, conditions for installation, or special conditions of use.

About Brother Utilities (Windows®)

Brother Utilities is an application launcher that offers convenient access to all Brother applications installed on your device.

1. (Windows® XP, Windows Vista® and Windows® 7)
   Click (**Start**) > **All Programs** > **Brother** > (**Brother Utilities**).
   (Windows® 8)
   Tap or click (**Brother Utilities**) either on the Start screen or the desktop.
   (Windows® 8.1)
   Move your mouse to the lower left corner of the **Start** screen and click (if you are using a touch-based device, swipe up from the bottom of the **Start** screen to bring up the **Apps** screen). When the **Apps** screen appears, tap or click (**Brother Utilities**).
2. Select your machine.

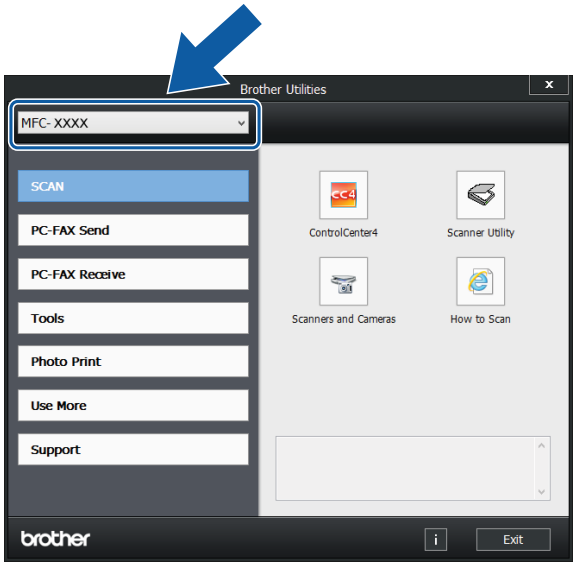

3. Choose the operation you want.

Control panel overview

2.7"(67.5 mm) Touchscreen LCD and Touchpanel

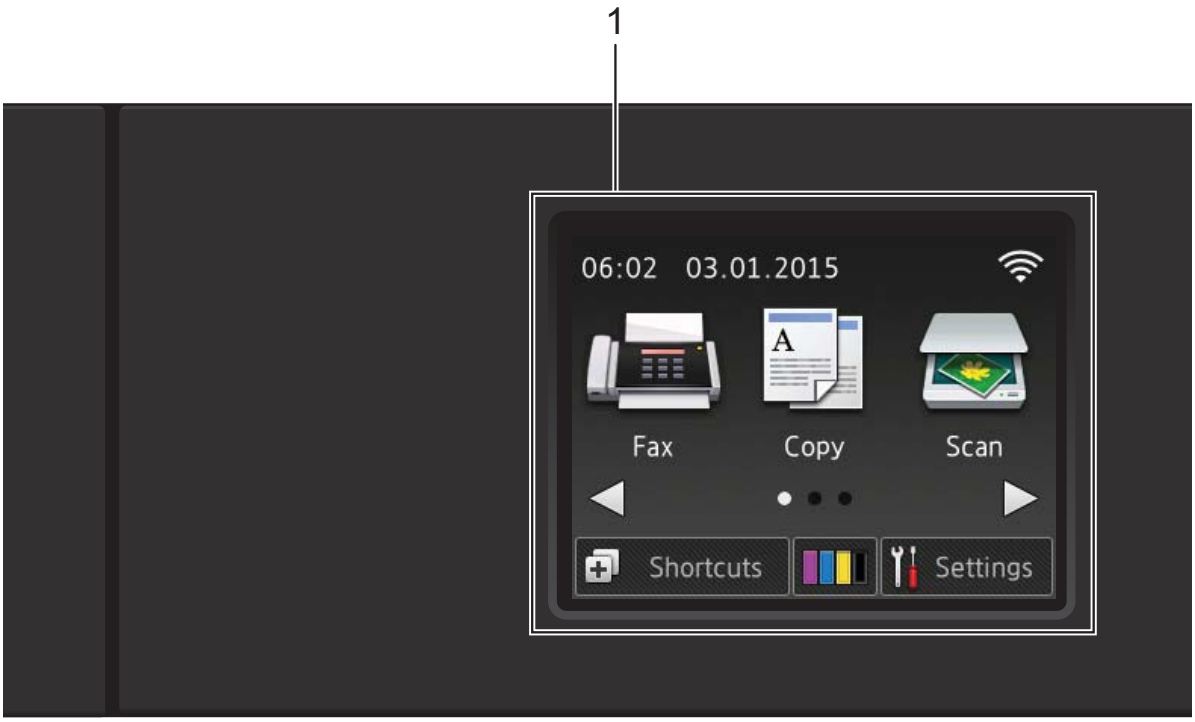

1 2.7"(67.5 mm) Touchscreen LCD (Liquid Crystal Display)

Access the menus and options you want by pressing them as they are displayed on the Touchscreen LCD.

You can adjust the angle of the Touchscreen LCD and Touchpanel by lifting it. To lower this control panel, press the release button located behind it, as shown in the illustration.

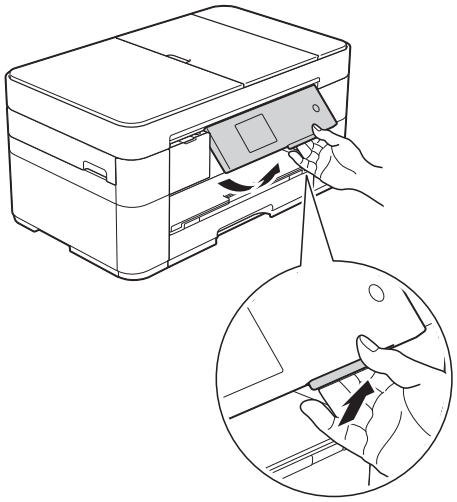

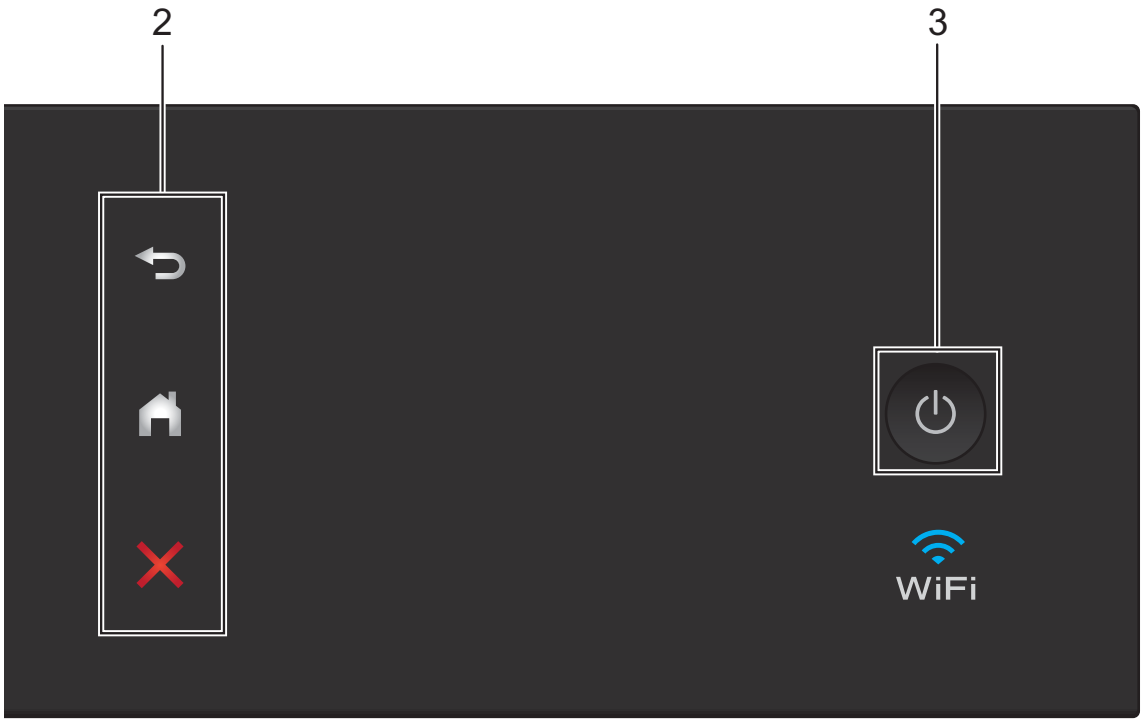

2 Touchpanel:

- **Back**
  Press to go back to the previous menu level.
- **Home**
  Press to return to the Home screen.
- **Cancel**
  Press to cancel an operation when lit.

3 Power On/Off

Press to turn the machine on.

Press and hold down to turn the machine off. The Touchscreen LCD displays `Shutting Down` and stays on for a few seconds before turning off.

If you have connected an external telephone or TAD, it is always available for use.

If you turn the machine off using , it still periodically cleans the print head to maintain print quality. To prolong the life of the print head, provide better ink efficiency, and maintain print quality, keep your machine connected to the power at all times.

2.7"(67.5 mm) Touchscreen LCD

There are three Home screens that you can access by pressing ◄ or ►.

From the Home screens, you can access Wi-Fi setup, Shortcuts, Ink levels and Setup screens.

Home Screen 1

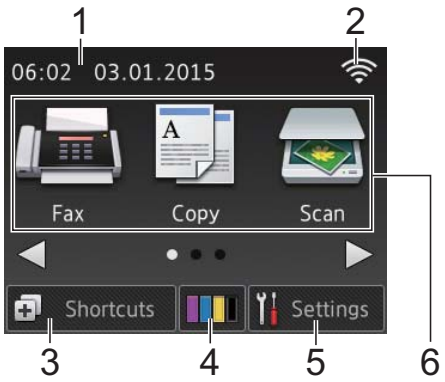

This screen displays the machine's status when the machine is idle.

This screen provides access to Fax, Copy and Scan operations.

This Home screen is also called the Ready Mode screen. When displayed, this indicates that your machine is Ready for the next command.

Home Screen 2

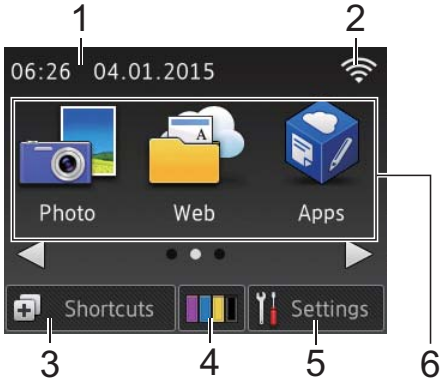

This screen provides access to additional features, such as Photo, Web and Apps operations.

Home Screen 3

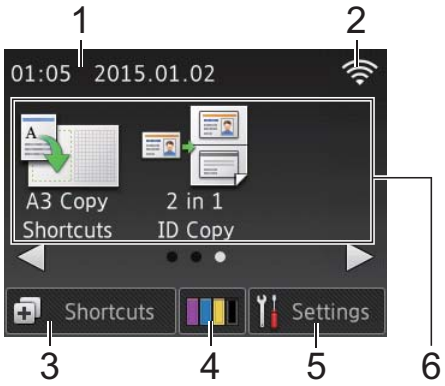

This screen provides access to A3 Copy Shortcuts and 2 in 1 ID Copy operations.

1 **Date & Time**

Displays the date and time set on the machine.

2 **Wireless Status**

A four-level indicator on the Ready Mode screen displays the current wireless signal strength when using a wireless connection.



■ When WiFi appears on the Touchscreen, press it to configure your wireless settings. For more information, see Quick Setup Guide.

3 **Shortcuts**

Create Shortcuts for frequently-used operations, such as sending a fax, copying, scanning and using Web Connect.

Three Shortcuts screens are available with space for up to four Shortcuts on each screen.

For more information, see Online User's Guide.

4 **Ink**

Displays the available ink volume.
Press to access the `Ink` menu.

When the ink cartridge is near the end of its life or having a problem, an error icon is displayed on the ink colour.

(See Online User's Guide.)

5 **Settings**

Press to access the settings.

(See *Settings screen* on page 6.)

6 **Modes:**

- **Fax**

  Press to access Fax mode.

- **Copy**

  Press to access Copy mode.

- **Scan**

  Press to access Scan mode.

- **Photo**

  Press to access Photo mode.

- **Web**

  Press to connect the Brother machine to an Internet service.

  For details, see Web Connect Guide.

- **Apps**

  Press to access the Brother Apps menu.

- **A3 Copy Shortcuts**

  Use this preset copy shortcut to copy on A3 or Ledger size.

  (See Online User's Guide.)

- **2 in 1 ID Copy**

  Press to copy both sides of your identification card onto one page, keeping the original card size.

7 **Stored Fax(es)**



When `Fax Preview` is set to `Off`, `Stored Fax(es)` displays how many received faxes are in the machine's memory.

Press `Print` to print the faxes.

8 **New Fax(es):**



When `Fax Preview` is set to `On`, `New Fax(es)` displays how many new faxes you have received and stored in the machine's memory.

Press `View` to view the faxes on the Touchscreen.

9 **Warning icon**



The warning icon appears when there is an error or maintenance message; press `Detail` to view it, and then press to return to Ready mode.

(See *Error and maintenance messages* on page 37.)

NOTE

This product adopts the font of ARPHIC TECHNOLOGY CO., LTD.

Settings screen

When you press (`Settings`), the Touchscreen LCD displays the machine's status.

This screen provides access to all the machine's settings.



1 **Maintenance**

Press to access the `Maintenance` menu.

Check and improve the print quality, clean the print head and check the available ink volume. You can also use the Maintenance solution menu to solve a recurring paper jam error.

2 **Fax Preview**

Displays the Fax Preview setting.

Press to access the `Fax Preview` menu.

3 **Receive Mode**

Press to access the `Receive Mode` menu.

4 **Receive Mode Display**

Displays the current Receive Mode:

- Fax Auto
- Fax/Tel
- External TAD
- Manual

5 **Date & Time**

Displays the date and time that has been set in the machine.

Press to access the Date & Time menu.

6 **Wi-Fi**

Press to set up a wireless network connection.

A four-level indicator on the screen displays the current wireless signal strength if you are using a wireless connection.

7 **Tray Setting**

Press to access the Tray Setting menu to change the paper size and paper type.

8 **All Settings**

Press to access the Settings menu.

Entering Text

When you must enter text into the machine, a keyboard appears on the Touchscreen.

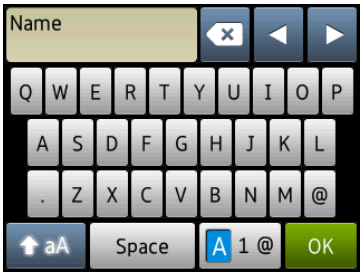

Press A 1 @ to cycle between letters, numbers and special characters.

NOTE

- To change between lowercase or uppercase, press aA.
- You can change the keyboard setting of the Touchscreen.

  (See Online User's Guide.)

Inserting spaces

To enter a space, press Space or you can press ▶ to move the cursor.

NOTE

The characters that are available may differ depending on your country.

Making corrections

If you entered an incorrect character and want to change it, press ◀ to move the cursor to highlight the incorrect character, and then press ⌫. Enter the correct character. You can also use the cursor to go back and insert characters.

Press ⌫ for each character you want to erase, or press and hold ⌫ to erase all the characters.

2 Loading paper

Before loading paper

Load only one size of paper and one type of paper in the paper tray at a time.

- When loading a different paper size in the tray, you must also change the paper size setting in the machine. (See *Set Paper Size and Type* on page 15.)
- If the Check Paper setting is On, the machine will display a message asking if you want to change the paper type and paper size when you pull the paper tray out of the machine. Change the paper size and paper type settings if needed, according to the instructions on the Touchscreen. (See *Check Paper setting* on page 16.)

We explain how to load paper for each tray:

Paper tray . . . . . See page 8.

Manual feed slot . . . . . See page 13.

Loading paper in the paper tray

Paper size and loading orientation

The paper size determines the orientation when loading paper in the paper tray.

Paper tray	
A4 ◆ Letter ◆ Executive ◆ JIS B5	Landscape orientation 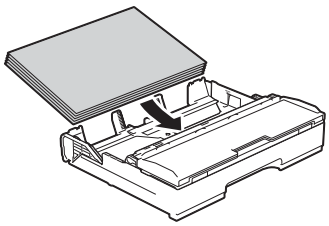
A5 A6 Photo Photo L Photo 2L Index card Envelope	Portrait orientation 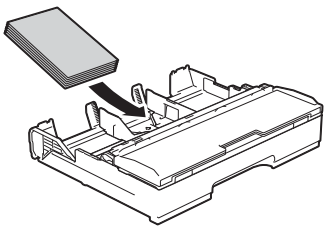
A3 ◆ Ledger ◆ JIS B4 Legal (Glossy photo paper is not supported)	Portrait orientation (Paper Tray is extended.) 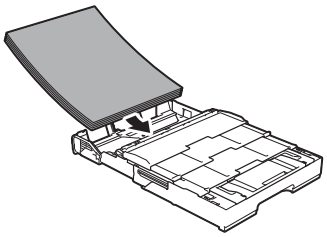

◆ See the details in this chapter.

For information about other paper sizes, see Online User's Guide.

When using A4, Letter or Executive size paper:

1. Pull the paper tray completely out of the machine.

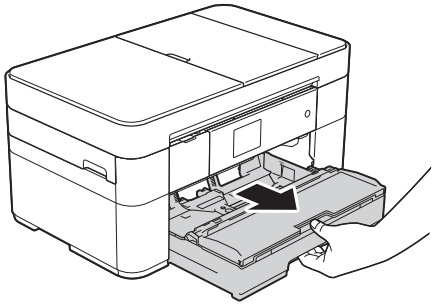

2. Gently press and slide the paper guides (1) to fit the paper size.
Make sure the triangular mark (2) on the paper guide (1) lines up with the mark for the paper size you are using.

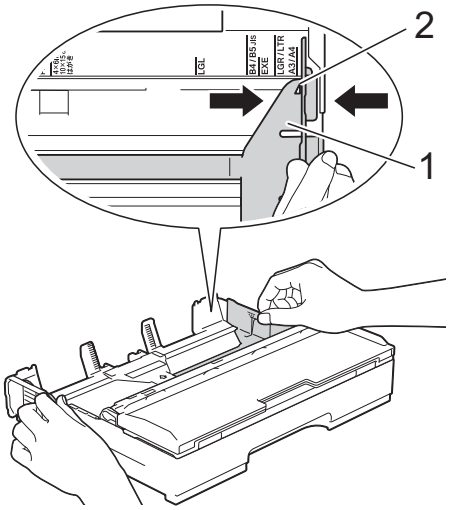

3. Fan the stack of paper well to avoid paper jams and misfeeds.

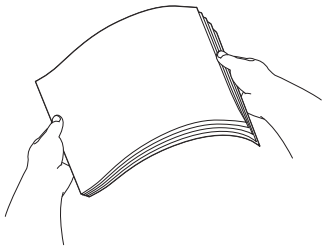

NOTE

Always make sure the paper is not curled.

4. Load paper in the paper tray with the printing surface **face down**.
Check that the paper is flat in the tray.

Landscape orientation

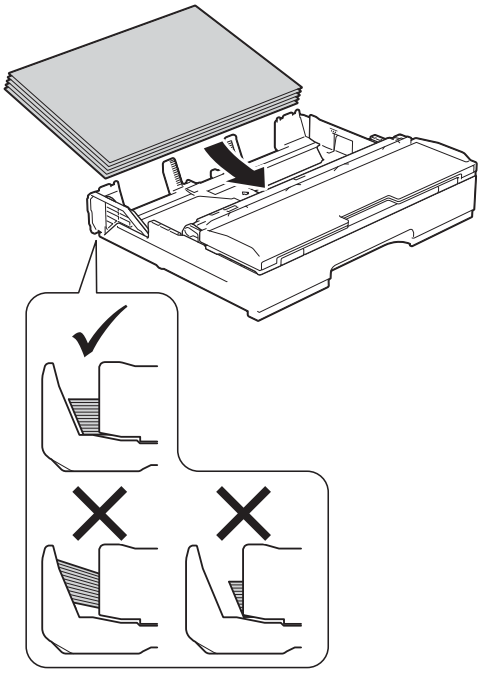

5 Gently adjust the paper guides (1) to the paper.
Make sure the paper guides touch the sides of the paper.

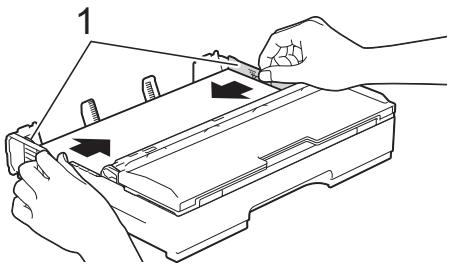

6 Check that the paper is flat in the tray and below the maximum paper mark (1).
Overfilling the paper tray may cause paper jams.

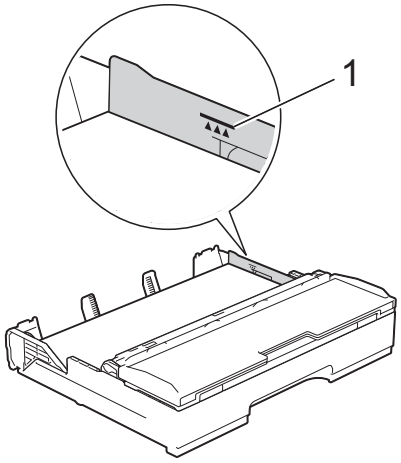

7 *Slowly* push the paper tray completely into the machine.

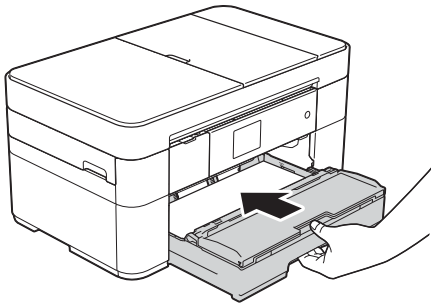

8 Pull out the paper support (1) until it locks into place, and then unfold the paper support flap (2).

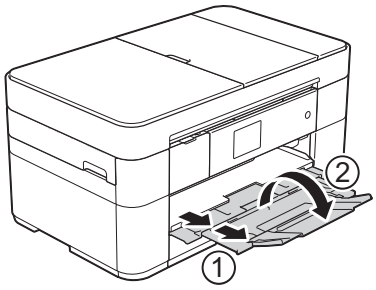

9 Change the paper size setting in the machine's menu, if needed.
(See *Set Paper Size and Type* on page 15.)

When using A3 or Ledger size paper:

1. Pull the paper tray completely out of the machine.
   Rest the tray on a flat surface.

2. Push the blue slider until it locks in the release position, and then extend the tray until the blue slider returns to and locks in the default position. Open the tray cover and make sure the triangular mark inside the tray (1) lines up with the mark (2) for **B4 JIS/LGL**, as shown in the illustration.

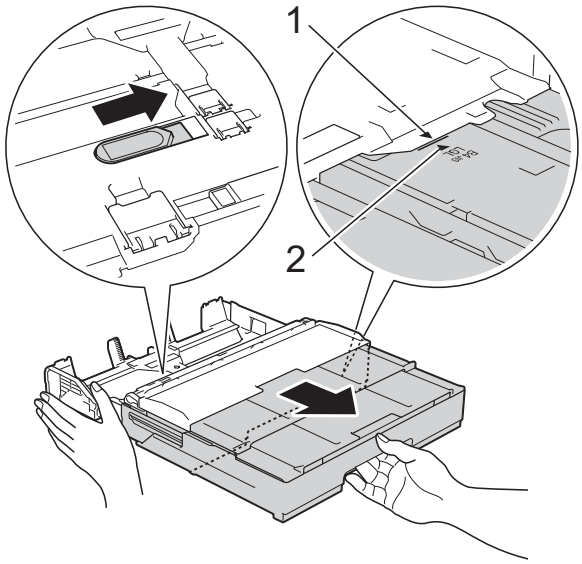

Push the blue slider a second time until it locks in the release position, and then extend the tray until the blue slider returns to and locks in the default position. Open the tray cover and make sure the triangular mark inside the tray (1) lines up with the mark (2) for **A3/LGR**, as shown in the illustration.

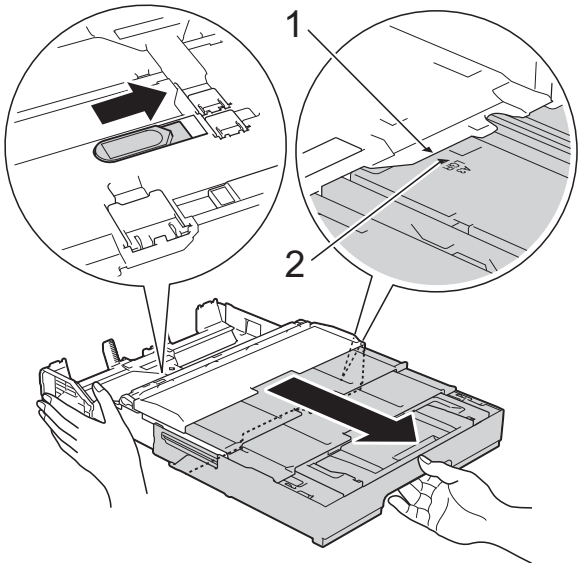

3. Gently press and slide the paper guides (1) to fit the paper size. Make sure the triangular mark (2) on the paper guide (1) lines up with the mark for the paper size you are using.

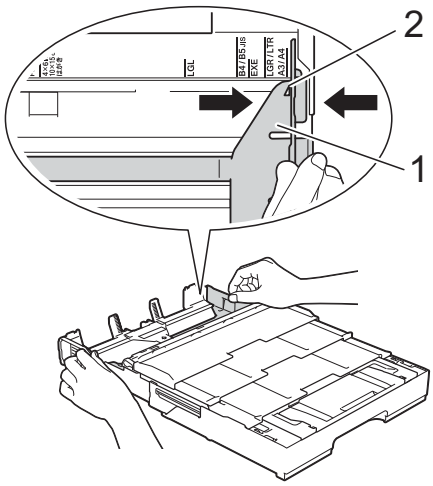

4 Fan the stack of paper well to avoid paper jams and misfeeds.

NOTE

Always make sure the paper is not curled or wrinkled.

5 Gently load paper in the paper tray with the printing surface **face down**. Check that the paper is flat in the tray.

Portrait orientation

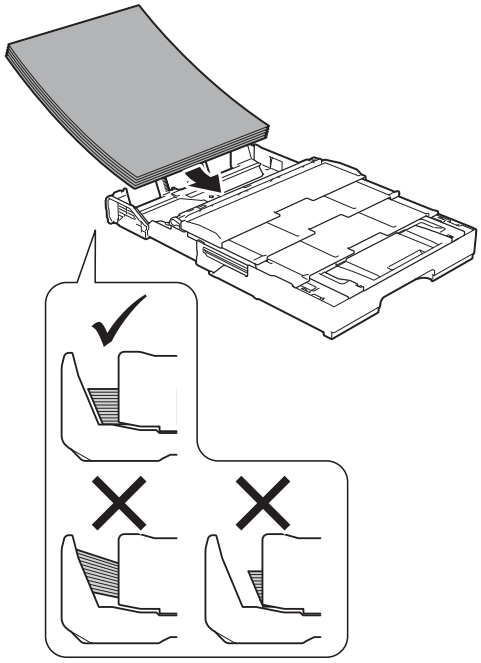

6 Gently adjust the paper guides (1) to fit the paper. Make sure the paper guides touch the sides of the paper.

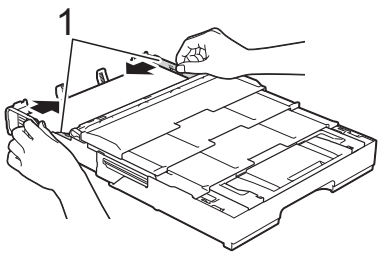

7 Check that the paper is flat in the tray and below the maximum paper mark (1). Overfilling the paper tray may cause paper jams.

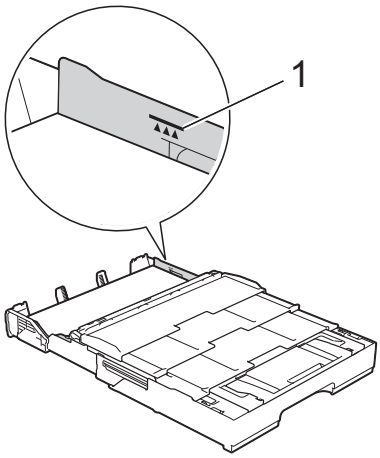

8 *Slowly* push the paper tray completely into the machine.

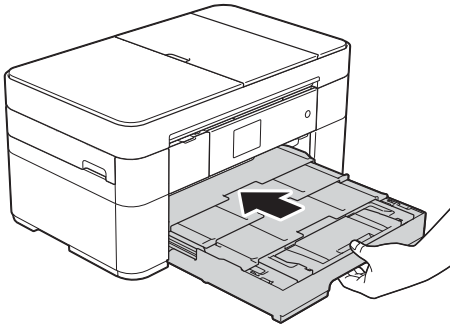

9 Unfold the paper support flap.

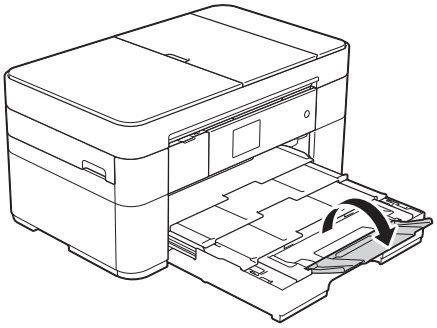

10 Change the paper size setting in the machine's menu, if needed.
(See *Set Paper Size and Type* on page 15.)

Loading paper in the manual feed slot

Use the manual feed slot to load special print media, one sheet at a time.
The manual feed slot does not support printing faxes.

Paper size and loading orientation

The paper size determines the orientation when loading paper in the manual feed slot.

Manual feed slot	
A4 Letter Executive JIS B5	Landscape orientation 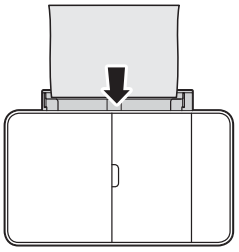
A3 ◆ Ledger ◆ JIS B4 Legal Folio A5 A6 Photo Photo L Photo 2L Index card Envelope	Portrait orientation 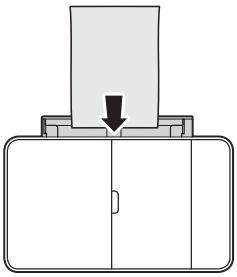

◆ See the details in this chapter.

For information about other paper sizes, see Online User's Guide.

When using A3 or Ledger size paper:

1. Open the manual feed slot cover.

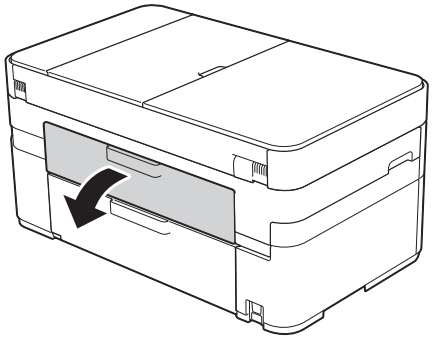

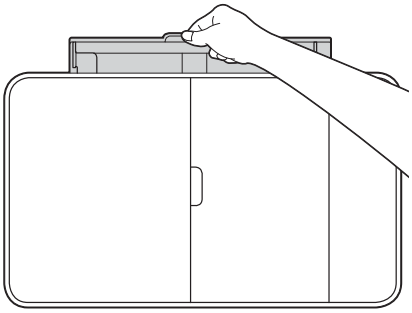

2. Slide the manual feed slot paper guides to fit the paper width of the paper you are using.

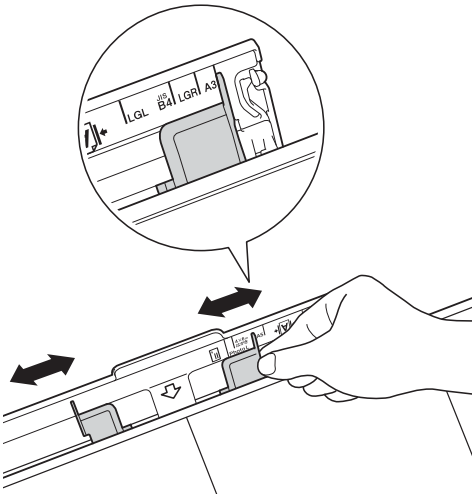

3 Load *only one* sheet of paper in the manual feed slot with the printing surface **face up**.

Portrait orientation

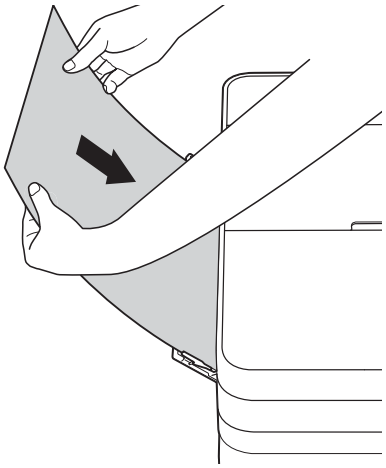

4 Using both hands, gently adjust the manual feed slot paper guides to fit the paper.

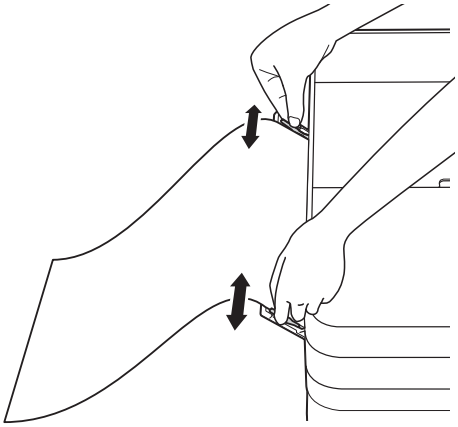

5 Using both hands, push one sheet of paper into the manual feed slot until the front edge touches the paper feed rollers. Let go of the paper when you hear the machine pull it. The Touchscreen displays `Manual Feed Slot ready`.

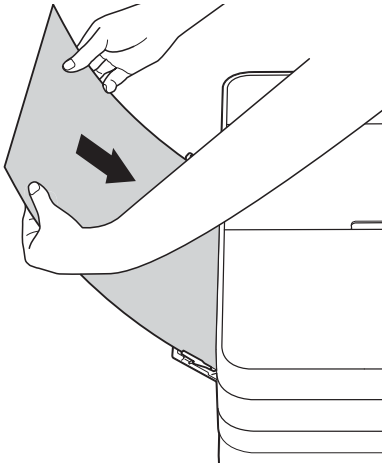

6 Pull out the paper support (1) until it locks into place, and then unfold the paper support flap (2).

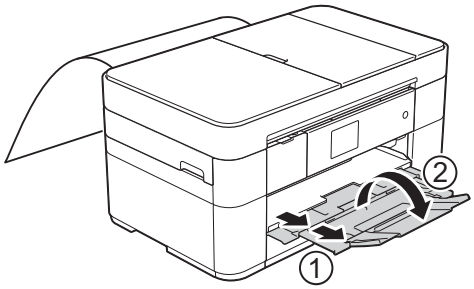

NOTE

If the document does not fit on one sheet, the Touchscreen will prompt you to load another sheet of paper. Place another sheet of paper in the manual feed slot, and then press `OK` on the Touchscreen.

Paper settings

Set Paper Size and Type

Paper Type

To get the best print quality, set the machine for the type of paper you are using.

1. Press  (Settings).
2. Press  (Tray Setting).
3. Press Paper Type.
4. Press ▲ or ▼ to display Plain Paper, Inkjet Paper, Brother BP71 or Other Glossy, and then press the option you want to set.

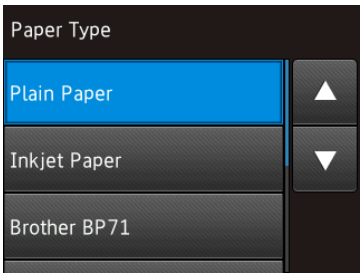

NOTE

When Brother BP71 or Other Glossy is selected, the paper tray does not support paper larger than Letter or A4 size.

5. Press .

NOTE

The machine ejects paper with the printed surfaces face up onto the paper tray at the front of the machine. When using glossy paper, remove each sheet at once to prevent smudging or paper jams.

Paper Size

You can use the following sizes of paper for printing copies: A4, A5, A3, Photo (10 × 15 cm), Letter, Legal, Ledger and Folio, and the following sizes for printing faxes: A4, A3, Ledger, Letter, Legal and Folio. When loading a different size of paper in the machine, you must change the paper size setting at the same time so your machine can fit an incoming fax on the page.

1. Press  (Settings).
2. Press  (Tray Setting).
3. Press Paper Size.
4. Press ▲ or ▼ to display the option you want to set, and press it.

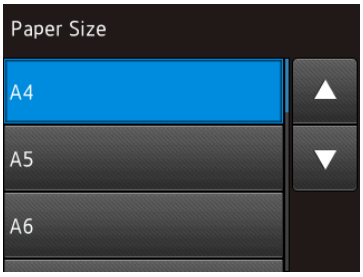

5. Press .

Check Paper setting

If the check paper setting is set to On, the machine displays a message asking if you want to change the paper type and paper size setting. This message will appear each time you pull a tray out of the machine. The default setting is On.

1. Press  (Settings).
2. Press All Settings.
3. Press ▲ or ▼ to display General Setup.
4. Press General Setup.
5. Press ▲ or ▼ to display Check Paper.
6. Press Check Paper.
7. Press Off (or On).
8. Press .

Recommended print media

To get the best print quality, we recommend using the Brother paper in the table.

If the listed Brother paper is not available in your country, we recommend testing various papers before purchasing large quantities.

Brother paper

Paper Type	Item
A3 Plain	BP60PA3
A3 Glossy Photo	BP71GA3
A3 Inkjet (Matte)	BP60MA3
A4 Plain	BP60PA
A4 Glossy Photo	BP71GA4
A4 Inkjet (Matte)	BP60MA
10 × 15 cm Glossy Photo	BP71GP

Handling and using print media

IMPORTANT

DO NOT use the following kinds of paper:

- Damaged, curled, wrinkled, or irregularly shaped paper

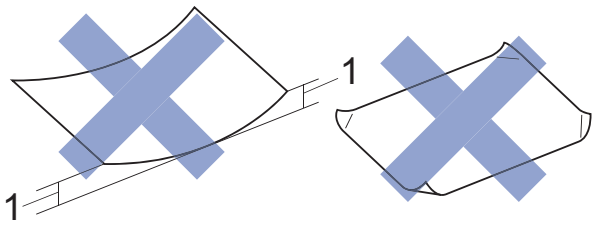

1 2 mm or greater curl may cause jams to occur.

- Extremely shiny or highly textured paper
- Paper that cannot be arranged uniformly when stacked
- Short grain paper

3 Loading documents

How to load documents

You can send a fax, make copies, or scan from the automatic document feeder (ADF) and from the scanner glass.

Using the ADF

The ADF can hold up to 35 pages and feed each sheet individually. Use paper that is within the sizes and weights shown in the table. Always fan the edges of the pages before placing them in the ADF.

Document Sizes and Weights

Length:	148 to 355.6 mm
Width:	148 to 215.9 mm
Paper weight:	64 to 90 g/m^2

How to load documents

IMPORTANT

- DO NOT pull on the document while it is feeding.
- DO NOT use paper that is curled, wrinkled, folded, ripped, stapled, paper clipped, glued or taped.
- DO NOT use cardboard, newspaper or fabric with the ADF. Instead use the scanner glass.
- DO NOT leave thick documents on the scanner glass. If you do this, the ADF may jam.

Make sure documents written with ink or modified with correction fluid are completely dry.

1. Unfold the ADF document support (1).

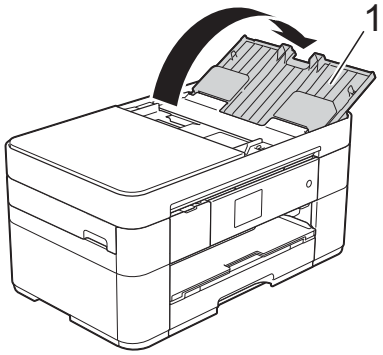

2. Fan the pages well.
3. Adjust the paper guides (1) to fit the width of your documents.

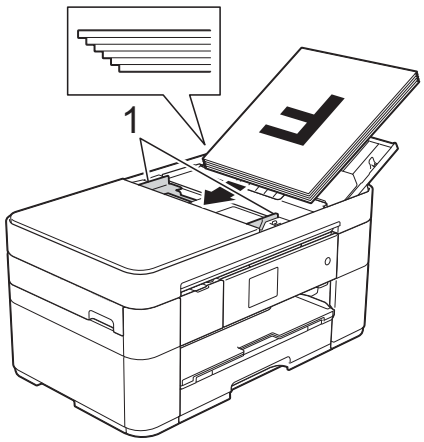

4. Place your documents **face up, top edge first** in the ADF until you feel them touch the feed rollers.
The Touchscreen displays `ADF Ready`.

NOTE

- DO NOT load your document underneath the supports (1).

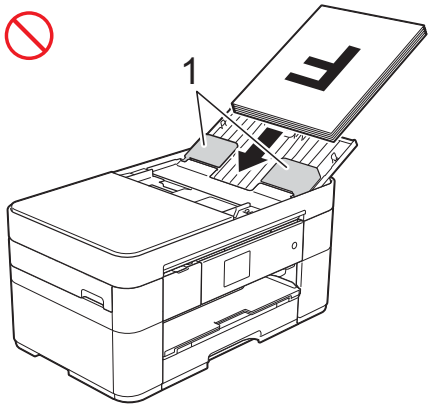

- If you load a small size document and cannot remove it, open the stack tray (1) and then remove the document.

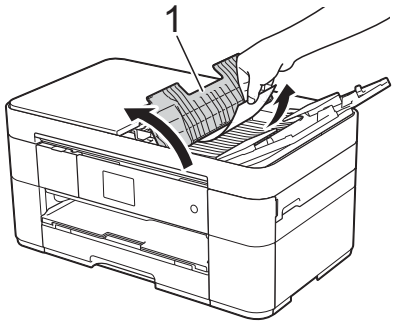

Close the stack tray before closing the ADF document support.

Using the scanner glass

Use the scanner glass to fax, copy, or scan single pages or pages of a book.

Document Sizes Supported

Length:	Up to 297 mm
Width:	Up to 215.9 mm
Weight:	Up to 2 kg

How to load documents

NOTE

To use the scanner glass, the ADF must be empty.

1. Lift the document cover.
2. Place the document **face down** in the upper left corner of the scanner glass.

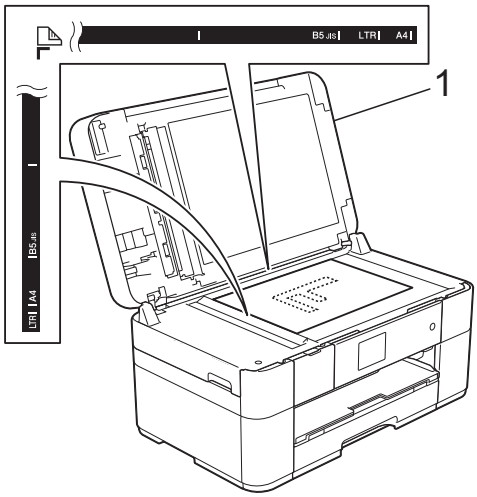

1 Document Cover

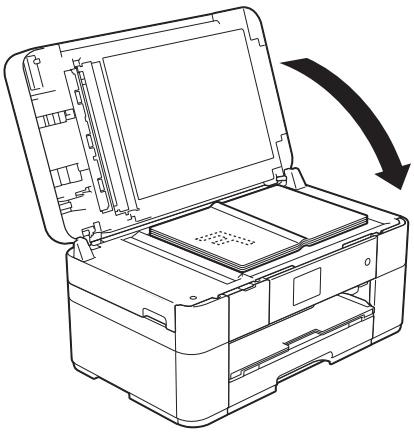

3. Close the document cover.

IMPORTANT

If you are scanning a book or thick document, DO NOT slam or press on the document cover.

4 Printing from a computer

How to print a document

The machine can receive and print data from your computer. Before you can print from a computer, you must install the printer driver.

(See Online User's Guide.)

1. Install the Brother printer driver from the CD-ROM or Brother Solutions Center. (See Quick Setup Guide.)
2. From your application, select the Print command.
3. Select the name of your machine in the **Print** dialog box and click **Properties** or **Preferences**, depending on the application you are using.
4. Select the settings you want to change in the Properties dialog box. Commonly used settings include:
   - **Media Type**
   - **Print Quality**
   - **Paper Size**
   - **Orientation**
   - **Colour / Greyscale**
   - **Ink Save Mode**
   - **Scaling**
   - **2-sided / Booklet**
5. Click **OK**.
6. Click **Print** (or **OK** depending on the application you are using) to begin printing.

5 Copying

How to copy

1. Do one of the following to load your document:
   - Place the document *face up* in the ADF.

     (See *Using the ADF* on page 17.)
   - Place the document *face down* on the scanner glass.

     (See *Using the scanner glass* on page 18.)

2. Press  (Copy).
   - The Touchscreen displays:

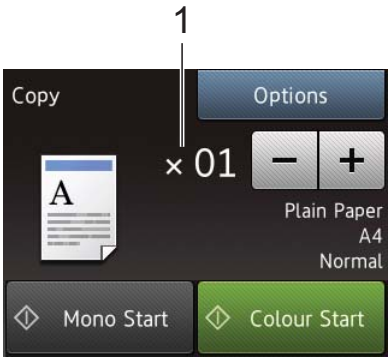

1 No. of Copies

Enter the number of copies:
- Press - or + on the Touchscreen.
- Press the displayed number of copies on the Touchscreen, and then enter the number of copies you want.

  Press OK.

3. If you want more than one copy, enter the number (up to 99).

4. Press Mono Start or Colour Start.

Stop copying

To stop copying, press .

Copy options overview

To change the copy options, press Copy, and then press Options. Press ▲ or ▼ to scroll through the copy settings. When the setting you want is displayed, press it and choose your option. When you have finished changing options, press OK.

For more information about changing the following copy options, see page 21.
- Paper Type
- Paper Size

For more information about changing the following copy options, see Online User's Guide.
- Quality
- Enlarge/Reduce
- Page Layout
- 2 in 1 (ID)
- Stack/Sort
- Density
- Ink Save Mode
- Thin Paper Copy
- Book Copy
- Watermark Copy
- Remove Background Colour
- 2-sided Copy
- Set New Default
- Factory Reset

Paper Type

When copying on a special type of paper, set the machine for the type of paper you are using to get the best print quality.

1. Load your document.
2. Press  (Copy).
3. Enter the number of copies you want.
4. Press Options.
5. Press ▲ or ▼ to display Paper Type.
6. Press Paper Type.
7. Press ▲ or ▼ to display Plain Paper, Inkjet Paper, Brother BP71 or Other Glossy, and then press the option you want to set.

NOTE

When Brother BP71 or Other Glossy is chosen, the paper tray does not support the paper larger than A4 or Letter size.

8. Press OK.
9. Press Mono Start or Colour Start.

Paper Size

When copying on paper other than A4 size, you must change the Paper Size setting. You can only copy on A4, A5, A3, Photo (10 × 15 cm), Letter, Legal, Ledger or Folio paper.

1. Load your document.
2. Press  (Copy).
3. Enter the number of copies you want.
4. Press Options.
5. Press ▲ or ▼ to display Paper Size.
6. Press Paper Size.
7. Press ▲ or ▼ to display A4, A5, A3, 10x15cm, Letter, Legal, Ledger or Folio and then press the option you want to set.

NOTE

If you are using the manual feed slot, insert only one sheet of paper at a time. (See *Loading paper in the manual feed slot* on page 13.)

8. Press OK.
9. Press Mono Start or Colour Start.

6 Scanning to a computer

Before scanning

To use the machine as a scanner, install a scanner driver. If the machine is on a network, configure it with a TCP/IP address.

- Install the scanner drivers from the CD-ROM. (See Quick Setup Guide.)
- Configure the machine with a TCP/IP address if network scanning does not work.

  (See Online User's Guide.)

How to scan a document as a PDF file using ControlCenter4 (Windows®)

(For detailed information, see Online User's Guide.)

NOTE

- The screens on your PC may vary depending on your model.
- This section is based on using the Advanced Mode of ControlCenter4.

ControlCenter4 is a software utility that lets you access the applications you use most often without having to manually launch specific applications.

1. Load your document. (See *How to load documents* on page 17.)

2. Click the  (**ControlCenter4**) icon in the task tray, and then click **Open**.

3. If the ControlCenter4 Mode screen appears, click the **Advanced Mode**, and then click **OK**.

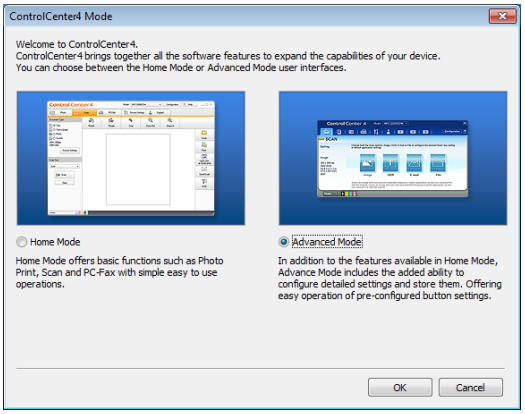

4. Select your machine from the **Model** drop-down list at the top of the screen.

5. Click the **Scan** tab. Then click **File**.



The configuration dialog box appears. Change the default settings if needed.

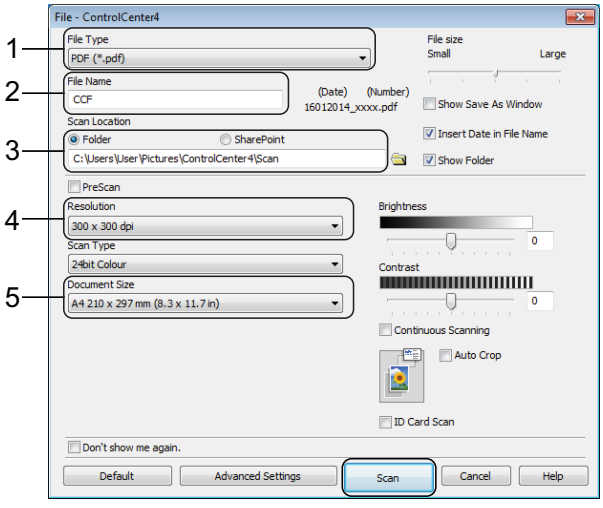

1 Select **PDF (*.pdf)** from the **File Type** drop-down list.

2 Type a file name for the document.

3 Click **Folder**. You can save the file to the default folder, or select your preferred folder by clicking the  (**Browse**) button.

4 Select a scanning resolution from the **Resolution** drop-down list.

5 Select the document size from the **Document Size** drop-down list.

6 Click **Scan**.
The machine starts scanning. The folder where the file is saved opens automatically.

How to scan a document as a PDF file using the Touchscreen

1 Load your document. (See *How to load documents* on page 17.)

2 Press  (`Scan`).

3 Press ◄ or ► to display `to File`.

4 Press `to File`.

5 If the machine is connected to a network, press the PC Name.
Do one of the following:

- To use the default settings, go to step ❿.
- To change the default settings, go to step ❻.

6 Press `Options`.

7 Press `Scan Settings`, and then press `Set at Device`.

8 Choose the settings for `Scan Type`, `Resolution`, `File Type`, `Scan Size` and `Remove Background Colour` if required.

9 Press `OK`.

10 Press `Start`.
The machine starts scanning.

NOTE

The following scan modes are available:

- `to OCR`
- `to File`
- `to Image`
- `to Media`
- `to E-mail`
- `to E-mail Server`
- `to FTP`
- `to Network`
- `to Web`
- `WS Scan` [1] (Web Services Scan)

[1] Windows® users only. (Includes Windows Vista® SP2 or later, Windows® 7 and Windows® 8) (See Online User's Guide.)

7 Printing photos from a USB flash drive

PhotoCapture Center operations (PHOTO mode)

Even if your machine is *not* connected to a computer, you can print photos directly from a USB flash drive.

How to print images

View Photos

You can preview your photos on the Touchscreen before you print them. If your photos are large files there may be a delay before each photo appears.

1. Open the media slot cover.

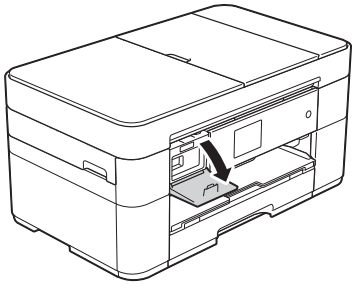

2. Put the USB flash drive in the correct slot.
3. Press `Photo`.
4. Press ◀ or ▶ to display `View Photos`.
5. Press `View Photos`.
6. Do one of the following:
   - To choose the photos you want to print, or to print multiple copies of an image, go to step ❼.
   - To print all the photos, press `Print All`. Press `Yes` to confirm. Go to step ❿.
7. Press ◀ or ▶ to display the photo you want to print, and then press it.
8. Enter the number of copies:
   - Press − or + on the Touchscreen.
   - Press the number of copies to display the dial pad on the Touchscreen, and then use it to enter the number of copies. Press `OK`.

   Press `OK`.
9. Repeat steps ❼ and ❽ until you have selected all the photos you want to print.
10. Press `OK`.
11. Read and confirm the displayed list of options.
12. Press `Print Settings` to change the paper type and paper size.

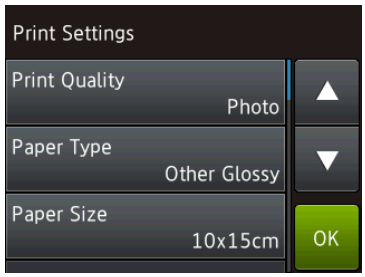

   - Press ▲ or ▼ to display `Paper Type` and press it, and then press the option you want.
   - Press ▲ or ▼ to display `Paper Size` and press it, and then press the option you want.

   Change other print settings if needed. When finished, press `OK`.
13. Press `Start`.
14. Wait until the message on the Touchscreen disappears after printing, and then remove the USB flash drive from the media slot.

PhotoCapture Center print settings overview

You can temporarily change the print settings for the next print.

The machine returns to its default settings after printing.

NOTE

You can save the print settings you use most often by setting them as the default.

(See Online User's Guide.)

8 Telephone services and external devices

Telephone services overview

You can use a range of services and connections with your Brother machine. For more information or advice on setup, see Online User's Guide.

Voicemail

If you have a voicemail service on the telephone line that your Brother machine is connected to, they may conflict with one another when receiving incoming faxes. If using this service, we suggest setting the Brother machine's `Receive Mode` to `Manual`. (See *Receive Modes* on page 30.)

Voice over Internet Protocol (VoIP)

VoIP is a type of phone system that uses an Internet connection instead of a traditional telephone line. Your machine may not work with some VoIP systems. If you have questions about how to connect your machine to the VoIP system, contact your VoIP provider.

Connecting an external telephone answering device (TAD)

You may choose to connect an external answering device to your Brother machine. To receive faxes successfully, you must connect it correctly. When recording an outgoing message on your external TAD, we recommend recording 5 seconds of silence at the beginning of your message, and limiting your speaking to 20 seconds. Set your machine's Receive Mode to `External TAD`.

External and extension telephones

You can connect a separate telephone to your machine. If you answer a fax call on an extension or external telephone, you can make your machine receive the fax by pressing ✳ **5 1**. If the machine answers a voice call and fast double rings for you to take over, press **# 5 1** to take the call on an extension telephone.

9 Sending a fax

How to send a fax

1 Do one of the following:

- Place the document *face up* in the ADF. (See *Using the ADF* on page 17.)
- Place your document *face down* on the scanner glass. (See *Using the scanner glass* on page 18.)

NOTE

- To send faxes with multiple pages, use the ADF.
- If you send a mono fax from the ADF when the memory is full, it will be sent immediately.
- You can use the scanner glass to fax pages of a book one at a time. The documents can be up to A4 or Letter size.

2 Do one of the following:

- When Fax Preview is set to `Off`, press  (`Fax`).
- When Fax Preview is set to `On`, press  (`Fax`) and then  (`Sending Faxes`).
- The Touchscreen displays:

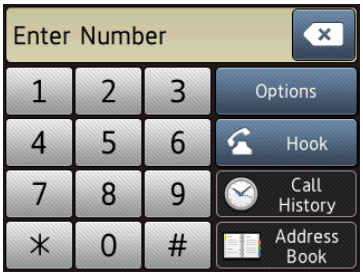

3 To change the fax-sending settings, press `Options`. Press ▲ or ▼ to scroll through the fax settings. When the setting you want is displayed, press it and choose your new option. When you have finished changing options, press `OK`.

For more advanced fax-sending operations and settings, see Online User's Guide.

- Fax Resolution
- Contrast
- Glass Scan Size
- Colour Fax Transmission
- Preview Outgoing Fax
- Faxing at the end of a call
- Broadcasting
- Real Time Transmission
- Overseas Mode
- Delayed Fax
- Batch Transmission
- Cancelling Waiting Jobs
- Set New Default
- Factory Reset
- Polled Transmit
- Transmission Verification Report

4 Enter the fax number.

Using the dial pad on the Touchscreen.

Using  (Address Book)

- Address Book

Using  (Call History)

- Redial
- Outgoing Call
- Caller ID history

NOTE

To preview a fax message before sending it, set Preview to On.

(See Online User's Guide.)

5 Press Fax Start.

Faxing from the ADF

- The machine starts scanning the document to be sent.

Faxing from the scanner glass

- If you select Mono in Colour Setting (default setting), the machine starts scanning the first page. Go to step ❻.
- If you select Colour in Colour Setting, the Touchscreen asks if you want to send a colour fax. Press Yes (Colour fax) to confirm. The machine dials and sends the page.

6 When the Touchscreen displays Next page?, do one of the following:

- To send a single page, press No.

  The machine sends the document.
- To send more than one page, press Yes and go to step ❼.

7 Place the next page on the scanner glass.
Press OK.
The machine scans the page. (Repeat steps ❻ and ❼ for each additional page.)

Stop faxing

To stop faxing, press .

How to store numbers

Store fax and telephone numbers in your machine's Address Book or create Groups of fax recipients so you can broadcast a fax to many people at once.

NOTE

If you lose electrical power, stored Address Book numbers will not be lost.

Storing a pause

When storing Address Book numbers, you can insert one or more 3.5 second pauses by pressing Pause on the Touchscreen.

Storing Address Book numbers

You can store up to 100 Addresses with a name; each name can have two numbers.

1. Press  (Fax).
2. Press  (Address Book).
3. Press Edit.
4. Press ▲ or ▼ to display Add New Address.
5. Press Add New Address.
6. Press Name.
7. Enter the name (up to 16 characters) using the Touchscreen.
   Press OK.
   (See *Entering Text* on page 7.)
8. Press Address 1.
9. Enter the first fax or telephone number (up to 20 digits) using the Touchscreen.
   Press OK.

NOTE

- Be sure to include the area code when entering a fax or telephone number. Depending on the country, the Caller ID names and history may not be displayed correctly if the area code is not registered with the fax or telephone number.
- *If you downloaded the Internet Fax (I-Fax) feature:*

  To store an email address to use with Internet Fax (I-Fax) or Scan to E-mail server, press  and enter the email address, and then press OK.

10. To store a second fax or telephone number, press Address 2.
    Enter the fax or telephone number (up to 20 digits) using the Touchscreen.
    Press OK.
11. Press OK to confirm.
12. Do one of the following:
    - To store another Address Book number, repeat steps ❸ to ⓫.
    - When finished, press .

How to set your Station ID

Set your machine's Station ID so that the date and time appear on each fax you send.

1. Press  (Settings).
2. Press All Settings.
3. Press ▲ or ▼ to display Initial Setup.
4. Press Initial Setup.
5. Press ▲ or ▼ to display Station ID.
6. Press Station ID.
7. Press Fax.
8. Enter your fax number (up to 20 digits) using the Touchscreen, and then press OK.
9. Press Name.
10. Enter your name (up to 20 characters) using the Touchscreen, and then press OK.
    (See *Entering Text* on page 7.)
11. Press .

10 Receiving a fax

Receive Modes

By factory default, the factory setting of Receive Mode is "Fax Auto". Your machine will automatically receive any faxes that are sent to it. There are four receive modes of this machine as below. For more detailed information on the receive modes: See *Using Receive Modes* on page 31.

Touchscreen Display	Factory Default Ring Delay
Fax Auto	Ring Delay: 4 times Fax detection: On
Fax/Tel	Ring Delay: 4 times
External TAD	
Manual	

To set the Receive Mode follow the instructions:

1. Press  (Settings).
2. Press Receive Mode.
3. Press ▲ or ▼ to display Fax Auto, Fax/Tel, External TAD or Manual, and then press the option you want.
4. Press .

Using Receive Modes

Mode	Function	Help
Fax Auto	Each call recognized as fax and send fax signal. However, you can answer the call within the number of rings.	Factory setting of Ring Delay is 4 (0-10 times available, See *Ring Delay* on page 32). After ringing 4 times, the fax machine send fax-receiving signals automatically; Tip: If your machine is connecting an external answering phone device, and often use it to answer incoming calls, you could set the ring time through 4 to 6 times. Within the recommended ringing times, you can use the external answering phone device to answer and talk. [1]
Fax/Tel	Automatically determine whether the incoming call is telephone or fax calls. Non-Fax call will make a fast double-ring to inform you answer the phone.	Factory setting of Ring Delay is 4 (0-10 times available, See *Ring Delay* on page 32. According to incoming call after the fax machine rings 4 times: 1) For the fax call, send fax received signal; 2) For the telephone call, make a fast double-ring, waiting for you answer the phone. Tip: If your machine is connecting an external answering phone device, you could set the ringing time through 4 to 6 times to answer the call. [1]
External TAD	The external answering machine (TAD) automactically answers every call. Voice messages are stored on the external TAD. Fax messages are printed.	Use this mode if you have connected an external answering machine to your machine. The TAD setting works only with an external answering machine. Note: Ring Delay do not work in this setting.
Manual	Machine doesn't recognize each call, only as a common phone call that you need to determine after answering the phone.	Answering the call, or if the caller wants to send you a fax, press Fax Start (under easy mode) to receive faxes. Tip: If your machine is connecting an external answering phone device, you can use the external answering phone device to answer and talk. [1]

[1] If the caller wants to send a fax during a call or the caller sends you a fax call, please press FaxStart (under easy mode) on the Touchscreen or press ✳ 51 keys on the external answering phone device to give fax receiving signals. To do so, you have to turn on the remote codes first. (see Online User's Guide.)

Receive Mode settings

Ring Delay

Ring Delay sets the number of times the machine rings before it answers in `Fax Auto` or `Fax/Tel` mode. If you have external or extension telephones on the same line as the machine, choose the maximum number of rings.

(See Online User's Guide.)

1. Press  (`Settings`).
2. Press `All Settings`.
3. Press ▲ or ▼ to display `Fax`.
4. Press `Fax`.
5. Press ▲ or ▼ to display `Setup Receive`.
6. Press `Setup Receive`.
7. Press ▲ or ▼ to display `Ring Delay`.
8. Press `Ring Delay`.
9. Press ▲ or ▼ to display the options, and then press the number of times the machine will ring before it answers.
   If you select `0`, the machine will answer immediately and the line will not ring at all.
10. Press .

A Routine maintenance

How to clean and check the machine

Cleaning the scanner glass

1. Unplug the machine from the electrical socket.
2. Lift the document cover (1). Clean the scanner glass (2) and the white plastic (3) with a soft lint-free cloth moistened with a non-flammable glass cleaner.

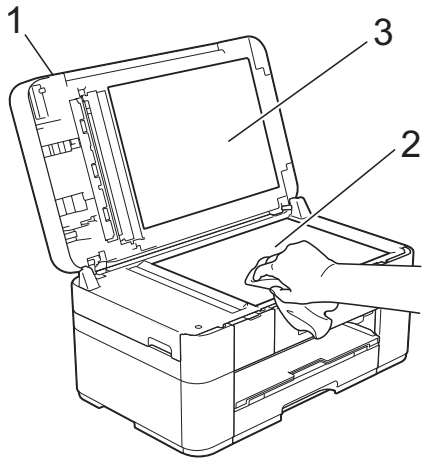

3. In the ADF unit, clean the white bar (1) and the glass strip (2) with a lint-free cloth moistened with a non-flammable glass cleaner.

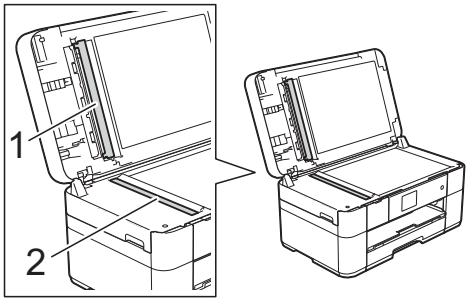

Checking the print quality

If faded or streaked colours and text appear on your printouts, some of the print head nozzles may be clogged. Check this by printing the Print Quality Check Sheet and looking at the nozzle check pattern.

1. Press .

NOTE

You can also press  (`Settings`), and then press `Maintenance`.

2. Press ▲ or ▼ to display `Improve Print Quality`.
3. Press `Improve Print Quality`.
4. Press `Check Print Quality`.
5. Following the instructions on the Touchscreen, load A4 or Letter size plain paper in the paper tray, and then press `Start`. The machine prints the Print Quality Check Sheet.
6. Check the quality of the four colour blocks on the sheet.

7 The Touchscreen displays a message asking about the print quality.
Do one of the following:

- If all lines are clear and visible, press No to finish the Print Quality check, and then go to step ⓫.
- If you can see missing short lines as shown in the illustration, press Yes.

OK

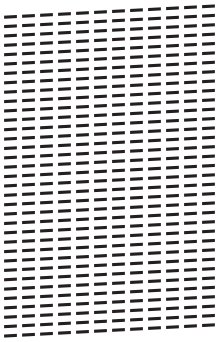

Poor

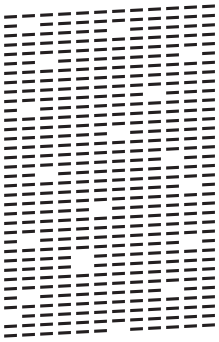

8 The Touchscreen prompts you to check the print quality of each colour. Following the instructions on the Touchscreen, press 1, 2, 3 or 4 to select the example most similar to the Print Quality Check Sheet for each colour.

9 If you press number 2, 3, or 4, the Touchscreen prompts you to start cleaning.
Press Start.

10 After the cleaning procedure is finished, press Yes, and return to step ❺.

11 Press .

If you clean the print head at least five times and the print has not improved, try installing a new Brother Original Innobella replacement ink cartridge for each problem colour. Try cleaning the print head up to five more times. If the print has not improved, contact Brother customer service or your local Brother dealer.

IMPORTANT

DO NOT touch the print head. Touching the print head may cause permanent damage and may void the print head's warranty.

NOTE

When a print head nozzle is clogged, the printed sample looks like this.



Letter, A4 and Executive



A3, Ledger, Legal, Folio, A5, A6, envelopes, Photo (10 × 15 cm), Photo L (89 × 127 mm), Photo 2L (13 × 18 cm) and Index Card (127 × 203 mm)

After the print head nozzle is cleaned, the horizontal lines are gone.



Checking the print alignment

If your printed text becomes blurred or images become faded, you may need to adjust the print alignment after transporting the machine.

1. Press .

NOTE

You can also press  (Settings) and then Maintenance.

2. Press ▲ or ▼ to display Improve Print Quality.
3. Press Improve Print Quality.
4. Press Alignment.
5. Press Next.
6. Press ▲ or ▼ to display the paper size options and then press the paper size that needs a print alignment adjustment, and then press it.
7. Press Basic alignment or Advanced alignment.
8. Following the instructions on the Touchscreen, load plain paper of the selected size in the paper tray, and then press Start.
   The machine prints the Alignment Check Sheet.

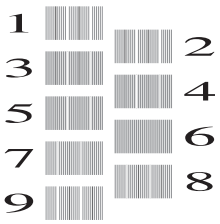

9. For the “A” pattern, press ▲ or ▼ to display the number of the test print that has the least visible vertical stripes (1-9), and press it. Then press OK.
   In the example, number 6 is the best choice.
10. Do one of the following:
    - If you selected Basic alignment, repeat step 9 for patterns B to H.
    - If you selected Advanced alignment, repeat step 9 for patterns B to Z.

NOTE

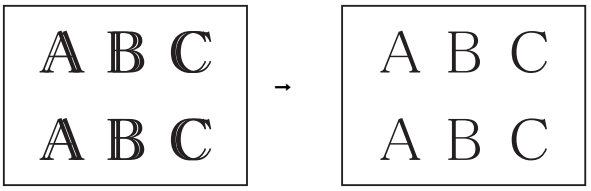

When the print alignment is not adjusted correctly, text looks blurry.

After the print alignment is adjusted correctly, text looks sharp.

11. Press .

NOTE

For more information about cleaning and checking the machine, see Online User’s Guide.

A

B Troubleshooting

If you think there is a problem with your machine, check each of the items below first and follow the troubleshooting tips.

You can correct most problems yourself. If you need additional help, the Brother Solutions Center offers the latest FAQs and troubleshooting tips.

Visit http://support.brother.com.

Identifying the problem

First, check the following:

- The machine's power cord is connected correctly and the machine is powered on.
- All of the protective parts have been removed.
- Paper is loaded correctly in the paper tray.
- The interface cables are securely connected to the machine and the computer, or the wireless connection is set up on both the machine and your computer.
- Touchscreen Messages

  (See *Error and maintenance messages* on page 37.)

If you did not solve the problem with the above checks: See *If you are having difficulty with your machine* on page 55.

Error and maintenance messages

As with any sophisticated office product, errors may occur and supplies must be replaced. If this happens, your machine identifies the error or required routine maintenance and displays the appropriate message. The most common error and maintenance messages are shown in the following table.

Error Message	Cause	Action
`B&W 1-sided Print Only` `Replace ink.`	One or more of the colour ink cartridges have reached the end of their life. You can use the machine in monochrome mode for approximately four weeks depending on the number of pages you print. While this message appears on the Touchscreen, each operation works in the following way: ■ Printing If the media type is set to **Plain Paper** in the **Basic** tab and **Greyscale** is chosen in the **Advanced** tab of the printer driver, you can use the machine as a monochrome printer. 2-sided printing is not available when this message appears. ■ Copying If the paper type is set to `Plain Paper` you can make copies in monochrome. 2-sided copying is not available when this message appears. ■ Faxing If the paper type is set to `Plain Paper` or `Inkjet Paper`, the machine will receive and print the faxes in monochrome. If a sending machine has a colour fax, the machine's "handshake" will ask that the fax be sent as monochrome.	Replace the ink cartridges. (See Online User's Guide.) **NOTE** The machine will stop all print operations, you cannot use the machine until a new ink cartridge is installed in the following cases: • If you unplug the machine or take out the ink cartridge. • (Windows®) If you select **Slow Drying Paper** in the **Basic** tab of the printer driver. (Macintosh) If you select **Slow Drying Paper** in the **Print Settings** drop-down list of the printer driver.

Error Message	Cause	Action
Cannot Detect	You installed a new ink cartridge too quickly and the machine did not detect it.	Take out the new ink cartridge and reinstall it slowly and firmly until the cartridge lever lifts. (See Online User's Guide.)
	An ink cartridge is not installed correctly.	
	A used ink cartridge was reinstalled.	Remove the used ink cartridge and install a new one.
	If you are using non Brother Original ink, the machine may not detect the ink cartridge.	Replace the cartridge with a Brother Original ink cartridge. If the error message remains, contact Brother customer service or your local Brother dealer.
	The ink cartridge must be replaced.	Replace the ink cartridge with a new, genuine Brother ink cartridge.
	The new ink cartridge has an air bubble.	Slowly turn the ink cartridge so that the ink supply port is pointing downward, and then reinstall the cartridge.
	The wrong Brother model ink cartridge was installed.	Check the model numbers of the ink cartridges and install the correct ink cartridges. (See *Supplies* on page 71.)
Cannot Print Replace ink.	One or more of the ink cartridges have reached the end of their life. The machine will stop all print operations. While memory is available, monochrome faxes will be stored in the memory. If a sending machine has a colour fax, the machine's "handshake" will ask that the fax be sent as monochrome.	Replace the ink cartridges. (See Online User's Guide.)
Current Tray Settings	These messages are displayed when the Check Paper setting to confirm the paper type and size is enabled.	To not display this confirmation message, set the Check Paper setting to Off. (See *Check Paper setting* on page 16.)
Comm. Error	Poor telephone line quality caused a communication error.	Send the fax again or connect the machine to another telephone line. If the problem continues, call the telephone company and ask them to check your telephone line.
Connection Failed	You tried to poll a fax machine that is not in Polled Waiting mode.	Check the other fax machine's polling setup.

Error Message	Cause	Action
Data Remaining in Memory	Print data is left in the machine's memory.	Press . The machine will cancel the job and clear it from the memory. Try to print again.
Disconnected	The other person or other person's fax machine stopped the call.	Try to send or receive again. If calls are stopped repeatedly and you are using a VoIP (Voice over IP) system, try changing the Compatibility to Basic(for VoIP). (See *Telephone Line Interference or VoIP System* on page 65.)
Document Jam/too Long	The document was not inserted or fed correctly, or the document scanned from the ADF was too long.	(See *Using the ADF* on page 17.) (See *Document jam* on page 47.)
High Temperature	The room temperature is too high.	After lowering the room temperature, allow the machine to cool down to room temperature. Try again when the machine has cooled down.
Hub is Unusable.	A hub or USB flash drive with hub has been connected to the USB direct interface.	Hubs, including USB flash drives with built-in hubs, are not supported. Unplug the device from the USB direct interface.
Image Too Long	The proportions of your photo are irregular so effects could not be added.	Choose a regularly proportioned image.
Image Too Small	The size of your photo is too small to trim.	Choose a larger image.

Error Message	Cause	Action
Ink Absorber Pad Full	The ink absorber box or flushing box is full. These components are periodic maintenance items that may require replacement after a period of time to ensure optimum performance from your Brother machine. Because these components are periodic maintenance items, the replacement is not covered under the warranty. The need to replace these items and the time period before replacement is dependent on the number of purges and flushes required to clean the ink system. These boxes acquire amounts of ink during the different purging and flushing operations. The number of times a machine purges and flushes for cleaning varies depending on different situations. For example, frequently powering the machine on and off will cause numerous cleaning cycles since the machine automatically cleans itself upon power up. The use of non-Brother ink may cause frequent cleanings because non-Brother ink could cause poor print quality, which is resolved by cleaning. The more cleaning the machine requires, the faster these boxes will fill up. **NOTE** *Repairs resulting from the use of non-Brother supplies may not be covered under the stated product warranty.*	The ink absorber box or flushing box must be replaced. Contact Brother customer service or your local Brother Authorised Service Centre to have your machine serviced. Other reasons for cleaning are: 1 After a paper jam has been cleared, the machine automatically cleans itself before the next received fax page is printed. 2 The machine automatically cleans itself after sitting idle for more than 30 days (infrequent use). 3 The machine automatically cleans itself after ink cartridges of the same colour have been replaced 12 times.
Ink Absorber Pad NearFull	The ink absorber box or flushing box is nearly full.	The ink absorber box or flushing box must be replaced soon. Contact Brother customer service or your local Brother dealer.
Ink Low	One or more of the ink cartridges are near the end of their life. If one of the colour ink cartridges is near the end of its life and someone is sending you a colour fax, your machine's "handshake" will ask that the fax be sent as monochrome. If the sending machine has the ability to convert it, the colour fax will be printed at your machine as a monochrome fax.	Order a new ink cartridge. You can continue printing until the Touchscreen displays Cannot Print. (See Online User's Guide.)

Error Message	Cause	Action
Low Temperature	The room temperature is too low.	After increasing the room temperature, allow the machine to warm up to room temperature. Try again when the machine has warmed up.
Media is Full.	The USB flash drive you are using already contains 999 files.	Your machine can save to your USB flash drive only if it contains less than 999 files. Delete unused files and try again.
	The USB flash drive you are using does not have enough free space to scan the documents.	Press . Delete unused files from your USB flash drive to make some free space, and then try again.
No Caller ID	There is no incoming call history. You did not receive calls or you have not subscribed to the Caller ID service from your telephone company.	If you want to use the Caller ID feature, call your telephone company. (See Online User's Guide.)
No Ink Cartridge	An ink cartridge is not installed correctly.	Take out the new ink cartridge and reinstall it slowly and firmly until the cartridge lever lifts. (See Online User's Guide.)

Error Message	Cause	Action
No Paper Fed	The machine is out of paper, or paper is not correctly loaded in the paper tray.	Do one of the following: ■ Refill the paper tray, and then press OK on the Touchscreen. ■ Remove and reload the paper, then press OK on the Touchscreen. (See *Before loading paper* on page 8.)
	The paper tray was not fully inserted.	Remove the paper tray and reinstall it until it locks into place, and then press OK on the Touchscreen.
	The paper was not inserted in the centre position of the manual feed slot.	Remove the paper and re-insert it in the centre of the manual feed slot, and then press OK on the Touchscreen. (See *Loading paper in the manual feed slot* on page 13.)
	The Jam Clear Cover is not closed correctly.	Make sure the Jam Clear Cover is closed evenly at both ends. (See *Printer jam or paper jam* on page 49.)
	Paper dust has accumulated on the surface of the paper pick-up rollers.	Clean the paper pick-up rollers. (See Online User's Guide.)
	The paper is jammed in the machine.	Remove the jammed paper by following the steps. (See *Printer jam or paper jam* on page 49.)
		If this error occurs often during 2-sided copying or 2-sided printing, the paper feed rollers may be stained with ink. Clean the paper feed rollers. (See Online User's Guide.)
Out of Fax Memory	The fax memory is full.	Do one of the following: ■ Clear the data from the memory. To gain extra memory, you can turn off Memory Receive. (See Online User's Guide.) ■ Print the faxes that are in the memory. (See Online User's Guide.)

Error Message	Cause	Action
Out of Memory	The machine's memory is full.	**If a fax-sending or copy operation is in progress:** ■ Press or Quit or Close and wait until the other operations that are in progress finish, and then try again. ■ Press Send Now to send the pages scanned so far. ■ Press Partial Print to copy the pages scanned so far. ■ Clear the data in the memory. To gain extra memory, you can turn off Memory Receive. (See Online User's Guide.) ■ Print the faxes that are in the memory. (See Online User's Guide.)
Paper Jam [Front] Paper Jam [Front,Rear] Paper Jam [Rear]	The paper is jammed in the machine.	Remove the jammed paper by following the steps. (See *Printer jam or paper jam* on page 49.)
		If there is a repeat paper jam, try another paper jam operation. (See *Additional paper jam clear operations* on page 53.)
Paper Tray not detected	The paper tray is not completely inserted.	Slowly push the paper tray completely into the machine.
	Jammed paper or a foreign object has prevented the paper tray from being inserted properly.	Pull the paper tray out of the machine and remove the paper or foreign object. If you cannot find or remove the jammed paper, follow the steps. (See *Printer jam or paper jam* on page 49.) Slowly push the paper tray completely into the machine.
Touchscreen Init. Failed	The Touchscreen was pressed before the power on initialisation was completed.	Make sure that nothing is touching or resting on the Touchscreen, especially when plugging in the machine.
	Debris may be stuck between the lower part of the Touchscreen and its frame.	Insert a piece of stiff paper between the lower part of the Touchscreen and its frame and slide it back and forth to push out the debris.

Error Message	Cause	Action
Unable to Clean XX Unable to Initialize XX Unable to Print XX	The machine has a mechanical problem. **—OR—** A foreign object, such as a paper clip or a piece of ripped paper, is in the machine.	Open the scanner cover and remove any foreign objects and paper scraps from inside the machine. If the error message continues, disconnect the machine from the power for several minutes, and then reconnect it. You can try additional paper jam clear operations. (See *Additional paper jam clear operations* on page 53.) (The machine can be turned off without losing faxes stored in the memory. (See *Transferring your faxes or Fax Journal report* on page 46.))
Unable to Scan XX	The machine has a mechanical problem.	Disconnect the machine from the power for several minutes, and then reconnect it. The machine can be turned off without losing faxes stored in the memory. (See *Transferring your faxes or Fax Journal report* on page 46.)
Unusable Device Disconnect device from front connector & turn machine off & then on	A broken device has been connected to the USB direct interface.	Unplug the device from the USB direct interface, and then press  to turn the machine off and then on again.
Unusable Device Please disconnect USB device.	An unsupported USB device or flash drive was connected to the USB direct interface.	Unplug the device from the USB direct interface. Turn the machine off and then on again.

Error Message	Cause	Action
Wrong Paper	The paper size setting does not match the size of paper in the tray.	1 Check that the paper size you choose on the Touchscreen matches the size of the paper in the tray. (See *Set Paper Size and Type* on page 15.) 2 Make sure you load the paper in the proper orientation, and set the paper guides to the indicators for your paper size. (See *Before loading paper* on page 8.) 3 After you have checked the paper size and the paper orientation, press OK on the Touchscreen.
	The paper orientation is incorrect for the paper size.	
	You did not set the paper guides in the tray to the indicators for the paper size you are using.	If you are printing from your computer, make sure the paper size you choose in the printer driver matches the size of paper in the tray. (See Online User's Guide.)

Error animations

Error animations display step-by-step instructions when paper gets jammed. You can read the steps at your own pace by pressing ▶ to see the next step and ◀ to see the previous step.

Transferring your faxes or Fax Journal report

If the Touchscreen displays:

- Unable to Clean XX
- Unable to Initialize XX
- Unable to Print XX
- Unable to Scan XX

We recommend transferring your faxes to another fax machine or to your PC.
(See *Transferring faxes to another fax machine* on page 46.)
(See *Transferring faxes to your PC* on page 46.)

Transfer the Fax Journal report to see if there are any faxes you must transfer.
(See *Transferring the Fax Journal report to another fax machine* on page 47.)

Transferring faxes to another fax machine

If you have not set up your Station ID, you cannot enter fax transfer mode.
(See *How to set your Station ID* on page 29.)

1. Press  to temporarily interrupt the error.
2. Press  (Settings).
3. Press All Settings.
4. Press ▲ or ▼ to display Service.
5. Press Service.
6. Press Data Transfer.
7. Press Fax Transfer.
8. Do one of the following:
   - If the Touchscreen displays No Data, there are no faxes in the machine's memory.

     Press Close, and then press .
   - Enter the fax number where faxes will be forwarded.
9. Press Fax Start.

Transferring faxes to your PC

Transfer faxes from your machine's memory to your PC.

1. Press  to temporarily interrupt the error.
2. Make sure you have installed **MFL-Pro Suite** on your PC, and then turn on **PC-FAX Receive** on the PC. Do one of the following:

   (Windows® XP, Windows Vista® and Windows® 7)

   From  (**Start**), select **All Programs**, **Brother**, **Brother Utilities**, **MFC-XXXX**, **PC-FAX Receive**, and select **Receive**. (Where XXXX is your model name.)

   (Windows® 8)

   Click  (**Brother Utilities**), and then click the drop-down list and select your model name (if not already selected). Click **PC-FAX Receive** in the left navigation bar, and then click **Receive**.

3 Make sure you have set PC-Fax Receive on the machine. (See Online User's Guide.) If faxes are in the machine's memory when you set up PC-Fax Receive, the Touchscreen displays a message asking if you want to transfer the faxes to your PC.

4 Do one of the following:

- To transfer all faxes to your PC, press `Yes`. If Fax Preview is set to `Off`, the Touchscreen displays a message asking if you also want to turn on the backup print option.
- To exit and leave the faxes in the machine's memory, press `No`.

5 Press .

Transferring the Fax Journal report to another fax machine

If you have not set up your Station ID, you cannot enter fax transfer mode.
(See *How to set your Station ID* on page 29.)

1 Press to temporarily interrupt the error.

2 Press (`Settings`).

3 Press `All Settings`.

4 Press ▲ or ▼ to display `Service`.

5 Press `Service`.

6 Press `Data Transfer`.

7 Press `Report Transfer`.

8 Enter the fax number where the Fax Journal report will be forwarded.

9 Press `Fax Start`.

Document jam

Documents can jam in the ADF if they are not inserted or fed correctly, or if they are too long. Follow the steps to clear a document jam.

Document is jammed in the top of the ADF

1 Take out any paper from the ADF that is not jammed.

2 Open the ADF cover.

3 Remove the jammed document by pulling it upward.

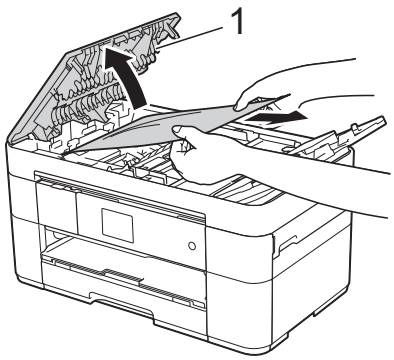

1 ADF cover

NOTE

If you cannot remove the jammed paper, open the feed tray (1) and then remove the jammed paper.

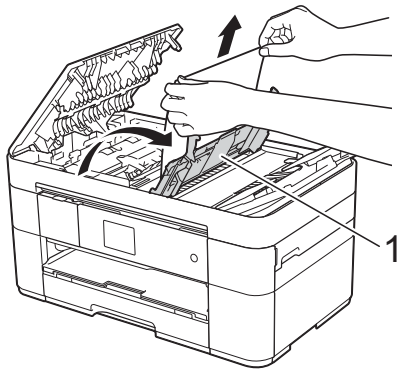

Close the feed tray before closing the ADF cover.

B

4 Close the ADF cover.

5 Press .

IMPORTANT

To avoid document jams, close the ADF cover correctly by pushing it gently in the centre.

Document is jammed inside the ADF

1 Take any paper that is not jammed out of the ADF.

2 Lift the document cover.

3 Pull the jammed document out to the right.

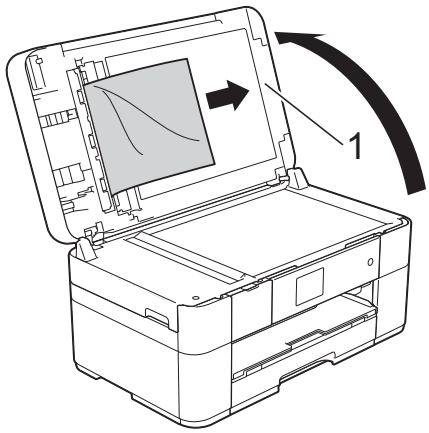

1 Document Cover

4 Close the document cover.

5 Press .

Small document is jammed in the ADF

1 Lift the document cover.

2 Insert a piece of stiff paper, such as cardstock, into the ADF to push any small paper scraps through.

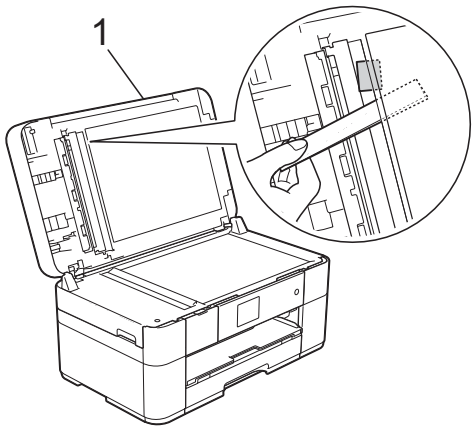

1 Document Cover

3 Close the document cover.

4 Press .

Printer jam or paper jam

Follow these steps to locate and remove the jammed paper if the Touchscreen displays:
`Paper Jam [Front]` or
`Paper Jam [Front,Rear]`

NOTE

If the Touchscreen displays `Paper Jam [Rear]`, see page 51.

1. Unplug the machine from the electrical socket.
2. Pull the paper tray (1) completely out of the machine.

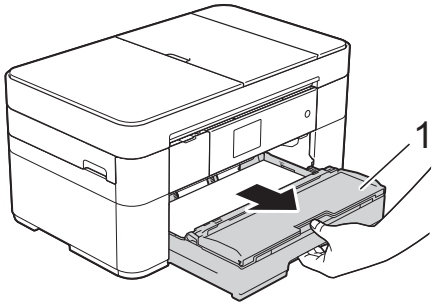

3. Pull out the jammed paper (1).

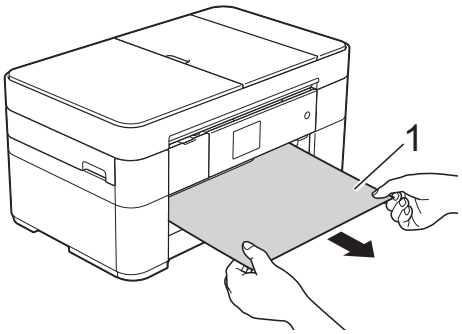

4. Lift the Jam Clear Flap, and remove the jammed paper.

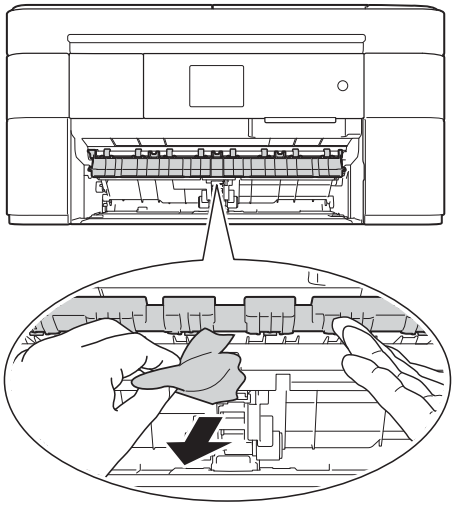

5. Make sure you look carefully inside the machine above and below the Jam Clear Flap for scraps of paper.

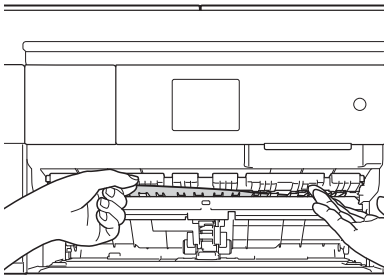

6. Put the paper tray firmly back in the machine.

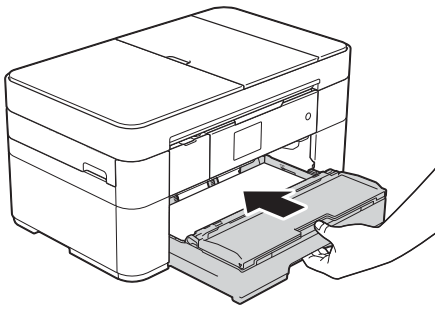

B

7 Using both hands, use the finger holds on each side of the machine to lift the scanner cover (1) into the open position.

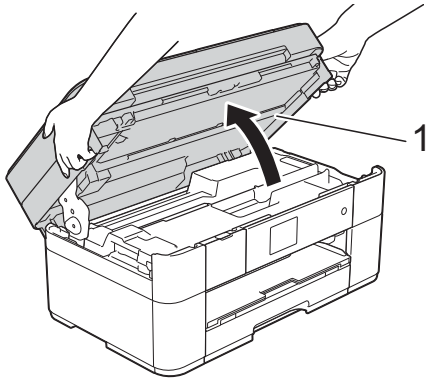

8 Slowly pull the jammed paper (1) out of the machine.

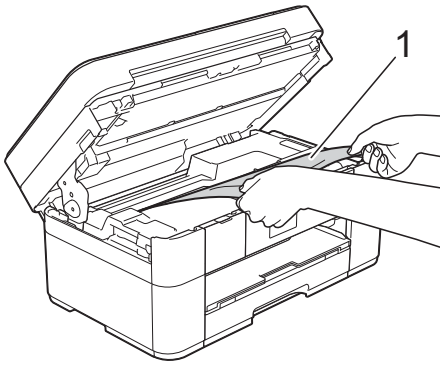

9 Move the print head (if necessary) to reach any paper remaining in this area. Make sure no jammed paper is left in the corners of the machine (1) and (2).

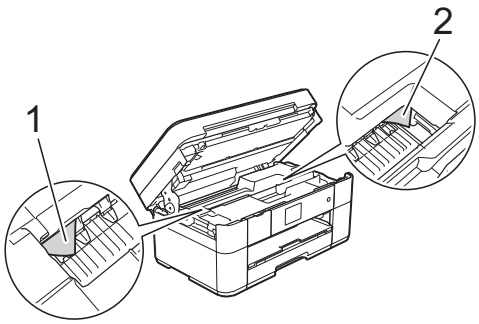

IMPORTANT

- If paper is jammed under the print head, unplug the machine from the power source, and then move the print head to reach the paper.
- If the print head is in the right corner as shown in the illustration, you cannot move the print head. Reconnect the power cord.

  Hold down ✕ until the print head moves to the centre. Then unplug the machine from the power source and remove the paper.

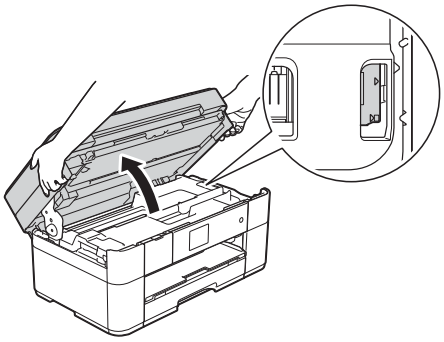

- If ink gets onto your skin, immediately wash with soap and plenty of water.

10 Gently close the scanner cover using the finger holds on each side.

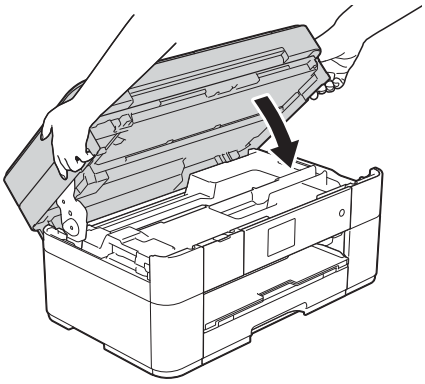

Do one of the following:

- If the Touchscreen displays `Paper Jam [Front]`, go to step ⓯.
- If the Touchscreen displays `Paper Jam [Front,Rear]`, go to step ⓫.

11 Open the Jam Clear Cover (1) at the back of the machine.

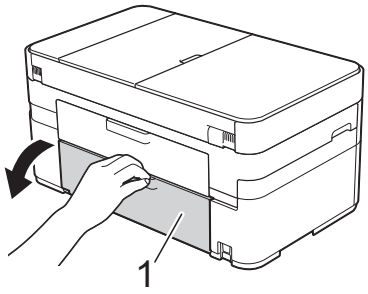

12 Open the inside cover (1).

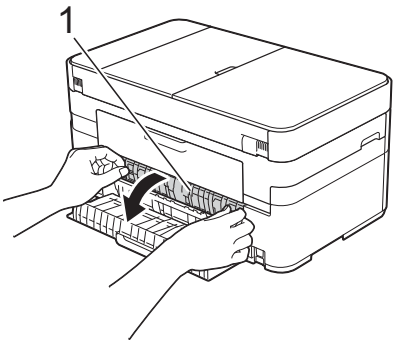

13 Make sure you look carefully inside for jammed paper. If paper is jammed, slowly pull it out of the machine.

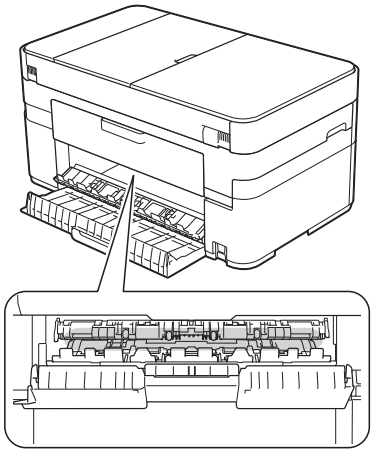

14 Close the inside cover and Jam Clear Cover. Make sure the covers are closed completely.

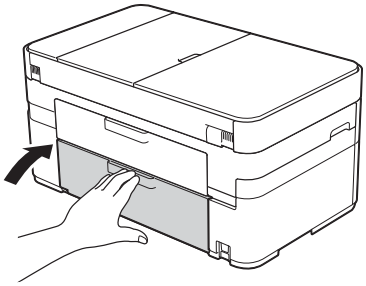

15 Pull out the paper support (1) until it locks into place, and then unfold the paper support flap (2).

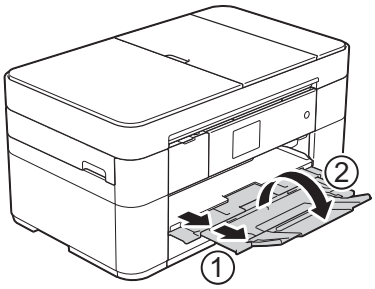

16 Reconnect the power cord.

If the Touchscreen displays `Paper Jam [Rear]`, follow these steps:

1 Unplug the machine from the AC power outlet.

2 Open the Jam Clear Cover (1) at the back of the machine.

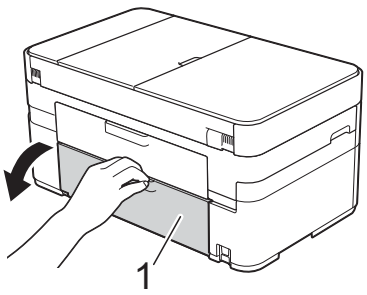

B

3 Open the inside cover (1).

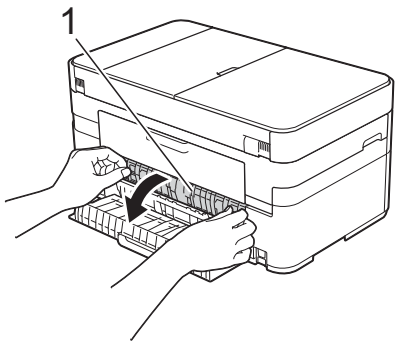

4 Slowly pull the jammed paper out of the machine.

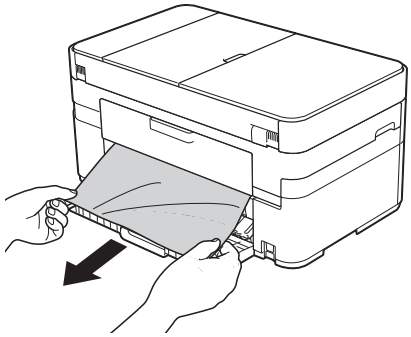

5 Close the inside cover and Jam Clear Cover. Make sure the covers are closed properly.

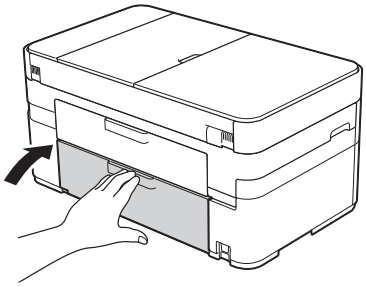

6 Using both hands, use the finger holds on each side of the machine to lift the scanner cover (1) into the open position.

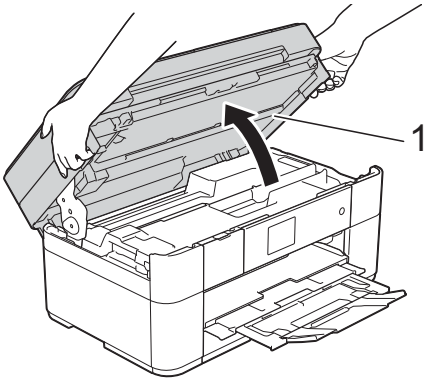

7 Slowly pull the jammed paper (1) out of the machine.

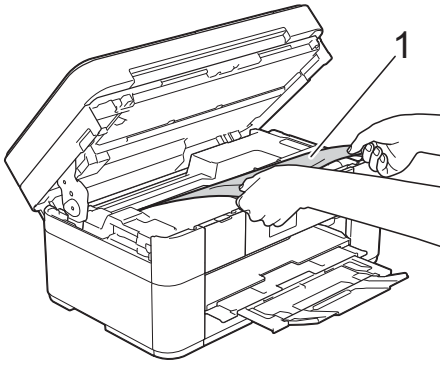

8 Move the print head (if necessary) to reach any paper remaining in this area. Make sure no jammed paper is left in the corners of the machine (1) and (2).

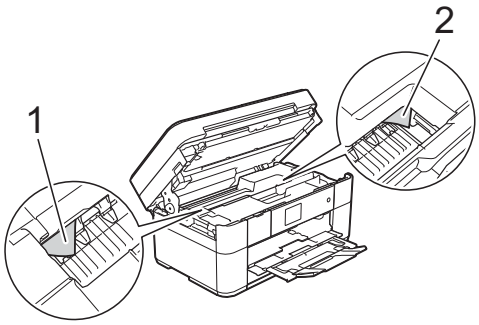

IMPORTANT

- If paper is jammed under the print head, unplug the machine from the power source, and then move the print head to reach the paper.
- If the print head is in the right corner as shown in the illustration, you cannot move the print head. Reconnect the power cord.

  Hold down ✕ until the print head moves to the centre. Then unplug the machine from the power source and remove the paper.

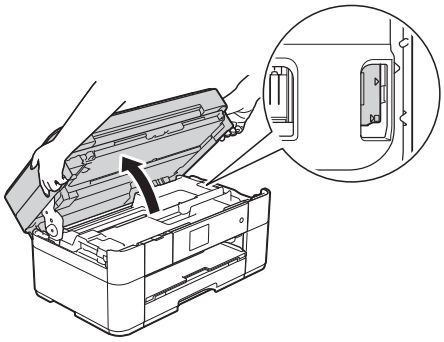

- If ink gets onto your skin, immediately wash with soap and plenty of water.

9 Gently close the scanner cover using the finger holds on each side.

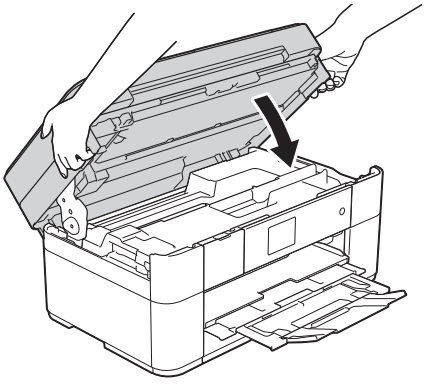

10 Reconnect the power cord.

NOTE

If there is a repeat paper jam, a small scrap of paper may be stuck in the machine. (See *Additional paper jam clear operations* on page 53.)

Additional paper jam clear operations

1 If you experience paper jams repeatedly (3 times or more), the Touchscreen displays a message asking if you want to remove paper scraps from the machine.
Press `Yes` to return to the Home screen.

2 Press  (`Settings`).

3 Press `Maintenance`.

4 Press ▲ or ▼ to display `Remove Paper Scraps`.

5 Press `Remove Paper Scraps`.

6 Follow the instructions on the Touchscreen to locate and remove the jammed paper.

NOTE

During the procedure, you must load the Maintenance sheet (included with your machine) in Landscape position in the manual feed slot. (If you do not have the Maintenance sheet, use one sheet of A4 or Letter size thicker paper, such as glossy paper.)

Troubleshooting for Wireless LAN setup

Wireless LAN report

After you configure the wireless LAN settings of the machine, a wireless LAN report will be printed automatically.

If the printed report shows that the connection failed, check the error code on the printed report and refer to the following instructions.

Error code	Recommended Solutions
TS-01	The wireless setting is not activated, change the wireless setting to ON. ■ If a network cable is connected to your machine, disconnect it and change your machine's wireless setting to ON.
TS-02	Your wireless access point/router cannot be detected. Please try the following: ■ Check that you are selecting the correct SSID (network name) and are entering the correct network key. ■ Check that your wireless access point/router is not using additional security settings, such as MAC address filtering. ■ Try moving the device closer to your wireless access point/router. After it is connected to the network, you should be able to move it back to its previous location.
TS-04	An unsupported authentication/encryption method has been detected on your wireless access point/router. ■ Your wireless access point/router is using an authentication/encryption method that is not supported by the device. Check that you are selecting the correct SSID (network name).
TS-05	The specified SSID or network key are incorrect. ■ Check that you are selecting the correct SSID (network name) and are entering the correct network key.
TS-06	The specified wireless security information is incorrect. ■ Check the authentication/encryption method that you are selecting and make sure you are entering the correct network key.
TS-07	The machine cannot detect a wireless access point/router that has WPS or AOSS™ enabled. ■ If you would like to configure your wireless settings using WPS or AOSS™, you must set up WPS or AOSS™ on both your machine and the wireless access point/router. Confirm your wireless access point/router supports WPS or AOSS™ and try starting again.
TS-08	Two or more wireless access points with WPS or AOSS™ enabled are detected. ■ Try starting again after a few minutes to avoid interference from other access points.

If you are having difficulty with your machine

IMPORTANT

Using non-Brother supplies may affect the print quality, hardware performance, and machine reliability.

If you think there is a problem with your machine, check the following tables of troubleshooting tips. You can correct most problems by yourself.

If you need additional help, the Brother Solutions Center offers the latest FAQs and troubleshooting tips.

Visit http://support.brother.com.

NOTE

For technical help, contact Brother customer support.

Printing Difficulties

Difficulty	Suggestions
The headers or footers appear when the document is displayed on the screen but they do not show up when it is printed.	There is an unprintable area on the top and bottom of the page. Adjust the top and bottom margins in your document to allow for this. (See Online User's Guide.)
Print speed is too slow.	Try changing the printer driver setting. The highest resolution needs longer data processing, sending and printing time. Try the other quality settings in the printer driver as follows: (Windows®) Click **Colour Settings** on the **Advanced** tab, and make sure you clear **Colour Enhancement**. (Macintosh) Choose **Color Settings**, click **Advanced Color Settings**, and make sure you clear **Color Enhancement**.
	Turn the Borderless feature off. Borderless printing is slower than normal printing. (See Online User's Guide.)

Print Quality Difficulties

Difficulty	Suggestions
Poor print quality.	Check the print quality. (See *Checking the print quality* on page 33.)
	Make sure that the **Media Type** setting in the printer driver or the `Paper Type` setting in the machine's menu matches the type of paper you are using. (See *Set Paper Size and Type* on page 15.) (See Online User's Guide.)
	Make sure that your ink cartridges are fresh. The following may cause ink to clog: ■ The expiration date written on the cartridge package has passed. (Brother Original cartridges stay usable for up to two years if kept in their original packaging.) ■ The ink cartridge has been in your machine for over six months. ■ The ink cartridge may not have been stored correctly before use.
	Make sure you are using Brother Original Innobella ink. Brother does not recommend the use of cartridges other than Brother Original cartridges or the refilling of used cartridges with ink from other sources.
	Make sure you are using one of the recommended types of paper. (See Online User's Guide.)
	The recommended environment for your machine is between 20 °C to 33 °C.
White horizontal lines appear in text or graphics.  A4, Letter and Executive  A3, Ledger, Legal, Folio, A5, A6, envelopes, Photo (10 × 15 cm), Photo L (89 × 127 mm), Photo 2L (13 × 18 cm) and Index Card (127 × 203 mm)	Check the print quality. (See *Checking the print quality* on page 33.)
	Make sure you are using Brother Original Innobella ink.
	Try using the recommended types of paper. (See Online User's Guide.)
	To prolong print head life, provide the best ink cartridge economy and maintain print quality, we do not recommend frequently unplugging the machine and/or leaving the machine unplugged for extended periods of time. We recommend using to power down the machine. Using allows minimal power to the machine, resulting in periodic, but less frequent cleaning of the print head.

Print Quality Difficulties (continued)

Difficulty	Suggestions
The machine prints blank pages.	Check the print quality. (See *Checking the print quality* on page 33.)
	Make sure you are using Brother Original Innobella ink.
	To prolong print head life, provide the best ink cartridge economy and maintain print quality, we do not recommend frequently unplugging the machine and/or leaving the machine unplugged for extended periods of time. We recommend using  to power down the machine. Using  allows minimal power to the machine, resulting in periodic, but less frequent cleaning of the print head.
Characters and lines are blurred.	Check the printing alignment. (See *Checking the print alignment* on page 35.)
Printed text or images are skewed.	Make sure the paper is loaded correctly in the paper tray and the paper guides are adjusted correctly. (See *Before loading paper* on page 8.)
	Make sure the Jam Clear Cover is closed correctly.
Smudge or stain at the top centre of the printed page.	Make sure the paper is not too thick or curled. (See Online User's Guide.)
Printing appears dirty or ink seems to run.	Make sure you are using the recommended types of paper. (See Online User's Guide.) Do not handle the paper until the ink is dry.
	Make sure the printing surface is face down in the paper tray.
	Make sure you are using Brother Original Innobella ink.
	If you are using photo paper, make sure that you have set the correct paper type. If you are printing a photo from your PC, set the **Media Type** in the printer driver.
Ink is smudged or wet when using glossy photo paper.	Be sure to check the front and back of the paper. Place the glossy surface (printing surface) face down. (See *Set Paper Size and Type* on page 15.)
	If you use glossy photo paper, make sure that the paper type setting is correct.
Printouts appear dirty or the paper jams when using A3 paper.	(Windows® printing) Select **Slow Drying Paper** in the **Basic** tab of the printer driver.
	(Macintosh printing) Select **Print Settings** from the drop-down list and then check **Slow Drying Paper** of the printer driver.
	(Copy) Adjust the copy density to make copies lighter. (See Online User's Guide.)
Stains appear on the reverse side or at the bottom of the page.	Make sure the printer platen is not dirty with ink. (See Online User's Guide.)
	Make sure you are using Brother Original Innobella ink.
	Make sure you are using the paper support flap. (See *Before loading paper* on page 8.)
	Make sure the paper feed rollers are not dirty with ink. (See Online User's Guide.)
The machine prints dense lines on the page.	(Windows®) Select **Reverse Order** in the **Basic** tab of the printer driver.

Print Quality Difficulties (continued)

Difficulty	Suggestions
The printouts are wrinkled.	(Windows®) In the printer driver **Advanced** tab, click **Colour Settings** and clear **Bi-Directional Printing**. (Macintosh) In the printer driver, choose **Print Settings**, click **Advanced**, choose **Other Print Options** and clear **Bi-Directional Printing**.
	Make sure you are using Brother Original Innobella ink.

Paper Handling Difficulties

Difficulties	Suggestions
Photo paper does not feed correctly.	When you print on Brother Photo paper, load one extra sheet of the same photo paper in the paper tray. An extra sheet has been included in the paper package for this purpose.
Machine feeds multiple pages.	Do the following: (See *Before loading paper* on page 8.) ■ Make sure the paper is loaded correctly in the paper tray. ■ Remove all the paper from the tray and fan the stack of paper well, then put it back in the tray. ■ Make sure you do not push the paper in too far.
	Make sure the Jam Clear Cover is closed correctly. (See *Printer jam or paper jam* on page 49.)
	Make sure the Base Pad in the paper tray is not dirty. (See Online User's Guide.)
There is a paper jam.	Remove the jammed paper by following the steps. (See *Printer jam or paper jam* on page 49.) Make sure the paper guides are set to the correct paper size. Do not extend the paper tray when you load A5 or smaller size paper.
Paper jam reoccurs.	If there is a repeat paper jam, a small piece of paper may be stuck in the machine. Make sure paper is not still jammed in the machine. (See *Additional paper jam clear operations* on page 53.)

Printing Received Faxes

Difficulty	Suggestions
■ Condensed print ■ Horizontal streaks ■ Top and bottom sentences are cut off ■ Missing lines	This is usually caused by a poor telephone connection. Make a copy; if your copy looks good, you probably had a bad connection with static or interference on the telephone line. Ask the other party to re-send the fax.
Vertical black lines when receiving.	The sender's scanner may be dirty. Ask the sender to make a copy to see if the problem is with the sending machine. Try receiving from another fax machine.
Left and right margins are cut off or a single page is printed on two pages.	If the received faxes are divided and printed on two pages or if you get an extra blank page, your paper size setting may not be correct for the paper you are using. (See *Set Paper Size and Type* on page 15.)
	Turn on `Auto Reduction`. (See Online User's Guide.)

Telephone Line or Connections

Difficulty	Suggestions
Dialling does not work. (No dial tone)	Check all line cord connections. Make sure the telephone line cord is plugged into the telephone wall socket and the LINE socket inside the machine.
	Change the Tone/Pulse setting. (See Online User's Guide.)
	Send a manual fax by pressing `Hook` and dialling the number. Wait to hear fax-receiving tones before pressing `Fax Start`.
	If there is no dial tone, connect a known-working telephone and telephone line cord to the socket. Then lift the external telephone's handset and listen for a dial tone. If there is still no dial tone, ask your telephone company to check the line and/or wall socket.
The machine does not answer when called.	Make sure the machine is in the correct Receive Mode for your setup. (See *Receive Modes* on page 30.) Check for a dial tone. If possible, call your machine to hear it answer. If there is still no answer, check the telephone line cord connection. If there is no ringing when you call your machine, ask your telephone company to check the line.

Receiving Faxes

Difficulty	Suggestions
Cannot receive a fax.	Make sure your machine has a dial tone by pressing Hook in Fax mode. If you hear static or interference on your fax line, call your local telephone provider.
	Check all line cord connections. Make sure the telephone line cord is plugged into the telephone wall socket and the LINE socket inside the machine. If you subscribe to DSL or VoIP services, contact your service provider for connection instructions. If you have problems due to possible interference on the telephone line, you can change the compatibility setting. (See *Telephone Line Interference or VoIP System* on page 65.)
	Make sure the machine is in the correct Receive Mode. This is determined by the external devices and telephone subscriber services you have on the same line as the Brother machine. (See *Receive Modes* on page 30.) If you have a dedicated fax line and want your Brother machine to automatically answer all incoming faxes, select Fax Auto mode. If your Brother machine shares a line with an external answering machine, select External TAD mode. In External TAD mode, your Brother machine will automatically receive incoming faxes and voice callers will be able to leave a message on your answering machine. If your Brother machine shares a line with other telephones and you want it to automatically answer all incoming faxes, select Fax/Tel mode. In Fax/Tel mode, your Brother machine will automatically receive faxes and produce a fast double-ring to alert you to answer voice calls. If you do not want your Brother machine to automatically answer incoming faxes, select Manual mode. In Manual mode, you must answer every incoming call and activate the machine to receive faxes.
	Another device or service at your location may be answering the call before your Brother machine answers. To test this, lower the Ring Delay setting: ■ If the Receive Mode is set to Fax Auto or Fax/Tel, reduce the Ring Delay to 1 ring. (See *Ring Delay* on page 32.) ■ If the Receive Mode is set to External TAD, reduce the number of rings programmed on your answering machine to 2. ■ If the Receive Mode is set to Manual, DO NOT adjust the Ring Delay setting. Have someone send you a test fax: ■ If you received the test fax successfully, your machine is operating correctly. Remember to reset your Ring Delay or answering machine setting back to your original setting. If receiving problems recur after resetting the Ring Delay, then a person, device, or subscriber service is answering the fax call before the machine has a chance to answer. ■ If you were not able to receive the fax, then another device or subscriber service may be interfering with your fax reception or there may be a problem with your fax line.

Receiving Faxes (continued)

Difficulty	Suggestions
Cannot receive a fax. (continued)	If you are using a telephone answering machine (External TAD mode) on the same line as the Brother machine, make sure your answering machine is set up correctly. (See Online User's Guide.) 1 Connect the external TAD correctly. (See Online User's Guide.) 2 Set your answering machine to answer in one or two rings. 3 Record the outgoing message on your answering machine. ■ Record five seconds of silence at the beginning of your outgoing message. ■ Limit your speaking to 20 seconds. ■ End your outgoing message with your Remote Activation Code for people sending manual faxes. For example: "After the beep, leave a message or press ✳ **5 1** and **Start** to send a fax." 4 Set your answering machine to answer calls. 5 Set your Brother machine's Receive Mode to External TAD. (See *Receive Modes* on page 30.)
	Make sure your Brother machine's Fax Detect feature is turned On. Fax Detect is a feature that allows you to receive a fax even if you have answered the call on an external or extension telephone. (See Online User's Guide.)
	If you often get transmission errors due to possible interference on the telephone line, try changing the Compatibility setting to Basic(for VoIP). (See *Telephone Line Interference or VoIP System* on page 65.)

Sending Faxes

Difficulty	Suggestions
Cannot send a fax.	Check all line cord connections. Make sure the telephone line cord is plugged into the telephone wall socket and the LINE socket inside the machine.
	Print the Transmission Verification Report and check for an error. (See Online User's Guide.)
	Ask the other party to check that the receiving machine has paper.
Poor fax send quality.	Try changing your resolution to Fine or S.Fine. Make a copy to check your machine's scanner operation. If the copy quality is poor, clean the scanner. (See *Cleaning the scanner glass* on page 33.)

Sending Faxes (continued)

Difficulty	Suggestions
Transmission Verification Report says RESULT:ERROR.	There is probably temporary noise or static on the line. Try sending the fax again. If you send a PC FAX message and get RESULT:ERROR on the Transmission Verification Report, your machine may be out of memory. To gain extra memory, you can turn off Memory Receive, print fax messages from the machine's memory or cancel a Delayed Fax or Polling Job. (See Online User's Guide.) If the problem continues, ask the telephone company to check your telephone line.
	If you often get transmission errors due to possible interference on the telephone line, try changing the machine's Compatibility setting to Basic(for VoIP). (See *Telephone Line Interference or VoIP System* on page 65.)
Vertical black lines when sending.	Black vertical lines on faxes you send are typically caused by dirt or correction fluid on the glass strip. Clean the glass strip. (See *Cleaning the scanner glass* on page 33.)

Handling Incoming Calls

Difficulty	Suggestions
The machine "hears" a voice as a CNG Tone.	If Fax Detect is set to On, your machine is more sensitive to sounds. It may mistakenly interpret certain voices or music on the line as a fax machine calling and respond with fax-receiving tones. Deactivate the machine by pressing . Try avoiding this problem by turning Fax Detect to Off. (See Online User's Guide.)
Sending a fax call to the machine.	If you answered on an extension or external telephone, press your Remote Activation Code (the factory default is ✳ **5 1**. If you answered on an external telephone, press Fax Start, and then press Receive to receive the fax. When your machine answers, hang up.
Custom features on a single line.	If you have Call Waiting, Call Waiting/Caller ID, Caller ID, Voice Mail, an answering machine, an alarm system or other custom feature on a single telephone line with your machine, it may create a problem sending or receiving faxes. **For example:** If you subscribe to Call Waiting or another custom service and its signal comes through the line while your machine is sending or receiving a fax, the signal can temporarily interrupt the fax. Brother's ECM (Error Correction Mode) feature should help overcome this problem. This condition is related to the telephone system industry and is common to all devices that send and receive information on a single, shared line with custom features. If avoiding a slight interruption is crucial to your business, we recommend using a separate telephone line with no custom features.

Copying Difficulties

Difficulty	Suggestions
Vertical black lines or streaks appear in copies.	Black vertical lines on copies are typically caused by dirt or correction fluid on the glass strip. Clean the glass strip, scanner glass, and the white bar and white plastic above them. (See *Cleaning the scanner glass* on page 33.)
Black marks or spots appear in copies.	Black marks or spots on copies are typically caused by dirt or correction fluid on the scanner glass. Clean the scanner glass and white plastic above it. (See *Cleaning the scanner glass* on page 33.)
Poor copy results when using the ADF.	Try using the scanner glass. (See *Using the scanner glass* on page 18.)
Fit to Page does not work correctly.	Make sure your source document is not skewed. Reposition the document and try again.

Scanning Difficulties

Difficulty	Suggestions
Poor scanning results when using the ADF.	Clean the white bar and the glass strip underneath it. (See *Cleaning the scanner glass* on page 33.)
■ Vertical black lines appear in the scanned data.	Try using the scanner glass. (See *Using the scanner glass* on page 18.)

PhotoCapture Center Difficulties

Difficulty	Suggestions
Removable Disk does not work correctly.	1 Take out the USB flash drive and put it back in again. 2 If you have tried “Eject” from within Windows®, take out the USB flash drive before you continue. 3 If an error message appears when you try to eject the USB flash drive, it means the card is being accessed. Wait a while, and then try again. 4 If all of the above do not work, turn off your PC and machine, and then turn them on again.
Part of my photo is missing when printed.	Make sure that Borderless printing and Cropping are turned off. (See Online User’s Guide.)

Software Difficulties

Difficulty	Suggestions
Cannot install software or print.	(Windows®) Run the **Repair MFL-Pro Suite** program on the CD-ROM. This program will repair and reinstall the software.

Network Difficulties

Difficulty	Suggestions
Cannot print over the network.	Make sure that your machine is powered on, and is online and in the Ready mode. Print a Network Configuration Report (see Online User's Guide) and check the current Network settings printed in this list. Reconnect the LAN cable to the hub to verify that the cabling and network connections are good. If you are using a wireless connection or are having network problems, see Online User's Guide.
The network scanning feature does not work.	It is necessary to configure the third-party Security/Firewall Software to allow Network scanning. Add port 54925 for Network scanning. (See Online User's Guide.)
The network PC-Fax Receive feature does not work.	(Windows®) It is necessary to set the third-party Security/Firewall Software to allow PC-FAX Rx. Add port 54926 for Network PC-FAX Rx. (See Online User's Guide.)
The Brother software cannot be installed.	(Windows®) Allow network access to the following programs if your security software displays an alert message during MFL-Pro Suite installation. (Macintosh) If you are using a firewall function of anti-spyware or antivirus security software, temporarily disable it and then install the Brother software.
Cannot connect to wireless network.	Investigate the problem using the `WLAN Report`. Press  (`Settings`), `All Settings`, and then press ▲ or ▼ to display `Print Reports`. Press `Print Reports`. Press ▲ or ▼ to display `WLAN Report`, and then press `WLAN Report`. (See Online User's Guide.)

Dial Tone detection

When sending a fax, by default your machine will wait for a fixed amount of time before it starts to dial the number. By changing the Dial Tone setting to Detection, you can make your machine dial as soon as it detects a dial tone. This setting can save time when sending a fax to many different numbers. If you change the setting and start having problems when dialling, you should change it back to the No Detection setting.

1. Press  (Settings).
2. Press All Settings.
3. Press ▲ or ▼ to display Initial Setup.
4. Press Initial Setup.
5. Press ▲ or ▼ to display Dial Tone.
6. Press Dial Tone.
7. Press Detection or No Detection.
8. Press .

Telephone Line Interference or VoIP System

If you are having problems sending or receiving a fax due to possible interference on the telephone line, or if you are using a VoIP system, we recommend that you change the modem speed to minimise errors in fax operations.

1. Press  (Settings).
2. Press All Settings.
3. Press ▲ or ▼ to display Initial Setup.
4. Press Initial Setup.
5. Press ▲ or ▼ to display Compatibility.
6. Press Compatibility.
7. Press Normal or Basic(for VoIP).
   - Basic(for VoIP) reduces the modem speed to 9,600 bps and turns off colour fax receiving and Error Correction Mode (ECM), except for colour fax-sending. Unless interference is a recurring problem on your telephone line, you may prefer to use it only when needed.

     To improve compatibility with most VoIP services, Brother recommends changing the compatibility setting to Basic(for VoIP).
   - Normal sets the modem speed at 14,400 bps.
8. Press .

NOTE

- VoIP (Voice over IP) is a type of phone system that uses an Internet connection, rather than a traditional phone line.
- Brother does not recommend the use of a VoIP line. VoIP limitations in general can cause some functions of the fax machine not to work correctly.

Machine Information

Checking the serial number

You can see the machine's serial number on the Touchscreen.

1. Press  (Settings).
2. Press All Settings.
3. Press ▲ or ▼ to display Machine Info.
4. Press Machine Info.
5. Press Serial No.
   Your machine's serial number will appear on the Touchscreen.
6. Press .

Checking the firmware version

You can see the machine's firmware version on the Touchscreen.

1. Press  (Settings).
2. Press All Settings.
3. Press ▲ or ▼ to display Machine Info.
4. Press Machine Info.
5. Press Firmware Version.
6. Press Main Version.
   Your machine's firmware version will appear on the Touchscreen.
7. Press .

Reset operations overview

The following reset operations are available:

1 Machine Reset

You can reset all the machine's settings that you have changed, such as the date and time and Ring Delay.

2 Network

You can reset the print server back to its default factory settings, such as the password and IP address information.

3 Address Book & Fax

Address Book & Fax resets the following settings:

- Address Book

  (Address Book and Setup Groups)
- Programmed fax jobs in the memory

  (Polled Transmit, Delayed Fax and Delayed Batch Transmission)
- Station ID

  (Name and Number)
- Remote Fax Options

  (Fax Forwarding)
- Report settings

  (Transmission Verification Report, Address Book and Fax Journal)
- History

  (Caller ID history and Outgoing Call)
- Faxes in memory

4 All Settings

You can restore all settings to the factory default.

Brother strongly recommends performing this procedure before handing over or disposing of the machine.

NOTE

Unplug the network cable before you choose Network or All Settings.

How to reset the machine

1. Press  (Settings).
2. Press All Settings.
3. Press ▲ or ▼ to display Initial Setup.
4. Press Initial Setup.
5. Press ▲ or ▼ to display Reset.
6. Press Reset.
7. Press ▲ or ▼ to display the type of reset (Machine Reset, Network, Address Book & Fax or All Settings), and then press it.
8. Press Yes to confirm.
9. Press Yes for two seconds to reboot the machine.

C Index

A

Address Book
  setting up 29
ADF (automatic document feeder) 17
Automatic
  fax receive 30

C

Cleaning
  scanner 33
Control panel overview 2
ControlCenter
  See Online User's Guide.
Copy
  paper size 21
  paper type 21
  using scanner glass 18
Custom telephone features on a single line 62

D

Dialling
  a pause 28
Document
  loading 17, 18

E

Envelopes 8, 13
Error messages on Touchscreen 37

F

Fax, from PC
  See Online User's Guide.
Fax, stand-alone
  receiving 30
    difficulties 59, 60
    Ring Delay, setting 32
    telephone line interference or VoIP system 65
  sending 27
    difficulties 61
    telephone line interference or VoIP system 65
Fax/Tel mode
  Ring Delay 32

J

Jams
  document 47
  paper 49

L

LCD (Liquid Crystal Display) 2

M

Manual
  receive 30
Manual feed slot 13

N

Network
  Printing
    See Online User's Guide.
  Scanning
    See Online User's Guide.

P

Paper
  Check Paper setting 16
  loading 8
  size of document 17
  type 15
PhotoCapture Center
  from PC
    See Online User's Guide.
  Preview photos 24
Print
  difficulties 55
  paper jams 49
Printing
  See Online User's Guide.

R

Receive Mode
  External TAD 30
  Fax Auto 30
  Fax/Tel 30
  Manual 30
Ring Delay, setting 32

S

Scanning
  See Online User's Guide.
Supplies 71

T

TAD (telephone answering device),
external 30
  Receive Mode 30
Telephone line
  difficulties 59
  interference or VoIP system 65
Text, entering 7
Transferring your faxes or
Fax Journal report 46
Troubleshooting
  document jam 47
  error and maintenance messages on
  Touchscreen 37
  if you are having difficulty
    copying 63
    document jam 47
    incoming calls 62
    Network 64
    paper handling 58
    PhotoCapture Center 63
    print quality 56
    printing 55
    printing received faxes 59
    receiving faxes 60
    scanning 63
    software 63
    telephone line or connections 59
  paper jam 49
  wireless LAN setup
    Wireless LAN report 54

W

Wireless Network
  See Quick Setup Guide and Online User's Guide.

C

Supplies

Ink	The machine uses individual Black, Yellow, Cyan and Magenta ink cartridges that are separate from the print head assembly.
Service Life of Ink Cartridge	The first time you install a set of ink cartridges the machine will use an amount of ink to fill the ink delivery tubes for high quality printouts. This process will only happen once. After this process is complete the cartridges provided with your machine will have a lower yield than the Super High Yield replacement cartridges. With all following ink cartridges you can print the specified number of pages.

Replacement Supplies

<Super High Yield Black>LC699XLBK

<Super High Yield Yellow>LC695XLY

<Super High Yield Cyan>LC695XLC

<Super High Yield Magenta>LC695XLM

Black - Approximately 2,400 pages [1]

Yellow, Cyan and Magenta - Approximately 1,200 pages [1]

[1] Approx. cartridge yield is declared in accordance with ISO/IEC 24711.

For more information about the replacement consumables, visit us at http://www.brother.com/pageyield.

What is Innobella?

Innobella is a range of genuine supplies offered by Brother. The name "Innobella" derives from the words "Innovation" and "Bella" (meaning "Beautiful" in Italian) and is a representation of the "innovative" technology providing you with "beautiful" and "long lasting" print results.

When you print photo images, Brother recommends Innobella glossy photo paper (BP71 series) for high quality. Brilliant prints are made easier with Innobella Ink and paper.

BROTHER CREATIVECENTER

If you're using Windows®, double-click the Brother CreativeCenter icon on your desktop to access our **FREE** website designed as a resource to help you easily create and print customized materials for business and home use with photos, text and creative touch.

Mac users can access Brother CreativeCenter at this web address: http://www.brother.com/creativecenter

brother

Visit us on the World Wide Web
http://www.brother.com

This machine is approved for use in the country of purchase only. Local Brother companies or their dealers will support only machines purchased in their own countries.

Brother Earth

www.brotherearth.com