Online User's Guide

MFC-J3530DW
MFC-J3930DW

!CAUTION Before using this product, read carefully these instructions for correct operation.
Keep the User's Guide in a secure place for future reference.

© 2017 Brother Industries, Ltd. All rights reserved.

Table of Contents

Before You Use Your Brother Machine 1
Definitions of Notes 2
Trademarks 3
Important Note 4
Introduction to Your Brother Machine 5
Before Using Your Machine 6
Control Panel Overview 7
Touchscreen LCD Overview 10
New Information from Brother 18
Settings Screen Overview 20
Navigate the Touchscreen 22
Set the Ready Screen 24
Set the Default Screen of the Copy and Scan Mode 25
Access Brother Utilities (Windows) 26
Uninstall the Brother Software and Drivers (Windows) 27
Paper Handling 28
Load Paper 29
Load Paper in Paper Tray #1 / Paper Tray #2 30
Load Paper in the Multi-purpose Tray (MP Tray) 45
Load Paper in the Manual Feed Slot 50
Unprintable Area 54
Paper Settings 55
Acceptable Paper and Other Print Media 60
Load Documents 70
Load Documents in the Automatic Document Feeder (ADF) 71
Load Documents on the Scanner Glass 73
Unscannable Area 74
Print 75
Print from Your Computer (Windows) 76
Print a Photo (Windows) 77
Print a Document (Windows) 78
Cancel a Print Job (Windows) 79
Print More Than One Page on a Single Sheet of Paper (N in 1) (Windows) 80
Print as a Poster (Windows) 81
Print on Both Sides of the Paper Automatically (Automatic 2-sided Printing) (Windows) 82
Print as a Booklet Automatically (Windows) 85
Print a Colour Document in Greyscale (Windows) 87
Prevent Smudged Printouts and Paper Jams (Windows) 88
Use a Preset Print Profile (Windows) 89
Change the Default Print Settings (Windows) 92
Print Settings (Windows) 93
Print from Your Computer (Mac) 98
Print a Photo (Mac) 99
Print a Document (Mac) 100
Print on Both Sides of the Paper Automatically (Automatic 2-sided Printing) (Mac) 101

Print More Than One Page on a Single Sheet of Paper (N in 1) (Mac) 102
Print a Colour Document in Greyscale (Mac) 103
Prevent Smudged Printouts and Paper Jams (Mac) 104
Print Options (Mac) 105
Print Data Directly from a USB Flash Drive 111
Compatible USB Flash Drives 112
Print Photos Directly from a USB Flash Drive 113
Scan 126
Scan Using the Scan Button on Your Brother Machine 127
Scan Multi-page Letter or A4 Size Documents 128
Scan Photos and Graphics 129
Save Scanned Data to a Folder as a PDF File 132
Save Scanned Data to a USB Flash Drive 135
Scan Multiple Business Cards and Photos (Auto Crop) 139
Scan to an Editable Text File Using OCR 141
Scan to Email Attachment 144
Send Scanned Data to an Email Server 147
Scan to FTP 150
Scan to Network (Windows) 156
Web Services for Scanning on Your Network (Windows Vista SP2 or greater, Windows 7, Windows 8 and Windows 10) 164
Change Scan Button Settings from ControlCenter4 (Windows) 169
Change Scan Button Settings from ControlCenter2 (Mac) 173
Scan from Your Computer (Windows) 177
Scan Using ControlCenter4 Home Mode (Windows) 178
Scan Using ControlCenter4 Advanced Mode (Windows) 195
Scan Using Nuance™ PaperPort™ 14 or Other Windows Applications 212
Scan Using Windows Photo Gallery or Windows Fax and Scan 217
Install BookScan Enhancer and Whiteboard Enhancer (Windows) 221
Scan from Your Computer (Mac) 222
Scan Using ControlCenter2 (Mac) 223
Scan Using TWAIN-Compliant Applications (Mac) 239
Configure Scan Settings Using Web Based Management 242
Set the Scan Job Email Report Using Web Based Management 243
Copy 244
Copy a Document 245
Enlarge or Reduce Copied Images 248
Sort Copies 250
Make Page Layout Copies (N in 1 or Poster) 251
Copy on Both Sides of the Paper (2-sided Copy) 255
Copy an ID Card 258
Use the A3 Copy Shortcuts 260
Copy in Ink Save Mode 263
Copy Options 264
Use Preset Copy Settings 269
Fax 271
Send a Fax 272

Send a Fax from Your Brother Machine 273
Send a 2-sided Fax from the ADF 277
Send a Fax Manually 278
Send a Fax at the End of a Conversation 279
Send the Same Fax to More than One Recipient (Broadcasting) 281
Send a Fax in Real Time 285
Send a Fax at a Specified Time (Delayed Fax) 286
Change the Fax Auto Redial Setting 288
Cancel a Fax in Progress 289
Check and Cancel a Pending Fax 290
Fax Options 291
Receive a Fax 293
Receive Mode Settings 294
Fax Preview 299
Shrink Page Size of an Oversized Incoming Fax 305
Set the Fax Receive Stamp 306
Receive a Fax at the End of a Telephone Conversation 307
Memory Receive Options 309
Remote Fax Retrieval 318
Voice Operations and Fax Numbers 324
Voice Operations 325
Store Fax Numbers 328
Set up Groups for Broadcasting 335
Telephone Services and External Devices 340
Phone Line Services 341
Caller ID 342
Voice Over Internet Protocol (VoIP/Telephone Line Interference) 344
External TAD (Telephone Answering Device) 345
External and Extension Telephones 349
Fax Reports 354
Set the Transmission Verification Report's Style 355
Set the Fax Journal's Interval Period 356
PC-FAX 358
PC-FAX for Windows 359
PC-FAX for Mac(Sending only) 382
Network 385
Supported Basic Network Features 386
Network Management Software and Utilities 387
Learn about Network Management Software and Utilities 388
Additional Methods of Configuring Your Brother Machine for a Wireless Network 389
Before Configuring Your Brother Machine for a Wireless Network 390
Configure Your Machine for a Wireless Network Using the One Push Method of Wi-Fi Protected Setup™ (WPS) 391
Configure Your Machine for a Wireless Network Using the PIN Method of Wi-Fi Protected Setup™ (WPS) 392
Configure Your Machine for a Wireless Network When the SSID is Not Broadcast 395
Configure Your Machine for an Enterprise Wireless Network 398

Use Wi-Fi Direct® 403
Advanced Network Features 415
Print the Network Configuration Report 416
Fax Using the Internet (I-Fax) 417
Synchronize Time with the SNTP Server Using Web Based Management 439
Technical Information for Advanced Users 443
Reset the Network Settings to Factory Default 444
Print the WLAN Report 445
Security 448
Before Using Network Security Features 449
Secure Function Lock 3.0 450
Before Using Secure Function Lock 3.0 451
Configure Secure Function Lock 3.0 Using Web Based Management 452
Scan Using Secure Function Lock 3.0 453
Configure Public Mode for Secure Function Lock 3.0 454
Additional Secure Function Lock 3.0 Features 455
Register a new ID Card Using Machine's Control Panel 456
Manage Your Network Machine Securely Using SSL/TLS 457
Certificates and Web Based Management 458
Send or Receive an Email Securely 483
Configure Email Sending or Receiving Using Web Based Management 484
Send an Email with User Authentication 485
Send or Receive an Email Securely Using SSL TLS 486
Use IEEE 802.1x Authentication for a Wired or a Wireless Network 488
What Is IEEE 802.1x Authentication? 489
Configure IEEE 802.1x Authentication for a Wired or a Wireless Network Using Web Based Management (Web Browser) 490
IEEE 802.1x Authentication Methods 492
Mobile/Web Connect 493
Brother Web Connect 494
Brother Web Connect Overview 495
Online Services Used with Brother Web Connect 496
Conditions for Using Brother Web Connect 497
Set Up Brother Web Connect 501
Scan and Upload Documents Using Brother Web Connect 510
Upload a Document from an External Memory Device Using Brother Web Connect 512
Download and Print Documents Using Brother Web Connect 514
Download and Save a Document to an External Memory Device Using Brother Web Connect 517
FaxForward to Cloud or E-mail 519
AirPrint 523
AirPrint Overview 524
Before Using AirPrint 525
Print Using AirPrint 528
Scan Using AirPrint 532
Send a Fax Using AirPrint (For MFC Models) 535
Mobile Printing for Windows 538
Mopria® Print Service 539

Brother iPrint&Scan 540
Near-Field Communication (NFC) 541
ControlCenter 542
ControlCenter4 (Windows) 543
Change the Operation Mode in ControlCenter4 (Windows) 544
Scan Using ControlCenter4 Home Mode (Windows) 546
Scan Using ControlCenter4 Advanced Mode (Windows) 547
Set Up the Brother Machine Using ControlCenter4 (Windows) 548
Create a Custom Tab Using ControlCenter4 Advanced Mode (Windows) 550
ControlCenter2 (Mac) 552
Scan Using ControlCenter2 (Mac) 553
Set Up the Brother Machine Using ControlCenter2 (Mac) 554
Turn the AutoLoad Feature On (Mac) 556
Troubleshooting 557
Error and Maintenance Messages 558
Transfer Your Faxes or Fax Journal Report 572
Error Messages When Using the Brother Web Connect Feature 577
Document Jams 579
Document is Jammed in the Top of the ADF Unit 580
Document is Jammed in the Bottom of the ADF Unit 581
Document is Jammed inside the ADF Unit 582
Remove Paper Scraps Jammed in the ADF 583
Printer Jam or Paper Jam 584
Paper is Jammed in the Front of the Machine 585
Paper is Jammed in the Back of the Machine 591
Remove Paper Scraps 596
If You Are Having Difficulty with Your Machine 597
Paper Handling and Printing Problems 598
Telephone and Fax problems 604
Other Problems 610
Network Problems 612
AirPrint Problems 622
Check the Machine Information 623
Reset Your Brother Machine 624
Reset Functions Overview 625
Routine Maintenance 626
Replace the Ink Cartridges 627
Clean Your Brother Machine 630
Clean the Scanner 631
Clean the Print Head from Your Brother Machine 633
Clean the Print Head from Your Computer (Windows) 635
Clean the Print Head from Your Computer (Mac) 636
Clean the Machine's LCD 637
Clean the Outside of the Machine 638
Clean the Machine's Printer Platen 639
Clean the Paper Feed Rollers 640
Clean the Base Pad 642

Clean the Paper Pick-up Rollers 643
Clean the Paper Pick-up Rollers for Paper Tray #2 645
Check Your Brother Machine 646
Check the Print Quality 647
Check the Print Alignment from Your Brother Machine 650
Check the Print Alignment from Your Computer (Windows) 652
Check the Print Alignment from Your Computer (Mac) 653
Check the Ink Volume 654
Monitor Machine Status from Your Computer (Windows) 656
Monitor Machine Status from Your Computer (Mac) 661
Correct the Paper Feed to Clear Vertical Lines 663
Change the Print Setting Options When Having Printing Problems 664
Pack and Ship Your Brother Machine 666
Machine Settings 669
Change Machine Settings from the Control Panel 670
In the Event of Power Failure (Memory Storage) 671
General Settings 672
Save Your Favourite Settings as a Shortcut 688
Print Reports 692
Settings and Features Tables 695
Change Machine Settings from Your Computer 727
Change Machine Settings Using Web Based Management 728
Change the Machine Settings Using Remote Setup 732
Appendix 744
Specifications 745
Supply Specifications 752
Enter Text on Your Brother Machine 753
To create a better environment 755
Brother Numbers 756

Before You Use Your Brother Machine

- Definitions of Notes
- Trademarks
- Important Note

Definitions of Notes

We use the following symbols and conventions throughout this User's Guide:

WARNING	WARNING indicates a potentially hazardous situation which, if not avoided, could result in death or serious injuries.
CAUTION	CAUTION indicates a potentially hazardous situation which, if not avoided, may result in minor or moderate injuries.
IMPORTANT	IMPORTANT indicates a potentially hazardous situation which, if not avoided, may result in damage to property or loss of product functionality.
NOTE	NOTE specifies the operating environment, conditions for installation, or special conditions of use.
	Tips icons indicate helpful hints and supplementary information.
	Electrical Hazard icons alert you to possible electrical shock.
Bold	Bold style identifies buttons on the machine's control panel or computer screen.
Italics	Italicised style emphasises an important point or refers you to a related topic.
`Courier New`	Courier New font identifies messages shown on the machine's LCD.

Related Information

- Before You Use Your Brother Machine

Trademarks

Microsoft, Windows, Windows Vista, Windows Server, SharePoint, Internet Explorer, Word, Excel, PowerPoint, and Windows Phone are either registered trademarks or trademarks of Microsoft Corporation in the United States and/or other countries.

Apple, AirPrint, Mac, Safari, iPad, iPhone, iPod touch and OS X are trademarks of Apple Inc., registered in the United States and other countries.

App Store is a service mark of Apple Inc.

Nuance and PaperPort are trademarks or registered trademarks of Nuance Communications, Inc. or its affiliates in the United States and/or other countries.

Wi-Fi®, Wi-Fi Alliance® and Wi-Fi Direct® are registered trademarks of Wi-Fi Alliance®.

WPA™, WPA2™, Wi-Fi Protected Setup™ and Wi-Fi Protected Setup™ logo are trademarks of Wi-Fi Alliance®.

Android, Gmail, Google Play, Google Chrome, Chrome OS and Google are trademarks of Google, Inc. Use of these trademarks are subject to Google Permissions.

Mozilla and Firefox are registered trademarks of the Mozilla Foundation.

The Bluetooth word mark is owned by the Bluetooth SIG, Inc. and any use of such marks by Brother Industries, Ltd. is under license.

Intel is a trademark of Intel Corporation in the U.S. and/or other countries.

Evernote and the Evernote Elephant logo are trademarks of Evernote Corporation and used under a license.

Mopria® is a registered trademark and a service mark of Mopria Alliance, Inc. in the United States and other countries. Unauthorized use is strictly prohibited.

WordPerfect is a registered trademark of Corel Corporation and/or its subsidiaries in Canada, the United States and/or other countries.

Each company whose software title is mentioned in this manual has a Software License Agreement specific to its proprietary programs.
Any trade names and product names of companies appearing on Brother products, related documents and any other materials are all trademarks or registered trademarks of those respective companies.

Related Information

- Before You Use Your Brother Machine

Important Note

- Do not use this product outside the country of purchase as it may violate the wireless telecommunication and power regulations of that country.
- Windows 10 in this document represents Windows 10 Home, Windows 10 Pro, Windows 10 Education and Windows 10 Enterprise.
- Windows Server 2008 in this document represents Windows Server 2008 and Windows Server 2008 R2.
- In this User's Guide, the LCD messages of the MFC-J3930DW are used unless otherwise specified.
- In this User's Guide, the illustrations of the MFC-J3930DW are used unless otherwise specified.
- The screens in this User's Guide are for illustration purposes only and may differ from the actual screens.
- Unless otherwise specified, the screens in this manual are from Windows 7 and OS X v10.10.x. Screens on your computer may vary depending on your operating system.
- The contents of this guide and the specifications of this product are subject to change without notice.

Related Information

- Before You Use Your Brother Machine

Introduction to Your Brother Machine

- Before Using Your Machine
- Control Panel Overview
- Touchscreen LCD Overview
- Settings Screen Overview
- Navigate the Touchscreen
- Set the Ready Screen
- Access Brother Utilities (Windows)

Before Using Your Machine

Before attempting any printing operation, confirm the following:

- Make sure you have installed the Brother software and drivers.
- For USB or network cable users: Make sure the interface cable is physically secure.

Selecting the correct type of paper

For high quality printing, it is important to select the correct type of paper. Be sure to read the information about acceptable paper before buying paper, and to determine the printable area depending on the settings in the printer driver.

Simultaneous printing, scanning and faxing

Your machine can print from your computer while sending or receiving a fax into memory or while scanning a document into the computer. Fax sending will not be stopped during printing from your computer. However, when the machine is copying or receiving a fax on paper, it pauses the printing operation, and then continues printing when copying or fax receiving has finished.

Firewall (Windows)

If your computer is protected by a firewall and you are unable to network print, network scan, or PC-FAX, you may need to configure the firewall settings. If you are using the Windows Firewall and you installed the Brother software and drivers from the CD-ROM, the necessary firewall settings have already been set. If you are using any other personal firewall software, see the User's Guide for your software or contact the software manufacturer.

Related Information

- Introduction to Your Brother Machine

Control Panel Overview

MFC-J3530DW

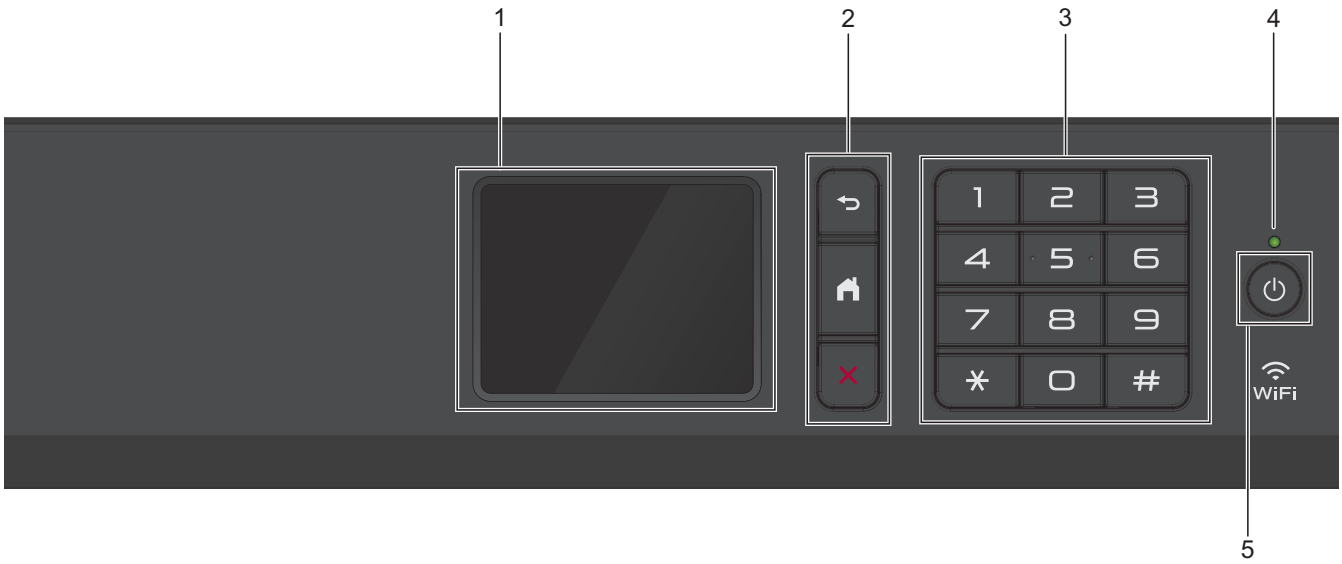

1. **Touchscreen Liquid Crystal Display (LCD)**

   Access menus and options by pressing them on the touchscreen.

   Adjust the angle of the control panel by lifting it.

   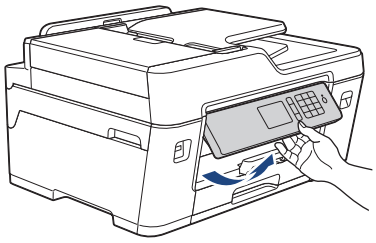

2. **Menu buttons**

   (Back)

   Press to go back to the previous menu.

   (Home)

   Press to return to the Home screen.

   (Cancel)

   Press to cancel an operation.

3. **Dial Pad**

   Press the numbers to dial telephone or fax numbers and to enter the number of copies.

4. **LED Power Indicator**

   The LED lights up depending on the machine's power status.

   When the machine is in Sleep Mode, the LED blinks.

5. **Power On/Off**

Press to turn the machine on.

Press and hold down to turn the machine off. The touchscreen will display `[Shutting Down]` and will stay on for a few seconds before turning itself off. If you have connected an external telephone or TAD, it is always available.

If you turn the machine off using , it will still clean the print head periodically to maintain print quality. To prolong print head life, provide better ink efficiency, and maintain print quality, keep your machine connected to a power source at all times.

MFC-J3930DW

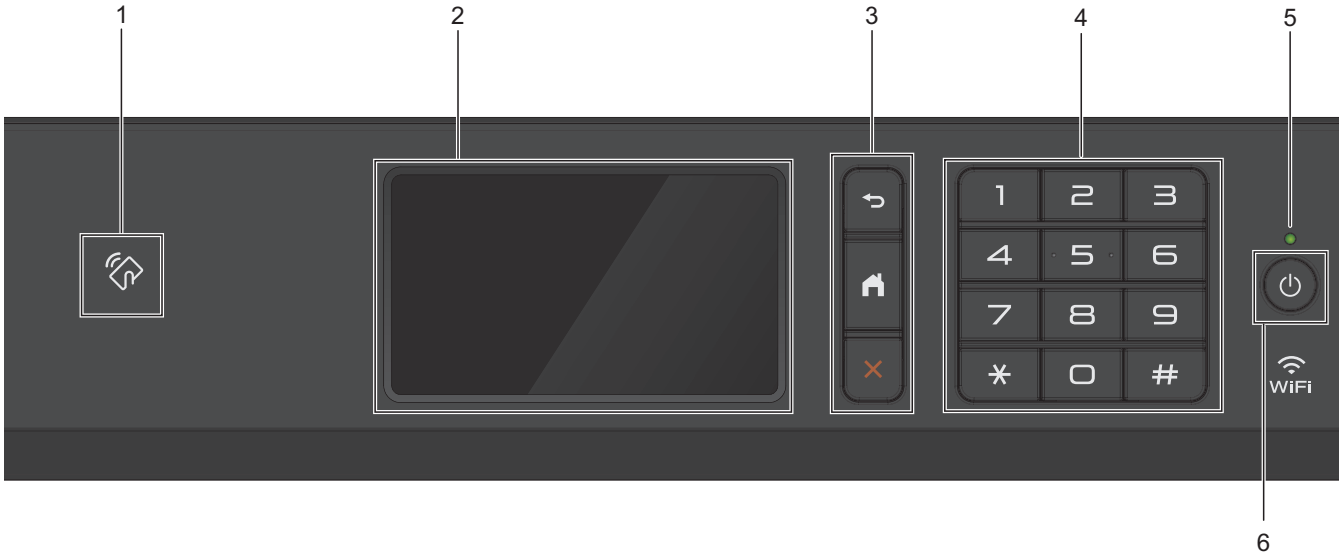

1. **NFC (Near Field Communication) symbol**

   You can use card authentication by touching the IC card to the NFC symbol on the control panel.

   If your Android™ device supports the NFC feature, you can print from your device or scan documents to your device in the same way.

2. **Touchscreen Liquid Crystal Display (LCD)**

   Access menus and options by pressing them on the touchscreen.

   Adjust the angle of the control panel by lifting it.

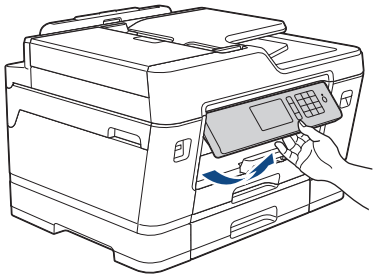

3. **Menu buttons**

   (Back)

   Press to go back to the previous menu.

   (Home)

   Press to return to the Home screen.

   (Cancel)

   Press to cancel an operation.

4. **Dial Pad**

   Press the numbers to dial telephone or fax numbers and to enter the number of copies.

5. **LED Power Indicator**

   The LED lights up depending on the machine's power status.

   When the machine is in Sleep Mode, the LED blinks.

6. **Power On/Off**

   Press to turn the machine on.

   Press and hold down to turn the machine off. The touchscreen will display `[Shutting Down]` and will stay on for a few seconds before turning itself off. If you have connected an external telephone or TAD, it is always available.

   If you turn the machine off using , it will still clean the print head periodically to maintain print quality. To prolong print head life, provide better ink efficiency, and maintain print quality, keep your machine connected to a power source at all times.

Related Information

- Introduction to Your Brother Machine
- Near-Field Communication (NFC)

Touchscreen LCD Overview

MFC-J3530DW

There are three Home screens that you can access by pressing ◀ or ▶.

From the Home screens, you can access Shortcuts, Wi-Fi setup, Settings and Ink levels screens.

Home Screen 1

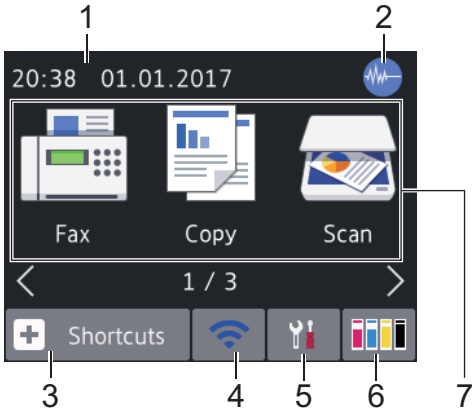

This screen shows the machine's status when the machine is idle. This Home screen is also called the Ready Mode screen. When displayed, it indicates that your machine is ready for the next command.

Home Screen 1 provides access to `[Fax]`, `[Copy]` and `[Scan]` operations.

Home Screen 2

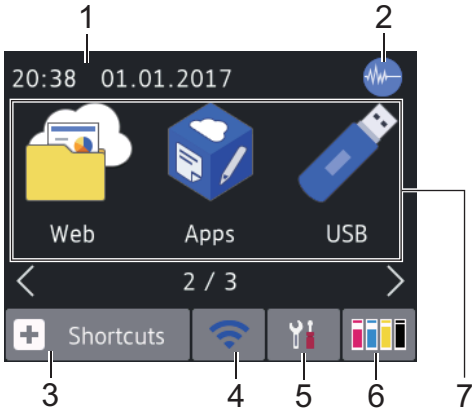

Home Screen 2 provides access to additional features, such as `[Web]`, `[Apps]` and `[USB]` operations.

Home Screen 3

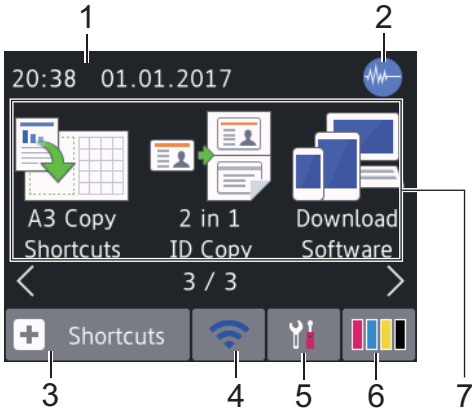

Home Screen 3 provides access to additional features, such as `[A3 Copy Shortcuts]`, `[2 in 1 ID Copy]` and `[Download Software]` operations.

1. **Date & Time**

   Displays the date and time set on the machine.

2. **Quiet Mode**

   This icon appears when the `[Quiet Mode]` setting is set to `[On]`.

   The Quiet Mode setting can reduce printing noise. When Quiet Mode is turned on, the print speed becomes slower.

3. **[Shortcuts]**

   Create Shortcuts for frequently-used operations, such as sending a fax, copying, scanning, Web Connect and Apps services.

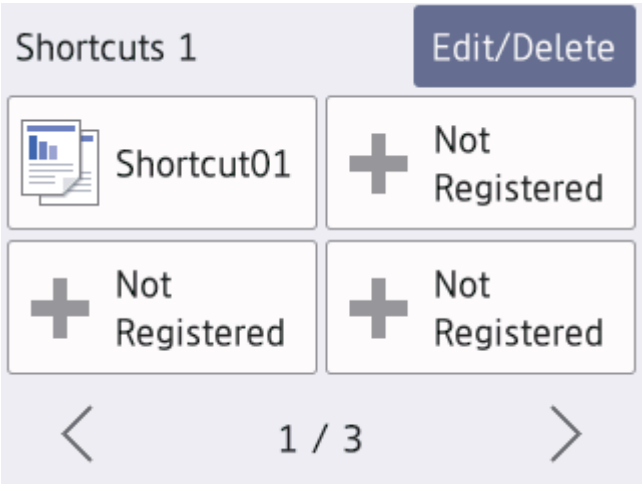

   - There are three Shortcuts screens. You can program four shortcuts on each screen.
   - To display the other Shortcuts screens, press ◀ or ▶.

4. **Wireless Status**

   Each icon in the following table shows the wireless network status:

WiFi	Your machine is not connected to the wireless access point. Press this button to configure wireless settings. For more detailed information, see the *Quick Setup Guide*.
	Wireless network is connected. A three-level indicator in each of the Home screens displays the current wireless signal strength.
	The wireless access point cannot be detected.
	The wireless setting is disabled.

   You can configure wireless settings by pressing the Wireless Status button.

5. **[Settings]**

   Press to access the `[Settings]` menu.

6. **[Ink]**

   Displays the available ink volume. Press to access the `[Ink]` menu.

   When an ink cartridge is near the end of its life or having a problem, an error icon is displayed on the ink colour.

7. **Modes:**

   - **[Fax]**

     Press to access Fax mode.

- **[Copy]**

  Press to access Copy mode.

- **[Scan]**

  Press to access Scan mode.

- **[Web]**

  Press to connect the Brother machine to an Internet service.

- **[Apps]**

  Press to connect the Brother machine to the Brother Apps service.

- **[USB]**

  Press to access the [USB] menu.

- **[A3 Copy Shortcuts]**

  Press to copy to A3 or Ledger size paper using this preset menu.

- **[2 in 1 ID Copy]**

  Press to copy both sides of your identification card onto one page, keeping the original card size.

- **[Download Software]**

  Press to display information about downloading and installing software for mobile devices and computers.

8. **[Stored Faxes:]**

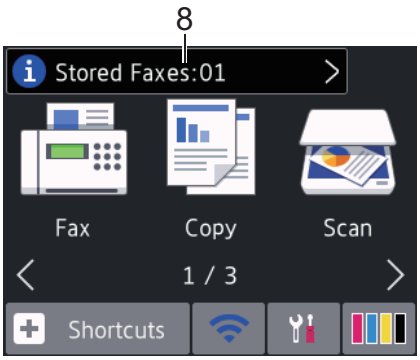

[Stored Faxes] displays how many received faxes are in the machine's memory.

Press to print the faxes.

9. **[New Faxes:]**

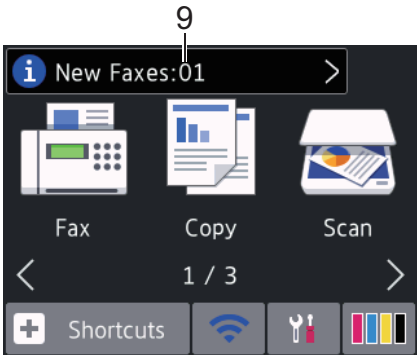

When [Fax Preview] is set to [On], [New Faxes] displays how many new faxes you have received and stored in the memory.

Press to view the faxes on the touchscreen.

If you receive a fax containing multiple paper sizes (for example, a page of A4 data and a page of A3 data), the machine may create and store a file for each paper size, so the touchscreen may show that more than one fax job has been received.

10. **Warning icon**

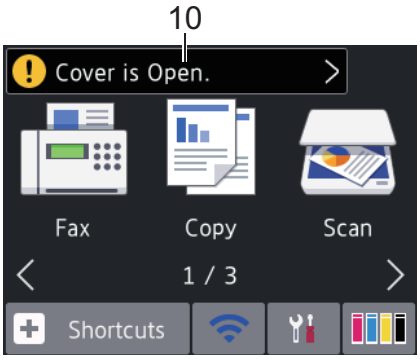

The warning icon appears when there is an error or maintenance message; press to view the details, and then press to return to Ready mode.

- This product adopts the font of ARPHIC TECHNOLOGY CO.,LTD.

MFC-J3930DW

There are three Home screens that you can access by swiping left or right or pressing ◀ or ▶.

From the Home screens, you can access Shortcuts, Wi-Fi setup, Settings and Ink levels screens.

Home Screen 1

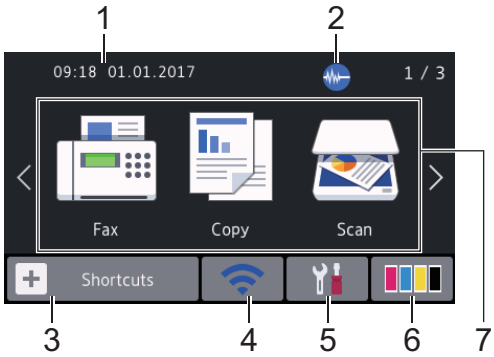

This screen shows the machine's status when the machine is idle. This Home screen is also called the Ready Mode screen. When displayed, it indicates that your machine is ready for the next command.

You can change the Ready Mode screen.

Home Screen 1 provides access to [Fax], [Copy] and [Scan] operations.

Home Screen 2

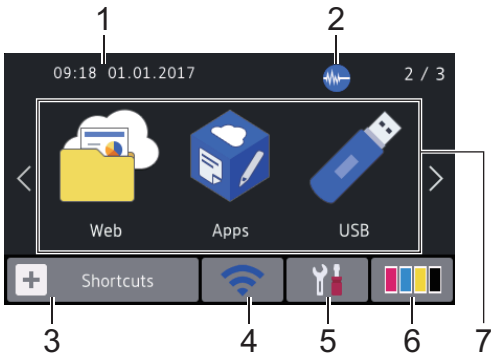

Home Screen 2 provides access to additional features, such as [Web], [Apps] and [USB] operations.

Home Screen 3

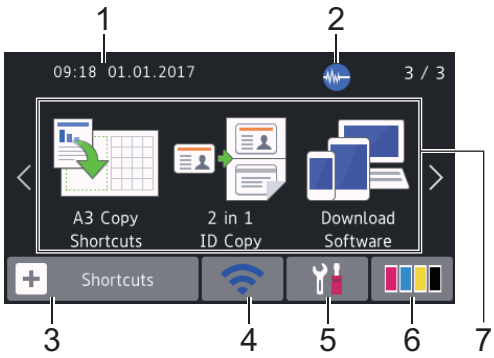

Home Screen 3 provides access to additional features, such as [A3 Copy Shortcuts], [2 in 1 ID Copy] and [Download Software] operations.

1. **Date & Time**

   Displays the date and time set on the machine.

2. **Quiet Mode**

   This icon appears when the [Quiet Mode] setting is set to [On].

   The Quiet Mode setting can reduce printing noise. When Quiet Mode is turned on, the print speed becomes slower.

3. **[Shortcuts]**

   Create Shortcuts for frequently-used operations, such as sending a fax, copying, scanning, Web Connect and Apps services.

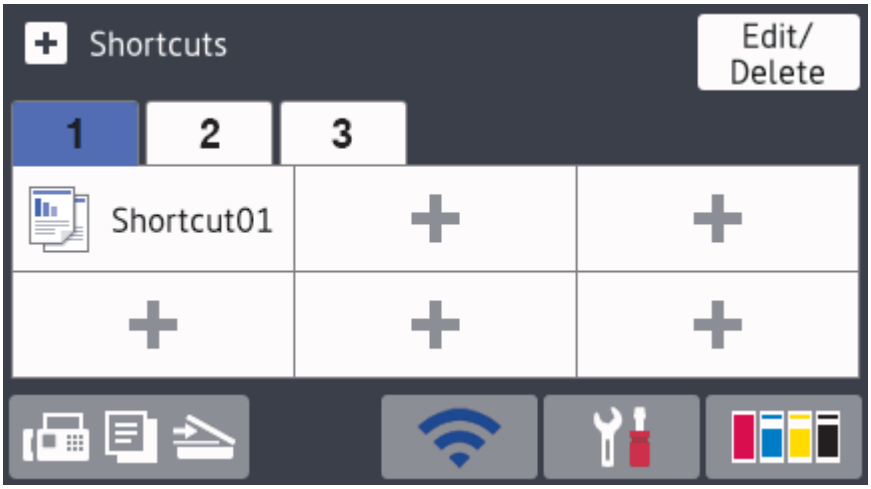

- Three Shortcuts tabs are available with six Shortcuts on each tab.
- Press , displayed at the bottom of the screen to access the Home Screens.

4. **Wireless Status**

   Each icon in the following table shows the wireless network status:

WIFI	Your machine is not connected to the wireless access point. Press this button to configure wireless settings. For more detailed information, see the *Quick Setup Guide*.
	Wireless network is connected. A three-level indicator in each of the Home screens displays the current wireless signal strength.
	The wireless access point cannot be detected.
	The wireless setting is disabled.

You can configure wireless settings by pressing the Wireless Status button.

5. **[Settings]**

   Press to access the `[Settings]` menu.

6. **[Ink]**

   Displays the available ink volume. Press to access the `[Ink]` menu.

   When an ink cartridge is near the end of its life or having a problem, an error icon is displayed on the ink colour.

7. **Modes:**

   - **[Fax]**

     Press to access Fax mode.

   - **[Copy]**

     Press to access Copy mode.

   - **[Scan]**

     Press to access Scan mode.

   - **[Web]**

     Press to connect the Brother machine to an Internet service.

   - **[Apps]**

Press to connect the Brother machine to the Brother Apps service.

- **[USB]**

  Press to access the [USB] menu.

- **[A3 Copy Shortcuts]**

  Press to copy to A3 or Ledger size paper using this preset menu.

- **[2 in 1 ID Copy]**

  Press to copy both sides of your identification card onto one page, keeping the original card size.

- **[Download Software]**

  Press to display information about downloading and installing software for mobile devices and computers.

8. **[Stored Faxes:]**

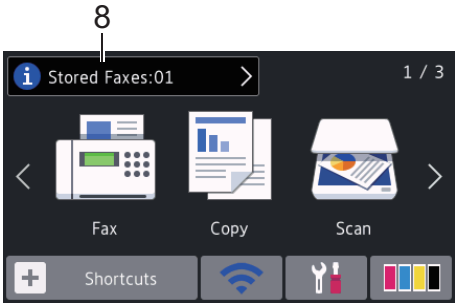

[Stored Faxes] displays how many received faxes are in the machine's memory.

Press to print the faxes.

9. **[New Faxes:]**

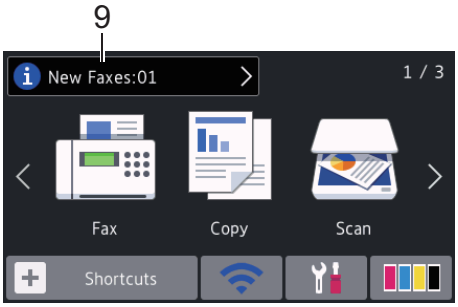

When [Fax Preview] is set to [On], [New Faxes] displays how many new faxes you have received and stored in the memory.

Press to view the faxes on the touchscreen.

If you receive a fax containing multiple paper sizes (for example, a page of A4 data and a page of A3 data), the machine may create and store a file for each paper size, so the touchscreen may show that more than one fax job has been received.

10. **Warning icon**

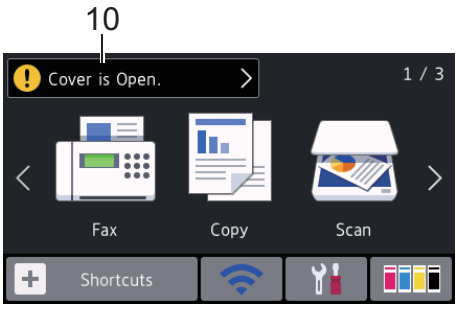

The warning icon appears when there is an error or maintenance message; press to view the details, and then press to return to Ready mode.

- This product adopts the font of ARPHIC TECHNOLOGY CO.,LTD.

Related Information

- Introduction to Your Brother Machine
- New Information from Brother
- Set the Ready Screen
- Reduce Printing Noise
- Check the Ink Volume
- Settings Screen Overview
- Use the A3 Copy Shortcuts
- Error and Maintenance Messages
- Copy an ID Card

New Information from Brother

>> MFC-J3530DW
>> MFC-J3930DW

MFC-J3530DW

New information from Brother appears in the information bar when the notification settings such as [Message from Brother] and [Firmware Auto Check] are set to [On].

Press to view the details.

Internet connection is needed, and data rates may apply.

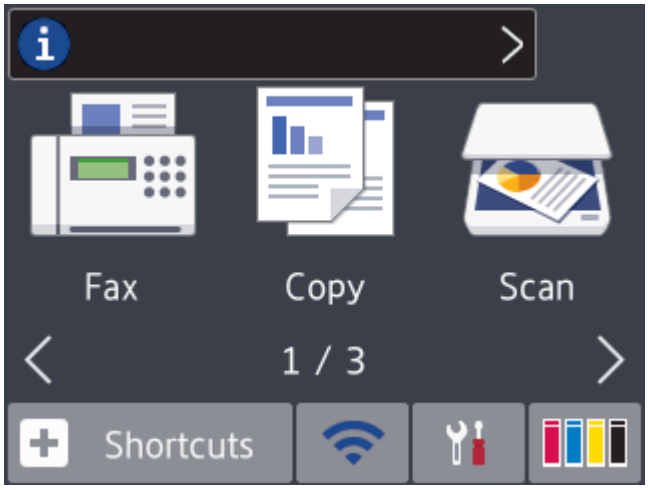

MFC-J3930DW

New information from Brother appears in the information bar when the notification settings such as [Message from Brother] and [Firmware Auto Check] are set to [On].

Press to view the details.

Internet connection is needed, and data rates may apply.

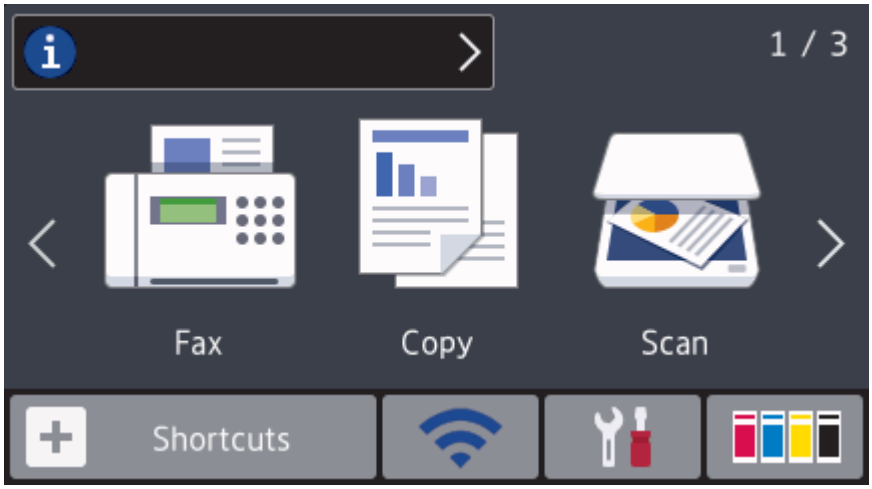

Related Information

- Touchscreen LCD Overview

Settings Screen Overview

MFC-J3530DW

The touchscreen shows the machine's status when you press [Settings].

Use the Settings menu to access all of your Brother machine's settings.

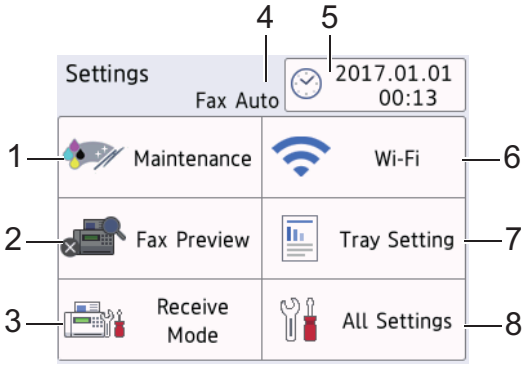

1. **[Maintenance]**

   Press to access the following menus:

   - [Improve Print Quality]
   - [Print Head Cleaning]
   - [Remove Paper Scraps]
   - [Ink Volume]
   - [Ink Cartridge Model]
   - [Print Setting Options]

2. **[Fax Preview]**

   Displays the Fax Preview setting.

   Press to access the [Fax Preview] menu.

3. **[Receive Mode]**

   Press to access the [Receive Mode] menu.

4. **Receive Mode**

   Displays the current Receive Mode.

5. **[Date & Time]**

   Displays the date and time.

   Press to access the [Date & Time] menu.

6. **[Wi-Fi]**

   Press to set up a wireless network connection.

   If you are using a wireless connection, a three-level indicator on the screen displays the current wireless signal strength.

7. **[Tray Setting]**

   Press to access the [Tray Setting] menu.

   Use options in the Tray setting menu to change the paper size and type.

8. **[All Settings]**

   Press to access a menu of all of your machine's settings.

MFC-J3930DW

The touchscreen shows the machine's status when you press [Settings].

Use the Settings menu to access all of your Brother machine's settings.

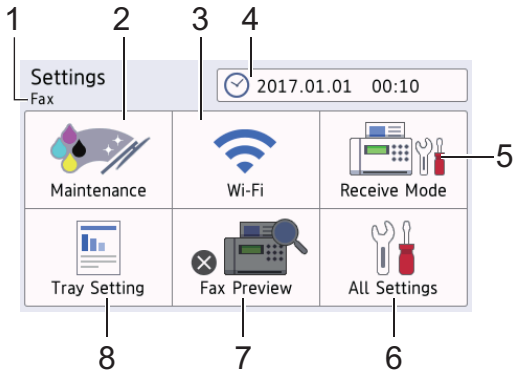

1. **Receive Mode**

   Displays the current Receive Mode.

2. **[Maintenance]**

   Press to access the following menus:

   - [Improve Print Quality]
   - [Print Head Cleaning]
   - [Remove Paper Scraps]
   - [Ink Volume]
   - [Ink Cartridge Model]
   - [Print Setting Options]

3. **[Wi-Fi]**

   Press to set up a wireless network connection.

   If you are using a wireless connection, a three-level indicator on the screen displays the current wireless signal strength.

4. **[Date & Time]**

   Displays the date and time.

   Press to access the [Date & Time] menu.

5. **[Receive Mode]**

   Press to access the [Receive Mode] menu.

6. **[All Settings]**

   Press to access a menu of all of your machine's settings.

7. **[Fax Preview]**

   Displays the Fax Preview setting.

   Press to access the [Fax Preview] menu.

8. **[Tray Setting]**

   Press to access the [Tray Setting] menu.

   Use options in the Tray setting menu to change the paper size and type.

Related Information

- Introduction to Your Brother Machine
- Touchscreen LCD Overview
- Check the Ink Volume

Navigate the Touchscreen

>> MFC-J3530DW
>> MFC-J3930DW

MFC-J3530DW

- Press your finger on the touchscreen to display and access all the settings and features and their available options. Press ◀ ▶ or ▲ ▼ to scroll through them.

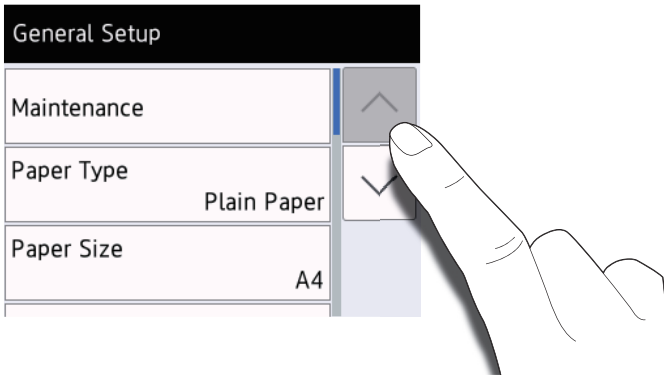

IMPORTANT

DO NOT press the touchscreen with a sharp object such as a pen or stylus. It may damage the machine.

DO NOT touch the touchscreen immediately after plugging in the power cord or turning on the machine. Doing this may cause an error.

MFC-J3930DW

- Press your finger on the touchscreen to display and access all the settings and features and their available options. Swipe left, right or up, down or press ◀ ▶ or ▲ ▼ to scroll through them.

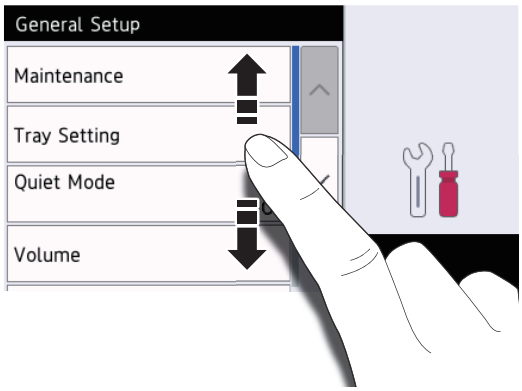

IMPORTANT

DO NOT press the touchscreen with a sharp object such as a pen or stylus. It may damage the machine.

DO NOT touch the touchscreen immediately after plugging in the power cord or turning on the machine. Doing this may cause an error.

Related Information

- Introduction to Your Brother Machine

Set the Ready Screen

Related Models: MFC-J3930DW

You can change the Ready screen to either the [Screen 1] , [Screen 2], [Screen 3], [Shortcuts 1], [Shortcuts 2] or [Shortcuts 3] screen.

When the machine is idle or you press , the machine will go back to the screen that you have set.

1. Press [Settings] > [All Settings] > [General Setup] > [Screen Settings] > [Home Screen].
2. Swipe up or down or press ▲ or ▼ to display the [Screen 1], [Screen 2], [Screen 3], [Shortcuts 1], [Shortcuts 2], or [Shortcuts 3] option, and then press the option you want.
3. Press .

   The machine will go to your new Home screen.

Related Information

- Introduction to Your Brother Machine
- Set the Default Screen of the Copy and Scan Mode
- Touchscreen LCD Overview

Set the Default Screen of the Copy and Scan Mode

>> MFC-J3530DW
>> MFC-J3930DW

MFC-J3530DW

You can change the default screen of the Scan mode.

1. Press [Settings] > [All Settings] > [General Setup] > [Screen Settings] > [Scan Screen].
2. Press ▲ or ▼ to display the scan options, and then press the option you want in the default screen.
3. Press .

MFC-J3930DW

You can change the default screen of the Copy and Scan mode.

1. Do one of the following:
   - when changing the copy screen:

     Press [Settings] > [All Settings] > [General Setup] > [Screen Settings] > [Copy Screen].
   - when changing the scan screen:

     Press [Settings] > [All Settings] > [General Setup] > [Screen Settings] > [Scan Screen].
2. Swipe up or down or press ▲ or ▼ to display the copy or scan options, and then press the option you want in the default screen.
3. Press .

Related Information

- Set the Ready Screen

Access Brother Utilities (Windows)

Brother Utilities is an application launcher that offers convenient access to all Brother applications installed on your computer.

1. Do one of the following:
   - Windows Vista and Windows 7

     Click **(Start)** > **All Programs** > **Brother** > **Brother Utilities**.
   - Windows 8

     Tap or click (**Brother Utilities**) either on the **Start** screen or the desktop.
   - Windows 8.1

     Move your mouse to the lower left corner of the **Start** screen and click (if using a touch-based device, swipe up from the bottom of the **Start** screen to bring up the **Apps** screen).

     When the **Apps** screen appears, tap or click (**Brother Utilities**).
   - Windows 10

     Click > **All apps** > **Brother** > **Brother Utilities**.
2. Select your machine.

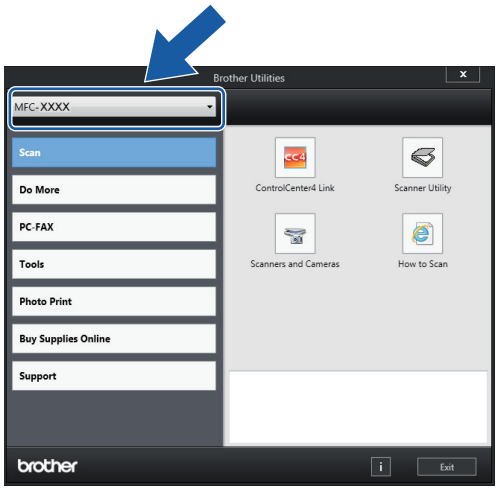

3. Select the operation you want to use.

Related Information

- Introduction to Your Brother Machine
- Uninstall the Brother Software and Drivers (Windows)

Uninstall the Brother Software and Drivers (Windows)

1. Do one of the following:
   - Windows Vista and Windows 7

     Click **(Start)** > **All Programs** > **Brother** > **Brother Utilities**.
   - Windows 8

     Tap or click (**Brother Utilities**) either on the **Start** screen or the desktop.
   - Windows 8.1

     Move your mouse to the lower left corner of the **Start** screen and click (if using a touch-based device, swipe up from the bottom of the **Start** screen to bring up the **Apps** screen).

     When the **Apps** screen appears, tap or click (**Brother Utilities**).
   - Windows 10

     Click > **All apps** > **Brother** > **Brother Utilities**.
2. Click the drop-down list, and then select your model name (if not already selected). Click **Tools** in the left navigation bar, and then click **Uninstall**.

   Follow the instructions in the dialog box to uninstall the software and drivers.

Related Information

- Access Brother Utilities (Windows)

Paper Handling

- Load Paper
- Load Documents

Load Paper

- Load Paper in Paper Tray #1 / Paper Tray #2
- Load Paper in the Multi-purpose Tray (MP Tray)
- Load Paper in the Manual Feed Slot
- Unprintable Area
- Paper Settings
- Acceptable Paper and Other Print Media
- Error and Maintenance Messages
- Paper Handling and Printing Problems

Load Paper in Paper Tray #1 / Paper Tray #2

- Load A4, Letter, or Executive Size Paper in Paper Tray #1 / Paper Tray #2
- Load A3, Ledger, or Legal Size Paper in Paper Tray #1 / Paper Tray #2
- Load Photo Paper in Paper Tray #1
- Load Envelopes in Paper Tray #1

Load A4, Letter, or Executive Size Paper in Paper Tray #1 / Paper Tray #2

- If the [Check Paper] setting is set to [On] and you pull the paper tray out of the machine, a message appears on the LCD asking if you want to change the paper type and paper size. Change the Paper Size and Paper Type settings if needed, following the LCD instructions.
- Load only one size and type of paper in the paper tray at a time.
- When you load a different paper size in the tray, you must change the Paper Size setting in the machine or the paper size setting on your computer.

  Doing this enables the machine to automatically feed paper from the appropriate tray if Auto Tray Select has been set in the machine or printer driver. (MFC-J3930DW)
- You can use only plain paper in Tray #2. (MFC-J3930DW)

These instructions describe how to load paper in Tray #1. The steps for Tray #2 are very similar. (MFC-J3930DW)

1. If the paper support flap (1) is open, close it, and then close the paper support (2).

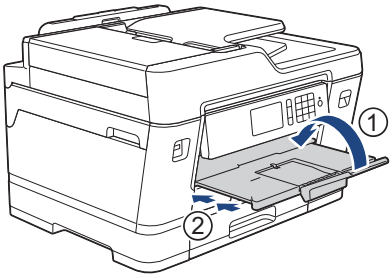

2. Pull the paper tray completely out of the machine as shown by the arrow.

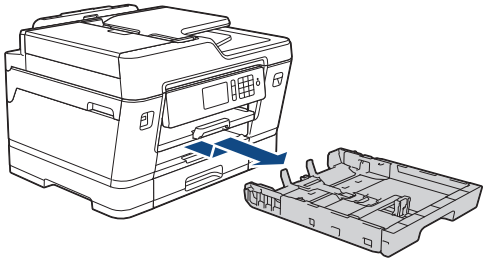

(MFC-J3930DW)

When you load paper in Tray #2, remove the tray top cover (1).

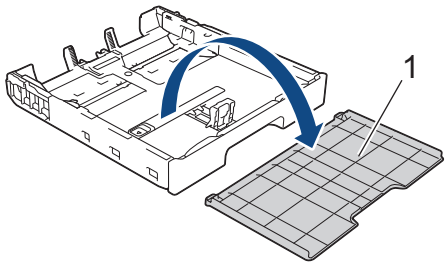

3. Gently press and slide the paper width guides (1) and then the paper length guide (2) to fit the paper size.

   Make sure the triangular mark (3) on the paper width guide (1) and paper length guide (2) line up with the marks for the paper you are using.

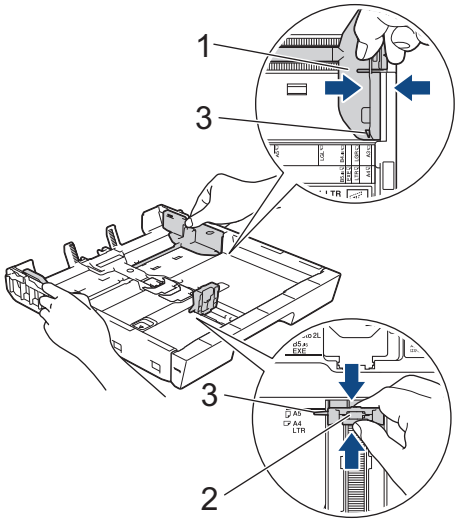

If you load Executive or B5 (JIS) size paper, lift up the stopper (4).

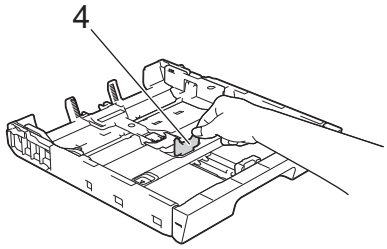

4. Fan the stack of paper well to avoid paper jams and misfeeds.

Always make sure the paper is not curled or wrinkled.

5. Gently load paper in the paper tray with the printing surface *face down*.

Landscape orientation

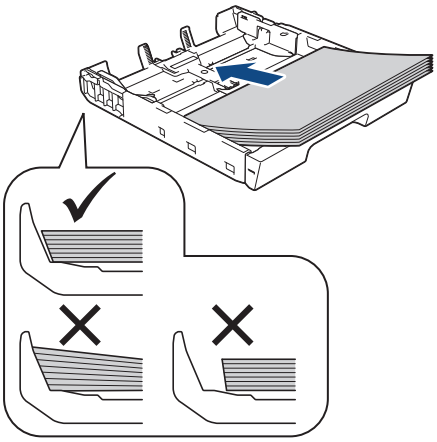

IMPORTANT

Be careful not to push the paper in too far; it may lift at the back of the tray and cause paper feed problems.

To add paper before the tray is empty, remove the paper from the tray and combine it with the paper you are adding. Always fan the stack of paper well to prevent the machine from feeding multiple pages.

6. Make sure the paper length guide (1) touches the edges of the paper.

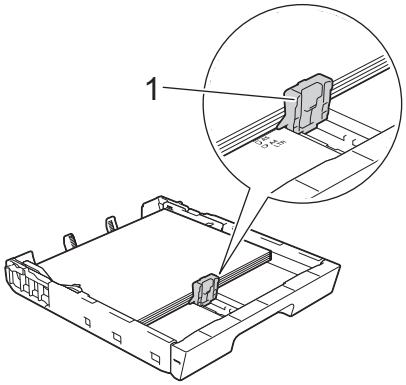

7. Gently adjust the paper width guides (1) to fit the paper.

   Make sure the paper guides touch the edges of the paper.

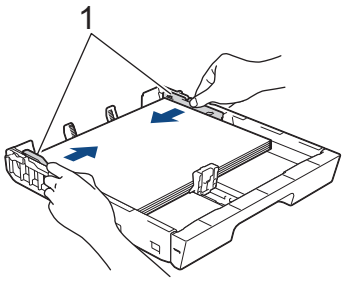

8. Make sure the paper is flat in the tray and below the maximum paper mark (1).

   Overfilling the paper tray may cause paper jams.

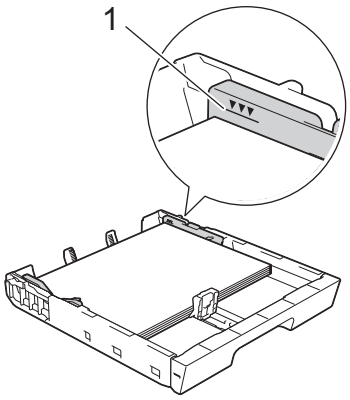

(MFC-J3930DW)

When you load paper in Tray #2, replace the tray top cover.

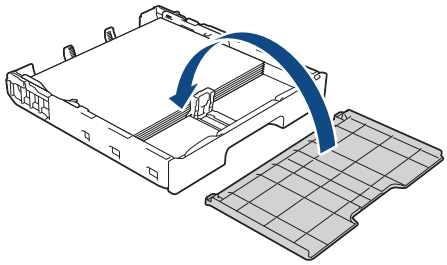

9. Slowly push the paper tray completely into the machine.

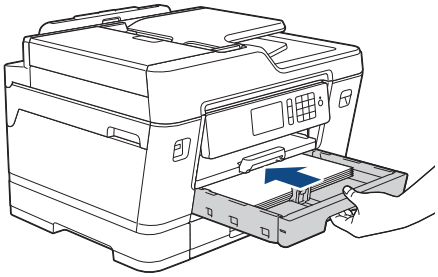

IMPORTANT

DO NOT push the paper tray into the machine forcefully or quickly. Doing this may cause paper jams or paper feed problems.

10. Pull out the paper support until it locks into place.

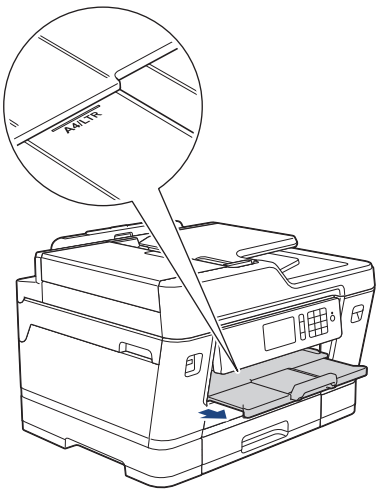

11. Change the paper size setting in the machine's menu, if needed.

Related Information

- Load Paper in Paper Tray #1 / Paper Tray #2
- Change the Check Paper Size Setting
- Choose the Right Print Media
- Change the Paper Size and Paper Type

Load A3, Ledger, or Legal Size Paper in Paper Tray #1 / Paper Tray #2

- If the [Check Paper] setting is set to [On] and you pull the paper tray out of the machine, a message appears on the LCD asking if you want to change the paper type and paper size. Change the Paper Size and Paper Type settings if needed, following the LCD instructions.
- Load only one size and type of paper in the paper tray at a time.
- When you load a different paper size in the tray, you must change the Paper Size setting in the machine or the paper size setting on your computer.

  Doing this enables the machine to automatically feed paper from the appropriate tray if Auto Tray Select has been set in the machine or printer driver. (MFC-J3930DW)
- You can use only plain paper in Tray #2. (MFC-J3930DW)

These instructions describe how to load paper in Tray #1. The steps for Tray #2 are very similar. (MFC-J3930DW)

1. If the paper support flap (1) is open, close it, and then close the paper support (2).

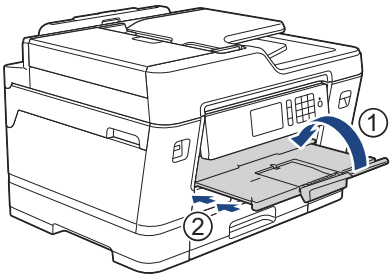

2. Pull the paper tray completely out of the machine as shown by the arrow.

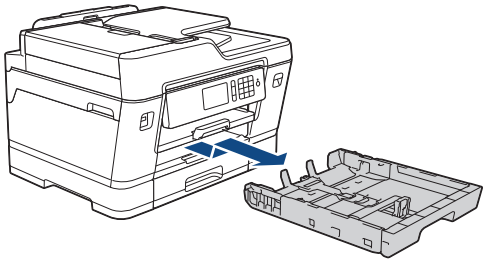

(MFC-J3930DW)

When you load paper in Tray #2, remove the tray top cover (1).

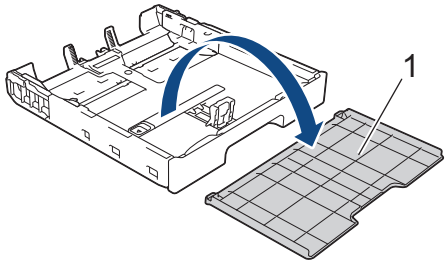

3. Rest the tray on a flat surface.

   Push the green slider to the left and then extend the tray until it locks into place.

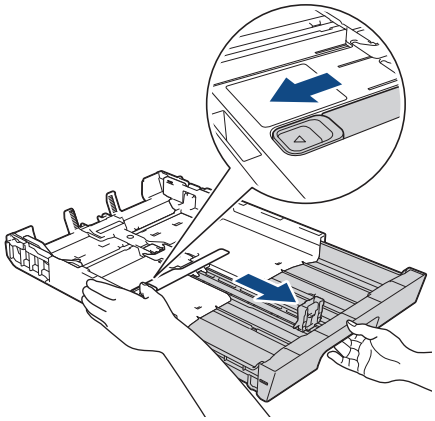

4. Gently press and slide the paper width guides (1) and then the paper length guide (2) to fit the paper size.

   Make sure the triangular mark (3) on the paper width guide (1) and paper length guide (2) line up with the marks for the paper you are using.

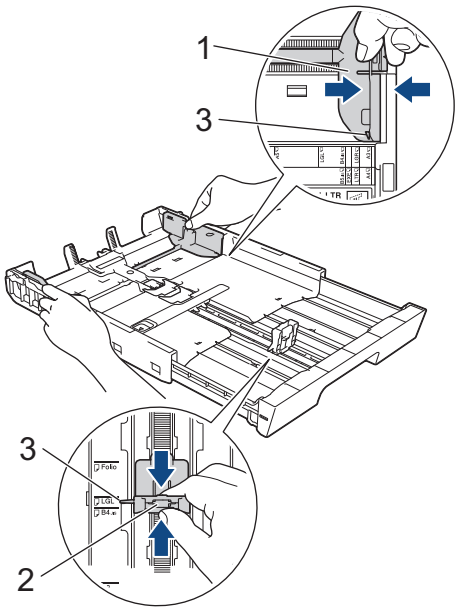

5. Fan the stack of paper well to avoid paper jams and misfeeds.

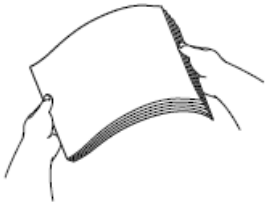

Always make sure the paper is not curled or wrinkled.

6. Gently load paper in the paper tray with the printing surface *face down*.

Portrait orientation

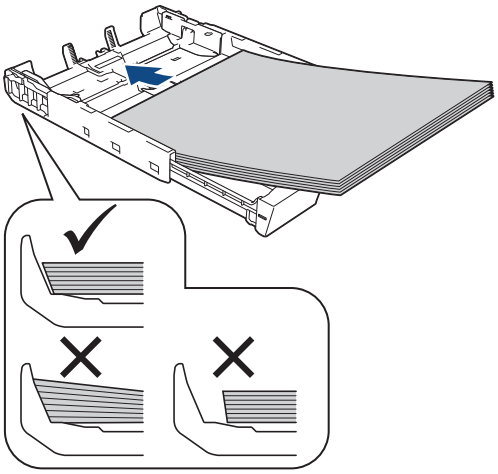

IMPORTANT

Be careful not to push the paper in too far; it may lift at the back of the tray and cause paper feed problems.

To add paper before the tray is empty, remove the paper from the tray and combine it with the paper you are adding. Always fan the stack of paper well to prevent the machine from feeding multiple pages.

7. Make sure the paper length guide (1) touches the edges of the paper.

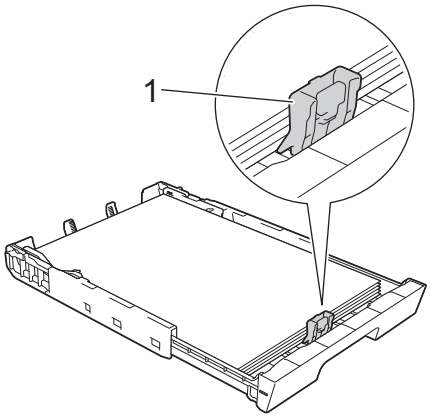

8. Gently adjust the paper width guides (1) to fit the paper.

   Make sure the paper guides touch the edges of the paper.

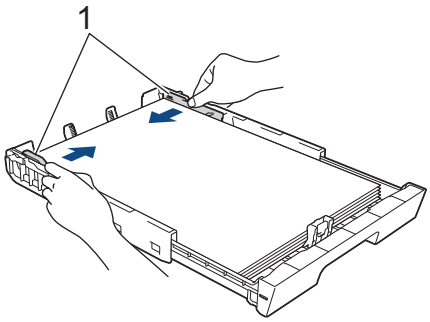

9. Make sure the paper is flat in the tray and below the maximum paper mark (1).

   Overfilling the paper tray may cause paper jams.

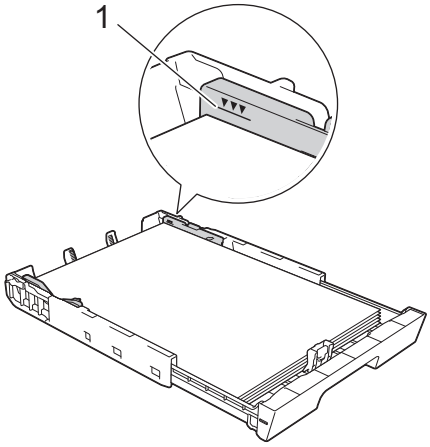

(MFC-J3930DW)

When you load paper in Tray #2, replace the tray top cover.

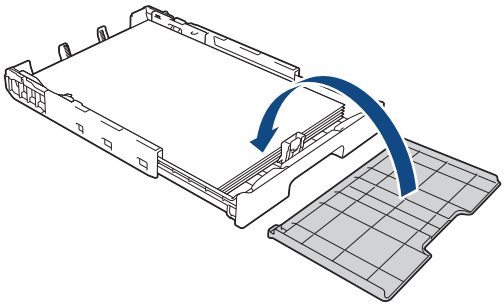

10. Slowly push the paper tray completely into the machine.

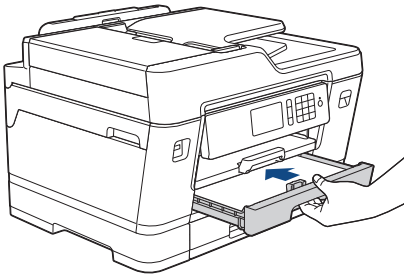

IMPORTANT

DO NOT push the paper tray into the machine forcefully or quickly. Doing this may cause paper jams or paper feed problems.

11. Pull out the paper support (1) until it locks into place, and then unfold the paper support flap (2).

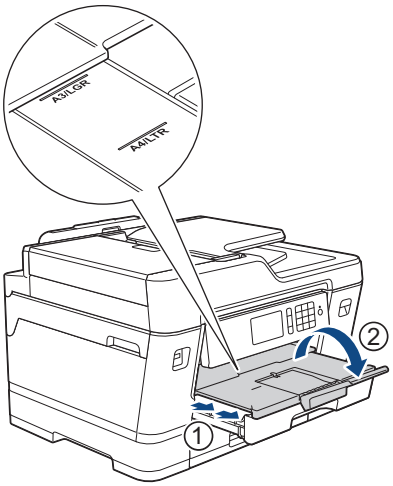

12. Change the paper size setting in the machine's menu, if needed.

CAUTION

Position the machine so the tray will not protrude past the edge of the table or desk where someone may bump into it. The machine could fall and cause injury.

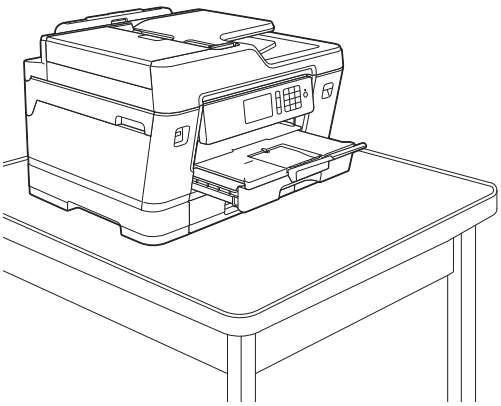

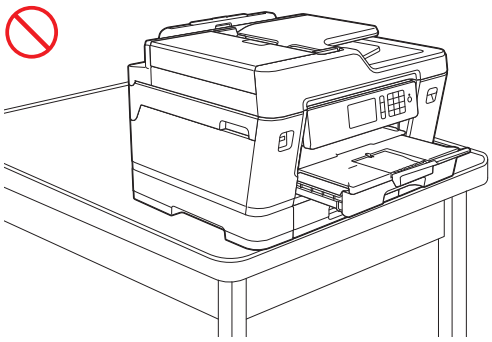

Before you collapse the paper tray, take the paper out of the tray.

Rest the tray on a flat surface.

Push the green slider to the left and then push in the front of the tray to collapse it until it locks into place. Put the paper in the tray.

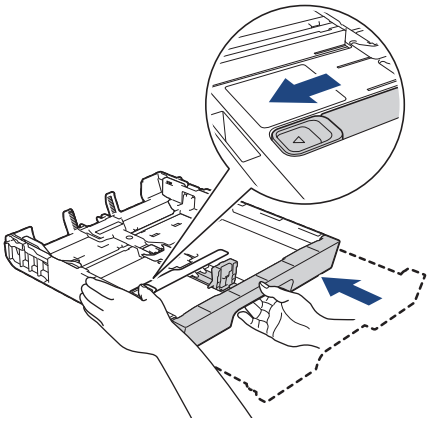

Related Information

- Load Paper in Paper Tray #1 / Paper Tray #2

Load Photo Paper in Paper Tray #1

- If the [Check Paper] setting is set to [On] and you pull the paper tray out of the machine, a message appears on the LCD asking if you want to change the paper type and paper size. Change the Paper Size and Paper Type settings if needed, following the LCD instructions.
- Load only one size and type of paper in the paper tray at a time.
- When you load a different paper size in the tray, you must change the Paper Size setting in the machine or the paper size setting on your computer.

  Doing this enables the machine to automatically feed paper from the appropriate tray if Auto Tray Select has been set in the machine or printer driver. (MFC-J3930DW)

1. If the paper support flap (1) is open, close it, and then close the paper support (2).

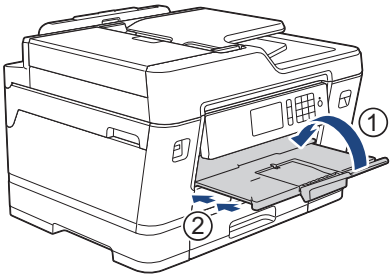

2. Pull the paper tray completely out of the machine as shown by the arrow.

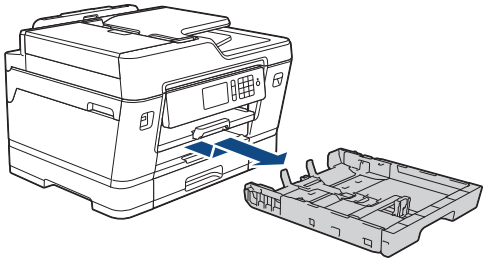

3. Do one of the following:
   - If you load Photo L (9 x 13 cm) in the paper tray, lift up the Photo L stopper (1).
   - If you load Photo (10 x 15 cm) in the paper tray, lift up the Photo stopper (2).
   - If you load Photo 2L (13 x 18 cm) in the paper tray, lift up the Photo 2L stopper (3).

   Gently press and slide the paper width guides (4) to fit the paper size.

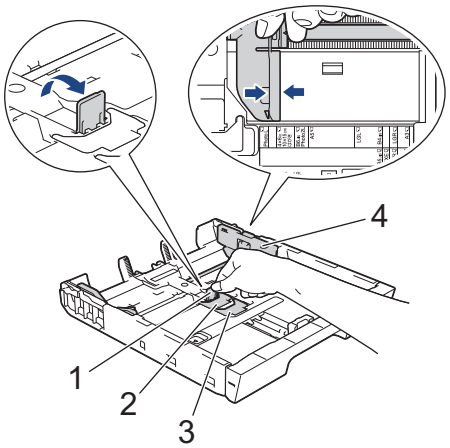

4. Load up to 20 sheets of photo paper in the paper tray with the printing surface *face down*.

   Loading more than 20 sheets of photo paper may cause paper jams.

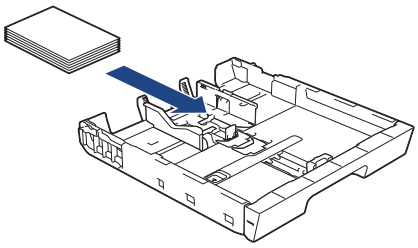

5. Gently adjust the paper width guides (1) to fit the paper.
   Make sure the paper guides touch the edges of the paper and the paper is flat in the tray.

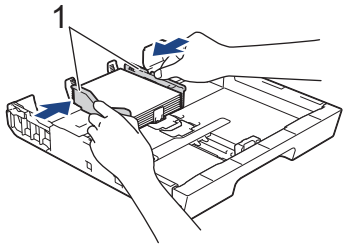

6. Slowly push the paper tray completely into the machine.

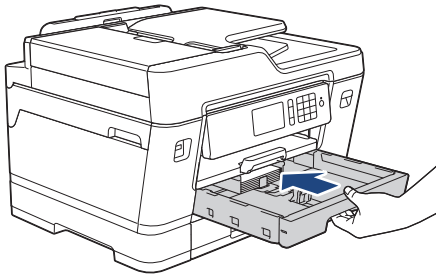

IMPORTANT

DO NOT push the paper tray into the machine forcefully or quickly. Doing this may cause paper jams or paper feed problems.

7. Pull out the paper support until it locks into place.

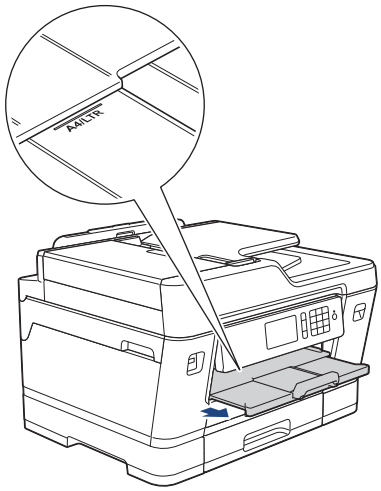

8. Change the paper size setting in the machine's menu, if needed.

Related Information

- Load Paper in Paper Tray #1 / Paper Tray #2
- Change the Check Paper Size Setting
- Choose the Right Print Media
- Change the Paper Size and Paper Type

Load Envelopes in Paper Tray #1

- If the `[Check Paper]` setting is set to `[On]` and you pull the paper tray out of the machine, a message appears on the LCD asking if you want to change the paper type and paper size. Change the Paper Size and Paper Type settings if needed, following the LCD instructions.
- Load only one size and type of paper in the paper tray at a time.
- When you load a different paper size in the tray, you must change the Paper Size setting in the machine or the paper size setting on your computer.

  Doing this enables the machine to automatically feed paper from the appropriate tray if Auto Tray Select has been set in the machine or printer driver. (MFC-J3930DW)
- Before loading envelopes in the tray, press the corners and sides of the envelopes to make them as flat as possible.

  See *Related Information*: *About Envelopes*.

1. If the paper support flap (1) is open, close it, and then close the paper support (2).

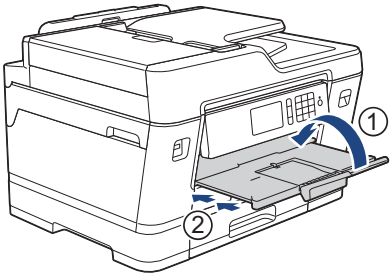

2. Pull the paper tray completely out of the machine as shown by the arrow.

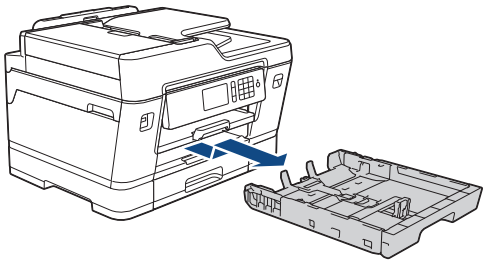

3. Load up to 10 envelopes in the paper tray with the printing surface *face down*. Loading more than 10 envelopes may cause paper jams.

   If the envelope flaps are on the long edge, load the envelopes with the flap on the left, as shown in the illustration. Gently press and slide the paper width guides (1) and paper length guide (2) to fit the size of the envelopes.

   Make sure the envelopes are flat in the tray.

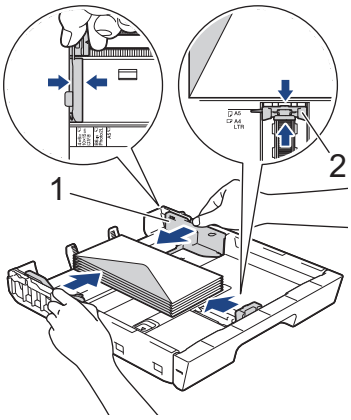

IMPORTANT

If envelopes are "double-feeding," load one envelope in the paper tray at a time.

4. Slowly push the paper tray completely into the machine.

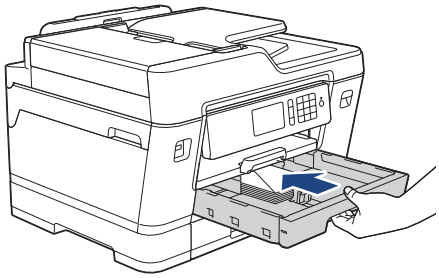

IMPORTANT

DO NOT push the paper tray into the machine forcefully or quickly. Doing this may cause paper jams or paper feed problems.

5. Pull out the paper support (1) until it locks into place, and then unfold the paper support flap (2).

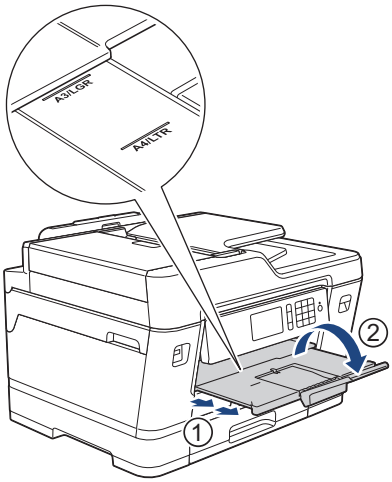

6. Change the paper size setting in the machine's menu, if needed.

Related Information

- Load Paper in Paper Tray #1 / Paper Tray #2
- About Envelopes
- Change the Check Paper Size Setting
- Choose the Right Print Media
- Change the Paper Size and Paper Type

Load Paper in the Multi-purpose Tray (MP Tray)

Related Models: MFC-J3930DW

Use the MP Tray for special print media, such as photo paper or envelopes.

- If the `[Check Paper]` setting is set to `[On]` and you set the paper in MP tray, a message appears on the LCD asking if you want to change the paper type and paper size. Change the Paper Size and Paper Type settings if needed, following the LCD instructions.
- Load only one size and type of paper in the paper tray at a time.
- When you load a different paper size in the tray, you must change the Paper Size setting in the machine or the paper size setting on your computer.

  Doing this enables the machine to automatically feed paper from the appropriate tray if Auto Tray Select has been set in the machine or printer driver.

1. Open the MP tray.

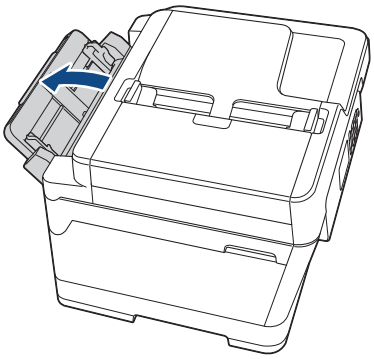

When you want to load paper larger than A4 or Letter size paper, pull up the paper tray using both hands until it locks into place.

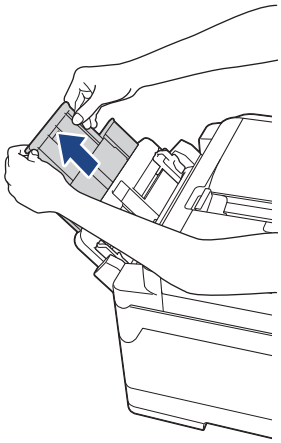

2. Gently press and slide the MP tray paper guides to match the width of the paper you are using.

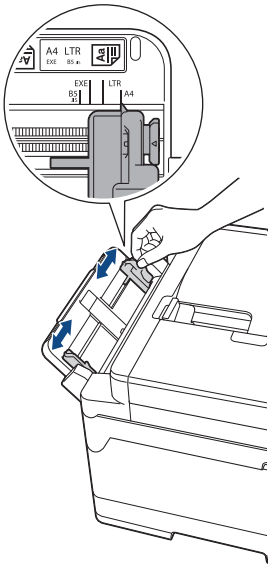

3. Fan the stack of paper well to avoid paper jams and misfeeds.

Always make sure the paper is not curled or wrinkled.

4. Gently load the paper in the MP tray with the printing surface *face up*.
   - Using A4, Letter, Executive, or B5 (JIS)

Landscape orientation

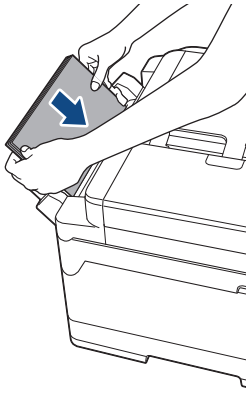

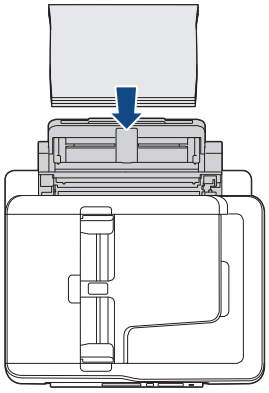

   - Using A3, Ledger, B4 (JIS), Legal, Folio, Mexico Legal, India Legal, 16K (195 x 270 mm), A5, A6, envelopes, Photo, Photo L, Photo 2L, B6 (JIS), or Index Card

Portrait orientation

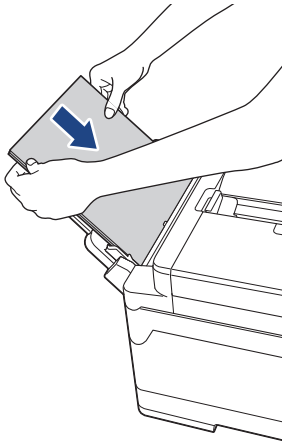

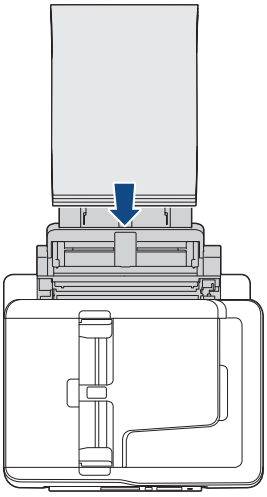

When using envelopes, load the envelopes with the printing surface *face up* and the flap on the left as shown in the illustration.

See *Related Information*: *About Envelopes*.

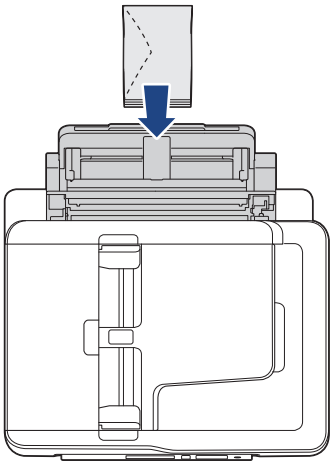

If you are having difficulty loading paper in the MP tray, push the release lever (1) towards the back of the machine, and then load the paper.

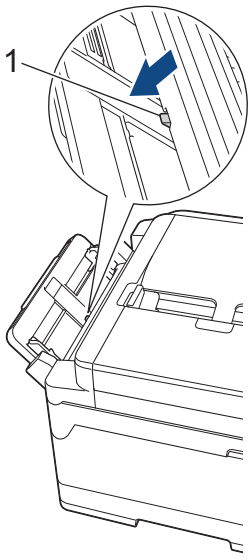

5. Using both hands, gently adjust the MP tray paper guides to fit the paper.

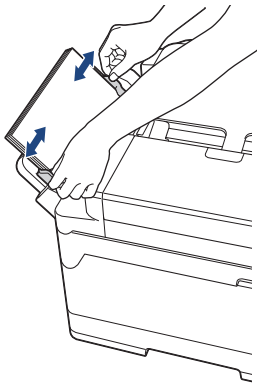

- DO NOT press the paper guides too tightly against the paper. Doing this may cause the paper to fold and jam.
- Place the paper in the centre of the MP tray between the paper guides. If the paper is not centred, pull it out and insert it again at the centre position.

6. Do one of the following:
   - When using A4 or Letter size, or smaller size paper

     Pull out the paper support until it locks into place.

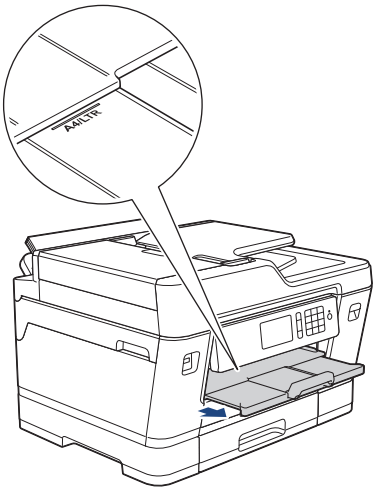

   - When using paper larger than A4 or Letter size, or envelopes

     Pull out the paper support (1) until it locks into place, and then unfold the paper support flap (2).

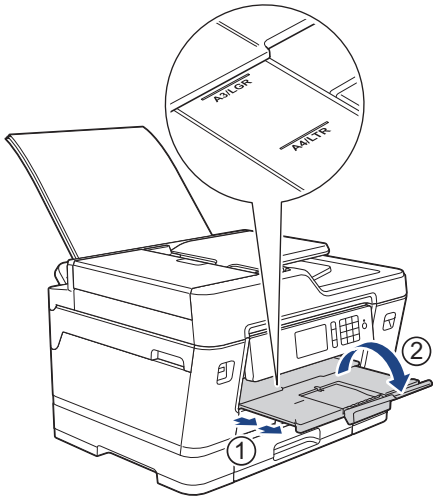

7. Change the paper size setting in the machine's menu, if needed.

Make sure printing has finished before you close the MP tray.

Related Information

- Load Paper
- About Envelopes
- Choose the Right Print Media
- Error and Maintenance Messages

Load Paper in the Manual Feed Slot

Related Models: MFC-J3530DW

Load special print media in this slot, one sheet at a time.

The machine automatically turns on Manual Feed mode when you put paper in the manual feed slot.

1. Open the manual feed slot cover.

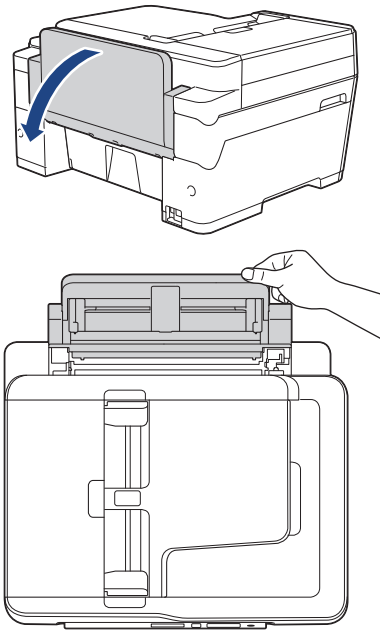

2. Slide the manual feed slot paper guides to fit the width of the paper you are using.

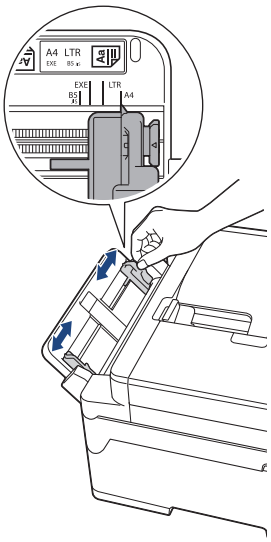

3. Load only one sheet of paper in the manual feed slot with the printing surface *face up*.

   Using both hands, push one sheet of paper into the manual feed slot until the front edge touches the paper feed rollers. Let go of the paper when you feel the machine pull it. The LCD displays `[Manual Feed Slot ready]`.

   Read the instruction displayed on the LCD, and then press `[OK]`.

- Using A4, Letter, Executive, or B5 (JIS)

Landscape orientation

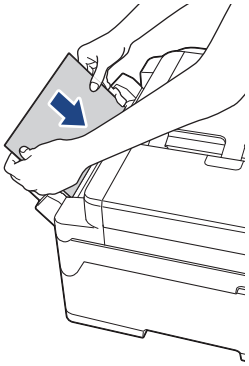

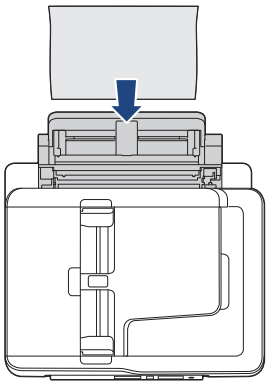

- Using A3, Ledger, B4 (JIS), Legal, Folio, Mexico Legal, India Legal, 16K (195 x 270 mm), A5, A6, envelopes, Photo, Photo L, Photo 2L, B6 (JIS), or Index Card

Portrait orientation

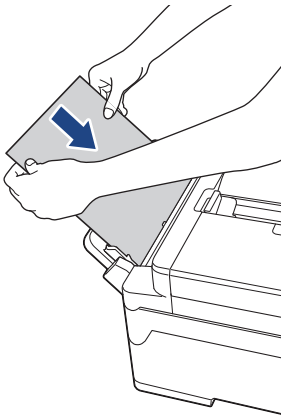

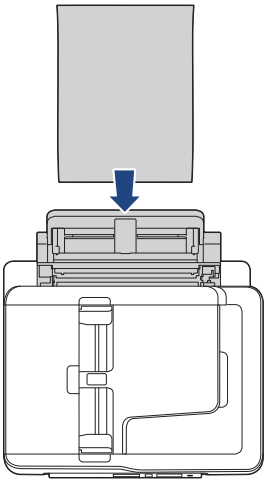

- When using envelopes, load the envelopes with the printing surface *face up* and the flap on the left as shown in the illustration.

  See *Related Information*: *About Envelopes*.

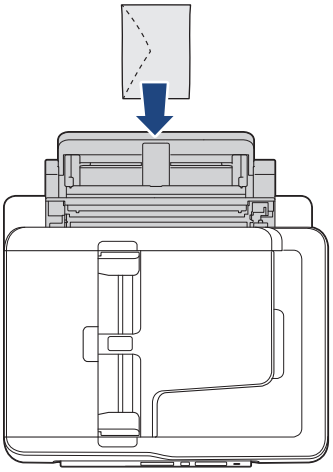

- When loading an envelope, or a sheet of thick paper, push the envelope into the manual feed slot until you feel the paper feed rollers grab it.

IMPORTANT

- DO NOT load more than one sheet of paper in the manual feed slot at any time. Doing this may cause a paper jam. When printing multiple pages, do not feed the next sheet of paper until the touchscreen displays a message instructing you to feed the next sheet.
- DO NOT load paper in the manual feed slot when you are printing from the paper tray. Doing this may cause a paper jam.

4. Do one of the following:
   - When using A4 or Letter size, or smaller size paper

     Pull out the paper support until it locks into place.

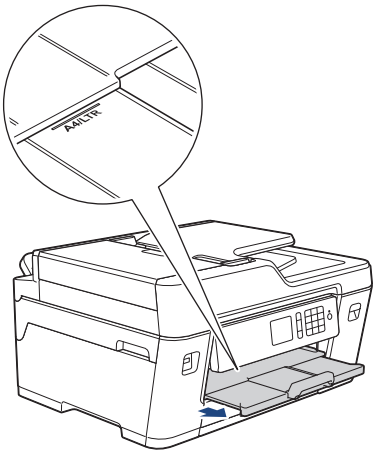

   - When using paper larger than A4 or Letter size, or envelopes

     Pull out the paper support (1) until it locks into place, and then unfold the paper support flap (2).

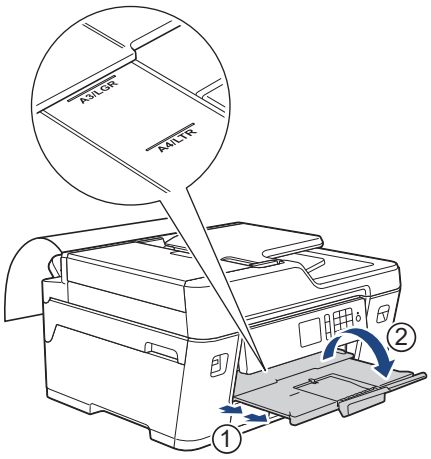

- If the document does not fit on one sheet, the LCD will prompt you to load another sheet of paper. Place another sheet of paper in the manual feed slot, and then press [OK].
- When you feed paper larger than A4 or Letter size into the manual feed slot, the machine holds the printed page after printing so it does not fall. Once printing is complete, pull out the printed page and press [OK].
- Make sure printing has finished before you close the manual feed slot cover.
- The machine will eject paper loaded in the manual feed slot while a test page, fax, or report is being printed.
- The machine will eject paper loaded in the manual feed slot during the machine's cleaning process. Wait until the machine finishes its cleaning, and then load paper in the manual feed slot.

Related Information

- Load Paper

- About Envelopes
- Choose the Right Print Media
- Error and Maintenance Messages

Unprintable Area

The unprintable area depends on the settings in the application you are using. The figures below show the unprintable areas on cut-sheet paper and envelopes. The machine can print in the shaded areas of cut-sheet paper only when the Borderless print feature is available and turned on.

Cut-Sheet Paper

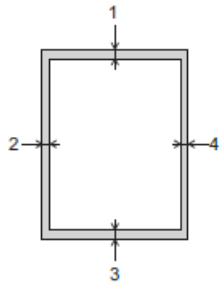

Envelopes

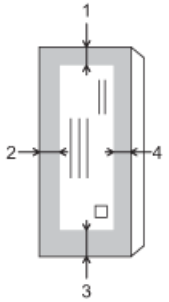

	Top (1)	Left (2)	Bottom (3)	Right (4)
Cut-Sheet	3 mm	3 mm	3 mm	3 mm
Envelopes	12 mm	3 mm	12 mm	3 mm

The Borderless print feature is not available for envelopes and 2-sided printing.

Related Information

- Load Paper
- Paper Handling and Printing Problems

Paper Settings

- Change the Paper Size and Paper Type
- Change the Check Paper Size Setting
- Set a Default Tray Based on Your Task
- Change Paper Tray Priority
- Shrink Page Size of an Oversized Incoming Fax

Change the Paper Size and Paper Type

Set the Paper Size and Paper Type settings for the paper tray.

- To get the best print quality, set the machine for the type of paper you are using.
- When you change the size of the paper you load in the tray, you must change the Paper Size setting on the LCD at the same time.

>> MFC-J3530DW
>> MFC-J3930DW

MFC-J3530DW

1. Press [Settings] > [Tray Setting].
2. Press [Paper Type].
3. Press ▲ or ▼ to display the paper type options, and then press the option you want.
4. Press [Paper Size].
5. Press ▲ or ▼ to display the paper size options, and then press the option you want.
6. Press .

The machine ejects paper with the printed surface face up onto the paper tray at the front of the machine. When you use glossy paper, remove each sheet at once to prevent smudging or paper jams.

MFC-J3930DW

1. Press [Settings] > [Tray Setting].
2. Press the tray option you want.
3. Press [Paper Type].
4. Press the paper type option you want.

Use plain paper only in Tray #2.

5. Press [Paper Size].
6. Swipe up or down or press ▲ or ▼ to display the paper size options, and then press the option you want.
7. Press .

The machine ejects paper with the printed surface face up onto the paper tray at the front of the machine. When you use glossy paper, remove each sheet at once to prevent smudging or paper jams.

Related Information

- Paper Settings
- Load A4, Letter, or Executive Size Paper in Paper Tray #1 / Paper Tray #2
- Load Photo Paper in Paper Tray #1
- Load Envelopes in Paper Tray #1
- Acceptable Paper and Other Print Media
- Error and Maintenance Messages
- Paper Handling and Printing Problems

Change the Check Paper Size Setting

If the Check Paper setting is set to [On] and you pull the paper tray out of the machine or load paper in the MP Tray, the LCD displays a message asking if you want to change the Paper Size and Paper Type settings.

The default setting is [On].

>> MFC-J3530DW
>> MFC-J3930DW

MFC-J3530DW

1. Press [Settings] > [All Settings] > [General Setup].
2. Press ▲ or ▼ to display the [Check Paper] option, and then press it.
3. Press [On] or [Off].
4. Press .

MFC-J3930DW

1. Press [Settings] > [All Settings] > [General Setup] > [Tray Setting] > [Check Paper].
2. Press [On] or [Off].
3. Press .

Related Information

- Paper Settings
- Load A4, Letter, or Executive Size Paper in Paper Tray #1 / Paper Tray #2
- Load Photo Paper in Paper Tray #1
- Load Envelopes in Paper Tray #1
- Error and Maintenance Messages

Set a Default Tray Based on Your Task

Related Models: MFC-J3930DW

Change the default tray the machine uses for each mode.

[Auto Tray Select] sets your machine to feed paper from the most appropriate tray for the paper type and size you have set.

The machine feeds paper from the most appropriate tray using the tray priority order you have set.

Some trays are not available depending on your model.

1. Press [Settings] > [All Settings] > [General Setup] > [Tray Setting].
   - For printing in Copy mode, press [Tray Setting: Copy] > [Tray Use].
   - For printing received faxes, press [Tray Setting: Fax] > [Tray Use].
   - For printing photos, press [Tray Setting: JPEG Print (Media)] > [Tray Use].
2. Press the tray option you want.
3. Press .

Related Information

- Paper Settings

Change Paper Tray Priority

Related Models: MFC-J3930DW

Change the default tray priority the machine uses for each mode.

When [Auto Tray Select] is selected in the tray select settings, the machine will feed paper from the most appropriate tray for the paper type and size according to the tray priority setting.

1. Press [Settings] > [All Settings] > [General Setup] > [Tray Setting].
2. Press the [Tray Setting: Copy], [Tray Setting: Fax], [Tray Setting: Print], or [Tray Setting: JPEG Print (Media)] option.
3. Press [Tray Priority].
4. Press the option you want.
5. Press .

Related Information

- Paper Settings

Acceptable Paper and Other Print Media

The print quality can be affected by the type of paper you use in the machine.

To get the best print quality for the settings you have chosen, always set the Paper Type to match the type of paper you load.

You can use plain paper, inkjet paper (coated paper), glossy paper, recycled paper and envelopes.

We recommend testing various paper types before buying large quantities.

For best results, use Brother paper.

- When you print on inkjet paper (coated paper) and glossy paper, be sure to choose the proper print media in the **Basic** tab of the printer driver or in the Paper Type setting on the machine.
- When you print on Brother Photo paper, load one extra sheet of the same photo paper in the paper tray.
- When using photo paper, remove each sheet at once to prevent smudging or paper jams.
- Avoid touching the printed surface of the paper immediately after printing; the surface may not be completely dry and may stain your fingers.

Related Information

- Load Paper
- Recommended Print Media
- Handle and Use Print Media
- About Envelopes
- Choose the Right Print Media
- Change the Paper Size and Paper Type
- Paper Handling and Printing Problems

Recommended Print Media

For the best print quality, we recommend using the Brother paper listed in the table.

If Brother paper is not available in your country, we recommend testing various paper types before purchasing large quantities.

Brother paper

Paper Type	Item
A3 Plain	BP60PA3
A3 Glossy Photo	BP71GA3
A3 Inkjet (Matte)	BP60MA3
A4 Plain	BP60PA
A4 Glossy Photo	BP71GA4
A4 Inkjet (Matte)	BP60MA
10 x 15 cm Glossy Photo	BP71GP

Related Information

- Acceptable Paper and Other Print Media

Handle and Use Print Media

- Store paper in its original packaging and keep it sealed. Keep the paper flat and away from moisture, direct sunlight and heat.
- Avoid touching the shiny (coated) side of photo paper.

IMPORTANT

DO NOT use the following kinds of paper:

- Damaged, curled, wrinkled, or irregularly shaped

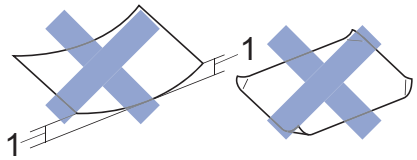

1. **2 mm or greater curl may cause jams to occur.**

- Extremely shiny or highly textured
- Paper that cannot be arranged uniformly when stacked
- Paper made with a short grain

Related Information

- Acceptable Paper and Other Print Media

About Envelopes

- Use envelopes that weigh from 80 to 95 gsm.
- Some envelope sizes require that you set margins in the application. Make sure you do a test print first before printing many envelopes.

IMPORTANT

DO NOT use envelopes that:

- Are loosely constructed
- Have windows
- Are embossed (have raised writing on them)
- Have clasps or staples
- Are pre-printed on the inside
- Are self-adhesive
- Have double flaps

Self-adhesive	Double flaps

You may experience paper feed problems caused by the thickness, size and flap shape of the envelopes you are using.

- Before loading envelopes in the tray, press the flaps, edges and corners to make them as flat as possible, as shown in the illustrations.

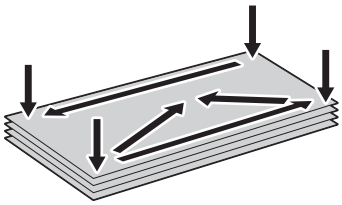

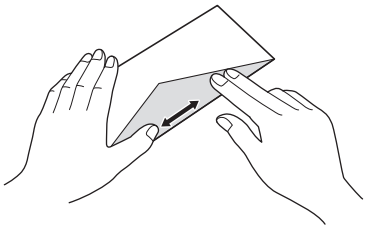

Fan the stack of envelopes well to avoid paper jams and misfeeds.

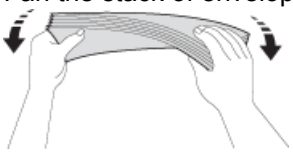

IMPORTANT

If envelopes are "double-feeding," load one envelope in the paper tray at a time.

Related Information

- Acceptable Paper and Other Print Media

- Load Envelopes in Paper Tray #1
- Load Paper in the Multi-purpose Tray (MP Tray)
- Load Paper in the Manual Feed Slot

Choose the Right Print Media

- Paper Type and Size for Each Operation
- Paper Orientation and Capacity of the Paper Trays
- Use the User Defined Paper Size Option in the Printer Driver
- Paper Weight and Thickness
- Load A4, Letter, or Executive Size Paper in Paper Tray #1 / Paper Tray #2
- Load Photo Paper in Paper Tray #1
- Load Envelopes in Paper Tray #1
- Load Paper in the Multi-purpose Tray (MP Tray)
- Load Paper in the Manual Feed Slot

Paper Type and Size for Each Operation

Paper Type	Paper Size		Usage			
			Fax	Copy	JPEG Print	Printer
Cut-Sheet	A3	297 x 420 mm	Yes	Yes	Yes	Yes
	A4	210 x 297 mm	Yes	Yes	Yes	Yes
	Ledger	279.4 x 431.8 mm	Yes	Yes	Yes	Yes
	Letter	215.9 x 279.4 mm	Yes	Yes	Yes	Yes
	Legal	215.9 x 355.6 mm	Yes	Yes	-	Yes
	Mexico Legal	215.9 x 339.85 mm	Yes	Yes	-	Yes
	India Legal	215 x 345 mm	Yes	Yes	-	Yes
	Folio	215.9 x 330.2 mm	Yes	Yes	-	Yes
	16K	195 x 270 mm	-	-	-	Yes
	Executive	184.1 x 266.7 mm	-	-	-	Yes
	B4 (JIS)	257 x 364 mm	Yes	-	-	Yes
	B5 (JIS)	182 x 257 mm	-	-	-	Yes
	B6 (JIS)	128 x 182 mm	-	-	-	Yes
	A5	148 x 210 mm	-	Yes	-	Yes
	A6	105 x 148 mm	-	Yes	-	Yes
Cards	Photo	10 x 15 cm	-	Yes	Yes	Yes
	Photo L	9 x 13 cm	-	-	-	Yes
	Photo 2L	13 x 18 cm	-	-	Yes	Yes
	Index Card	13 x 20 cm	-	-	-	Yes
Envelopes	C5 Envelope	162 x 229 mm	-	-	-	Yes
	DL Envelope	110 x 220 mm	-	-	-	Yes
	Com-10	104.7 x 241.3 mm	-	-	-	Yes
	Monarch	98.4 x 190.5 mm	-	-	-	Yes

Related Information

- Choose the Right Print Media

Paper Orientation and Capacity of the Paper Trays

	Paper Size	Paper Types	No. of sheets
Paper Tray #1	<Landscape> A4, Letter, Executive, B5 (JIS) <Portrait> A3, Ledger, B4 (JIS), Legal, Mexico Legal, India Legal, Folio, A5, B6 (JIS), A6, Envelopes (C5, Com-10, DL, Monarch), Photo (10 x 15 cm), Photo L (9 x 13 cm), Photo 2L (13 x 18 cm), Index card (13 x 20 cm), 16K (195 x 270 mm)	Plain Paper, Recycled Paper	250 [1]
		Inkjet Paper	20
		Glossy Paper, Photo	20
		Index Card	30
		Envelopes	10
Paper Tray #2 (MFC-J3930DW)	<Landscape> A4, Letter <Portrait> A3, Ledger, B4 (JIS), Legal, Mexico Legal, India Legal, Folio	Plain Paper, Recycled Paper	250 [1]
Multi-purpose tray (MP tray) [2] (MFC-J3930DW)	<Landscape> A4, Letter, Executive, B5 (JIS) <Portrait> A3, Ledger, B4 (JIS), Legal, Mexico Legal, India Legal, Folio, A5, B6 (JIS), A6, Envelopes (C5, Com-10, DL, Monarch), Photo (10 x 15 cm), Photo L (9 x 13 cm), Photo 2L (13 x 18 cm), Index card (13 x 20 cm), 16K (195 x 270 mm)	Plain Paper, Recycled Paper	100 [1]
		Inkjet Paper	20 (Up to A4/Letter) 5 (Over A4/Letter)
		Glossy Paper, Photo	20 (Up to A4/Letter) 5 (Over A4/Letter)
		Index Card	50
		Envelopes	20 (Up to A4/Letter) 5 (Over A4/Letter)
Manual Feed Slot (MFC-J3530DW)	<Landscape> A4, Letter, Executive, B5 (JIS) <Portrait> A3, Ledger, B4 (JIS), Legal, Mexico Legal, India Legal, Folio, A5, B6 (JIS), A6, Envelopes (C5, Com-10, DL, Monarch), Photo (10 x 15 cm), Photo L (9 x 13 cm), Photo 2L (13 x 18 cm), Index card (13 x 20 cm), 16K (195 x 270 mm)	Plain Paper, Inkjet Paper, Glossy Paper, Recycled Paper, Photo and Envelopes	1

1 When using plain paper 80 gsm

2 We recommend using MP tray for glossy paper.

Related Information

- Choose the Right Print Media

Use the User Defined Paper Size Option in the Printer Driver

User Defined Size	Paper Orientation
• Width: 88.9 mm - 297.0 mm • Height: 127.0 mm - 431.8 mm	Portrait
• (MFC-J3930DW) Tray #1 and Tray #2 cannot be used for user defined paper sizes.	

Related Information

- Choose the Right Print Media

Paper Weight and Thickness

Paper Type		Weight	Thickness
Cut-Sheet	Plain Paper, Recycled Paper	64 to 120 gsm	0.08 to 0.15 mm
	Inkjet Paper	64 to 200 gsm	0.08 to 0.25 mm
	Glossy Paper [1] [2]	Up to 220 gsm	Up to 0.25 mm
Cards	Photo Card [1] [2] [3]	Up to 200 g/m²	Up to 0.25 mm
	Index Card	Up to 120 gsm	Up to 0.15 mm
Envelopes		80 to 95 gsm	Up to 0.52 mm

1 BP71 260 gsm paper is specially designed for Brother inkjet machines.
2 Up to 0.3 mm for MP Tray (MFC-J3930DW)
3 Up to 220 gsm for MP Tray (MFC-J3930DW)

Related Information

- Choose the Right Print Media
- Paper Handling and Printing Problems

Load Documents

- Load Documents in the Automatic Document Feeder (ADF)
- Load Documents on the Scanner Glass
- Unscannable Area

Load Documents in the Automatic Document Feeder (ADF)

The ADF can hold multiple pages and feeds each sheet individually.

Use paper that is within the sizes and weights shown in the table. Always fan the pages before placing them in the ADF.

Document Sizes and Weights

Length [1]:	148 to 431.8 mm
Width:	105 to 297 mm
Paper Weight:	64 to 90 gsm

1 Up to 900 mm when using the long paper function.

IMPORTANT

- DO NOT pull on the document while it is feeding.
- DO NOT use paper that is curled, wrinkled, folded, ripped, stapled, paper clipped, pasted or taped.
- DO NOT use cardboard, newspaper or fabric.
- Make sure documents with correction fluid or written in ink are completely dry.

(MFC-J3930DW)
Your 2-sided documents can be faxed, copied, or scanned up to A3 size using the ADF.

1. Fan the pages well.
2. Adjust the paper guides (1) to fit the document size.

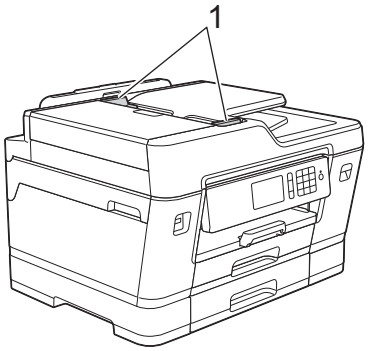

3. Place your document *face up* in the ADF, as shown in the illustration, until you feel the document touch the feed rollers and the machine beeps.

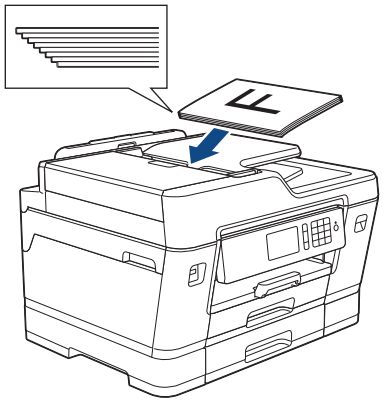

If you loaded a small size document and cannot remove it, lift the ADF document support (1), and then remove the document.

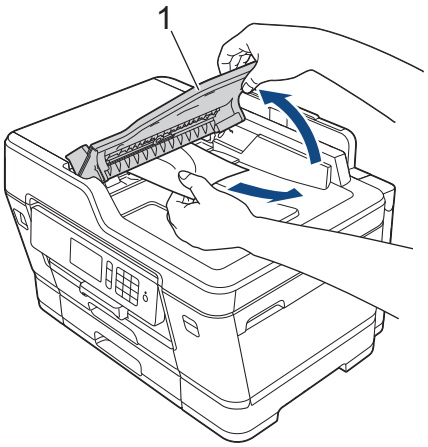

IMPORTANT

DO NOT leave any documents on the scanner glass. If you do this, the ADF may jam.

Related Information

- Load Documents
- Copy a Document
- Error and Maintenance Messages
- Telephone and Fax problems
- Other Problems

Load Documents on the Scanner Glass

Use the scanner glass to fax, copy, or scan one page at a time.

Document Sizes Supported

Length:	Up to 431.8 mm
Width:	Up to 297 mm
Weight:	Up to 2 kg

To use the scanner glass, the ADF must be empty.

1. Lift the document cover.
2. Place the document *face down* in the upper left corner of the scanner glass as shown in the illustration.

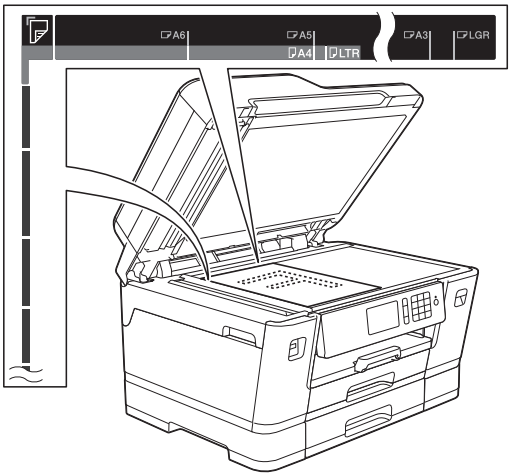

3. Close the document cover.

IMPORTANT

If you are scanning a book or thick document, DO NOT slam or press on the document cover.

Related Information

- Load Documents
- Copy a Document
- Telephone and Fax problems
- Other Problems

Unscannable Area

The unscannable area of a page depends on the settings in the application you are using. The figures below show the typical unscannable measurements.

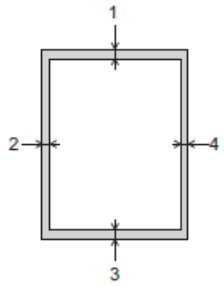

Usage	Document Size	Top (1) Bottom (3)	Left (2) Right (4)
Fax	A3	3 mm	4.5 mm
	A4		3 mm
	Ledger		3.7 mm
	Letter		4 mm
	Legal		
Copy	All paper sizes		3 mm
Scan		1 mm	1 mm

Related Information

- Load Documents

Print

- Print from Your Computer (Windows)
- Print from Your Computer (Mac)
- Print Data Directly from a USB Flash Drive

Print from Your Computer (Windows)

- Print a Photo (Windows)
- Print a Document (Windows)
- Cancel a Print Job (Windows)
- Print More Than One Page on a Single Sheet of Paper (N in 1) (Windows)
- Print as a Poster (Windows)
- Print on Both Sides of the Paper Automatically (Automatic 2-sided Printing) (Windows)
- Print as a Booklet Automatically (Windows)
- Print a Colour Document in Greyscale (Windows)
- Prevent Smudged Printouts and Paper Jams (Windows)
- Use a Preset Print Profile (Windows)
- Change the Default Print Settings (Windows)
- Print Settings (Windows)

Print a Photo (Windows)

1. Select the print command in your application.
2. Select **Brother MFC-XXXX Printer** (where XXXX is the name of your model), and then click the printing properties or preferences button.

   The printer driver window appears.
3. Make sure you have loaded the correct media in the paper tray.

   IMPORTANT

   - For best results, use Brother paper.
   - When you print on Brother photo paper, load one extra sheet of the same photo paper in the paper tray.
4. Click the **Basic** tab.
5. Click the **Media Type** drop-down list, and then select the type of paper you are using.

   IMPORTANT

   To get the best print quality for the settings you have selected, always set the **Media Type** option to match the type of paper you load.
6. Click the **Paper Size** drop-down list, and then select your paper size.
7. Select the **Borderless** check box, if needed.
8. For **Color Mode**, select the **Natural** or **Vivid** option.
9. In the **Orientation** field, select the **Portrait** or **Landscape** option to set the orientation of your printout.

   If your application contains a similar setting, we recommend that you set the orientation using the application.
10. Type the number of copies (1-999) you want in the **Copies** field.
11. Change other printer settings, if needed.
12. Click **OK**.
13. Complete your print operation.

Related Information

- Print from Your Computer (Windows)
- Print Settings (Windows)

Print a Document (Windows)

1. Select the print command in your application.
2. Select **Brother MFC-XXXX Printer** (where XXXX is the name of your model), and then click the printing properties or preferences button.

   The printer driver window appears.
3. Make sure you have loaded the correct size paper in the paper tray.
4. Click the **Basic** tab.
5. Click the **Media Type** drop-down list, and then select the type of paper you are using.

   IMPORTANT

   To get the best print quality for the settings you have selected, always set the **Media Type** option to match the type of paper you load.
6. Click the **Paper Size** drop-down list, and then select your paper size.
7. For **Color Mode**, select the **Natural** or **Vivid** option.
8. In the **Orientation** field, select the **Portrait** or **Landscape** option to set the orientation of your printout.

   If your application contains a similar setting, we recommend that you set the orientation using the application.
9. Type the number of copies (1-999) you want in the **Copies** field.
10. To print multiple pages on a single sheet of paper or print one page of your document on multiple sheets, click the **Multiple Page** drop-down list, and then select your options.
11. Change other printer settings, if needed.
12. Click **OK**.
13. Complete your print operation.

Related Information

- Print from Your Computer (Windows)
- Check the Ink Volume
- Print Settings (Windows)

Cancel a Print Job (Windows)

If a print job was sent to the print queue and did not print, or was sent to the print queue in error, you may have to delete it to allow subsequent jobs to print.

1. Double-click the printer icon in the task tray.
2. Select the print job you want to cancel.
3. Click the **Document** menu.
4. Select **Cancel**.
5. Click **Yes**.

Related Information

- Print from Your Computer (Windows)
- Monitor Machine Status from Your Computer (Windows)

Print More Than One Page on a Single Sheet of Paper (N in 1) (Windows)

1. Select the print command in your application.
2. Select **Brother MFC-XXXX Printer** (where XXXX is the name of your model), and then click the printing properties or preferences button.

   The printer driver window appears.
3. Click the **Basic** tab.
4. In the **Orientation** field, select the **Portrait** or **Landscape** option to set the orientation of your printout.

   If your application contains a similar setting, we recommend that you set the orientation using the application.
5. Click the **Multiple Page** drop-down list, and then select the **2 in 1**, **4 in 1**, **9 in 1**, or **16 in 1** option.
6. Click the **Page Order** drop-down list, and then select your page order.
7. Click the **Border Line** drop-down list, and then select your border line type.
8. Change other printer settings, if needed.
9. Click **OK**, and then complete your print operation.

Related Information

- Print from Your Computer (Windows)
- Print Settings (Windows)

Print as a Poster (Windows)

Enlarge your print size and print the document in poster mode.

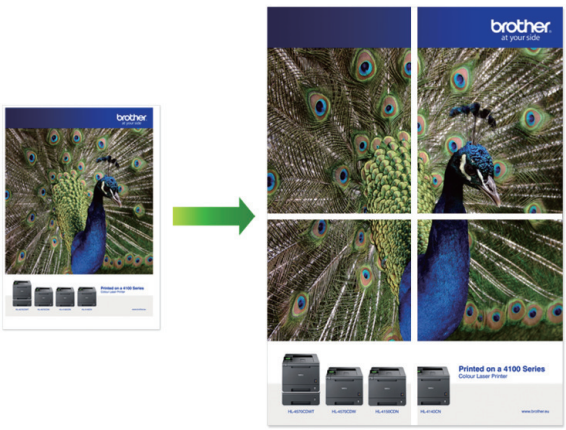

1. Select the print command in your application.
2. Select **Brother MFC-XXXX Printer** (where XXXX is the name of your model), and then click the printing properties or preferences button.

   The printer driver window appears.
3. Click the **Basic** tab.
4. Click the **Multiple Page** drop-down list, and then select the **1 in 2x2 Pages** or **1 in 3x3 Pages** option.
5. Change other printer settings, if needed.
6. Click **OK**.
7. Complete your print operation.

Related Information

- Print from Your Computer (Windows)
- Print Settings (Windows)

Print on Both Sides of the Paper Automatically (Automatic 2-sided Printing) (Windows)

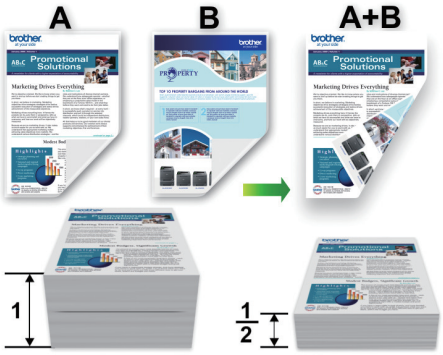

- Make sure the jam clear cover is closed.
- If paper is curled, straighten it and put it back in the paper tray.
- Use regular paper or thin paper. DO NOT use bond paper.
- If the paper is thin, it may wrinkle.

1. Select the print command in your application.
2. Select **Brother MFC-XXXX Printer** (where XXXX is the name of your model), and then click the printing properties or preferences button.

   The printer driver window appears.
3. Click the **Basic** tab.
4. In the **Orientation** field, select the **Portrait** or **Landscape** option to set the orientation of your printout.

   If your application contains a similar setting, we recommend that you set the orientation using the application.
5. Click the **2-sided / Booklet** drop-down list, and then select **2-sided**.
6. Click the **2-sided Settings** button.
7. Select one of the options from the **2-sided Type** menu.

   When 2-sided is selected, four types of 2-sided binding are available for each orientation:

Option for Portrait	Description
Long Edge (Left)	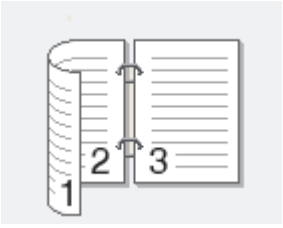
Long Edge (Right)	

Option for Portrait	Description
Short Edge (Top)	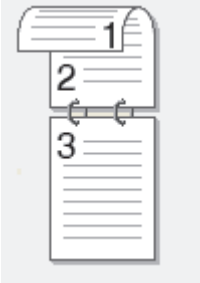
Short Edge (Bottom)	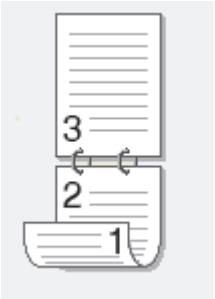

Option for Landscape	Description
Long Edge (Top)	
Long Edge (Bottom)	
Short Edge (Right)	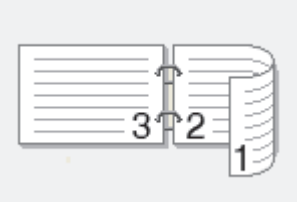
Short Edge (Left)	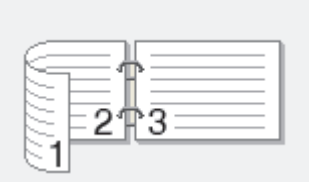

8. Select the **Binding Offset** check box if you want to specify the offset for binding in inches or millimetres.
9. Click **OK** to return to the printer driver window.
10. Change other printer settings, if needed.

The Borderless feature is not available when using this option.

11. Click **OK** again, and then complete your print operation.

Related Information

- Print from Your Computer (Windows)
- Print Settings (Windows)
- Print as a Booklet Automatically (Windows)

Print as a Booklet Automatically (Windows)

Use this option to print a document in booklet format using 2-sided printing. The document's pages will be arranged according to the correct page number and will allow you to fold at the centre of the print output without having to change the order of the printed pages.

- Make sure the jam clear cover is closed.
- If paper is curled, straighten it and put it back in the paper tray.
- Use regular paper or thin paper. DO NOT use bond paper.
- If the paper is thin, it may wrinkle.

1. Select the print command in your application.
2. Select **Brother MFC-XXXX Printer** (where XXXX is the name of your model), and then click the printing properties or preferences button.

   The printer driver window appears.
3. Click the **Basic** tab.
4. In the **Orientation** field, select the **Portrait** or **Landscape** option to set the orientation of your printout.

   If your application contains a similar setting, we recommend that you set the orientation using the application.
5. Click the **2-sided / Booklet** drop-down list, and then select the **Booklet** option.
6. Click the **2-sided Settings** button.
7. Select the one of the options from the **2-sided Type** menu.

   There are two types of 2-sided binding directions available for each orientation:

Option for Portrait	Description
Left Binding	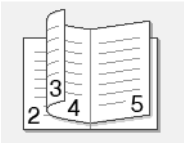
Right Binding	

Option for Landscape	Description
Top Binding	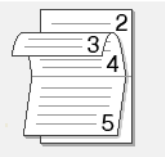
Bottom Binding	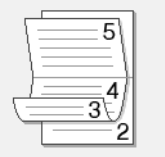

8. Select one of the options from the **Booklet Printing Method** menu.

Option	Description
All Pages at Once	Every page will be printed in booklet format (four pages to every piece of paper, two pages per side). Fold your printout in the middle to create the booklet.
Divide into Sets	This option prints the whole booklet in smaller individual booklet sets, allowing you to fold at the centre of the smaller individual booklet sets without having to change the order of the printed pages. You can specify the number of sheets in each smaller booklet set (from 1-15). This option can be helpful when folding a printed booklet that has a large number of pages.

9. Select the **Binding Offset** check box if you want to specify the offset for binding in inches or millimetres.
10. Click **OK** to return to the printer driver window.
11. Change other printer settings, if needed.

The Borderless feature is not available when using this option.

12. Click **OK**.
13. Complete your print operation.

Related Information

- Print from Your Computer (Windows)
- Print Settings (Windows)
- Print on Both Sides of the Paper Automatically (Automatic 2-sided Printing) (Windows)

Print a Colour Document in Greyscale (Windows)

Greyscale mode makes the print processing speed faster than colour mode. If your document contains colour, selecting Greyscale mode prints your document in 256 levels of greyscale.

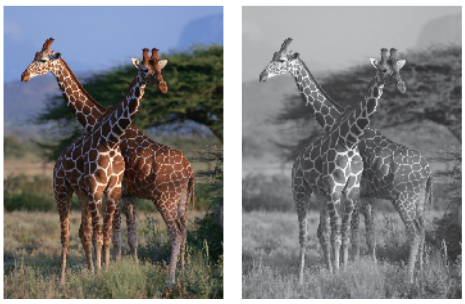

1. Select the print command in your application.
2. Select **Brother MFC-XXXX Printer** (where XXXX is the name of your model), and then click the printing properties or preferences button.

   The printer driver window appears.
3. Click the **Advanced** tab.
4. For **Colour / Greyscale**, select **Greyscale**.
5. Change other printer settings, if needed.
6. Click **OK**.
7. Complete your print operation.

Related Information

- Print from Your Computer (Windows)

Prevent Smudged Printouts and Paper Jams (Windows)

Some types of print media may need more drying time. Change the **Reduce Smudge** option if you have problems with smudged printouts or paper jams.

1. Select the print command in your application.
2. Select **Brother MFC-XXXX Printer** (where XXXX is the name of your model), and then click the printing properties or preferences button.

   The printer driver window appears.
3. Click the **Advanced** tab.
4. Click the **Other Print Options** button.
5. Select the **Reduce Smudge** option on the left side of the screen.
6. Select one of the following options:

Media Type	Option		Description
Plain Paper	**2-sided Printing** or **Simplex Printing**	**Off**	Select this mode to print at normal speed, using a normal amount of ink.
		Low	Select this mode to print at a slower speed, using a normal amount of ink.
		High	Select this mode to print at the same speed as **Low**, but using less ink.
Glossy Paper	**Off**		Select this mode to print at normal speed, using a normal amount of ink.
	On		Select this mode to print at a slower speed, using less ink.

7. Click **OK** to return to the printer driver window.
8. Click **OK**.
9. Complete your print operation.

Related Information

- Print from Your Computer (Windows)
- Paper Handling and Printing Problems
- Change the Print Setting Options When Having Printing Problems

Use a Preset Print Profile (Windows)

Print Profiles are presets designed to give you quick access to frequently-used printing configurations.

1. Select the print command in your application.
2. Select **Brother MFC-XXXX Printer** (where XXXX is the name of your model), and then click the printing properties or preferences button.

   The printer driver window appears.
3. Click the **Print Profiles** tab.

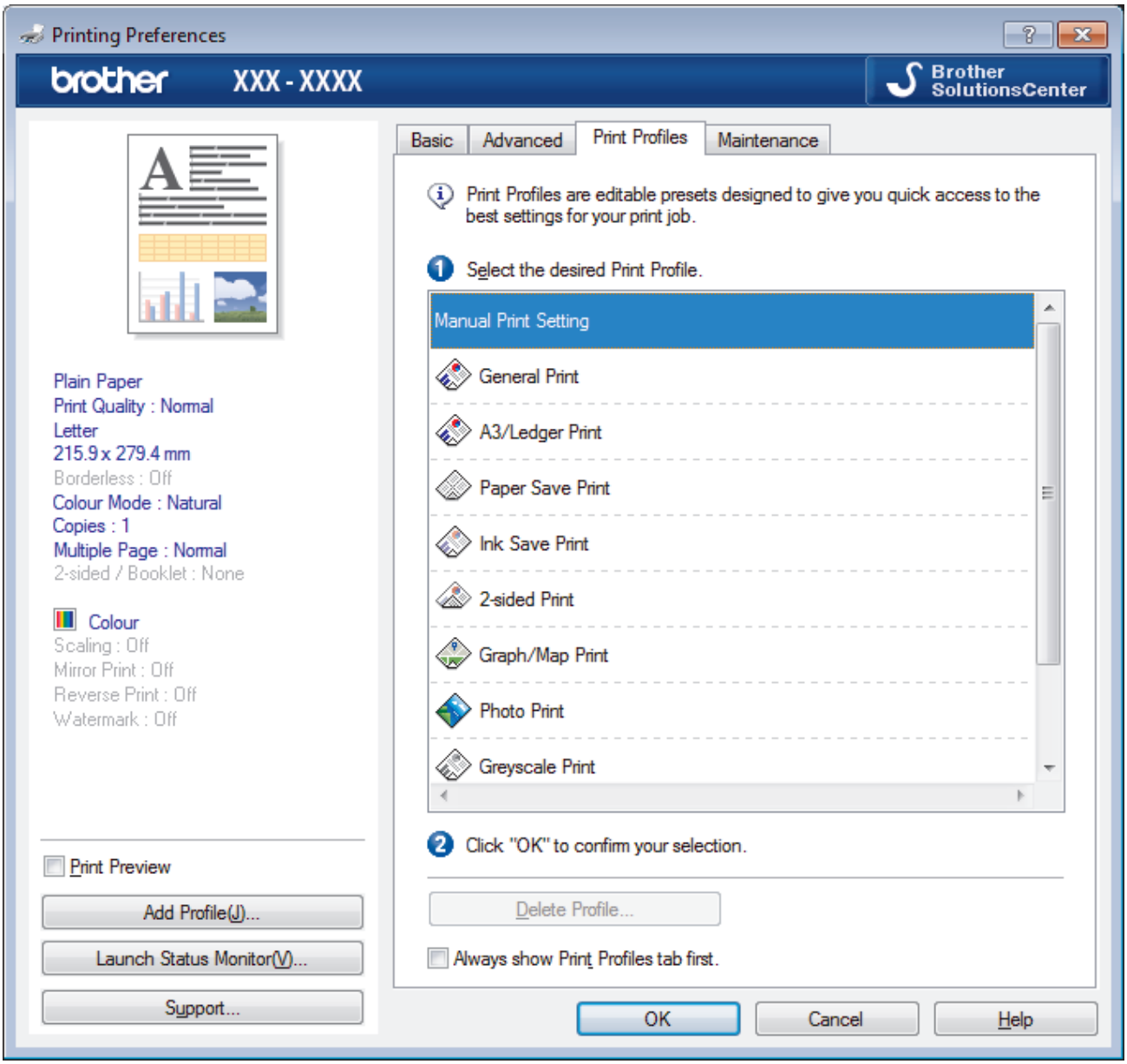

4. Select your profile from the print profile list.

   The profile settings are shown on the left side of the printer driver window.
5. Do one of the following:
   - If the settings are correct for your print job, click **OK**.
   - To change the settings, go back to the **Basic** or **Advanced** tab, change settings, and then click **OK**.

To display the **Print Profiles** tab at the front of the window the next time you print, select the **Always show Print Profiles tab first.** check box.

Related Information

- Print from Your Computer (Windows)
- Create or Delete Your Print Profile (Windows)
- Print Settings (Windows)

Create or Delete Your Print Profile (Windows)

Add up to 20 new print profiles with customised settings.

1. Select the print command in your application.
2. Select **Brother MFC-XXXX Printer** (where XXXX is the name of your model), and then click the printing properties or preferences button.

   The printer driver window appears.
3. Click the **Basic** tab and the **Advanced** tab, and configure the print settings you want for the new Print Profile.
4. Click the **Print Profiles** tab.
5. Do one of the following:

   To create a new print profile:

   a. Click **Add Profile**.

      The **Add Profile** dialog box appears.

   b. Type the new profile name in the **Name** field.

   c. Click the icon you want to use to represent this profile from the icon list.

   d. Click **OK**.

      The new Print Profile name is added to the list in the **Print Profiles** tab.

   To delete a print profile that you created:

   a. Click **Delete Profile**.

      The **Delete Profile** dialog box appears.

   b. Select the profile you want to delete.

   c. Click **Delete**.

   d. Click **Yes**.

   e. Click **Close**.

Related Information

- Use a Preset Print Profile (Windows)

Change the Default Print Settings (Windows)

When you change an application's print settings, the changes only apply to documents printed with that application. To change print settings for all Windows applications, you must configure the printer driver properties.

1. Do one of the following:
   - For Windows Vista and Windows Server 2008

     Click **(Start)** > **Control Panel** > **Hardware and Sound** > **Printers**.
   - For Windows 7 and Windows Server 2008 R2

     Click **(Start)** > **Devices and Printers**.
   - For Windows 8

     Move your mouse to the lower right corner of your desktop. When the menu bar appears, click **Settings**, and then click **Control Panel**. In the **Hardware and Sound** group, click **View devices and printers**.
   - For Windows 10

     Click > **All apps** > **Windows System** > **Control Panel**. In the **Hardware and Sound** group, click **View devices and printers**.
   - For Windows Server 2012

     Move your mouse to the lower right corner of your desktop. When the menu bar appears, click **Settings**, and then click **Control Panel**. In the **Hardware** group, click **View devices and printers**.
   - For Windows Server 2012 R2

     Click **Control Panel** on the **Start** screen. In the **Hardware** group, click **View devices and printers**.
2. Right-click the **Brother MFC-XXXX Printer** icon (where XXXX is your model name), and then select **Printer properties**. If printer driver options appear, select your printer driver.
3. Click the **General** tab, and then click the **Printing Preferences...** or **Preferences...** button.

   The printer driver dialog box appears.
4. Select the print settings you want to use as defaults for all of your Windows programs.
5. Click **OK**.
6. Close the printer properties dialog box.

Related Information

- Print from Your Computer (Windows)
- Print Settings (Windows)

Print Settings (Windows)

Basic Tab

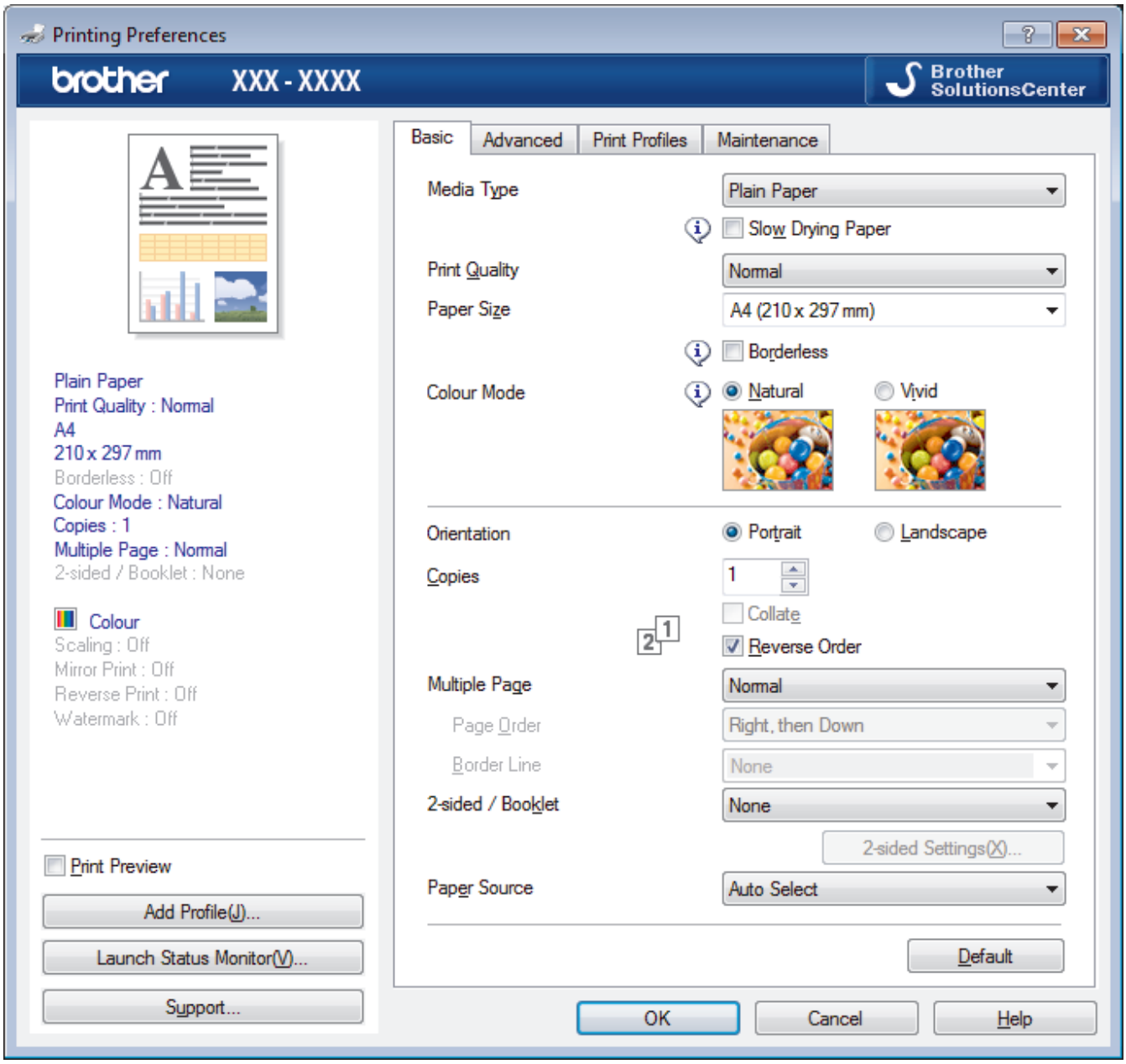

1. **Media Type**

   Select the type of media you want to use. To achieve the best print results, the machine automatically adjusts its print settings according to the selected media type.

   Slow Drying Paper

   Select this option if you use a type of plain paper on which ink dries slowly. This option may cause slight blurring of the text.

2. **Print Quality**

   Select the print resolution you want. Because print quality and speed are related, the higher the quality, the longer it will take to print the document.

3. **Paper Size**

   Select the size of the paper you want to use. You can either choose from standard paper sizes or create a custom paper size.

Borderless

Select this option to print photos without borders. Because the image data is created slightly larger than the paper size you are using, this will cause some cropping of the photo edges.

You may not be able to select the Borderless option for some combinations of media type and quality, or from some applications.

4. **Color Mode**

   Select the colour mode to suit your preference.

5. **Orientation**

   Select the orientation (portrait or landscape) of your printout.

   If your application contains a similar setting, we recommend that you set the orientation using the application.

6. **Copies**

   Type the number of copies (1-999) that you want to print in this field.

   Collate

   Select this option to print sets of multi-page documents in the original page order. When this option is selected, one complete copy of your document will print, and then reprint according to the number of copies you choose. If this option is not selected, then each page will print according to the number of copies chosen before the next page of the document is printed.

   Reverse Order

   Select this option to print your document in reverse order. The last page of your document will be printed first.

7. **Multiple Page**

   Select this option to print multiple pages on a single sheet of paper or print one page of your document on multiple sheets.

   Page Order

   Select the page order when printing multiple pages on a single sheet of paper.

   Border Line

   Select the type of border to use when printing multiple pages on a single sheet of paper.

8. **2-sided / Booklet**

   Select this option to print on both sides of the paper or print a document in booklet format using 2-sided printing.

   2-sided Settings button

   Click this button to select the type of 2-sided binding. Four types of 2-sided bindings are available for each orientation.

9. **Paper Source (available only for certain models)**

   Select the paper source setting according to your print conditions or purpose.

Advanced Tab

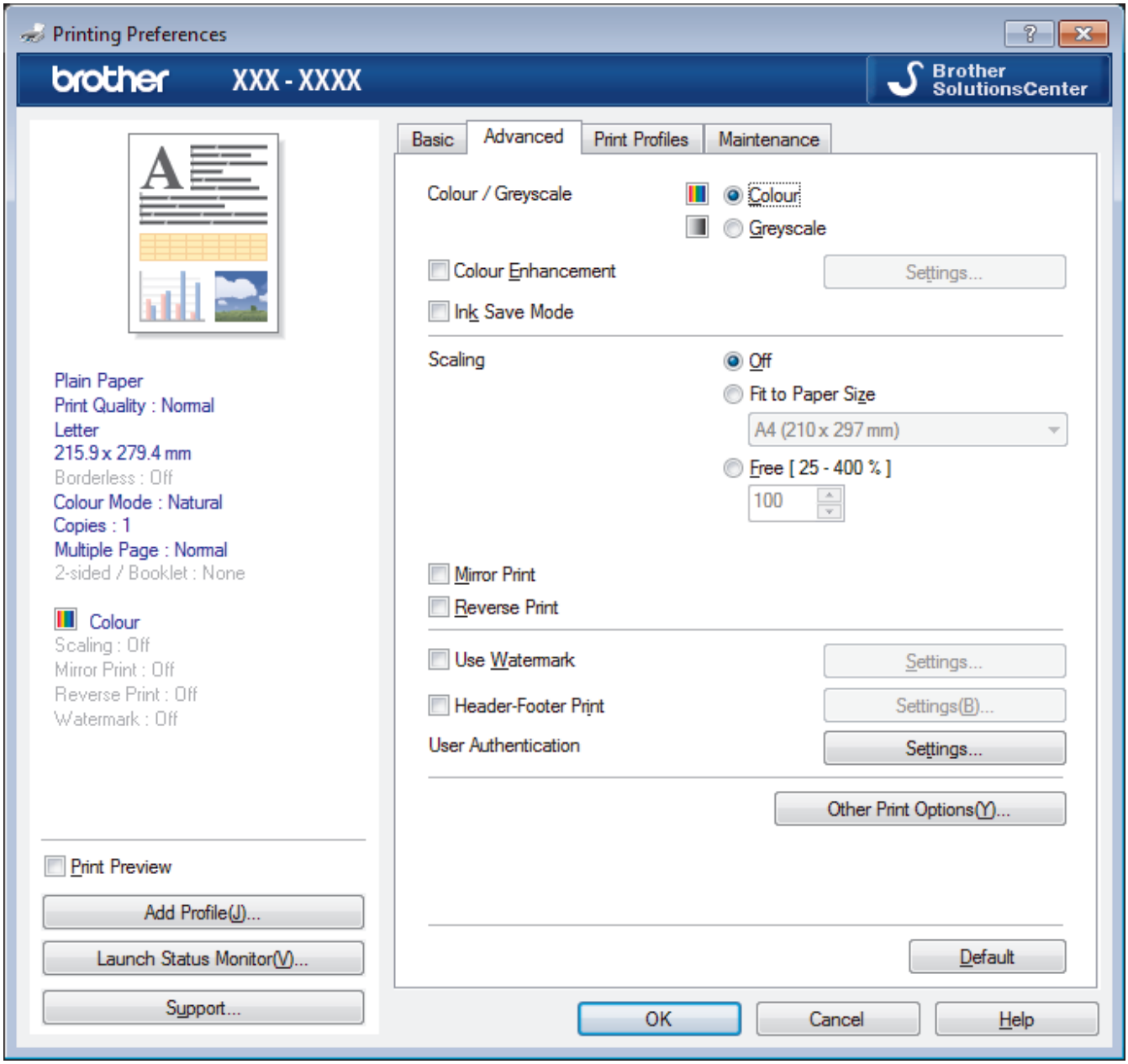

1. **Colour / Greyscale**

   Select colour or greyscale printing. The print speed is faster in greyscale mode than it is in colour mode. If your document contains colour and you select greyscale mode, your document will be printed using 256 levels of greyscale.

2. **Colour Enhancement**

   Select this option to use the Colour Enhancement feature. This feature analyses your image to improve its sharpness, white balance and colour density. This process may take several minutes depending on the image size and your computer's specifications.

3. **Ink Save Mode**

   Select this option to print using lighter colours and emphasise image outlines. The amount of ink that is saved varies, depending on the type of documents printed. Ink Save Mode may make your printouts look different than they appear on your screen.

   The Ink Save Mode feature is supported by technology from Reallusion, Inc.

   REALLUSION

4. **Scaling**

   Select these options to enlarge or reduce the size of the pages in your document.

Fit to Paper Size Setting

Select this option to enlarge or reduce the document pages to fit a specified paper size. When you select this option, select the paper size you want from the drop-down list.

Free

Select this option to enlarge or reduce the document pages manually. When you select this option, type a value into the field.

5. **Mirror Print**

   Select this option to reverse the printed image on the page horizontally from left to right.

6. **Reverse Print**

   Select this option to rotate the printed image 180 degrees.

7. **Use Watermark**

   Select this option to print a logo or text on your document as a watermark. Select one of the preset watermarks, add a new watermark, or use an image file you have created.

8. **Header-Footer Print**

   Select this option to print the date, time and PC login user name on the document.

9. **User Authentication**

   This feature allows you to confirm the restrictions for each user.

10. **Other Print Options button**

Change Data Transfer Mode

Select the print data transfer mode to improve print quality or print speed.

Advanced Colour Settings

Select the method that the machine uses to arrange dots to express halftones.

The printout colour can be adjusted to achieve the closest match to what appears on your computer screen.

Reduce Smudge

Some types of print media may need more drying time. Change this option if you have problems with smudged printouts or paper jams.

Retrieve Printer's Colour Data

Select this option to optimise the print quality using the machine's factory settings, which are set specifically for your Brother machine. Use this option when you have replaced the machine or changed the machine's network address.

Print Archive

Select this option to save the print data as a PDF file to your computer.

Reduce Uneven Lines

Select this option to adjust the print alignment if your printed text becomes blurred or images become faded.

Related Information

- Print from Your Computer (Windows)
- Error and Maintenance Messages
- Paper Handling and Printing Problems
- Print a Photo (Windows)
- Print a Document (Windows)
- Print More Than One Page on a Single Sheet of Paper (N in 1) (Windows)
- Print as a Poster (Windows)
- Print on Both Sides of the Paper Automatically (Automatic 2-sided Printing) (Windows)
- Print as a Booklet Automatically (Windows)

- Use a Preset Print Profile (Windows)
- Change the Default Print Settings (Windows)
- Change the Print Setting Options When Having Printing Problems

Print from Your Computer (Mac)

- Print a Photo (Mac)
- Print a Document (Mac)
- Print on Both Sides of the Paper Automatically (Automatic 2-sided Printing) (Mac)
- Print More Than One Page on a Single Sheet of Paper (N in 1) (Mac)
- Print a Colour Document in Greyscale (Mac)
- Prevent Smudged Printouts and Paper Jams (Mac)
- Print Options (Mac)

Print a Photo (Mac)

1. Make sure you have loaded the correct media in the paper tray.

IMPORTANT

- For best results, use Brother paper.
- When you print on Brother photo paper, load one extra sheet of the same photo paper in the paper tray.

2. From an application, such as Apple Preview, click the **File** menu, and then select **Print**.
3. Select **Brother MFC-XXXX** (where XXXX is your model name).

For more page setup options, click the **Show Details** button.

4. Click the **Paper Size** pop-up menu, and then select your paper size.

To print photographs without margins, select a borderless paper size option.

5. Click the **Orientation** button that matches the way you want the photo to print.
6. Click the application pop-up menu, and then select **Print Settings**.

   The **Print Settings** options appear.
7. Click the **Media Type** pop-up menu, and then select the media type you want to use.

IMPORTANT

To get the best print quality for the settings you have selected, always set the **Media Type** option to match the type of paper you load.

8. Change other printer settings, if needed.
9. Click **Print**.

Related Information

- Print from Your Computer (Mac)
- Paper Handling and Printing Problems
- Print Options (Mac)

Print a Document (Mac)

1. Make sure you have loaded the correct size paper in the paper tray.
2. From an application, such as Apple TextEdit, click the **File** menu, and then select **Print**.
3. Select **Brother MFC-XXXX** (where XXXX is your model name).

For more page setup options, click the **Show Details** button.

4. Click the **Paper Size** pop-up menu, and then select your paper size.
5. Select the **Orientation** option that matches the way you want the document to print.
6. Click the application pop-up menu, and then select **Print Settings**.

   The **Print Settings** options appear.
7. Click the **Media Type** pop-up menu, and then select the media type you want to use.

IMPORTANT

To get the best print quality for the settings you have selected, always set the **Media Type** option to match the type of paper you load.

8. Change other printer settings, if needed.
9. Click **Print**.

Related Information

- Print from Your Computer (Mac)
- Check the Ink Volume
- Print Options (Mac)

Print on Both Sides of the Paper Automatically (Automatic 2-sided Printing) (Mac)

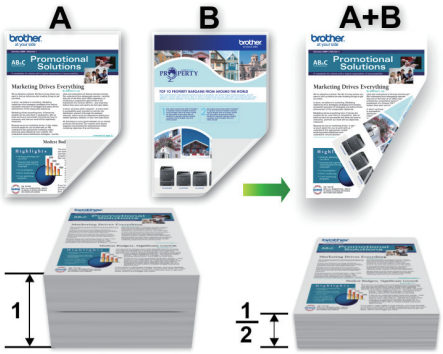

1. From an application, such as Apple TextEdit, click the **File** menu, and then select **Print**.
2. Select **Brother MFC-XXXX** (where XXXX is your model name).

For more page setup options, click the **Show Details** button.

3. Select the **Orientation** option that matches the way you want the document to print.
4. Click the application pop-up menu, and then select **Layout**.
   The **Layout** setting options appear.
5. In the **Two-Sided** section, select the **Short-Edge binding** or **Long-Edge binding** option.
6. Change other printer settings, if needed.

The Borderless feature is not available when using this option.

7. Click **Print**.

Related Information

- Print from Your Computer (Mac)
- Print Options (Mac)

Print More Than One Page on a Single Sheet of Paper (N in 1) (Mac)

1. From an application, such as Apple TextEdit, click the **File** menu, and then select **Print**.
2. Select **Brother MFC-XXXX** (where XXXX is your model name).

For more page setup options, click the **Show Details** button.

3. Click the application pop-up menu, and then select **Layout**.
   The **Layout** setting options appear.
4. Click the **Pages per Sheet** pop-up menu, and then select the number of pages to print on each sheet.
5. Select the **Layout Direction** option.
6. Click the **Border** pop-up menu, and then select your border line type.
7. Change other printer settings, if needed.
8. Click **Print**.

Related Information

- Print from Your Computer (Mac)
- Print Options (Mac)

Print a Colour Document in Greyscale (Mac)

Greyscale mode makes the print processing speed faster than colour mode. If your document contains colour, selecting Greyscale mode prints your document in 256 levels of greyscale.

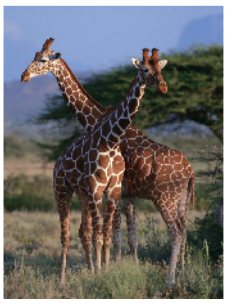

1. From an application, such as Apple TextEdit, click the **File** menu, and then select **Print**.
2. Select **Brother MFC-XXXX** (where XXXX is your model name).

For more page setup options, click the **Show Details** button.

3. Click the application pop-up menu, and then select **Print Settings**.
   The **Print Settings** options appear.
4. Click the **Colour / Greyscale** pop-up menu, and then select the **Greyscale** option.
5. Change other printer settings, if needed.
6. Click **Print**.

Related Information

- Print from Your Computer (Mac)

Prevent Smudged Printouts and Paper Jams (Mac)

Some types of print media may need more drying time. Change the **Reduce Smudge** option if you have problems with smudged printouts or paper jams.

1. From an application, such as Apple TextEdit, click the **File** menu, and then select **Print**.
2. Select **Brother MFC-XXXX** (where XXXX is your model name).

For more page setup options, click the **Show Details** button.

3. Click the application pop-up menu, and then select **Print Settings**.

   The **Print Settings** options appear.
4. Click the **Advanced** print settings list.
5. Click the **Reduce Smudge** menu.
6. Select one of the following options:

Media Type	Option		Description
Plain Paper	**2-sided Printing** or **Simplex Printing**	**Off**	Select this mode to print at normal speed, using a normal amount of ink.
		Low	Select this mode to print at a slower speed, using a normal amount of ink.
		High	Select this mode to print at the same speed as **Low**, but using less ink.
Glossy Paper	**Off**		Select this mode to print at normal speed, using a normal amount of ink.
	On		Select this mode to print at a slower speed, using less ink.

7. Change other printer settings, if needed.
8. Click **Print**.

Related Information

- Print from Your Computer (Mac)
- Paper Handling and Printing Problems
- Change the Print Setting Options When Having Printing Problems

Print Options (Mac)

Page Setup

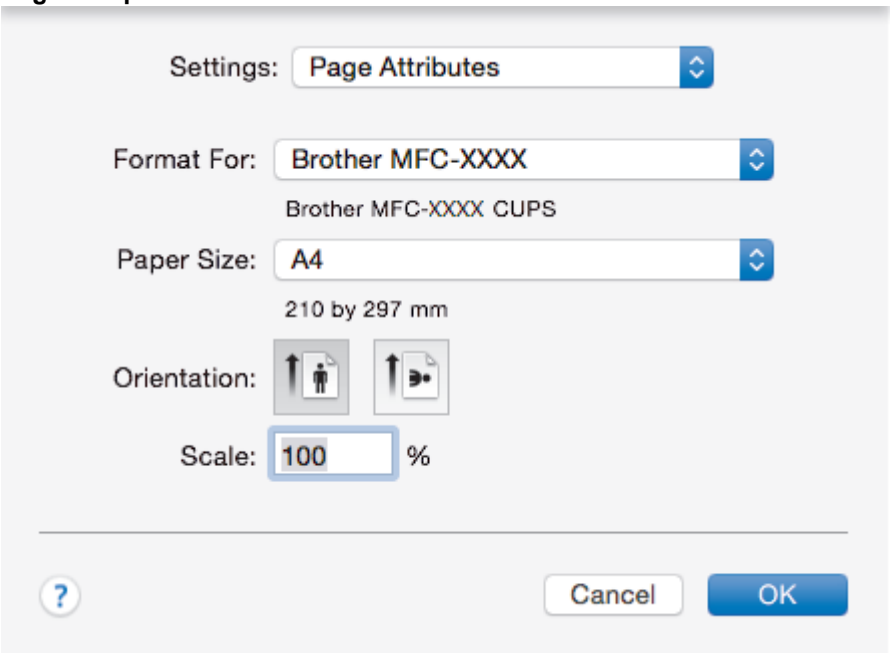

1. **Paper Size**

   Select the size of the paper you want to use. You can either choose from standard paper sizes or create a custom paper size.

2. **Orientation**

   Select the orientation (portrait or landscape) of your printout.

   If your application contains a similar setting, we recommend that you set the orientation using the application.

3. **Scale**

   Type a value into the field to enlarge or reduce the pages in your document to fit the selected paper size.

Layout

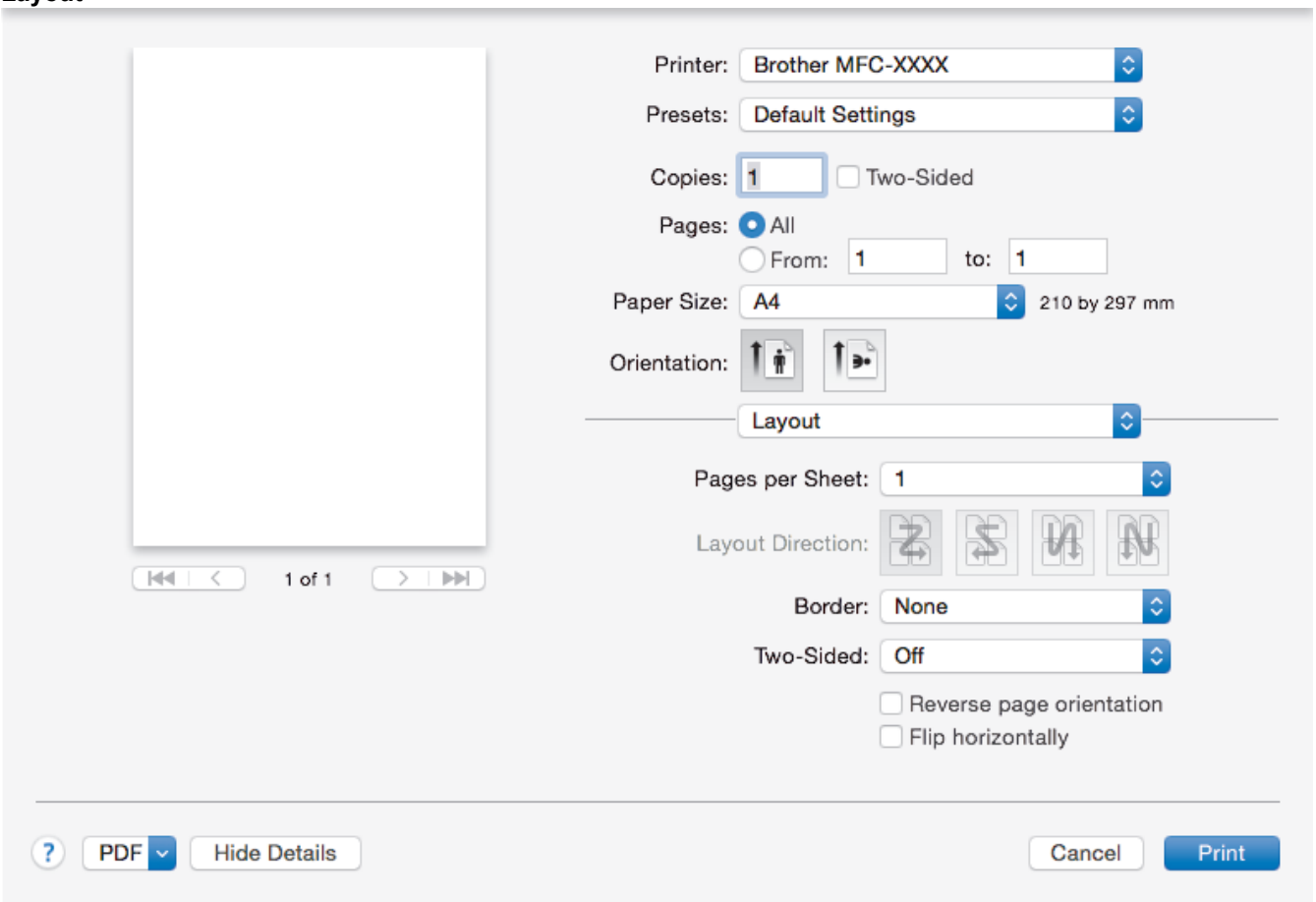

1. **Pages per Sheet**

   Select the number of pages to print on a single sheet of paper.
2. **Layout Direction**

   Select the page order when printing multiple pages on a single sheet of paper.
3. **Border**

   Select the type of border to use when printing multiple pages on a single sheet of paper.
4. **Two-Sided (available only for certain models)**

   Select whether to print on both sides of the paper.
5. **Reverse Page Orientation**

   Select this option to rotate the printed image 180 degrees.
6. **Flip horizontally**

   Select this option to reverse the printed image on the page horizontally from left to right.

Paper Handling

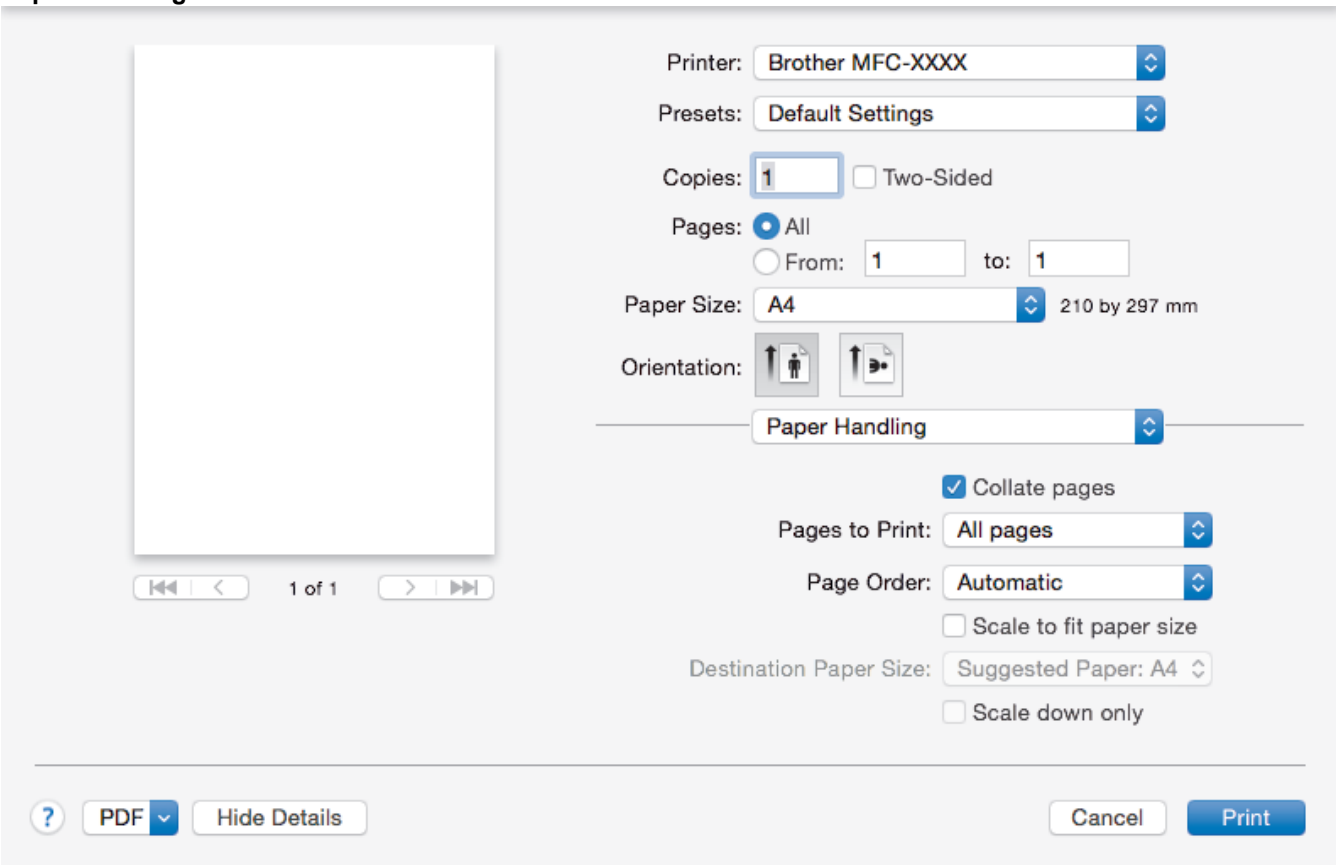

1. **Collate pages**

   Select this option to print sets of multi-page documents in the original page order. When this option is selected, one complete copy of your document will print, and then reprint according to the number of copies you choose. If this option is not selected, then each page will print according to the number of copies chosen before the next page of the document is printed.

2. **Page Order**

   Select the page order.

3. **Scale to fit paper size**

   Select this option to enlarge or reduce the pages in your document to fit the selected paper size.

4. **Destination Paper Size**

   Select the paper size to print on.

5. **Scale down only**

   Select this option if you want to reduce the pages in your document when they are too large for the selected paper size. If this option is selected and the document is formatted for a paper size that is smaller than the paper size you are using, the document will be printed at its original size.

Print Settings

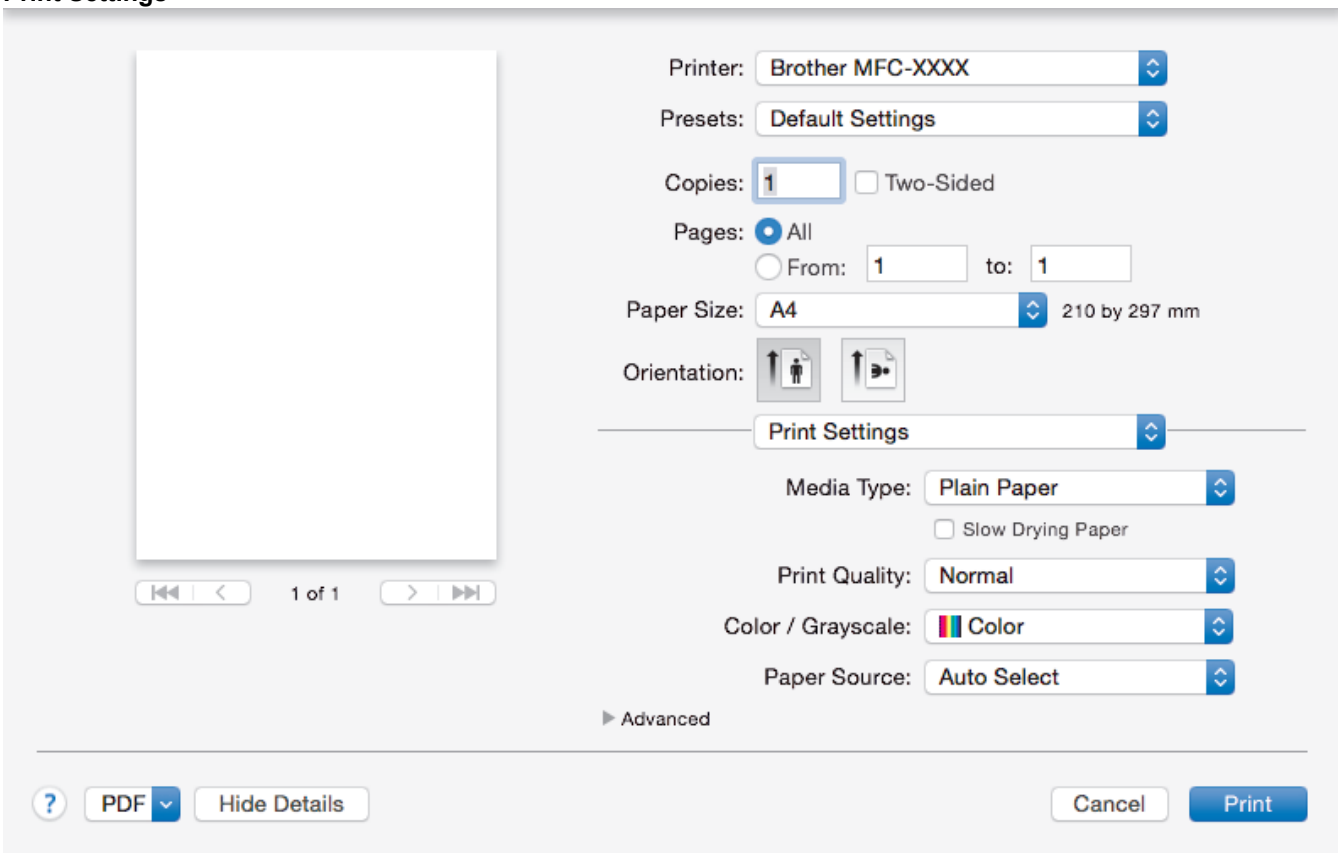

1. **Media Type**

   Select the type of media you want to use. To achieve the best print results, the machine automatically adjusts its print settings according to the selected media type.

2. **Slow Drying Paper**

   Select this option if you use a type of plain paper on which ink dries slowly. This option may cause slight blurring of the text.

3. **Print Quality**

   Select the print resolution you want. Because print quality and speed are related, the higher the quality, the longer it will take to print the document.

4. **Colour / Greyscale**

   Select colour or greyscale printing. The print speed is faster in greyscale mode than it is in colour mode. If your document contains colour and you select greyscale mode, your document will be printed using 256 levels of greyscale.

5. **Paper Source (available only for certain models)**

   Select the paper source setting according to your print conditions or purpose.

6. **Advanced**

   Change Data Transfer Mode

   Select the print data transfer mode to improve print quality or print speed.

   Reduce Uneven Lines

   Select this option to adjust the print alignment if your printed text becomes blurred or images become faded.

   Reduce Smudge

   Some types of print media may need more drying time. Change this option if you have problems with smudged printouts or paper jams.

Other Print Options

Paper Thickness

Select the appropriate paper thickness.

Bi-Directional Printing

Select this option to increase the print speed. When this option is selected, the print head prints in both directions. When this option is cleared, the print head prints in only one direction, resulting in higher quality printouts but causing slower print speeds.

Sometimes, the movement of the print head may vary due to environmental conditions. This may be seen when you print vertical lines and they do not align. If you encounter this problem, turn off the Bi-Directional Printing feature.

Color Settings

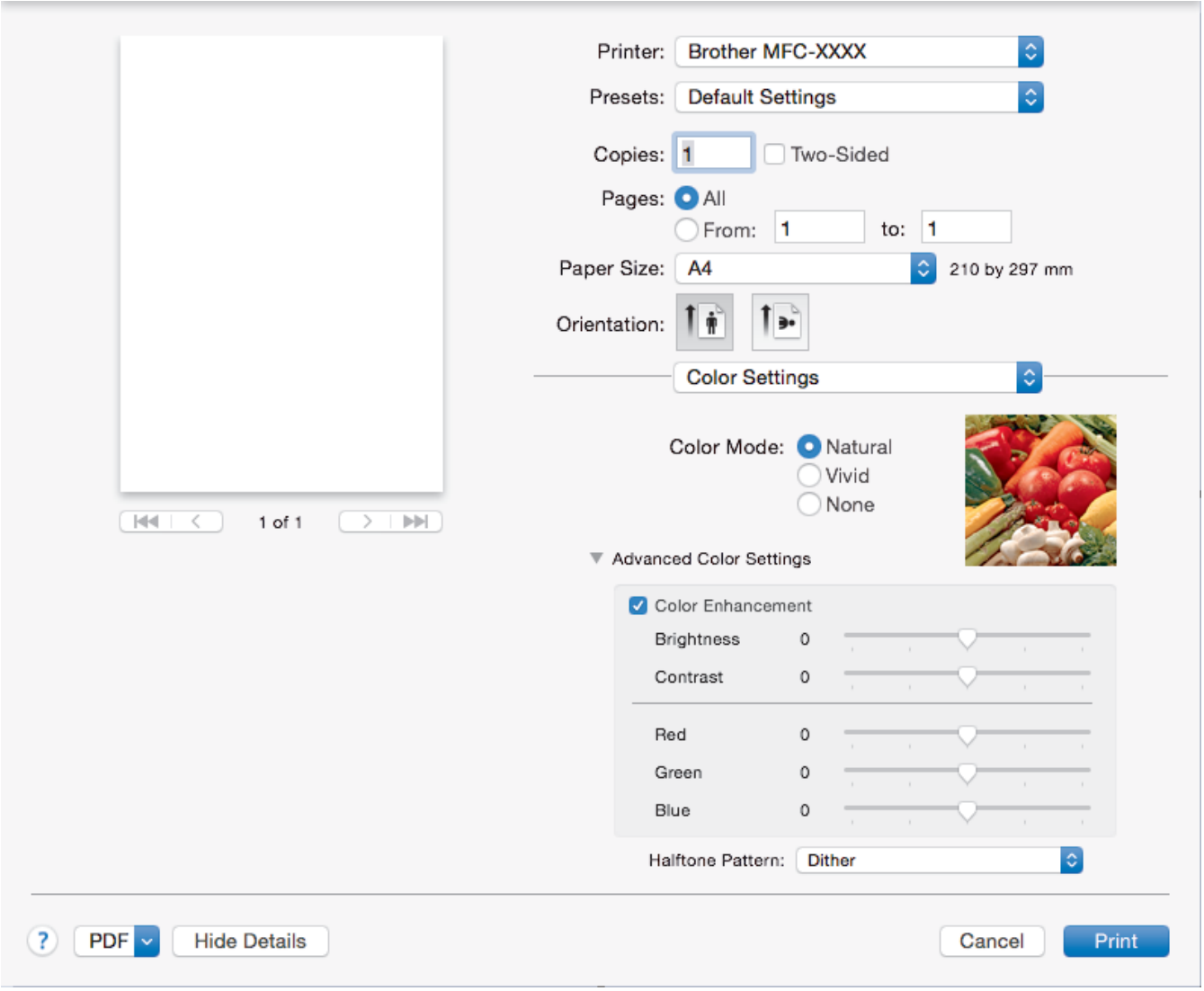

1. **Color Mode**

   Select the colour mode to suit your preference.

2. **Advanced Color Settings**

   Click the disclosure triangle to view the Advanced Colour Settings. Select the Colour Enhancement check box, and then set the options using the sliders. This process may take several minutes depending on the size of the image and the specifications of your computer.

Related Information

- Print from Your Computer (Mac)
- Error and Maintenance Messages
- Paper Handling and Printing Problems

- Print a Photo (Mac)
- Print a Document (Mac)
- Print on Both Sides of the Paper Automatically (Automatic 2-sided Printing) (Mac)
- Print More Than One Page on a Single Sheet of Paper (N in 1) (Mac)
- Change the Print Setting Options When Having Printing Problems

Print Data Directly from a USB Flash Drive

- Compatible USB Flash Drives
- Print Photos Directly from a USB Flash Drive

Compatible USB Flash Drives

IMPORTANT

The USB direct interface supports only USB flash drives and digital cameras that use the USB mass storage standard. Other USB devices are not supported.

Compatible Memory Cards		Slot
USB flash drive		USB slot 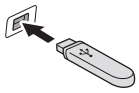

Compatible USB Flash Drives	
USB Class	USB Mass Storage Class
USB Mass Storage Sub Class	SCSI or SFF-8070i
Transfer protocol	Bulk transfer Only
Format [1]	FAT12/FAT16/FAT32/exFAT
Sector size	Max. 4096 Byte
Encryption	Encrypted devices are not supported.

1 NTFS format is not supported.

Related Information

- Print Data Directly from a USB Flash Drive
- Save Scanned Data to a USB Flash Drive

Print Photos Directly from a USB Flash Drive

Even if your machine is *not* connected to your computer, you can print photos directly from a USB Flash memory drive, scan documents and save them directly to a USB flash drive.

- Important Information about Photo Printing
- Print Photos from a USB Flash Drive on the Brother Machine

Important Information about Photo Printing

Your machine is designed to be compatible with modern digital camera image files and USB flash drives. Read the points below to avoid errors:

- The image file extension must be .JPG (other image file extensions like .JPEG, .TIF, .GIF and so on will not be recognised).
- Direct photo printing must be performed separately from photo printing operations using the computer. (Simultaneous operation is not available.)
- The machine can read up to 999 files [1] on a USB flash drive.

Be aware of the following:

- When printing an index or image, the machine will print all the valid images, even if one or more images have been corrupted. Corrupted images will not be printed.
- Your machine supports USB flash drives that have been formatted by Windows.

Related Information

- Print Photos Directly from a USB Flash Drive

1 The folder inside USB flash drives is also counted.

Print Photos from a USB Flash Drive on the Brother Machine

- Preview and Print Photos from a USB Flash Drive
- Print a Photo Index Sheet (Thumbnails) from a USB Flash Drive
- Print Photos by Image Number
- Print Photos with Auto Cropping
- Print Borderless Photos from a USB Flash Drive
- Print the Date from Your Photo's Data
- Print Settings for Photos

Preview and Print Photos from a USB Flash Drive

Preview your photos on the LCD before you print them. Print images that are stored on a USB flash drive.

- If your photos are large files, there may be a delay before each photo is displayed.

>> MFC-J3530DW
>> MFC-J3930DW

MFC-J3530DW

1. Put a USB flash drive in the USB slot.

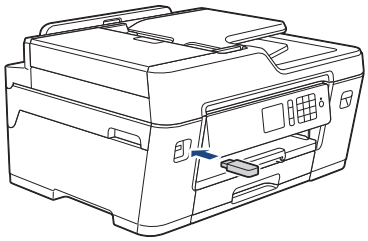

2. Press [JPEG Print] > [Select Files].
3. Press ◀ or ▶ to display the photo you want to print, and then press it.

To print all photos, press [Print All], and then press [Yes] to confirm.

4. Enter the number of copies in one of the following ways:
   - Press [−] or [+] on the touchscreen.
   - Press × 01 to display the keyboard on the touchscreen, and then enter the number of copies using the touchscreen keyboard. Press [OK].
   - Enter the number of copies using the dial pad.
5. Press [OK].
6. Repeat the last three steps until you have selected all the photos you want to print.
7. Press [OK].
8. Read and confirm the displayed list of options.
9. To change the print settings, press [Print Settings].

   When finished, press [OK].
10. Press [Start].

MFC-J3930DW

1. Put a USB flash drive in the USB slot.

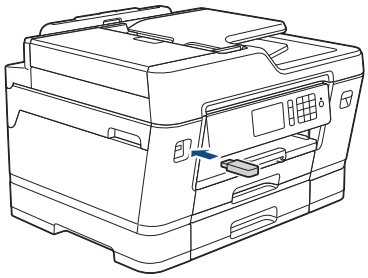

2. Press [JPEG Print] > [Select Files].
3. Swipe left or right or press ◀ or ▶ to display the photo you want to print, and then press it.

To print all photos, press [Print All], and then press [Yes] to confirm.

4. Enter the number of copies in one of the following ways:
   - Press [−] or [+] on the touchscreen.
   - Press × 01 to display the keyboard on the touchscreen, and then enter the number of copies using the touchscreen keyboard. Press [OK].
   - Enter the number of copies using the dial pad.
5. Press [OK].
6. Repeat the last three steps until you have selected all the photos you want to print.
7. Press [OK].
8. Read and confirm the displayed list of options.
9. To change the print settings, press [Print Settings].
   When finished, press [OK].
10. Press [Start].

Related Information

- Print Photos from a USB Flash Drive on the Brother Machine
- Print Settings for Photos

Print a Photo Index Sheet (Thumbnails) from a USB Flash Drive

Print a photo Index Sheet to see small preview versions of all pictures on your USB flash drive.

- The machine assigns numbers for images (such as No.1, No.2, No.3, and so on).

  The machine does not recognise any other numbers or file names that your digital camera or computer has used to identify the pictures.
- Only file names that are 20 characters or less will be printed correctly on the index sheet.
- File names cannot be printed correctly if they contain non-alphanumeric characters, but non-alphanumeric characters do not affect photo print settings.

>> MFC-J3530DW
>> MFC-J3930DW

MFC-J3530DW

1. Put a USB flash drive in the USB slot.
2. Press [JPEG Print] > [Index Print] > [Print Index Sheet].
3. If you want to change the print settings, press [Print Settings].

   When finished, press [OK].

Option	Description
Paper Type	Select the paper type.
Paper Size	Select the paper size.

4. Press [Start].

MFC-J3930DW

1. Put a USB flash drive in the USB slot.
2. Press [JPEG Print] > [Index Print].
3. Press [Print Index Sheet].
4. If you want to change the print settings, press [Print Settings].

   When finished, press [OK].

Option	Description
Paper Type	Select the paper type.
Paper Size	Select the paper size.

5. Press [Start].

Related Information

- Print Photos from a USB Flash Drive on the Brother Machine
- Print Photos by Image Number

Print Photos by Image Number

Before you can print an individual image, you must print the photo Index Sheet (thumbnails) to know the image number.

>> MFC-J3530DW
>> MFC-J3930DW

MFC-J3530DW

1. Put a USB flash drive in the USB slot.
2. Press [JPEG Print] > [Index Print] > [Print Photos].
3. Enter the image numbers you want to print using the photo Index Sheet. After you have selected the image numbers, press [OK].

- Enter multiple numbers at one time using a comma or a hyphen. For example, enter **1, 3, 6** to print images No.1, No.3 and No.6. Print a range of images using a hyphen. For example, enter **1-5** to print images No.1 to No.5.
- Enter up to 12 characters (including commas and hyphens) for the image numbers you want to print.

4. Enter the number of copies in one of the following ways:
   - Press [-] or [+] on the touchscreen.
   - Press × 01 to display the keyboard on the touchscreen, and then enter the number of copies using the touchscreen keyboard. Press [OK].
   - Enter the number of copies using the dial pad.
5. To change the print settings, press [Print Settings].

   When finished, press [OK].
6. Press [Start].

MFC-J3930DW

1. Put a USB flash drive in the USB slot.
2. Press [JPEG Print] > [Index Print].
3. Press [Print Photos Using Index No.].
4. Enter the image numbers you want to print using the photo Index Sheet. After you have selected the image numbers, press [OK].

- Enter multiple numbers at one time using a comma or a hyphen. For example, enter **1, 3, 6** to print images No.1, No.3 and No.6. Print a range of images using a hyphen. For example, enter **1-5** to print images No.1 to No.5.
- Enter up to 12 characters (including commas and hyphens) for the image numbers you want to print.

5. Enter the number of copies in one of the following ways:
   - Press [-] or [+] on the touchscreen.
   - Press × 01 to display the keyboard on the touchscreen, and then enter the number of copies using the touchscreen keyboard. Press [OK].
   - Enter the number of copies using the dial pad.
6. To change the print settings, press [Print Settings].

   When finished, press [OK].
7. Press [Start].

Related Information

- Print Photos from a USB Flash Drive on the Brother Machine
- Print a Photo Index Sheet (Thumbnails) from a USB Flash Drive
- Print Settings for Photos

Print Photos with Auto Cropping

If your photo is too long or too wide to fit the space in your layout, part of the image will be cropped.

- The factory setting is On. To print the whole image, change this setting to Off.
- If you set the [Cropping] setting to Off, set the [Borderless] setting to Off, also.

Cropping: On

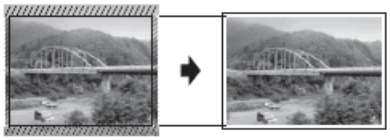

Cropping: Off

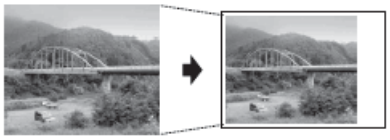

>> MFC-J3530DW
>> MFC-J3930DW

MFC-J3530DW

1. Put a USB flash drive in the USB slot.
2. Press [JPEG Print] > [Select Files].
3. Press ◀ or ▶ to display each photo. When the photo you want appears, press it, and then press [OK].
4. Press [OK].
5. Press [Print Settings] > [Cropping].
6. Press [On] (or [Off]).
7. When finished, press ⮌ or [OK].
8. Press [Start].

MFC-J3930DW

1. Put a USB flash drive in the USB slot.
2. Press [JPEG Print] > [Select Files].
3. Swipe left or right or press ◀ or ▶ to display each photo. When the photo you want appears, press it, and then press [OK].
4. Press [OK].
5. Press [Print Settings] > [Cropping].
6. Press [On] (or [Off]).
7. When finished, press ⮌ or [OK]. Press [Start].

Related Information

- Print Photos from a USB Flash Drive on the Brother Machine
- Other Problems

Print Borderless Photos from a USB Flash Drive

This feature expands the printable area to the edges of the paper. Printing time will be slower.

>> MFC-J3530DW
>> MFC-J3930DW

MFC-J3530DW

1. Put a USB flash drive in the USB slot.
2. Press [JPEG Print] > [Select Files].
3. Press ◀ or ▶ to display each photo. When the photo you want appears, press it, and then press [OK].
4. Press [OK].
5. Press [Print Settings] > [Borderless].
6. Press [On] (or [Off]).
7. When finished, press ⮌ or [OK].
8. Press [Start].

MFC-J3930DW

1. Put a USB flash drive in the USB slot.
2. Press [JPEG Print] > [Select Files].
3. Swipe left or right or press ◀ or ▶ to display each photo. When the photo you want appears, press it, and then press [OK].
4. Press [OK].
5. Press [Print Settings] > [Borderless].
6. Press [On] (or [Off]).
7. When finished, press ⮌ or [OK]. Press [Start].

Related Information

- Print Photos from a USB Flash Drive on the Brother Machine
- Other Problems

Print the Date from Your Photo's Data

Print the date if it is already in your photo's information. The date will be printed on the lower-right corner. To use this setting, the photo must include the date.

>> MFC-J3530DW
>> MFC-J3930DW

MFC-J3530DW

1. Put a USB flash drive in the USB slot.
2. Press [JPEG Print] > [Select Files].
3. Press ◀ or ▶ to display each photo. When the photo you want appears, press it, and then press [OK].
4. Press [OK].
5. Press [Print Settings] > [Date Print].
6. Press [On] (or [Off]).
7. When finished, press ⮌ or [OK].
8. Press [Start].

MFC-J3930DW

1. Put a USB flash drive in the USB slot.
2. Press [JPEG Print] > [Select Files].
3. Swipe left or right or press ◀ or ▶ to display each photo. When the photo you want appears, press it, and then press [OK].
4. Press [OK].
5. Press [Print Settings] > [Date Print].
6. Press [On] (or [Off]).
7. When finished, press ⮌ or [OK]. Press [Start].

Related Information

- Print Photos from a USB Flash Drive on the Brother Machine

Print Settings for Photos

MFC-J3530DW

Press the [Print Settings] option to display the settings shown in the table.

Option	Description
Print Quality	Select the print resolution for your type of document. When you select the Inkjet Paper option in the Paper Type setting, you can select only Fine.
Paper Type	Select the paper type.
Paper Size	Select the paper size.
Print Layout	Select the print layout.
Brightness	Adjust the brightness.
Contrast	Adjust the contrast. Increasing the contrast will make an image look sharper and more vivid.
Cropping	Crop the image around the margin to fit the paper size or print size. Turn this feature off when you want to print whole images or prevent unwanted cropping.
Borderless	Expand the printable area to fit the edges of the paper.
Date Print	Print the date on your photo.
Set New Default	Save the print settings you use most often by setting them as the defaults.
Factory Reset	Restore any changed print settings back to the factory settings.

MFC-J3930DW

Press the [Print Settings] button to display the settings shown in the table.

Option	Description
Print Quality	Select the print resolution for your type of document. When you select the Inkjet Paper option in the Paper Type option, you can select only Fine.
Paper Type	Select the paper type.
Paper Size	Select the paper size.
Tray Select	Select the tray.
Print Layout	Select the print layout.
Brightness	Adjust the brightness.
Contrast	Adjust the contrast. Increasing the contrast will make an image look sharper and more vivid.
Cropping	Crop the image around the margin to fit the paper size or print size. Turn this feature off when you want to print whole images or prevent unwanted cropping.
Borderless	Expand the printable area to fit the edges of the paper.
Date Print	Print the date on your photo.

Option	Description
Set New Default	Save the print settings you use most often by setting them as the defaults.
Factory Reset	Restore any changed print settings back to the factory settings.

Related Information

- Print Photos from a USB Flash Drive on the Brother Machine
- Preview and Print Photos from a USB Flash Drive
- Print Photos by Image Number

Scan

- Scan Using the Scan Button on Your Brother Machine
- Scan from Your Computer (Windows)
- Scan from Your Computer (Mac)
- Configure Scan Settings Using Web Based Management

Scan Using the Scan Button on Your Brother Machine

- Scan Multi-page Letter or A4 Size Documents
- Scan Photos and Graphics
- Save Scanned Data to a Folder as a PDF File
- Save Scanned Data to a USB Flash Drive
- Scan Multiple Business Cards and Photos (Auto Crop)
- Scan to an Editable Text File Using OCR
- Scan to Email Attachment
- Send Scanned Data to an Email Server
- Scan to FTP
- Scan to Network (Windows)
- Web Services for Scanning on Your Network (Windows Vista SP2 or greater, Windows 7, Windows 8 and Windows 10)
- Change Scan Button Settings from ControlCenter4 (Windows)
- Change Scan Button Settings from ControlCenter2 (Mac)

Scan Multi-page Letter or A4 Size Documents

When scanning a multi-page A4 or letter size document, position the short edge on top for portrait documents and position the long edge on top for landscape documents.

Orientation of the document	Scan result
Long edge first **ADF** 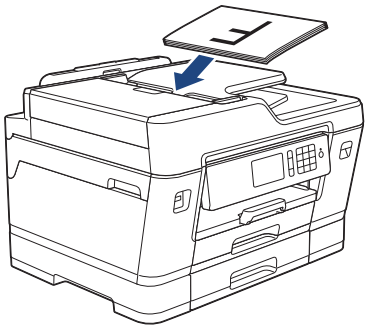 **Scanner glass** 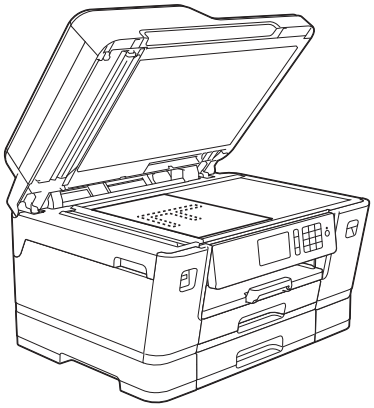	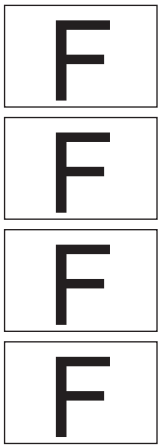
Short edge first **ADF** 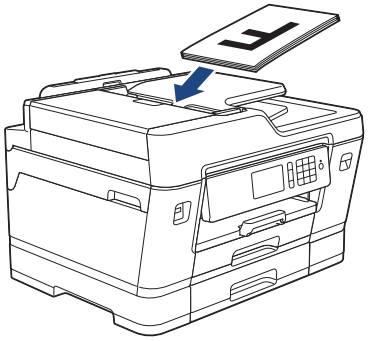 **Scanner glass** 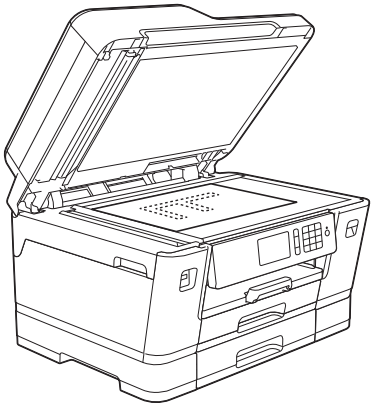	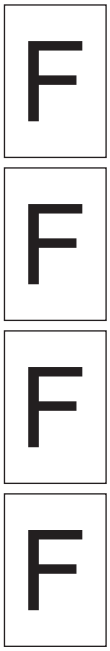

Related Information

- Scan Using the Scan Button on Your Brother Machine

Scan Photos and Graphics

Send scanned photos or graphics directly to your computer.

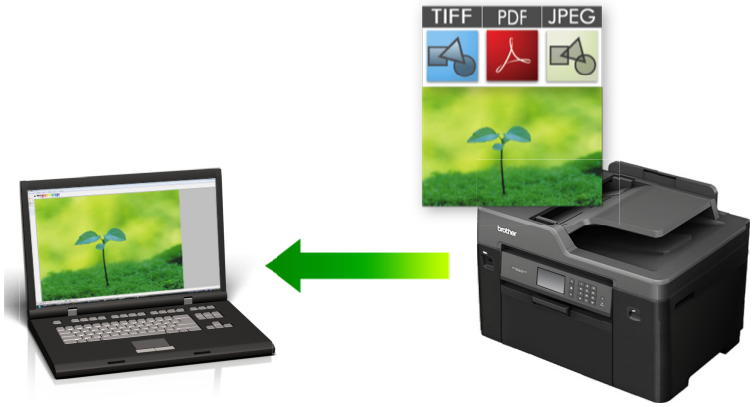

Use the Scan button on the machine to make temporary changes to the scan settings. To make permanent changes, use Brother's ControlCenter software.

>> MFC-J3530DW
>> MFC-J3930DW

MFC-J3530DW

1. Load your document.
2. Press [Scan] > [to PC] > [to Image].
3. If the machine is connected over the network, press ▲ or ▼ to display the computer where you want to send data, and then press the computer name.

If the LCD prompts you to enter a PIN, use the LCD to enter the four-digit PIN for the computer, and then press [OK].

4. Do one of the following:
   - To change the settings, press [Options], and then go to the next step.
   - Press [Start] to start scanning without changing additional settings.

     The machine starts scanning. If using the machine's scanner glass, follow the LCD instructions to complete the scanning job.
5. Press the [Scan Settings] option, and then press [Set at Device].

To use the [Scan Settings] option, a computer with the ControlCenter software installed must be connected to the machine.

6. Select the scan settings you want to change, and then press [OK].

Option	Description
Scan Type	Select the scan type for your document.
Resolution	Select the scan resolution for your document.
File Type	Select the file format for your document.
Document Size	Select your document size.
Brightness	Select the brightness level.

Option	Description
Contrast	Select the contrast level.
ADF Auto Deskew (Available only for certain models)	Correct any skewed documents when they are scanned using the ADF.
Skip Blank Page (Available only for certain models)	When On is selected, blank pages are skipped.
Remove Background Colour	Change the amount of background colour that is removed.

- To save the settings as a shortcut, press [Save as Shortcut]. You will be asked if you want to make this a One Touch Shortcut. Follow the LCD instructions.

7. Press [Start].

   The machine starts scanning. If using the machine's scanner glass, follow the LCD instructions to complete the scanning job.

MFC-J3930DW

1. Load your document.
2. Press [Scan].
3. Swipe left or right or press ◀ or ▶ to display [to PC].

   The icon moves to the middle of the touchscreen and is highlighted in blue.
4. Press [to PC].
5. Press [to Image].
6. If the machine is connected over the network, swipe up or down or press ▲ or ▼ to display the computer where you want to send the data, and then press the computer name.

   If the LCD prompts you to enter a PIN, use the LCD to enter the four-digit PIN for the computer, and then press [OK].
7. Do one of the following:
   - To change the settings, press [Options], and then go to the next step.
   - Press [Start] to start scanning without changing additional settings.

     The machine starts scanning. If using the machine's scanner glass, follow the LCD instructions to complete the scanning job.
8. To scan both sides of the document, press [2-sided Scan], and then select the document type.

Option	Description
2-sided Scan: Long Edge	Scan the document so that the pages are read by flipping them on the long edge. 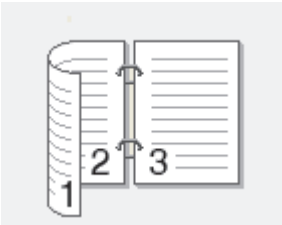
2-sided Scan: Short Edge	Scan the document so that the pages are read by flipping them on the short edge.

Option	Description
	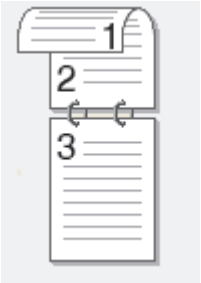

9. Press the [Scan Settings] option, and then press [Set at Device].

To use the [Scan Settings] option, a computer with the ControlCenter software installed must be connected to the machine.

10. Select the scan settings you want to change, and then press [OK].

Option	Description
Scan Type	Select the scan type for your document.
Resolution	Select the scan resolution for your document.
File Type	Select the file format for your document.
Document Size	Select your document size.
Brightness	Select the brightness level.
Contrast	Select the contrast level.
ADF Auto Deskew (Available only for certain models)	Correct any skewed documents when they are scanned using the ADF.
Skip Blank Page (Available only for certain models)	When On is selected, blank pages are skipped.
Remove Background Colour	Change the amount of background colour that is removed.

- To save the settings as a shortcut, press [Save as Shortcut]. You will be asked if you want to make this a One Touch Shortcut. Follow the LCD instructions.

11. Press [Start].

The machine starts scanning. If using the machine's scanner glass, follow the LCD instructions to complete the scanning job.

Related Information

- Scan Using the Scan Button on Your Brother Machine

Save Scanned Data to a Folder as a PDF File

Scan documents and save them to a folder on your computer as PDF files.

Use the Scan button on the machine to make temporary changes to the scan settings. To make permanent changes, use Brother's ControlCenter software.

>> MFC-J3530DW
>> MFC-J3930DW

MFC-J3530DW

1. Load your document.
2. Press [Scan] > [to PC] > [to File].
3. If the machine is connected over the network, press ▲ or ▼ to display the computer where you want to send data, and then press the computer name.

If the LCD prompts you to enter a PIN, use the LCD to enter the four-digit PIN for the computer, and then press [OK].

4. Do one of the following:
   - To change the settings, press [Options], and then go to the next step.
   - Press [Start] to start scanning without changing additional settings.

     The machine starts scanning. If using the machine's scanner glass, follow the LCD instructions to complete the scanning job.
5. Select the scan settings you want to change, and then press [OK].

Option	Description
Scan Type	Select the scan type for your document.
Resolution	Select the scan resolution for your document.
File Type	Select the file format for your document.
Document Size	Select your document size.
Brightness	Select the brightness level.
Contrast	Select the contrast level.
ADF Auto Deskew	Correct any skewed documents when they are scanned using the ADF.

Option	Description
(Available only for certain models)	
Skip Blank Page (Available only for certain models)	When On is selected, blank pages are skipped.
Remove Background Colour	Change the amount of background colour that is removed.

- To save the settings as a shortcut, press [Save as Shortcut]. You will be asked if you want to make this a One Touch Shortcut. Follow the LCD instructions.

6. Press [Start].

   The machine starts scanning. If using the machine's scanner glass, follow the LCD instructions to complete the scanning job.

MFC-J3930DW

1. Load your document.
2. Press [Scan].
3. Swipe left or right or press ◀ or ▶ to display [to PC].

   The icon moves to the middle of the touchscreen and is highlighted in blue.
4. Press [to PC].
5. Press [to File].
6. If the machine is connected over the network, swipe up or down or press ▲ or ▼ to display the computer where you want to send the data, and then press the computer name.

If the LCD prompts you to enter a PIN, use the LCD to enter the four-digit PIN for the computer, and then press [OK].

7. Do one of the following:
   - To change the settings, press [Options], and then go to the next step.
   - Press [Start] to start scanning without changing additional settings.

     The machine starts scanning. If using the machine's scanner glass, follow the LCD instructions to complete the scanning job.
8. To scan both sides of the document, press [2-sided Scan], and then select the document type.

Option	Description
2-sided Scan: Long Edge	Scan the document so that the pages are read by flipping them on the long edge. 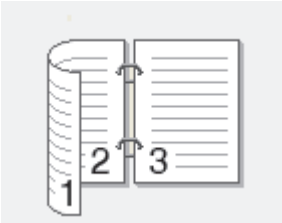
2-sided Scan: Short Edge	Scan the document so that the pages are read by flipping them on the short edge.

Option	Description
	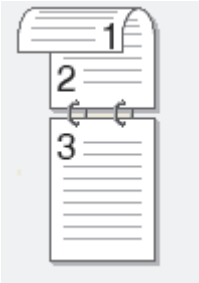

9. Select the scan settings you want to change, and then press [OK].

Option	Description
Scan Type	Select the scan type for your document.
Resolution	Select the scan resolution for your document.
File Type	Select the file format for your document.
Document Size	Select your document size.
Brightness	Select the brightness level.
Contrast	Select the contrast level.
ADF Auto Deskew (Available only for certain models)	Correct any skewed documents when they are scanned using the ADF.
Skip Blank Page (Available only for certain models)	When On is selected, blank pages are skipped.
Remove Background Colour	Change the amount of background colour that is removed.

- To save the settings as a shortcut, press [Save as Shortcut]. You will be asked if you want to make this a One Touch Shortcut. Follow the LCD instructions.

10. Press [Start].

The machine starts scanning. If using the machine's scanner glass, follow the LCD instructions to complete the scanning job.

Related Information

- Scan Using the Scan Button on Your Brother Machine

Save Scanned Data to a USB Flash Drive

Scan documents and save them directly to a USB flash drive without using a computer.

>> MFC-J3530DW
>> MFC-J3930DW

MFC-J3530DW

1. Load your document.
2. Insert a USB flash drive into your machine.

   The LCD screen automatically changes.
3. Press [Scan to Media].
4. Do one of the following:
   - To change the settings, press [Options], and then go to the next step.

     - To set your own default settings: after making changes to settings, press the [Set New Default] option, and then press [Yes].
     - To restore the factory settings: press the [Factory Reset] option, and then press [Yes].
   - Press [Start] to start scanning without changing additional settings.

     The machine starts scanning. If using the machine's scanner glass, follow the LCD instructions to complete the scanning job.
5. Select the scan settings you want to change, and then press [OK].

Option	Description
Scan Type	Select the scan type for your document.
Resolution	Select the scan resolution for your document.
File Type	Select the file format for your document.
Document Size	Select your document size.
Scan Long Paper (ADF) (Available only for certain models)	Scan a long document using the ADF.
File Name	Rename the file.
File Name Style	Select the order in which the date, counter number, and other items appear in the file names.
Brightness	Select the brightness level.
Contrast	Select the contrast level.
Auto Crop (Available only for certain models)	Scan multiple documents placed on the scanner glass to a USB flash drive. The machine will scan each document and create separate files or a single multi-page file.
ADF Auto Deskew (Available only for certain models)	Correct any skewed documents when they are scanned using the ADF.
Skip Blank Page (Available only for certain models)	When On is selected, blank pages are skipped.

Option	Description
Skip Blank Page Sensitivity (Available only for certain models)	Select the sensitivity level for detecting blank pages in the scanned data. The higher the sensitivity, the easier it is for the machine to detect blank pages.
Remove Background Colour	Change the amount of background colour that is removed.

- To save the settings as a shortcut, press [Save as Shortcut]. You will be asked if you want to make this a One Touch Shortcut. Follow the LCD instructions.

6. Press [Start].
7. If you are using the scanner glass, set the next page and then press [Continue]. If there are no more pages to scan, press [Finish]. After you finish scanning, make sure you choose [Finish] before removing the USB flash drive from the machine.

IMPORTANT

The LCD displays a message while reading the data. DO NOT unplug the power cord or remove the USB flash drive from the machine while it is reading the data. You could lose your data or damage the USB flash drive.

MFC-J3930DW

1. Load your document.
2. Insert a USB Flash memory drive into your machine.

   The LCD automatically changes.
3. Press [Scan to Media].
4. Do one of the following:
   - To change the settings, press [Options], and then go to the next step.

     - To set your own default settings: after making changes to settings, press the [Set New Default] option, and then press [Yes].
     - To restore the factory settings: press [Factory Reset], and then press [Yes].
   - Press [Start] to start scanning without changing additional settings.

     The machine starts scanning. If using the machine's scanner glass, follow the LCD instructions to complete the scanning job.
5. To scan both sides of the document (for MFC-J3930DW only), press [2-sided Scan], and then select the document type.
6. Select the scan settings you want to change, and then press [OK].

Option	Description
2-sided Scan (Available only for certain models)	Select the 2-sided scan mode.
Scan Type	Select the scan type for your document.
Resolution	Select the scan resolution for your document.
File Type	Select the file format for your document.
Document Size	Select your document size.
Scan Long Paper (ADF)	Scan a long document using the ADF.

Option	Description
(Available only for certain models)	
File Name	Rename the file.
File Name Style	Select the order in which the date, counter number, and other items appear in the file names.
Brightness	Select the brightness level.
Contrast	Select the contrast level.
Auto Crop (Available only for certain models)	Scan multiple documents placed on the scanner glass to a USB flash drive. The machine will scan each document and create separate files or a single multi-page file.
ADF Auto Deskew (Available only for certain models)	Correct any skewed documents when they are scanned using the ADF.
Skip Blank Page (Available only for certain models)	When On is selected, blank pages are skipped.
Skip Blank Page Sensitivity (Available only for certain models)	Select the sensitivity level for detecting blank pages in the scanned data. The higher the sensitivity, the easier it is for the machine to detect blank pages.
Remove Background Colour	Change the amount of background colour that is removed.

- To save the settings as a shortcut, press [Save as Shortcut]. You will be asked if you want to make this a One Touch Shortcut. Follow the LCD instructions.

7. Press [Start].
8. If you are using the scanner glass, set the next page and then press [Continue]. If there are no more pages to scan, press [Finish]. After you finish scanning, make sure you choose [Finish] before removing the USB flash drive from the machine.

IMPORTANT

The LCD displays a message while reading the data. DO NOT unplug the power cord or remove the USB flash drive from the machine while it is reading the data. You could lose your data or damage the USB flash drive.

Related Information

- Scan Using the Scan Button on Your Brother Machine
- Compatible USB Flash Drives

Compatible USB Flash Drives

IMPORTANT

The USB direct interface supports only USB flash drives and digital cameras that use the USB mass storage standard. Other USB devices are not supported.

Compatible Memory Cards		Slot
USB flash drive		USB slot 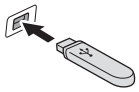

Compatible USB Flash Drives	
USB Class	USB Mass Storage Class
USB Mass Storage Sub Class	SCSI or SFF-8070i
Transfer protocol	Bulk transfer Only
Format [1]	FAT12/FAT16/FAT32/exFAT
Sector size	Max. 4096 Byte
Encryption	Encrypted devices are not supported.

[1] NTFS format is not supported.

Related Information

- Print Data Directly from a USB Flash Drive
- Save Scanned Data to a USB Flash Drive

Scan Multiple Business Cards and Photos (Auto Crop)

You can scan multiple documents placed on the scanner glass. The machine will scan each document and use the Auto Crop feature to create separate files or a single multi-page file.

Guidelines for Auto Crop

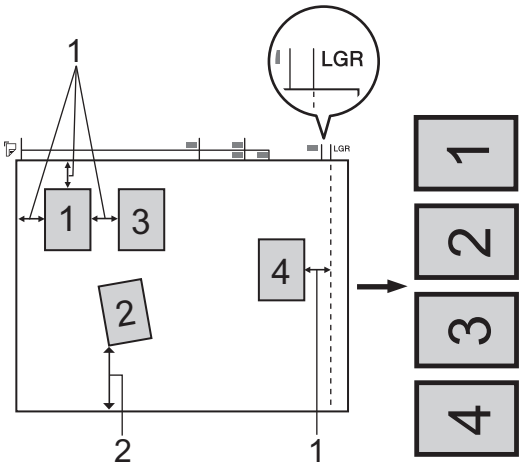

1. 10 mm or greater
2. 20 mm or greater (bottom)

- This setting is available only for documents that are rectangular or square.
- If your document is too long or wide, this feature will not work as described here.
- You must place the documents away from the edges of the scanner glass as shown in the illustration.
- You must place the documents at least 10 mm away from each other.
- Auto Crop adjusts the skew of the document on the scanner glass; however, if your document is skewed more than 10 degrees, this feature will not work.
- The ADF must be empty to use Auto Crop.
- The Auto Crop feature is available for a maximum of 32 documents, depending on the size of the documents.

>> MFC-J3530DW
>> MFC-J3930DW

MFC-J3530DW

1. Load documents on the scanner glass.

- To scan documents using the Auto Crop feature, you must put the documents on the scanner glass.
- The Auto Crop feature is supported by technology from Reallusion, Inc.

2. Insert a USB flash drive into your machine.

   The LCD screen automatically changes.
3. Press [Scan to Media] > [Options] > [Auto Crop].
4. Press [On].
5. Press [OK].
6. Press [Start].

   The machine starts scanning. Follow the LCD instructions to complete the scanning job.

MFC-J3930DW

1. Load documents on the scanner glass.

- To scan documents using the Auto Crop feature, you need to put the documents on the scanner glass.
- The Auto Crop feature is supported by technology from Reallusion, Inc.

2. Insert a USB Flash memory drive into your machine.
   The LCD automatically changes.
3. Press [Scan to Media] > [Options] > [Auto Crop].
4. Press [On].
5. Press [OK].
6. Press [Start].
   The machine starts scanning. Follow the LCD instructions to complete the scanning job.

Related Information

- Scan Using the Scan Button on Your Brother Machine

Scan to an Editable Text File Using OCR

Your machine can convert characters in a scanned document to text using optical character recognition (OCR) technology. You can edit this text using your preferred text-editing application.

- The Scan to OCR feature is available for certain languages.
- Use the Scan button on the machine to make temporary changes to the scan settings. To make permanent changes, use Brother's ControlCenter software.

>> MFC-J3530DW
>> MFC-J3930DW

MFC-J3530DW

1. Load your document.
2. Press [Scan] > [to PC] > [to OCR].
3. If the machine is connected over the network, press ▲ or ▼ to display the computer where you want to send data, and then press the computer name.

If the LCD prompts you to enter a PIN, use the LCD to enter the four-digit PIN for the computer, and then press [OK].

4. Do one of the following:
   - To change the settings, press [Options], and then go to the next step.
   - Press [Start] to start scanning without changing additional settings.

     The machine starts scanning. If using the machine's scanner glass, follow the LCD instructions to complete the scanning job.
5. Press the [Scan Settings] option, and then press [Set at Device].

To use the [Scan Settings] option, a computer with the ControlCenter software installed must be connected to the machine.

6. Select the scan settings you want to change, and then press [OK].

Option	Description
Scan Type	Select the scan type for your document.
Resolution	Select the scan resolution for your document.
File Type	Select the file format for your document.

Option	Description
Document Size	Select your document size.
Brightness	Select the brightness level.
Contrast	Select the contrast level.
ADF Auto Deskew (Available only for certain models)	Correct any skewed documents when they are scanned using the ADF.
Skip Blank Page (Available only for certain models)	When On is selected, blank pages are skipped.
Remove Background Colour	Change the amount of background colour that is removed.

- To save the settings as a shortcut, press [Save as Shortcut]. You will be asked if you want to make this a One Touch Shortcut. Follow the LCD instructions.

7. Press [Start].

   The machine starts scanning. If using the machine's scanner glass, follow the LCD instructions to complete the scanning job.

MFC-J3930DW

1. Load your document.
2. Press [Scan].
3. Swipe left or right or press ◀ or ▶ to display [to PC].

   The icon moves to the middle of the touchscreen and is highlighted in blue.
4. Press [to PC].
5. Press [to OCR].
6. If the machine is connected over the network, swipe up or down or press ▲ or ▼ to display the computer where you want to send the data, and then press the computer name.

   If the LCD prompts you to enter a PIN, use the LCD to enter the four-digit PIN for the computer, and then press [OK].
7. Do one of the following:
   - To change the settings, press [Options], and then go to the next step.
   - Press [Start] to start scanning without changing additional settings.

     The machine starts scanning. If using the machine's scanner glass, follow the LCD instructions to complete the scanning job.
8. To scan both sides of the document, press [2-sided Scan], and then select the document type.

Option	Description
2-sided Scan: Long Edge	Scan the document so that the pages are read by flipping them on the long edge.

Option	Description
2-sided Scan: Short Edge	Scan the document so that the pages are read by flipping them on the short edge. 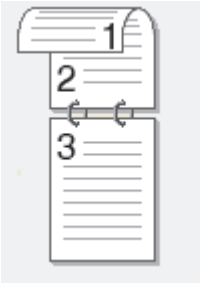

9. Press the [Scan Settings] option, and then press [Set at Device].

To use the [Scan Settings] option, a computer with the ControlCenter software installed must be connected to the machine.

10. Select the scan settings you want to change, and then press [OK].

Option	Description
Scan Type	Select the scan type for your document.
Resolution	Select the scan resolution for your document.
File Type	Select the file format for your document.
Document Size	Select your document size.
Brightness	Select the brightness level.
Contrast	Select the contrast level.
ADF Auto Deskew (Available only for certain models)	Correct any skewed documents when they are scanned using the ADF.
Skip Blank Page (Available only for certain models)	When On is selected, blank pages are skipped.
Remove Background Colour	Change the amount of background colour that is removed.

- To save the settings as a shortcut, press [Save as Shortcut]. You will be asked if you want to make this a One Touch Shortcut. Follow the LCD instructions.

11. Press [Start].

The machine starts scanning. If using the machine's scanner glass, follow the LCD instructions to complete the scanning job.

Related Information

- Scan Using the Scan Button on Your Brother Machine

Scan to Email Attachment

Send a scanned document as an email attachment.

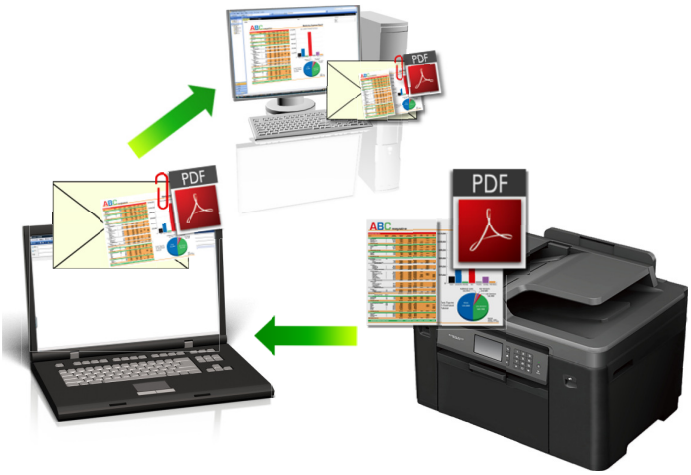

- Use the Scan button on the machine to make temporary changes to the scan settings. To make permanent changes, use Brother's ControlCenter software.
- The Scan to Email feature does not support Webmail services. Use the Scan to Image or Scan to File feature to scan a document or a picture, and then attach the scanned file to an email message.

>> MFC-J3530DW
>> MFC-J3930DW

MFC-J3530DW

1. Load your document.
2. Press [Scan] > [to PC] > [to E-mail].
3. If the machine is connected over the network, press ▲ or ▼ to display the computer where you want to send data, and then press the computer name.

If the LCD prompts you to enter a PIN, use the LCD to enter the four-digit PIN for the computer, and then press [OK].

4. Do one of the following:
   - To change the settings, press [Options], and then go to the next step.
   - Press [Start] to start scanning without changing additional settings.

     The machine scans the document and saves it as a file attachment. It then launches your email application and opens a new, blank email message with the scanned file attached.
5. Press the [Scan Settings] option, and then press [Set at Device].

To use the [Scan Settings] option, a computer with the ControlCenter software installed must be connected to the machine.

6. Select the scan settings you want to change, and then press [OK].

Option	Description
Scan Type	Select the scan type for your document.
Resolution	Select the scan resolution for your document.

Option	Description
File Type	Select the file format for your document.
Document Size	Select your document size.
Brightness	Select the brightness level.
Contrast	Select the contrast level.
ADF Auto Deskew (Available only for certain models)	Correct any skewed documents when they are scanned using the ADF.
Skip Blank Page (Available only for certain models)	When On is selected, blank pages are skipped.
Remove Background Colour	Change the amount of background colour that is removed.

- To save the settings as a shortcut, press [Save as Shortcut]. You will be asked if you want to make this a One Touch Shortcut. Follow the LCD instructions.

7. Press [Start].

   The machine scans the document and saves it as a file attachment. It then launches your email application and opens a new, blank email message with the scanned file attached.

MFC-J3930DW

1. Load your document.
2. Press [Scan].
3. Swipe left or right or press ◀ or ▶ to display [to PC].

   The icon moves to the middle of the touchscreen and is highlighted in blue.
4. Press [to PC].
5. Press [to E-mail].
6. If the machine is connected over the network, swipe up or down or press ▲ or ▼ to display the computer where you want to send the data, and then press the computer name.

   If the LCD prompts you to enter a PIN, use the LCD to enter the four-digit PIN for the computer, and then press [OK].
7. Do one of the following:
   - To change the settings, press [Options], and then go to the next step.
   - Press [Start] to start scanning without changing additional settings.

     The machine scans the document and saves it as a file attachment. It then launches your email application and opens a new, blank email message with the scanned file attached.
8. To scan both sides of the document, press [2-sided Scan], and then select the document type.

Option	Description
2-sided Scan: Long Edge	Scan the document so that the pages are read by flipping them on the long edge.

Option	Description
	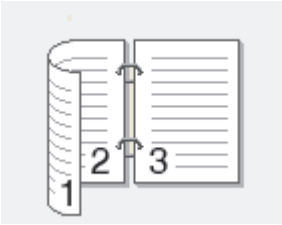
2-sided Scan: Short Edge	Scan the document so that the pages are read by flipping them on the short edge. 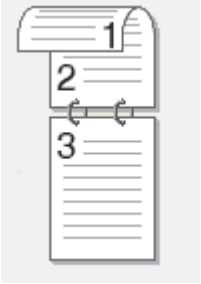

9. Press the [Scan Settings] option, and then press [Set at Device].

To use the [Scan Settings] option, a computer with the ControlCenter software installed must be connected to the machine.

10. Select the scan settings you want to change, and then press [OK].

Option	Description
Scan Type	Select the scan type for your document.
Resolution	Select the scan resolution for your document.
File Type	Select the file format for your document.
Document Size	Select your document size.
Brightness	Select the brightness level.
Contrast	Select the contrast level.
ADF Auto Deskew (Available only for certain models)	Correct any skewed documents when they are scanned using the ADF.
Skip Blank Page (Available only for certain models)	When On is selected, blank pages are skipped.
Remove Background Colour	Change the amount of background colour that is removed.

- To save the settings as a shortcut, press [Save as Shortcut]. You will be asked if you want to make this a One Touch Shortcut. Follow the LCD instructions.

11. Press [Start].

The machine scans the document and saves it as a file attachment. It then launches your email application and opens a new, blank email message with the scanned file attached.

Related Information

- Scan Using the Scan Button on Your Brother Machine

Send Scanned Data to an Email Server

Send scanned data from your Brother machine directly to your email server for delivery to an email recipient without using a computer.

- To use this feature, go to the Brother Solutions Center at support.brother.com, click **Downloads** on your model page and download the Internet Fax Install Tool.
- To send scanned data to an email server, you must configure your machine to communicate with your network and mail server. You can configure these items from the machine's control panel, Web Based Management, Remote Setup, or BRAdmin Professional.

>> MFC-J3530DW
>> MFC-J3930DW

MFC-J3530DW

1. Load your document.
2. Press [Scan] > [to E-mail Server].
3. Do one of the following to enter the destination email address:
   - To enter the email address manually, press [Manual], and then enter the email address using the character buttons on the LCD. When finished, press [OK].
   - If the email address is stored in the machine's address book, press [Address Book], and then select the email address.

     Press [OK].
4. Confirm the email address, and then press [Next].
5. Do one of the following:
   - To change the settings, press [Options], and then go to the next step.

     - To set your own default settings: after making changes to settings, press the [Set New Default] option, and then press [Yes].
     - To restore the factory settings: press the [Factory Reset] option, and then press [Yes].
   - Press [Start] to start scanning without changing additional settings.

     The machine starts scanning. If using the machine's scanner glass, follow the LCD instructions to complete the scanning job.
6. Select the scan settings you want to change, and then press [OK].

Option	Description
Scan Type	Select the scan type for your document.
Resolution	Select the scan resolution for your document.
File Type	Select the file format for your document.
Document Size	Select your document size.
Scan Long Paper (ADF) (Available only for certain models)	Scan a long document using the ADF.
Brightness	Select the brightness level.
Contrast	Select the contrast level.

- To save the settings as a shortcut, press [Save as Shortcut]. You will be asked if you want to make this a One Touch Shortcut. Follow the LCD instructions.

7. Press [Start].

   The machine starts scanning. If using the machine's scanner glass, follow the LCD instructions to complete the scanning job.

MFC-J3930DW

1. Load your document.
2. Press [Scan].
3. Swipe left or right to display [to E-mail Server], and press it.

   The icon moves to the middle of the touchscreen and is highlighted in blue.
4. Press [to E-mail Server].
5. Do one of the following to enter the destination email address:
   - To enter the email address manually, press [Manual], and then enter the email address using the character buttons on the LCD. When finished, press [OK].
   - If the email address is stored in the machine's address book, press [Address Book], and then select the email address.

     Press [OK].
6. Confirm the email address, and then press [Next].
7. Do one of the following:
   - To change the settings, press [Options], and then go to the next step.

     - To set your own default settings: after making changes to settings, press the [Set New Default] option, and then press [Yes].
     - To restore the factory settings: press [Factory Reset], and then press [Yes].
   - Press [Start] to start scanning without changing additional settings.

     The machine starts scanning. If using the machine's scanner glass, follow the LCD instructions to complete the scanning job.
8. Select the scan settings you want to change, and then press [OK].

Option	Description
2-sided Scan (Available only for certain models)	Select the 2-sided scan mode.
Scan Type	Select the scan type for your document.
Resolution	Select the scan resolution for your document.
File Type	Select the file format for your document.
Document Size	Select your document size.
Scan Long Paper (ADF) (Available only for certain models)	Scan a long document using the ADF.
Brightness	Select the brightness level.
Contrast	Select the contrast level.

- To save the settings as a shortcut, press [Save as Shortcut]. You will be asked if you want to make this a One Touch Shortcut. Follow the LCD instructions.

9. Press [Start].

   The machine starts scanning. If using the machine's scanner glass, follow the LCD instructions to complete the scanning job.

Related Information

- Scan Using the Scan Button on Your Brother Machine

Scan to FTP

Scan documents directly to an FTP server when you need to share the scanned information. For added convenience, configure different profiles to save your favourite Scan to FTP destinations.

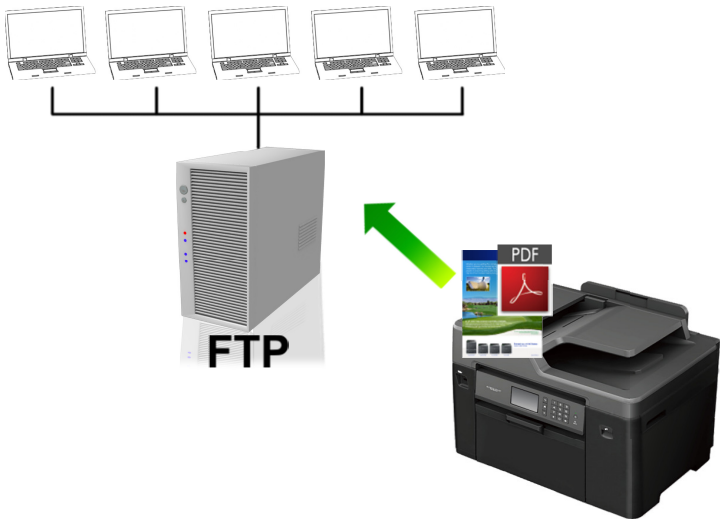

- Set up a Scan to FTP Profile
- Upload Scanned Data to an FTP Server

Set up a Scan to FTP Profile

Set up a Scan to FTP Profile to scan and upload the scanned data directly to an FTP location.

We recommend Microsoft Internet Explorer 8/11 and Microsoft Edge for Windows, and Safari 9 for Mac. Please also make sure that JavaScript and Cookies are always enabled in whichever browser you use. If a different web browser is used, make sure it is compatible with HTTP 1.0 and HTTP 1.1.

1. Start your web browser.

   Type "http://machine's IP address" in your browser's address bar (where "machine's IP address" is the IP address of the machine or the print server name). For example: http://192.168.1.2

   No password is required by default. If you have previously set a password, type it, and then click .
2. Click the **Scan** tab.
3. Click the **Scan to FTP/Network** menu in the left navigation bar.
4. Select the **FTP** option, and then click **Submit**.

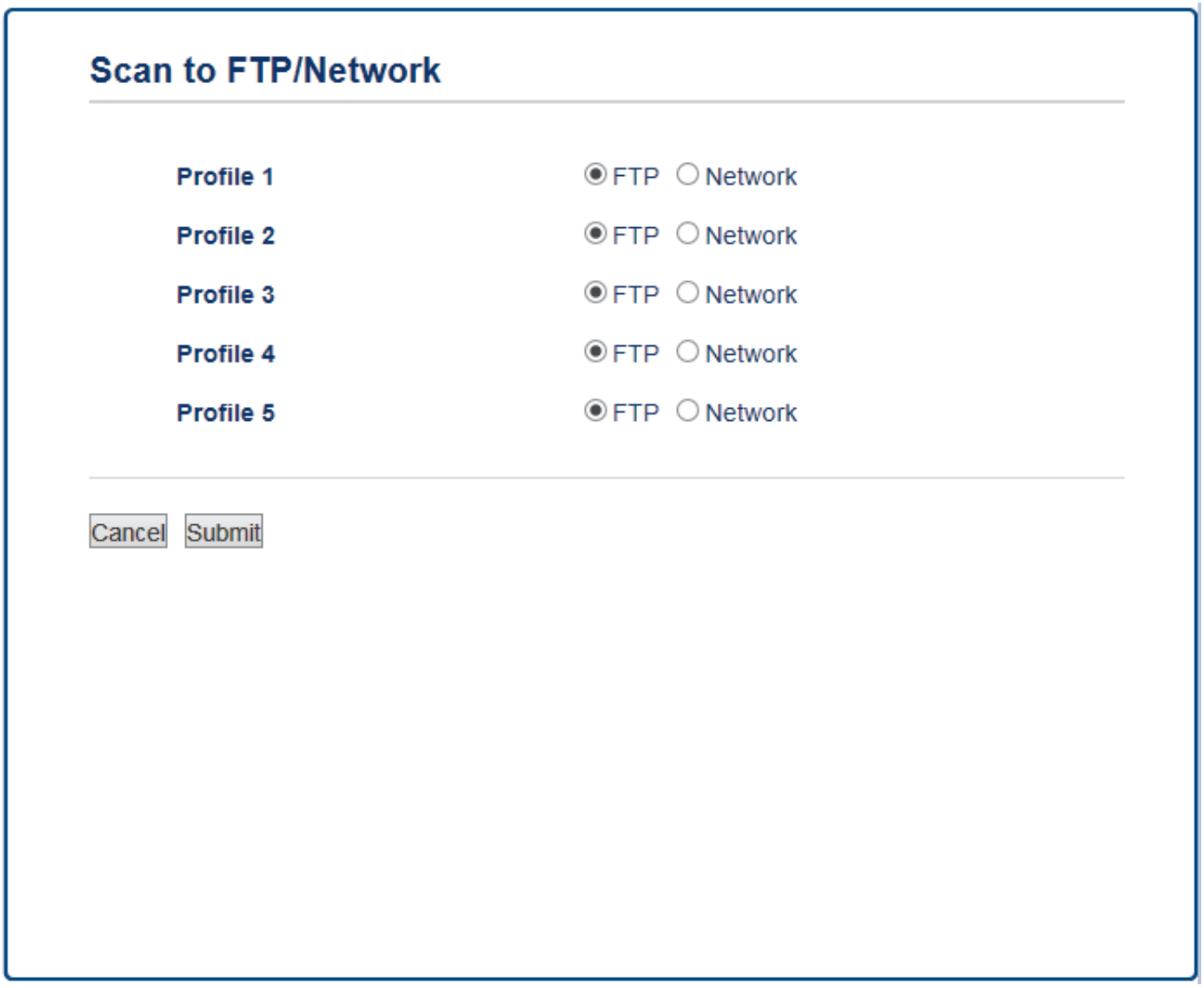

5. Click the **Scan to FTP/Network Profile** menu in the left navigation bar.
6. Select the profile you want to set up or change.
7. In the **Profile Name** field, type a name for this server profile (up to 15 alphanumeric characters). The machine will display this name on the LCD.
8. In the **Host Address** field, type the Host Address (for example: ftp.example.com; up to 64 characters) or the IP address (for example: 192.23.56.189).

9. Change the **Port Number** setting used to access the FTP server. The default for this setting is port 21. In most cases this setting does not need to be changed.
10. In the **Username** field, type a user name (up to 32 characters) that has permission to write data to the FTP server.
11. In the **Password** field, type the password (up to 32 characters) associated with the user name you entered in the **Username** field. Type the password again in the **Retype password** field.
12. To scan securely using SSL/TLS communication, set the **SSL/TLS** option. Change the **CA Certificate** setting, if needed.
13. In the **Store Directory** field, type the path (up to 60 characters) to the folder on the FTP server where you want to send your scanned data. Do not type a slash mark at the beginning of the path (see example).

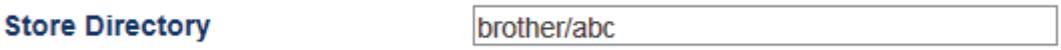

14. Click the **File Name** drop-down list, and then select a file name from the preset names provided, or from user-defined names. You can set the user-defined names and file name style in the **Scan File Name** menu in the left navigation bar.
15. Click the **Quality** drop-down list, and then select a quality setting. If you choose the **User Select** option, the machine will prompt users to select a setting each time they use the scan profile.
16. Click the **File Type** drop-down list, and then select the file type you want to use for the scanned document. If you choose the **User Select** option, the machine will prompt users to select a setting each time they use the scan profile.
17. Click the **Document Size** drop-down list, and then select your document size from the list. This is necessary to make sure the scanned file is the correct size.
18. If you want to scan a document printed on long paper using the ADF, select the **On** option from the **Scan Long Paper (ADF)** option. (Available only for certain models)
19. Select **Auto** from the **ADF Auto Deskew** option, to set the machine to correct document skewing automatically as the pages are scanned from the ADF. (Available only for certain models)
20. If you want to remove blank pages of the document from the scanning results, select the **On** option from the **Skip Blank Page** option. (Available only for certain models)
21. Click the **Remove Background Color** drop-down list, and then select the level from the list. You can use this feature to remove the background colour of documents to make the scanned data more legible.
22. Set the **Passive Mode** option to off or on depending on your FTP server and network firewall configuration. The default setting is on. In most cases this setting does not need to be changed.
23. Click **Submit**.

Using the following characters: ?, /, \, ", :, <, >, | or * may cause a sending error.

Related Information

- Scan to FTP

Upload Scanned Data to an FTP Server

>> MFC-J3530DW
>> MFC-J3930DW

MFC-J3530DW

1. Load your document.
2. Press [Scan] > [to FTP].
3. Press ▲ or ▼ to select one of the FTP server profiles listed.
4. Do one of the following:
   - To change the settings, press [Options], and then go to the next step.
   - If the profile is not complete (for example, if the logon account name and password are missing or if the quality or file type is not specified), you will be prompted to enter any missing information.

     When you finish the settings, press [Start].
   - If the profile is complete, press [Start].

   After you press [Start], the LCD shows the message [Connecting]. When the connection to the FTP server is successful, the machine starts scanning. If you are using the scanner glass, set the next page and then press [Continue]. If there are no more pages to scan, press [Finish].
5. Select the scan settings you want to change, and then press [OK].

Option	Description
Scan Type	Select the scan type for your document.
Resolution	Select the scan resolution for your document.
File Type	Select the file format for your document.
Document Size	Select your document size.
Scan Long Paper (ADF) (Available only for certain models)	Scan a long document using the ADF.
File Name	Rename the file.
File Name Style	Select the order in which the date, counter number, and other items appear in the file names.
Brightness	Select the brightness level.
Contrast	Select the contrast level.
ADF Auto Deskew (Available only for certain models)	Correct any skewed documents when they are scanned using the ADF.
Skip Blank Page (Available only for certain models)	When On is selected, blank pages are skipped.
Skip Blank Page Sensitivity (Available only for certain models)	Select the sensitivity level for detecting blank pages in the scanned data. The higher the sensitivity, the easier it is for the machine to detect blank pages.
Remove Background Colour	Change the amount of background colour that is removed.
User Name	Enter the user name.

- To save the profile as a shortcut, press [Save as Shortcut]. You will be asked if you want to make this a One Touch Shortcut. Follow the LCD instructions.

6. Press [Start] to start scanning.

   The LCD shows the message [Connecting]. When the connection to the FTP server is successful, the machine starts scanning. If you are using the scanner glass, set the next page and then press [Continue]. If there are no more pages to scan, press [Finish].

MFC-J3930DW

1. Load your document.
2. Press [Scan].
3. Swipe left or right to display [to FTP], and press it.

   The icon moves to the middle of the touchscreen and is highlighted in blue.
4. Press [to FTP].
5. Swipe up or down or press ▲ or ▼ to select one of the FTP server profiles listed.
6. Do one of the following:
   - To change the settings, press [Options], and then go to the next step.
   - If the profile is not complete (for example, if the logon account name and password are missing or if the quality or file type is not specified), you will be prompted to enter any missing information.

     When you finish the settings, press [Start].
   - If the profile is complete, press [Start].

   After you press [Start], the LCD shows the message [Connecting]. When the connection to the FTP server is successful, the machine starts scanning. If you are using the scanner glass, set the next page and then press [Continue]. If there are no more pages to scan, press [Finish].
7. Select the scan settings you want to change, and then press [OK].

Option	Description
2-sided Scan (Available only for certain models)	Select the 2-sided scan mode.
Scan Type	Select the scan type for your document.
Resolution	Select the scan resolution for your document.
File Type	Select the file format for your document.
Document Size	Select your document size.
Scan Long Paper (ADF) (Available only for certain models)	Scan a long document using the ADF.
File Name	Rename the file.
File Name Style	Select the order in which the date, counter number, and other items appear in the file names.
Brightness	Select the brightness level.
Contrast	Select the contrast level.
ADF Auto Deskew (Available only for certain models)	Correct any skewed documents when they are scanned using the ADF.
Skip Blank Page	When On is selected, blank pages are skipped.

Option	Description
(Available only for certain models)	
`Skip Blank Page Sensitivity` (Available only for certain models)	Select the sensitivity level for detecting blank pages in the scanned data. The higher the sensitivity, the easier it is for the machine to detect blank pages.
`Remove Background Colour`	Change the amount of background colour that is removed.
`User Name`	Enter the user name.

- To save the profile as a shortcut, press `[Save as Shortcut]`. You will be asked if you want to make this a One Touch Shortcut. Follow the LCD instructions.

8. Press `[Start]` to start scanning.

   The LCD shows the message `[Connecting]`. When the connection to the FTP server is successful, the machine starts scanning. If you are using the scanner glass, set the next page and then press `[Continue]`. If there are no more pages to scan, press `[Finish]`.

Related Information

- Scan to FTP

Scan to Network (Windows)

Scan documents directly to a CIFS server on your local network. For added convenience, you can configure different profiles to save your favourite Scan to Network destinations.

- Set up a Scan to Network Profile
- Upload Scanned Data to a CIFS Server

Set up a Scan to Network Profile

Set up a Scan to Network Profile to scan and upload scanned data directly to a folder on a CIFS server.

- We recommend Microsoft Internet Explorer 8/11 and Microsoft Edge for Windows. Make sure JavaScript and Cookies are always enabled in whichever browser you use. If a different web browser is used, make sure it is compatible with HTTP 1.0 and HTTP 1.1.

1. Start your web browser.

   Type "http://machine's IP address" in your browser's address bar (where "machine's IP address" is the IP address of the machine or the print server name). For example: http://192.168.1.2

   No password is required by default. If you have previously set a password, type it, and then click .
2. Click the **Scan** tab.
3. Click the **Scan to FTP/Network** menu in the left navigation bar.
4. Select the **Network** option, and then click **Submit**.

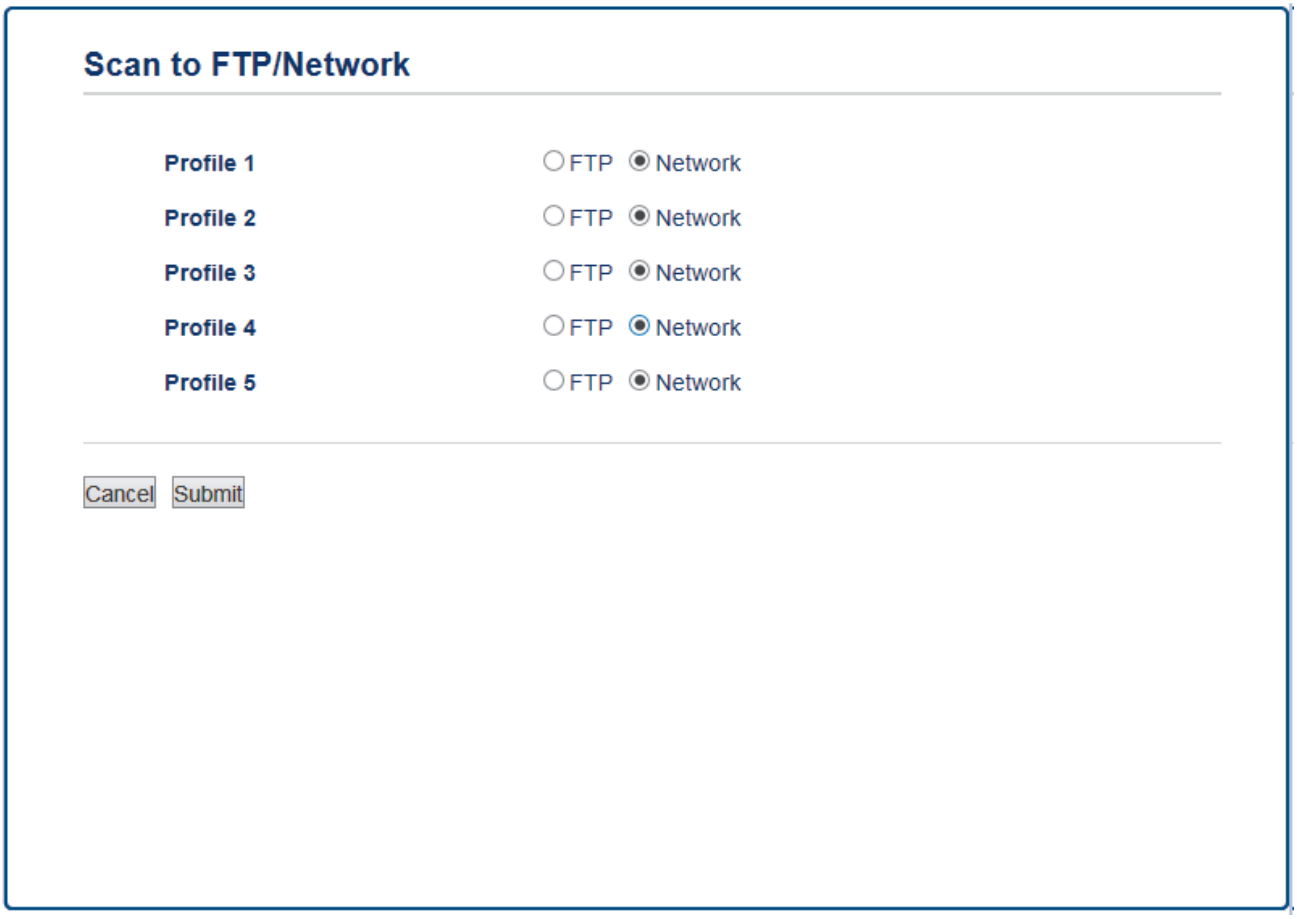

5. Click the **Scan to FTP/Network Profile** menu in the left navigation bar.
6. Select the profile you want to set up or change.
7. In the **Profile Name** field, type a name for this server profile (up to 15 alphanumeric characters). The machine will display this name on the LCD.
8. In the **Network Folder Path** field, type the path to the folder on the CIFS server where you want to send your scanned data.
9. Click the **File Name** drop-down list, and then select a file name from the preset names provided, or from user-defined names. You can set the user-defined names and file name style in the **Scan File Name** menu in the left navigation bar.
10. Click the **Quality** drop-down list, and then select a quality setting. If you choose the **User Select** option, the machine will prompt users to select a setting each time they use the scan profile.

11. Click the **File Type** drop-down list, and then select the file type you want to use for the scanned document. If you choose the **User Select** option, the machine will prompt users to select a setting each time they use the scan profile.
12. Click the **Document Size** drop-down list, and then select your document size from the list. This is necessary to make sure the scanned file is the correct size.
13. If you want to scan a document printed on long paper using the ADF, select the **On** option from the **Scan Long Paper (ADF)** option. (Available only for certain models)
14. Select **Auto** from the **ADF Auto Deskew** option, to set the machine to correct document skewing automatically as the pages are scanned from the ADF. (Available only for certain models)
15. If you want to remove blank pages of the document from the scanning results, select the **On** option from the **Skip Blank Page** option. (Available only for certain models)
16. Click the **Remove Background Color** drop-down list, and then select the level from the list. You can use this feature to remove the background colour of documents to make the scanned data more legible.
17. To PIN-protect this profile, in the **Use PIN for Authentication** field, select **On**.
18. If you selected **On** for the **Use PIN for Authentication** field, type a four-digit PIN in the **PIN Code** field.
19. To set your authentication method, select the authentication method you want from the **Auth. Method** option.
20. In the **Username** field, type a user name (up to 96 characters) that has permission to write data to the folder specified in the **Network Folder Path** field. If the user name is part of a domain, type the user name in one of the following styles:

    user@domain

    domain\user
21. In the **Password** field, type the password (up to 32 characters) associated with the user name you entered in the **Username** field. Type the password again in the **Retype password** field.
22. To set the Kerberos Server Address manually, in the **Kerberos Server Address** field, type the Kerberos Server Address (for example: kerberos.example.com; up to 64 characters).
23. Click **Submit**.

Using the following characters: ?, /, \, ", :, <, >, | or * may cause a sending error.

24. You must configure the SNTP (network time server) or you must set the date, time and time zone correctly on the control panel. The time must match the time used by the Kerberos Server and CIFS Server.

Related Information

- Scan to Network (Windows)
- Set the Date and Time Using Web Based Management

Set the Date and Time Using Web Based Management

Make sure the date and time and the time zone settings are set correctly using Web Based Management or the control panel, so the machine's time matches the time being used by the server providing authentication.

Start with Step 2 if you already have a Web Based Management window open.

1. Start your web browser.

   Type "http://machine's IP address" in your browser's address bar (where "machine's IP address" is the IP address of the machine or the print server name). For example: http://192.168.1.2

   No password is required by default. If you have previously set a password, type it, and then click .
2. Click the **Administrator** tab.
3. Click the **Date&Time** menu in the left navigation bar.

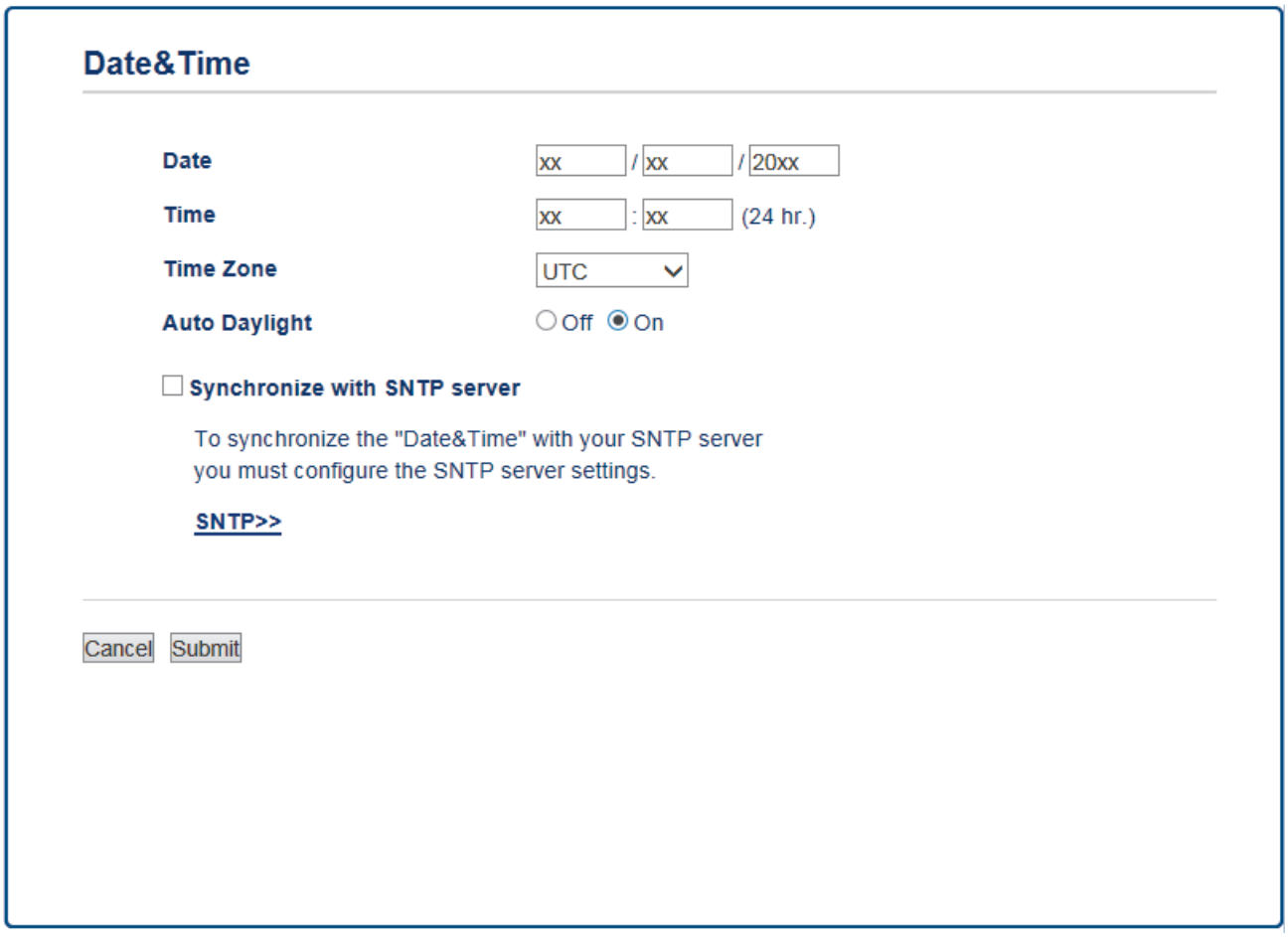

4. In the **Date** fields, enter the date.
5. Select either 12h Clock or 24h Clock as your **Clock Type** (available only for certain countries).
6. In the **Time** fields, enter the time.
7. Select the time difference between your location and UTC from the **Time Zone** drop-down list, for example, the time zone for Eastern time in the USA and Canada is UTC-05:00.
8. Click the **On** option for **Auto Daylight** to set the machine to change automatically for daylight saving time. It will reset itself forward one hour in the spring, and back one hour in the fall/autumn (available only for certain countries).
9. Click **Submit**.

Related Information

- Set up a Scan to Network Profile

Upload Scanned Data to a CIFS Server

>> MFC-J3530DW
>> MFC-J3930DW

MFC-J3530DW

1. Load your document.
2. Press [Scan] > [to Network].
3. Press ▲ or ▼ to select one of the Scan to Network profiles listed.

If the LCD prompts you to enter a PIN, use the LCD to enter the four-digit PIN for the computer, and then press [OK].

4. Do one of the following:
   - To change the settings, press [Options], and then go to the next step.
   - If the profile is not complete (for example, if the logon account name and password are missing or if the quality or file type is not specified), you will be prompted to enter any missing information.

     When you finish the settings, press [Start].
   - If the profile is complete, press [Start].

   After you press [Start], the LCD shows the message [Connecting]. When the connection to the CIFS server is successful, the machine starts scanning. If you are using the scanner glass, set the next page and then press [Continue]. If there are no more pages to scan, press [Finish].
5. Select the scan settings you want to change, and then press [OK].

Option	Description
Scan Type	Select the scan type for your document.
Resolution	Select the scan resolution for your document.
File Type	Select the file format for your document.
Document Size	Select your document size.
Scan Long Paper (ADF) (Available only for certain models)	Scan a long document using the ADF.
File Name	Rename the file.
File Name Style	Select the order in which the date, counter number, and other items appear in the file names.
Brightness	Select the brightness level.
Contrast	Select the contrast level.
ADF Auto Deskew (Available only for certain models)	Correct any skewed documents when they are scanned using the ADF.
Skip Blank Page (Available only for certain models)	When On is selected, blank pages are skipped.
Skip Blank Page Sensitivity (Available only for certain models)	Select the sensitivity level for detecting blank pages in the scanned data. The higher the sensitivity, the easier it is for the machine to detect blank pages.

Option	Description
Remove Background Colour	Change the amount of background colour that is removed.
User Name	Enter the user name.

- To save the profile as a shortcut, press [Save as Shortcut]. You will be asked if you want to make this a One Touch Shortcut. Follow the LCD instructions.

6. Press [Start] to start scanning.

   The LCD shows the message [Connecting]. When the connection to the CIFS server is successful, the machine starts scanning. If you are using the scanner glass, set the next page and then press [Continue]. If there are no more pages to scan, press [Finish].

MFC-J3930DW

1. Load your document.
2. Press [Scan].
3. Swipe left or right to display [to Network], and press it.

   The icon moves to the middle of the touchscreen and is highlighted in blue.
4. Press [to Network].
5. Press ▲ or ▼ to select one of the Scan to Network profiles listed.

If the LCD prompts you to enter a PIN, use the LCD to enter the four-digit PIN for the computer, and then press [OK].

6. Do one of the following:
   - To change the settings, press [Options], and then go to the next step.
   - If the profile is not complete (for example, if the logon account name and password are missing or if the quality or file type is not specified), you will be prompted to enter any missing information.

     When you finish the settings, press [Start].
   - If the profile is complete, press [Start].

   After you press [Start], the LCD shows the message [Connecting]. When the connection to the CIFS server is successful, the machine starts scanning. If you are using the scanner glass, set the next page and then press [Continue]. If there are no more pages to scan, press [Finish].
7. Select the scan settings you want to change, and then press [OK].

Option	Description
2-sided Scan (Available only for certain models)	Select the 2-sided scan mode.
Scan Type	Select the scan type for your document.
Resolution	Select the scan resolution for your document.
File Type	Select the file format for your document.
Document Size	Select your document size.
Scan Long Paper (ADF) (Available only for certain models)	Scan a long document using the ADF.
File Name	Rename the file.

Option	Description
File Name Style	Select the order in which the date, counter number, and other items appear in the file names.
Brightness	Select the brightness level.
Contrast	Select the contrast level.
ADF Auto Deskew (Available only for certain models)	Correct any skewed documents when they are scanned using the ADF.
Skip Blank Page (Available only for certain models)	When On is selected, blank pages are skipped.
Skip Blank Page Sensitivity (Available only for certain models)	Select the sensitivity level for detecting blank pages in the scanned data. The higher the sensitivity, the easier it is for the machine to detect blank pages.
Remove Background Colour	Change the amount of background colour that is removed.
User Name	Enter the user name.

- To save the profile as a shortcut, press [Save as Shortcut]. You will be asked if you want to make this a One Touch Shortcut. Follow the LCD instructions.

8. Press [Start] to start scanning.

   The LCD shows the message [Connecting]. When the connection to the CIFS server is successful, the machine starts scanning. If you are using the scanner glass, set the next page and then press [Continue]. If there are no more pages to scan, press [Finish].

Related Information

- Scan to Network (Windows)

Web Services for Scanning on Your Network (Windows Vista SP2 or greater, Windows 7, Windows 8 and Windows 10)

The Web Services protocol enables Windows Vista (SP2 or greater), Windows 7, Windows 8 and Windows 10 users to scan using a Brother machine on the network. You must install the driver via Web Services.

- Use Web Services to Install Drivers Used for Scanning (Windows Vista, Windows 7, Windows 8 and Windows 10)
- Scan Using Web Services from the Brother Machine (Windows Vista SP2 or greater, Windows 7, Windows 8 and Windows 10)
- Configure Scan Settings for Web Services

Use Web Services to Install Drivers Used for Scanning (Windows Vista, Windows 7, Windows 8 and Windows 10)

Use Web Services to monitor printers on the network.

- Make sure you have installed the Brother software and drivers.
- Verify that the host computer and the Brother machine are on the same subnet, or that the router is correctly configured to pass data between the two devices.
- You must configure the IP address on your Brother machine before you configure this setting.
- For Windows Server 2008, Windows Server 2012 and Windows Server 2012 R2, you must install Print Services.

1. Do one of the following:
   - Windows Vista

     Click **(Start)** > **Network**.

     The machine's Web Services Name appears with the printer icon.

     Right-click the machine you want to install.
   - Windows 7

     Click **(Start)** > **Control Panel** > **Network and Internet** > **View network computers and devices**.

     The machine's Web Services Name appears with the printer icon.

     Right-click the machine you want to install.
   - Windows 8

     Move your mouse to the lower right corner of your desktop. When the menu bar appears, click **Settings** > **Change PC settings** > **Devices** > **Add a device**.

     The machine's Web Services Name appears.
   - Windows 8.1

     Move your mouse to the lower right corner of your desktop. When the menu bar appears, click **Settings** > **Change PC settings** > **PC and devices** > **Devices** > **Add a device**.

     The machine's Web Services Name appears.
   - Windows 10

     Click > **All apps** > **Windows System** > **Control Panel**. In the **Hardware and Sound** group, click **Add a device**.

   - The Web Services Name for the Brother machine is your model name and the MAC Address (Ethernet Address) of your machine (for example, Brother MFC-XXXX (model name) [XXXXXXXXXXXX] (MAC Address / Ethernet Address)).
   - Windows 8/Windows 10

     Move your mouse over the machine name to display the machine's information.

2. Do one of the following:
   - Windows Vista/Windows 7

     Click **Install** in the displayed menu.
   - Windows 8/Windows 10

     Select the machine you want to install.

   To uninstall drivers, click **Uninstall** or (**Remove device**).

Related Information

- Web Services for Scanning on Your Network (Windows Vista SP2 or greater, Windows 7, Windows 8 and Windows 10)

Scan Using Web Services from the Brother Machine (Windows Vista SP2 or greater, Windows 7, Windows 8 and Windows 10)

If you have installed the driver for scanning via Web Services, you can access the Web Services scanning menu on your Brother machine's LCD.

- Certain characters in the messages displayed on the LCD may be replaced with spaces if the language settings of your OS and your Brother machine are different.
- If the LCD displays an insufficient memory error message, choose a smaller size in the **Paper size** setting or a lower resolution in the **Resolution (DPI)** setting.

>> MFC-J3530DW
>> MFC-J3930DW

MFC-J3530DW

1. Load your document.
2. Press [Scan] > [WS Scan].
3. Press ▲ or ▼ to select the type of scan you want, and then press it.
4. Press ▲ or ▼ to display the computer where you want to send data, and then press the computer name.
5. Press [Start].

   The machine starts scanning.

MFC-J3930DW

1. Load your document.
2. Press [Scan].
3. Swipe left or right to display [WS Scan], and press it.

   The icon moves to the middle of the touchscreen and is highlighted in blue.
4. Press [WS Scan].
5. Swipe up or down or press ▲ or ▼ to display the scan options, and then press the type of scan.
6. Swipe up or down or press ▲ or ▼ to display the computer name where you want to send the data, and then press the computer name.
7. Press [Start].

   The machine starts scanning.

Related Information

- Web Services for Scanning on Your Network (Windows Vista SP2 or greater, Windows 7, Windows 8 and Windows 10)

Configure Scan Settings for Web Services

1. Do one of the following:
   - Windows Vista

     Click **(Start)** > **Control Panel** > **Hardware and Sound** > **Scanners and Cameras**.
   - Windows 7

     Click **(Start)** > **Devices and Printers**.
   - Windows 8

     Move your mouse to the lower right corner of your desktop. When the menu bar appears, click **Settings**, and then click **Control Panel**. In the **Hardware and Sound** group, click **View devices and printers**.
   - Windows 10

     Click > **All apps** > **Windows System** > **Control Panel**. In the **Hardware and Sound** group, click **View devices and printers**.
2. Do one of the following:
   - Windows Vista

     Click your machine, and then click the **Scan Profiles** button. The **Scan Profiles** dialog box appears.
   - Windows 7, Windows 8 and Windows 10

     Right-click the machine icon, and then select **Scan profiles...**. The **Scan Profiles** dialog box appears.
3. Select the scan profile you want to use.
4. Make sure the scanner selected in the **Scanner** list is a Brother machine that supports Web Services for scanning, and then click the **Set as Default** button.
5. Click **Edit...**.

   The **Edit Default Profile** dialog box appears.
6. Select the **Source**, **Paper size**, **Color format**, **File type**, **Resolution (DPI)**, **Brightness** and **Contrast** settings.
7. Click the **Save Profile** button.

   These settings will be applied when you scan using the Web Services protocol.

If you are requested to select a scanning application, select Windows Fax and Scan or Windows Photo Gallery from the list.

Related Information

- Web Services for Scanning on Your Network (Windows Vista SP2 or greater, Windows 7, Windows 8 and Windows 10)

Change Scan Button Settings from ControlCenter4 (Windows)

1. Click the (**ControlCenter4**) icon in the task tray, and then click **Open**.
2. Click the **Device Settings** tab.
3. Click the **Device Scan Settings** button.

   The **Device Scan Settings** dialog box appears.

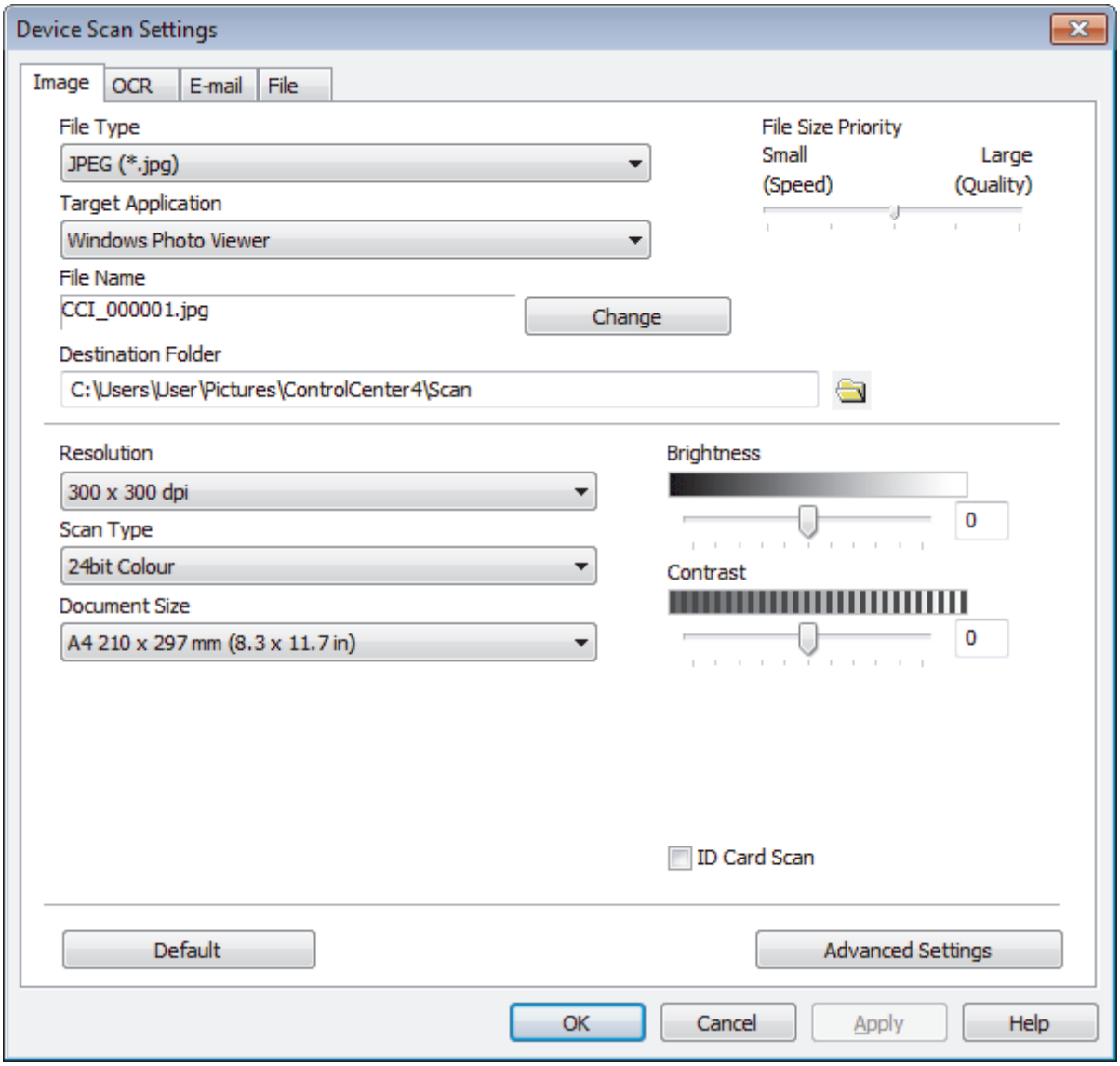

4. Click the tab for the Scan to action you want to change (**Image**, **OCR**, **E-mail**, or **File**).
5. Change the settings as needed.
6. Click **OK**.

Each tab corresponds to a scan feature, as described below.

These settings can be changed.

Click the tabs, and then change the settings.

Tab Name	Corresponding Feature
Image	Scan to Image
OCR	Scan to OCR
E-mail	Scan to Email
File	Scan to File

Settings	Applicable Features			
	Image	**OCR**	**E-mail**	**File**
File Type	Yes	Yes	Yes	Yes
Target Application	Yes	Yes	-	-
OCR Language (Available only for certain models)	-	Yes	-	-
File Name	Yes	Yes	Yes	Yes
Destination Folder	Yes	Yes	Yes	-
Scan Location	-	-	-	Yes
File Size Priority	Yes	-	Yes	Yes
Resolution	Yes	Yes	Yes	Yes
Scan Type	Yes	Yes	Yes	Yes
Document Size	Yes	Yes	Yes	Yes
Brightness	Yes	Yes	Yes	Yes
Contrast	Yes	Yes	Yes	Yes
Auto Crop	Yes	-	Yes	Yes
ID Card Scan	Yes	Yes	Yes	Yes
Advanced Settings	Yes	Yes	Yes	Yes
Default	Yes	Yes	Yes	Yes

File Type

Select the file type you want to use for the scanned data.

Target Application

Select the destination application from the drop-down list.

OCR Language

Set the optical character recognition (OCR) language to match the language of the scanned document's text (Available only for certain models).

File Name

Type a prefix for your file name, if needed.

Destination Folder

Click the folder icon to browse and select the folder where you want to save your scanned documents.

Scan Location

Select the **Folder** or **SharePoint** radio button to specify the destination where you want to save your scanned documents.

File Size Priority

Adjust the data compression ratio of the scanned image. Change the file size by moving the **File Size Priority** slider to the right or left.

Resolution

Select a scanning resolution from the **Resolution** drop-down list. Higher resolutions take more memory and transfer time, but produce a finer scanned image.

Scan Type

Select from a range of scan colour depths.

- **Auto**

  Use for any type of document. This mode automatically picks an appropriate colour depth for the document.
- **Black & White**

  Use for text or line art images.
- **Grey (Error Diffusion)**

  Use for photographic images or graphics. (Error Diffusion is a method for creating simulated grey images without using true grey dots. Black dots are put in a specific pattern to give a grey appearance.)
- **True Grey**

  Use for photographic images or graphics. This mode is more accurate because it uses up to 256 shades of grey.
- **24bit Colour**

  Use to create an image with the most accurate colour reproduction. This mode uses up to 16.8 million colours to scan the image, but it requires the most memory and has the longest transfer time.

Document Size

Select the exact size of your document from the **Document Size** drop-down list.

- If you select the **1 to 2 (A4)** option, the scanned image will be divided into two A5-size documents.

Brightness

Set the **Brightness** level by dragging the slider to the right or left to lighten or darken the image. If the scanned image is too light, set a lower brightness level and scan the document again. If the image is too dark, set a higher brightness level and scan the document again. You can also type a value into the field to set the **Brightness** level.

Contrast

Increase or decrease the **Contrast** level by moving the slider to the right or left. An increase emphasises dark and light areas of the image, while a decrease reveals more details in grey areas. You can also type a value into the field to set the **Contrast** level.

Auto Crop

Scan multiple documents placed on the scanner glass. The machine will scan each document and create separate files or a single multi-page file.

ID Card Scan

Select this check box to scan both sides of an identification card onto one page.

Advanced Settings

Click the **Advanced Settings** button in the scan settings dialog box to configure advanced settings.

- **Remove Bleed-through / Pattern**
  - **Remove Background Colour**

    Remove the base colour of documents to make the scanned data more legible.
- **Rotate Image**

  Rotate the scanned image.
- **Skip Blank Page**

  Remove the document's blank pages from the scanning results. (Available only for certain models)

- **Display Scanning Results**

  Show the numbers of total pages saved and blank pages skipped on your computer screen. (Available only for certain models)

- **ADF Auto Deskew**

  When scanning the document from the ADF, the machine corrects skewing of the document automatically. (Available only for certain models)

Default

Select this option to restore all settings to their factory setting values.

Related Information

- Scan Using the Scan Button on Your Brother Machine

Change Scan Button Settings from ControlCenter2 (Mac)

1. In the **Finder** menu bar, click **Go** > **Applications** > **Brother**, and then double-click the (**ControlCenter**) icon.

   The **ControlCenter2** screen appears.
2. Hold the control key on your keyboard and click the scan destination (**Image**, **OCR**, **E-mail**, or **File**) whose settings you want to change.
3. Click the **Device Button** tab.

   The settings for the scan destination that you selected appear.

   The following example shows the **Scan to Image** settings.

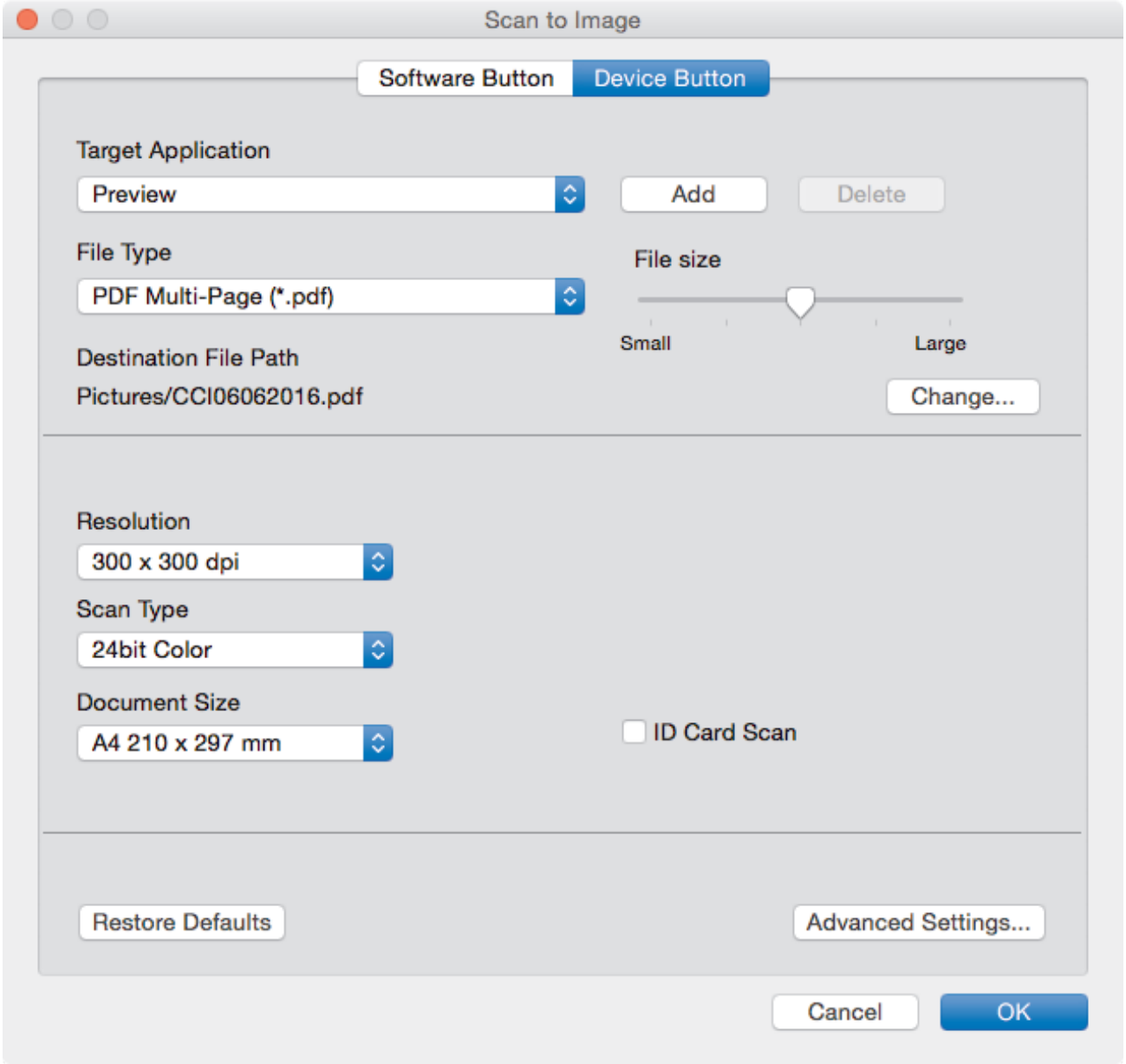

Settings	Applicable Features			
	Image	OCR	E-mail	File
Target Application /E-mail Application	Yes	Yes	Yes	-
File Type	Yes	Yes	Yes	Yes
File size	Yes	-	Yes	Yes

OCR Language (only available for certain models)	-	Yes	-	-
Destination File Path	Yes	Yes	Yes	-
File Name	Yes	Yes	Yes	Yes
Insert Date in File Name	Yes	Yes	Yes	Yes
Destination Folder	Yes	Yes	Yes	Yes
Resolution	Yes	Yes	Yes	Yes
Scan Type	Yes	Yes	Yes	Yes
Document Size	Yes	Yes	Yes	Yes
ID Card Scan	Yes	Yes	Yes	Yes
Advanced Settings	Yes	Yes	Yes	Yes
Restore Defaults	Yes	Yes	Yes	Yes

Target Application/E-mail Application

Select which application is used to open scanned data. Only applications installed on your computer can be selected.

- **Add**

  Add an application to the pop-up menu.

  Type the application name in the **Application Name** field (up to 30 characters) and select your preferred application by clicking the **Browse** button. Select the **File Type** option from the pop-up menu.

- **Delete**

  Delete an application you have added to the pop-up menu.

  Select the application from the **Application Name** pop-up menu, and then click **Delete**.

File Type

Select the file type you want to use for the scanned data.

File size

Change the file size by moving the **File size** slider to the right or left.

OCR Language

Set the optical character recognition (OCR) language to match the language of the scanned document's text (available only for certain models).

Destination File Path

Click the **Change** button to change the prefix of the file name and the path of the destination folder.

File Name

Type a prefix for your file name, if needed. To change the prefix for the **Image**, **OCR** and **E-mail** features, click **Change**.

Insert Date in File Name

Automatically inserts the date in the file name of the scanned image. To insert the date in the file name for the **Image**, **OCR** and **E-mail** features, click **Change**.

Destination Folder

To change the folder for the **Image**, **OCR** and **E-mail** features, click **Change**. Click **Browse** to select the folder where you want to save your scanned document. Select the **Show Folder** option to automatically display the destination folder after scanning to a **File**.

Resolution

Select a scanning resolution from the **Resolution** pop-up menu. Higher resolutions take more memory and transfer time, but produce a finer scanned image.

Scan Type

Select from a range of scan colour depths.

- **Black & White**

  Use for text or line art images.

- **Gray (Error Diffusion)**

  Use for photographic images or graphics. (Error Diffusion is a method for creating simulated grey images without using true grey dots. Black dots are put in a specific pattern to give a grey appearance.)

- **True Gray**

  Use for photographic images or graphics. This mode is more accurate because it uses up to 256 shades of grey.

- **24bit Color**

  Use to create an image with the most accurate colour reproduction. This mode uses up to 16.8 million colours to scan the image, but it requires the most memory and has the longest transfer time.

- **Auto**

  Use for any type of document. This mode automatically picks an appropriate colour depth for the document.

Document Size

Select the exact size of your document from the **Document Size** pop-up menu.

- If you select the **1 to 2 (A4)** option, the scanned image will be divided into two A5-size documents.

ID Card Scan

Select this check box to scan both sides of an identification card onto one page.

Advanced Settings

Click the **Advanced Settings** button in the scan settings dialog box to configure advanced settings.

- **Brightness**

  Set the **Brightness** level by dragging the slider to the right or left to lighten or darken the image. If the scanned image is too light, set a lower brightness level and scan the document again. If the image is too dark, set a higher brightness level and scan the document again.

- **Contrast**

  Increase or decrease the **Contrast** level by moving the slider to the right or left. An increase emphasise dark and light areas of the image, while a decrease reveals more details in grey areas.

- **ADF Auto Deskew**

  When scanning the document from the ADF, the machine corrects skewing of the document automatically. (Available only for certain models)

- **Remove Background Color**

  Remove the base colour of documents to make the scanned data more recognisable. When you use this feature, select from three settings: High, Medium and Low.

- **Skip Blank Page**

  Remove blank pages of the document from the scanning results. (Available only for certain models)

- **Display Scanning Results**

  Show the numbers of total pages saved and blank pages skipped on your computer screen. (Available only for certain models)

- **Rotate Image**

  Rotate the scanned image.

Restore Defaults

Select this option to restore all settings to their factory setting values.

Related Information

- Scan Using the Scan Button on Your Brother Machine

Scan from Your Computer (Windows)

There are several ways you can use your computer to scan photos and documents on your Brother machine. Use the software applications provided by Brother, or use your favourite scanning application.

- Scan Using ControlCenter4 Home Mode (Windows)
- Scan Using ControlCenter4 Advanced Mode (Windows)
- Scan Using Nuance™ PaperPort™ 14 or Other Windows Applications
- Scan Using Windows Photo Gallery or Windows Fax and Scan
- Install BookScan Enhancer and Whiteboard Enhancer (Windows)

Scan Using ControlCenter4 Home Mode (Windows)

Use ControlCenter4 Home Mode to access your machine's main features.

- Scan Using ControlCenter4 Home Mode (Windows)
- Save Scanned Data to a Folder as a PDF File Using ControlCenter4 Home Mode (Windows)
- Scan Both Sides of a Document Automatically Using ControlCenter4 Home Mode (Windows)
- Scan Settings for ControlCenter4 Home Mode (Windows)
- Change the Operation Mode in ControlCenter4 (Windows)

Scan Using ControlCenter4 Home Mode (Windows)

Select **Home Mode** as the mode setting for ControlCenter4.

1. Load your document.
2. Click the (**ControlCenter4**) icon in the task tray, and then click **Open**.
3. Click the **Scan** tab.

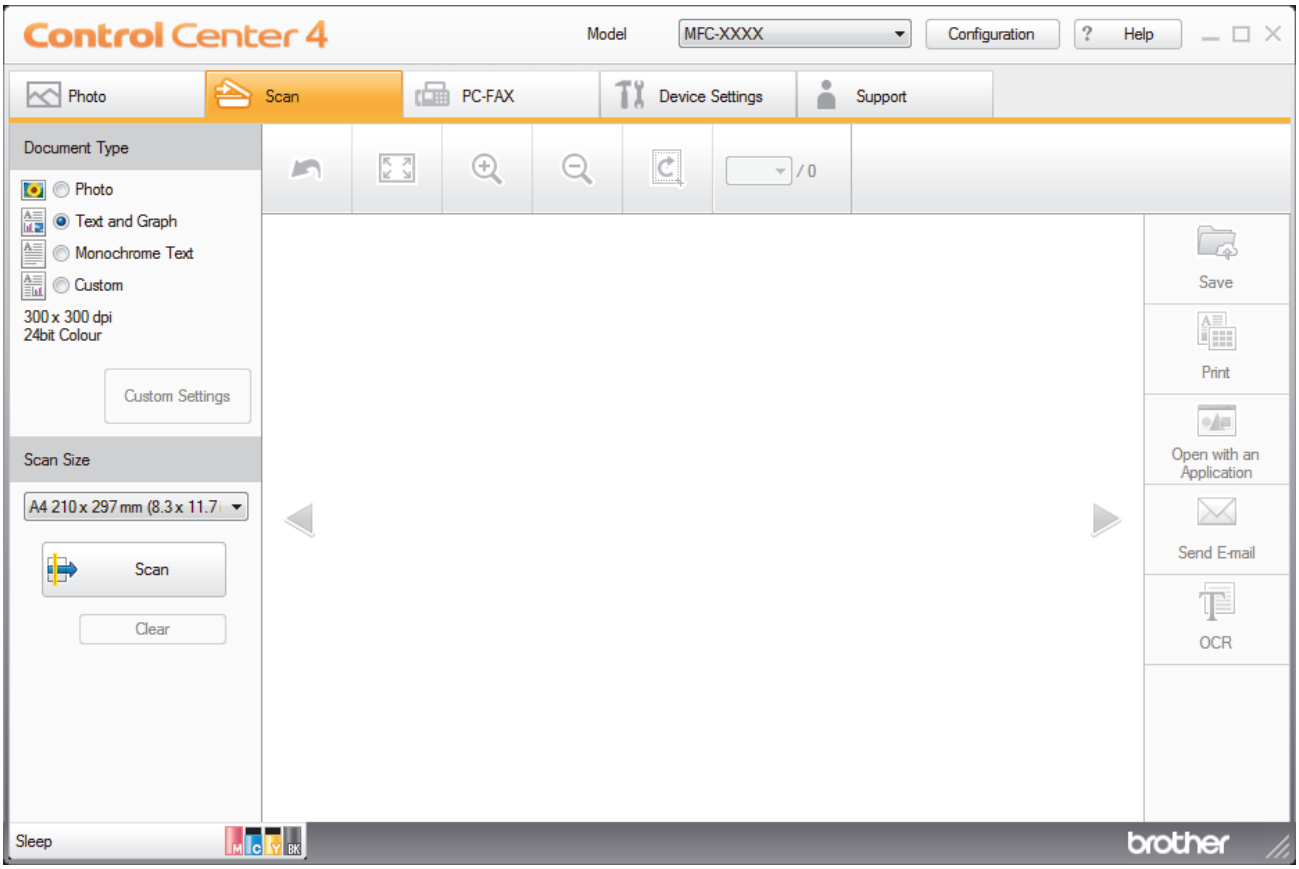

4. Select the **Document Type**.
5. Change the document's **Scan Size**, if needed.
6. Click (**Scan**).

   The machine starts scanning, and the scanned image appears in the image viewer.
7. If you scanned multiple pages using the ADF, click the left or right arrow buttons to preview each scanned page.
8. Crop the scanned image, if needed.
9. Do one of the following:
   - Click (**Save**) to save scanned data.
   - Click (**Print**) to print scanned data.
   - Click (**Open with an Application**) to open scanned data in another application.
   - Click (**Send E-mail**) to attach scanned data to an email.
   - Click (**OCR**) to convert your scanned document to an editable text file. (available only for certain models)

Related Information

- Scan Using ControlCenter4 Home Mode (Windows)
- Select Document Type Using ControlCenter4 Home Mode (Windows)
- Change Scan Size Using ControlCenter4 Home Mode (Windows)
- Crop a Scanned Image Using ControlCenter4 Home Mode (Windows)
- Print Scanned Data Using ControlCenter4 Home Mode (Windows)
- Open with an Application Using ControlCenter4 Home Mode (Windows)

Select Document Type Using ControlCenter4 Home Mode (Windows)

- Select the **Document Type** option that matches the type of original you want to scan.

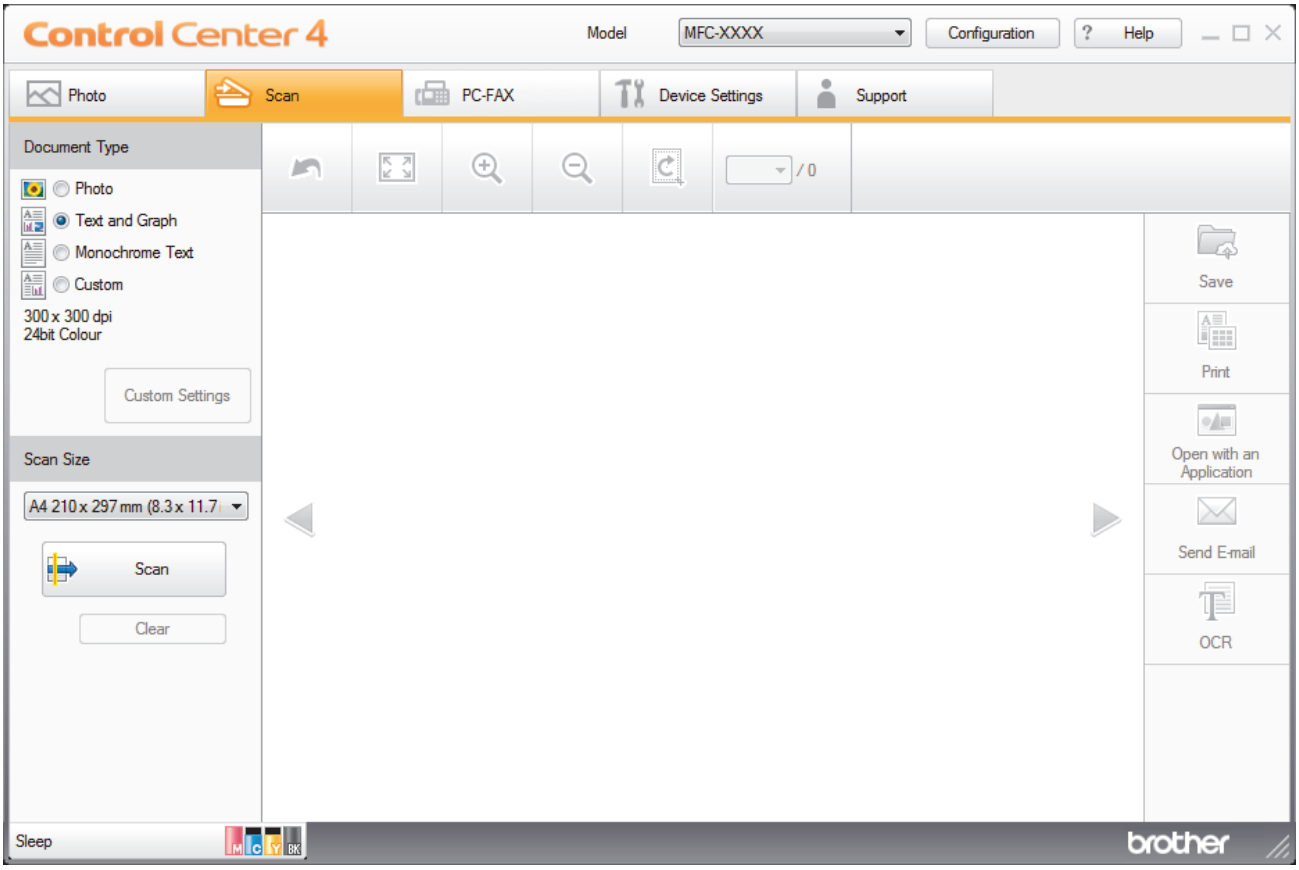

Option	Description
Photo	**600 x 600 dpi 24bit Colour**
Text and Graph	**300 x 300 dpi 24bit Colour**
Monochrome Text	**200 x 200 dpi Black & White**
Custom	**300 x 300 dpi** (**24bit Colour** as default) Select the scan settings you want from the **Custom Settings** button.

Related Information

- Scan Using ControlCenter4 Home Mode (Windows)
- Custom Scan Settings (Windows)

Custom Scan Settings (Windows)

Select **Custom** in the **Document Type** list to change advanced scan settings.

- Select **Custom**, and then click the **Custom Settings** button.

  The **Custom Scan Settings** dialog box appears.

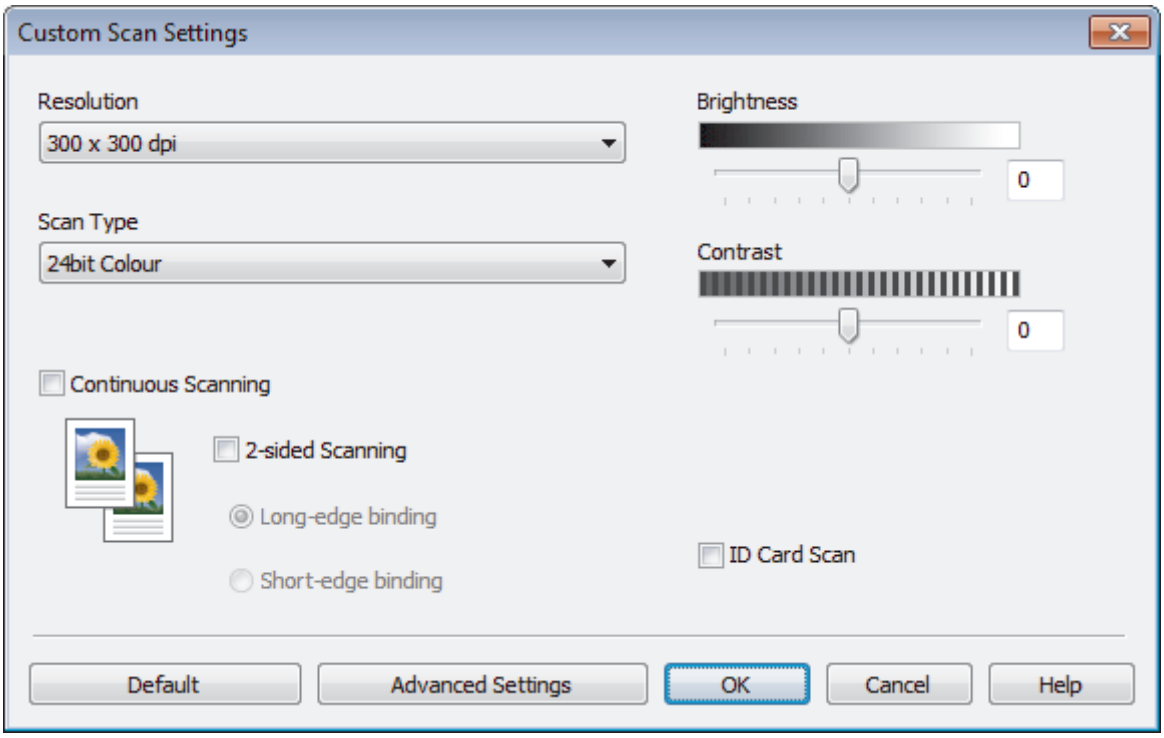

You can change the following settings:

Resolution

Select a scanning resolution from the **Resolution** drop-down list. Higher resolutions take more memory and transfer time, but produce a finer scanned image.

Scan Type

Select from a range of scan colour depths.

- **Auto**

  Use for any type of document. This mode automatically picks an appropriate colour depth for the document.

- **Black & White**

  Use for text or line art images.

- **Grey (Error Diffusion)**

  Use for photographic images or graphics. (Error Diffusion is a method for creating simulated grey images without using true grey dots. Black dots are put in a specific pattern to give a grey appearance.)

- **True Grey**

  Use for photographic images or graphics. This mode is more accurate because it uses up to 256 shades of grey.

- **24bit Colour**

  Use to create an image with the most accurate colour reproduction. This mode uses up to 16.8 million colours to scan the image, but it requires the most memory and has the longest transfer time.

Brightness

Set the **Brightness** level by dragging the slider to the right or left to lighten or darken the image. If the scanned image is too light, set a lower brightness level and scan the document again. If the image is too dark, set a higher brightness level and scan the document again. You can also type a value into the field to set the **Brightness** level.

Contrast

Increase or decrease the **Contrast** level by moving the slider to the right or left. An increase emphasises dark and light areas of the image, while a decrease reveals more details in grey areas. You can also type a value into the field to set the **Contrast** level.

Auto Crop

Scan multiple documents placed on the scanner glass. The machine will scan each document and create separate files or a single multi-page file.

Continuous Scanning

Select this option to scan multiple pages. After a page is scanned, select either continue scanning or finish.

2-sided Scanning

Select this check box to scan both sides of the document. When using the Automatic 2-sided Scan feature, you must select the **Long-edge binding** or **Short-edge binding** option, depending on the layout of your original, to make sure the data file you create appears correctly. (Available only for certain models)

ID Card Scan

Select this check box to scan both sides of an identification card onto one page.

Advanced Settings

Configure advanced settings by clicking the **Advanced Settings** button in the Scan Settings dialog box.

- **Remove Bleed-through / Pattern**
  - **Remove Background Colour**

    Remove the base colour of documents to make the scanned data more legible. (Available only for certain models)
- **Rotate Image**

  Rotate the scanned image.
- **Skip Blank Page**

  Remove the document's blank pages from the scanning results. (Available only for certain models)
- **Display Scanning Results**

  Show the numbers of total pages saved and blank pages skipped on your computer screen. (Available only for certain models)
- **ADF Auto Deskew**

  When scanning the document from the ADF, the machine corrects skewing of the document automatically. (Available only for certain models)

Related Information

- Select Document Type Using ControlCenter4 Home Mode (Windows)

Change Scan Size Using ControlCenter4 Home Mode (Windows)

For faster scan speeds, select the exact size of your document from the **Scan Size** drop-down menu.

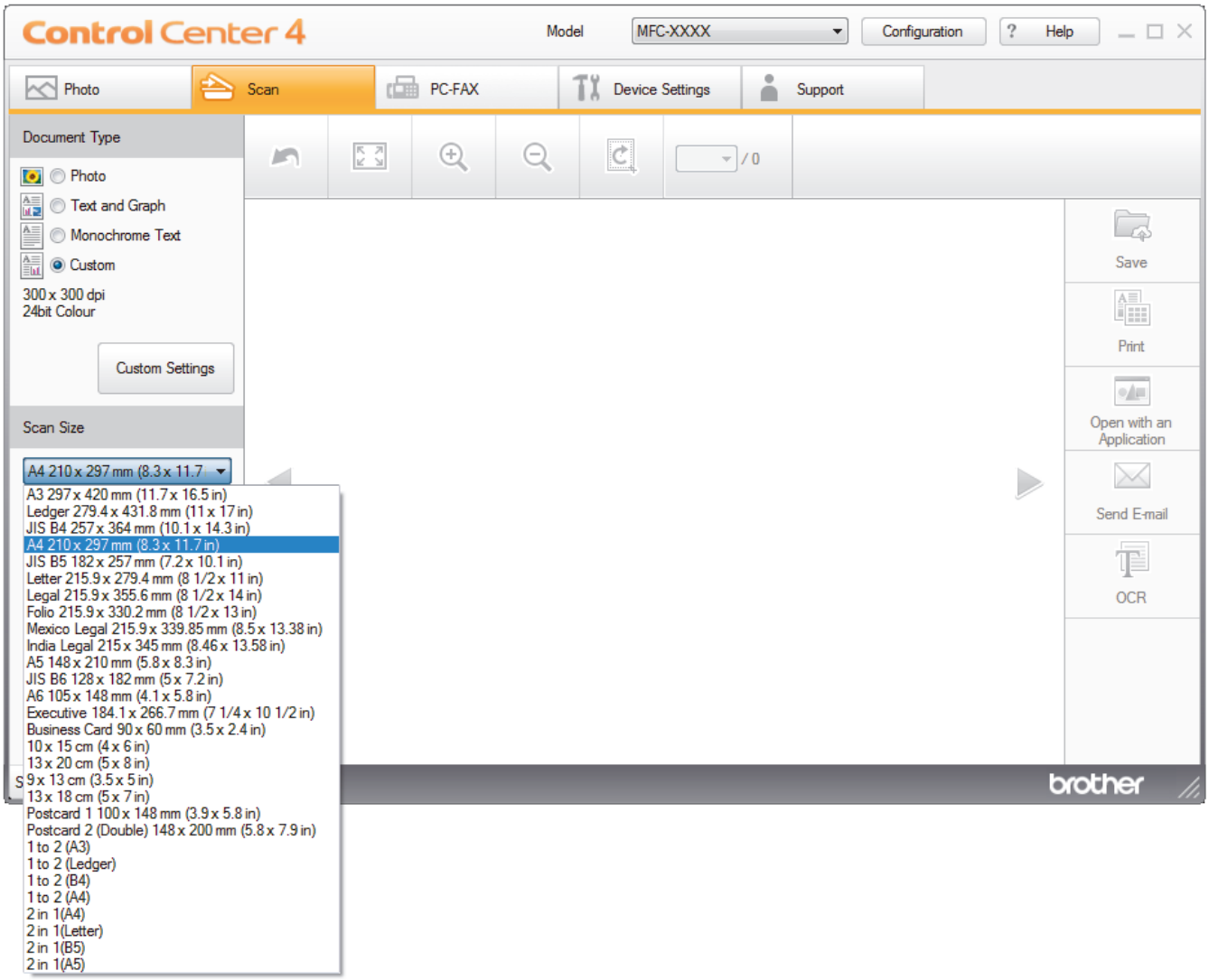

Related Information

- Scan Using ControlCenter4 Home Mode (Windows)

Crop a Scanned Image Using ControlCenter4 Home Mode (Windows)

The crop tool on the Image Editing Toolbar lets you trim unwanted areas from your scanned image. Use the **Zoom In** and **Zoom Out** tools to help view the image to be cropped.

Image Editing Toolbar

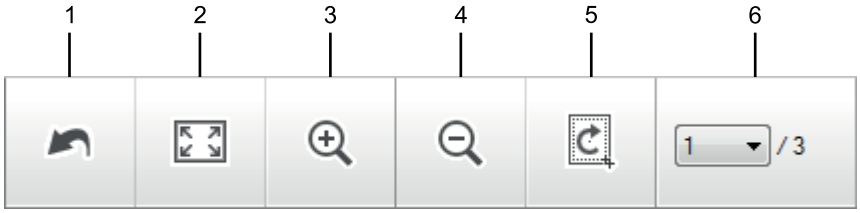

1. **Restart**

   Cancels all the edits applied to the selected image. The edited image returns to its original state.
2. **Fit to Window**

   Displays the scanned image so that the entire image fits in the window.
3. **Zoom In**

   Zooms in on the scanned image.
4. **Zoom Out**

   Zooms out of the scanned image.
5. **Crop and Edit**

   Removes the outer parts of the image. Click the **Crop and Edit** button, and then change the frame to contain the area you want to keep after cropping.
6. **Page Counter**

   Indicates the page number of the scanned page currently shown in the image viewer. To display a different page, select the desired page number from the drop-down page number list.

If you have scanned multiple pages, you can see the next or previous scanned page by clicking the left or right arrow buttons in the preview window.

1. Scan a document.
2. Click (**Crop and Edit**) to edit the scanned image.

   The **Crop and Edit - ControlCenter4** window appears.

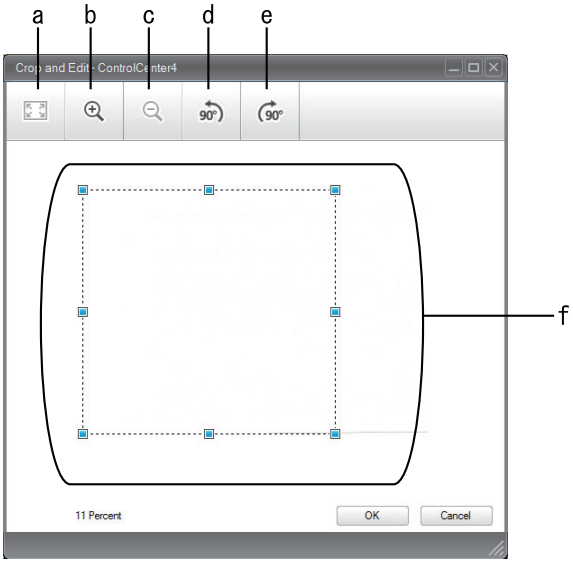

a. Expands the scanned image so that the entire image fits in the window.
b. Zooms in on the image.
c. Zooms out of the image.
d. Rotates the image counter-clockwise 90 degrees.
e. Rotates the image clockwise 90 degrees.
f. Click and drag the frame to adjust the area to be cropped.

3. Click **OK**.
   The edited image appears in the image viewer.

Related Information

- Scan Using ControlCenter4 Home Mode (Windows)

Print Scanned Data Using ControlCenter4 Home Mode (Windows)

Scan a document on your Brother machine, and then print copies using the printer driver features that are available in ControlCenter4.

1. Scan a document.
2. Click **Print**.

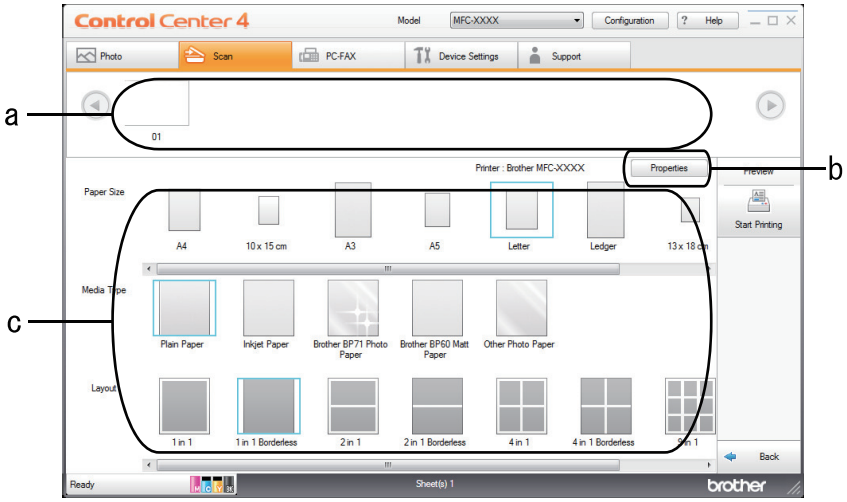

a. Shows which images are currently selected, and how many copies of each image will print.

b. Click the **Properties** button to change specific printer settings.

c. Select the **Paper Size**, **Media Type** and **Layout** options. The current settings are enclosed in a blue square.

3. Configure the print settings, and then click the **Start Printing** button.

Related Information

- Scan Using ControlCenter4 Home Mode (Windows)

Open with an Application Using ControlCenter4 Home Mode (Windows)

The **Open with an Application** button lets you scan an image directly into your graphics application for editing.

1. Click the **Open with an Application** button.
2. Select the application from the drop-down list, and then click **OK**.

   The image will be opened in the application you have selected.

Related Information

- Scan Using ControlCenter4 Home Mode (Windows)

Save Scanned Data to a Folder as a PDF File Using ControlCenter4 Home Mode (Windows)

Select **Home Mode** as the mode setting for ControlCenter4.

1. Load your document.
2. Click the (**ControlCenter4**) icon in the task tray, and then click **Open**.
3. Click the **Scan** tab.

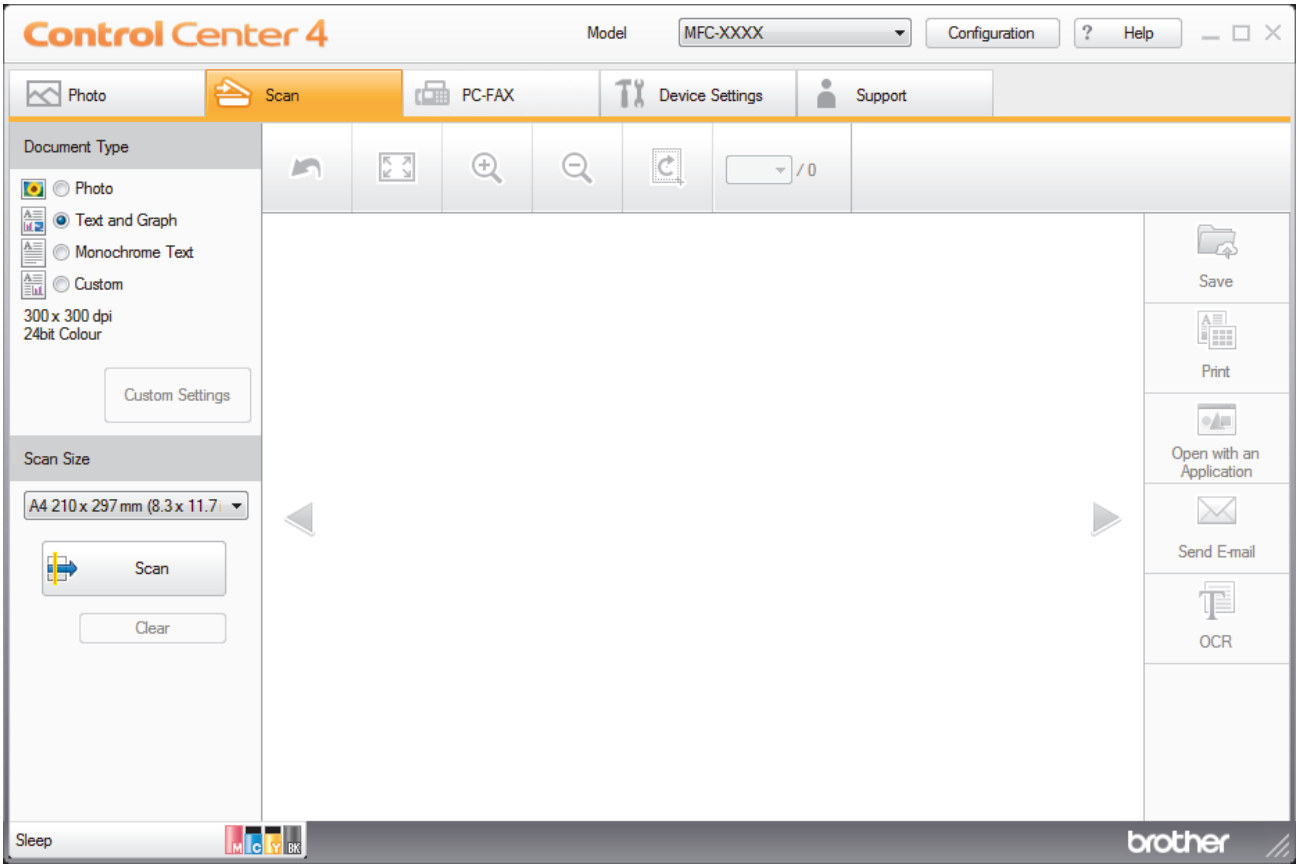

4. Select the **Document Type**.
5. Change the size of your document, if needed.
6. Click (**Scan**).

   The machine starts scanning, and the scanned image appears in the image viewer.
7. Click the left or right arrow buttons to preview each scanned page.
8. Click **Save**.

   The **Save** dialog box appears.
9. Click the **File Type** drop-down list, and then select a PDF file.

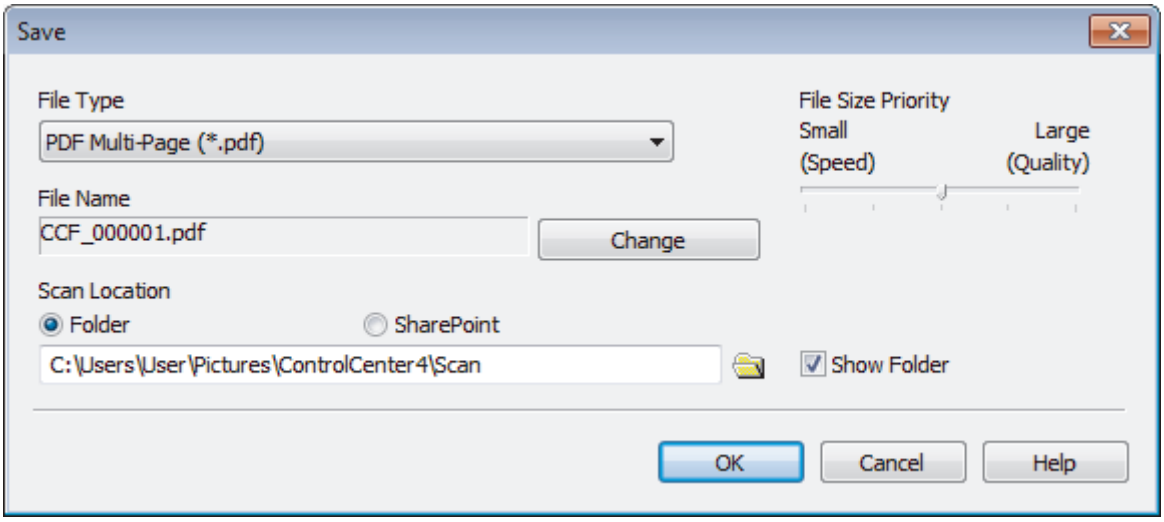

To save the document as a password-protected PDF, select **Secure PDF Single-Page (*.pdf)** or **Secure PDF Multi-Page (*.pdf)** from the **File Type** drop-down list, click , and then type the password.

10. To change the file name, click the **Change** button, if needed.
11. Click the folder icon to browse and select the folder where you want to save your scanned documents.
12. Click **OK**.

    The scanned document is saved to the destination folder as a PDF.

Related Information

- Scan Using ControlCenter4 Home Mode (Windows)

Scan Both Sides of a Document Automatically Using ControlCenter4 Home Mode (Windows)

Related Models: MFC-J3930DW

Select **Home Mode** as the mode setting for ControlCenter4.

1. Load documents in the ADF.

To scan both sides of a document automatically, you must use the ADF, not the flatbed scanner glass.

2. Click the (**ControlCenter4**) icon in the task tray, and then click **Open**.
3. Click the **Scan** tab.

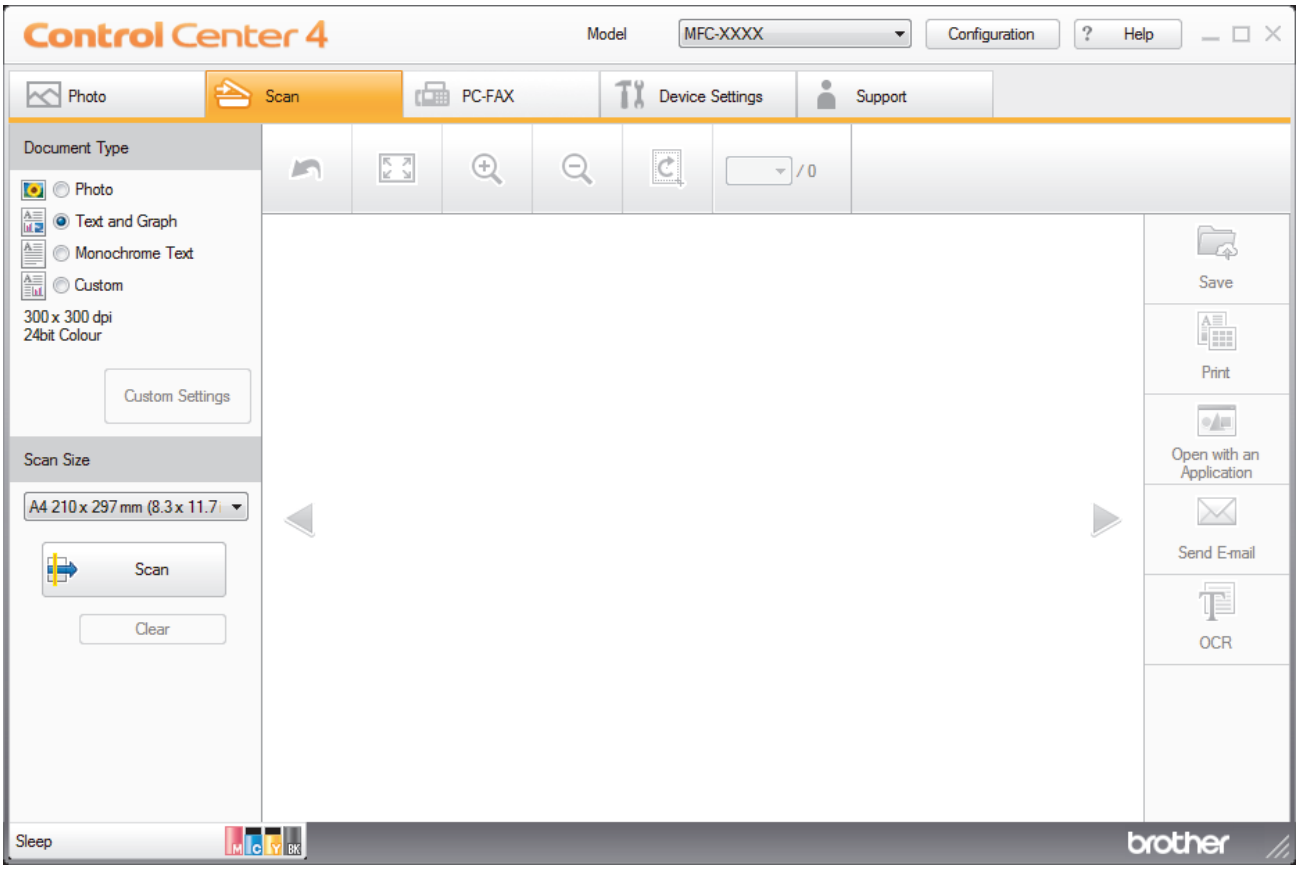

4. Under **Document Type**, select **Custom**, and then click the **Custom Settings** button.
   The **Custom Scan Settings** dialog box appears.
5. Select the **2-sided Scanning** check box.
6. Select the **Long-edge binding** or **Short-edge binding** option, depending on the Original layout.
7. Configure other **Custom Scan Settings**, if needed.
8. Click **OK**.
9. Click (**Scan**).
   The machine starts scanning, and the scanned image appears in the image viewer.
10. Click the left or right arrow buttons to preview each scanned page.
11. Do one of the following:
    - Click (**Save**) to save scanned data.

- Click (**Print**) to print scanned data.
- Click (**Open with an Application**) to open scanned data in another application.
- Click (**Send E-mail**) to attach scanned data to an email.
- Click (**OCR**) to convert your scanned document to an editable text file. (available only for certain models)

Related Information

- Scan Using ControlCenter4 Home Mode (Windows)

Scan Settings for ControlCenter4 Home Mode (Windows)

Settings	Applicable Features			
	Open with an Application	OCR	Send E-mail	Save
File Type	-	Yes	Yes	Yes
Target Application	Yes	Yes	-	-
OCR Language (Available only for certain models)	-	Yes	-	-
File Name	-	-	-	Yes
Scan Location	-	-	-	Yes
Show Folder	-	-	-	Yes
File Size Priority	-	-	Yes	Yes

File Type

Select the file type you want to use for the scanned data.

For **Send E-mail** and **Save**:

- **Windows Bitmap (*.bmp)**
- **JPEG (*.jpg)** (recommended for most users when scanning pictures)
- **TIFF Single-Page (*.tif)**
- **TIFF Multi-Page (*.tif)**
- **Portable Network Graphics (*.png)**
- **PDF Single-Page (*.pdf)** (recommended for scanning and sharing documents)
- **PDF Multi-Page (*.pdf)** (recommended for scanning and sharing documents)
- **PDF/A Single-Page (*.pdf)** (recommended for scanning and sharing documents)
- **PDF/A Multi-Page (*.pdf)** (recommended for scanning and sharing documents)
- **High Compression PDF Single-Page (*.pdf)**
- **High Compression PDF Multi-Page (*.pdf)**
- **Secure PDF Single-Page (*.pdf)**
- **Secure PDF Multi-Page (*.pdf)**
- **Searchable PDF Single-Page (*.pdf)**
- **Searchable PDF Multi-Page (*.pdf)**
- **XML Paper Specification (*.xps)** (the XML Paper Specification is available for Windows Vista, Windows 7, Windows 8 and Windows 10, or when using applications that support XML Paper Specification files)
- **Microsoft Office Word (*.docx)** (Available only for certain models)
- **Microsoft Office PowerPoint (*.pptx)** (Available only for certain models)
- **Microsoft Office Excel (*.xlsx)** (Available only for certain models)

For **OCR**:

- **Text (*.txt)**
- **HTML 3.2 (*.htm)**
- **HTML 4.0 (*.htm)**
- **Searchable PDF Single-Page (*.pdf)**
- **Searchable PDF Multi-Page (*.pdf)**
- **WordPad (*.rtf)**

- **RTF Word 2000 (*.rtf)**
- **WordPerfect 9, 10 (*.wpd)**
- **Microsoft Excel 2003, XP (*.xls)**

Target Application

Select the destination application from the drop-down list.

OCR Language

Set the optical character recognition (OCR) language to match the language of the scanned document's text (Available only for certain models).

File Name

Click **Change** to change the file name's prefix.

Scan Location

Select the **Folder** or **SharePoint** radio button to specify the destination where you want to save your scanned documents.

Show Folder

Select this option to automatically display the destination folder after scanning.

File Size Priority

Adjust the data compression ratio of the scanned image. Change the file size by moving the **File Size Priority** slider to the right or left.

Custom Settings

Select the **Custom** option, click the **Custom Settings** button, and then change settings.

Scan Size

Select the exact size of your document from the **Scan Size** drop-down menu.

Related Information

- Scan Using ControlCenter4 Home Mode (Windows)

Scan Using ControlCenter4 Advanced Mode (Windows)

ControlCenter4 Advanced Mode gives you more control over the details of your machine's features and allows you to customise one-button scan actions.

- Scan Photos and Graphics Using ControlCenter4 Advanced Mode (Windows)
- Save Scanned Data to a Folder as a PDF File Using ControlCenter4 Advanced Mode (Windows)
- Scan Both Sides of a Document Automatically Using ControlCenter4 Advanced Mode (Windows)
- Scan Both Sides of an ID Card Using ControlCenter4 Advanced Mode (Windows)
- Scan to Email Attachment Using ControlCenter4 Advanced Mode (Windows)
- Scan to an Editable Text File (OCR) Using ControlCenter4 Advanced Mode (Windows)
- Scan to an Office File Using ControlCenter4 Advanced Mode (Windows)
- Scan Settings for ControlCenter4 Advanced Mode (Windows)
- Change the Operation Mode in ControlCenter4 (Windows)

Scan Photos and Graphics Using ControlCenter4 Advanced Mode (Windows)

Send scanned photos or graphics directly to your computer.

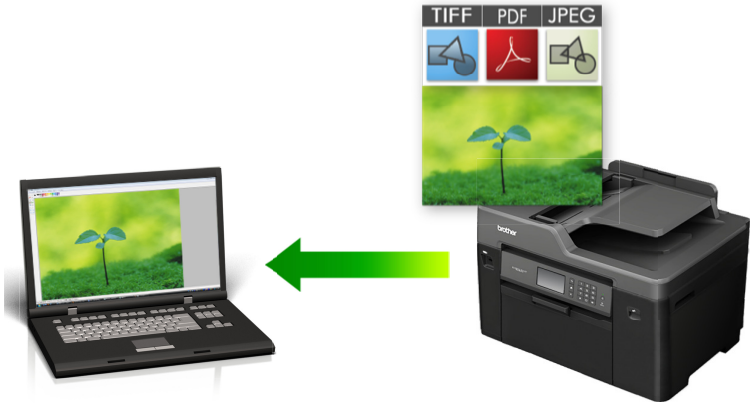

Select **Advanced Mode** as the mode setting for ControlCenter4.

1. Load your document.
2. Click the (**ControlCenter4**) icon in the task tray, and then click **Open**.
3. Click the **Scan** tab.

4. Click the **Image** button.

   The scan settings dialog box appears.

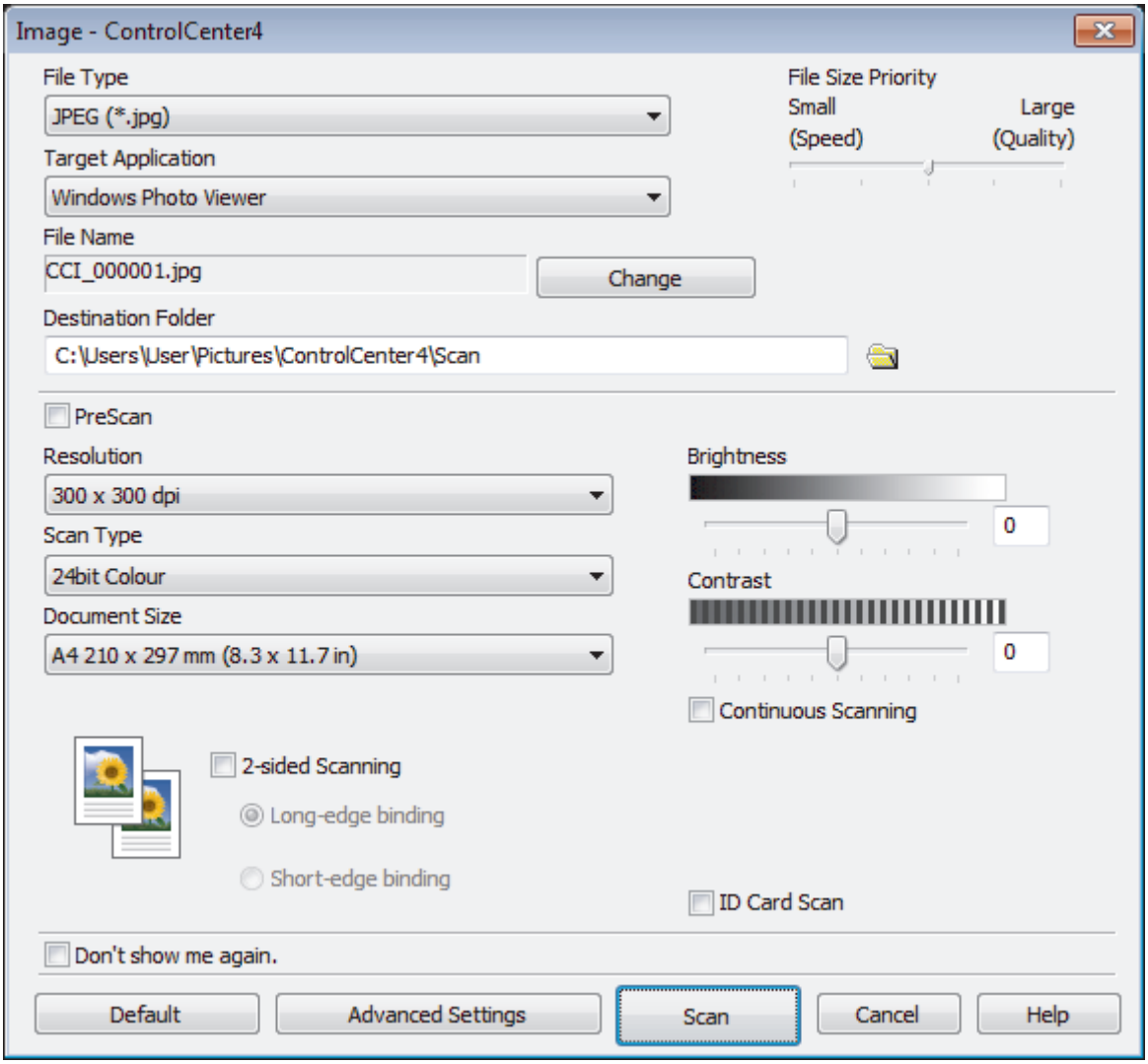

5. Change the scan settings, such as file format, file name, destination folder, resolution and colour, if needed.

- To change the file name, click **Change**.
- To change **Destination Folder**, click the folder icon.
- To preview and configure the scanned image, select the **PreScan** check box.

6. Click **Scan**.

   The machine starts scanning. The image opens in the application you have selected.

Related Information

- Scan Using ControlCenter4 Advanced Mode (Windows)

Save Scanned Data to a Folder as a PDF File Using ControlCenter4 Advanced Mode (Windows)

Scan documents and save them to a folder on your computer as PDF files.

Select **Advanced Mode** as the mode setting for ControlCenter4.

1. Load your document.
2. Click the (**ControlCenter4**) icon in the task tray, and then click **Open**.
3. Click the **Scan** tab.

4. Click the **File** button.

   The scan settings dialog box appears.

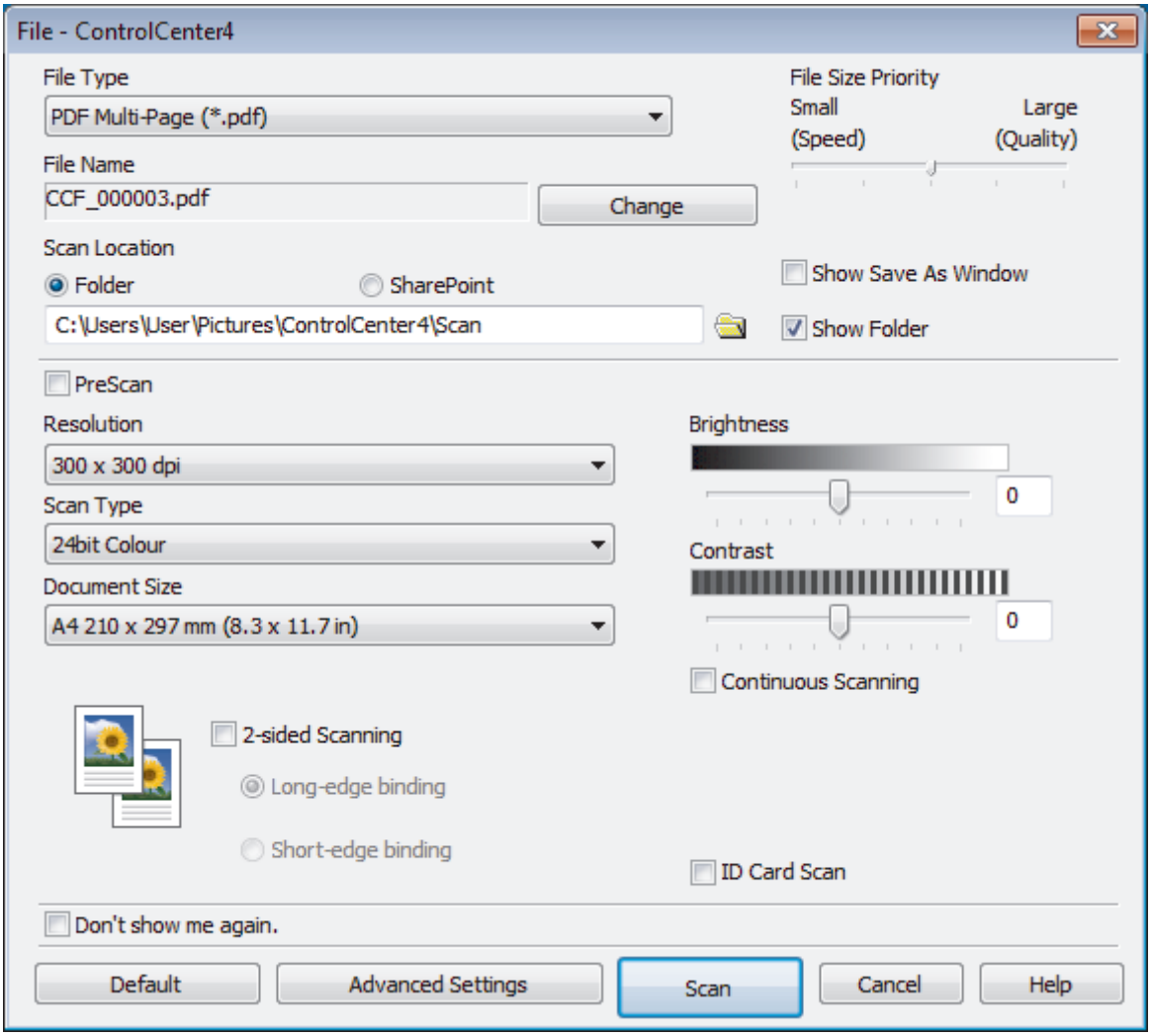

5. Click the **File Type** drop-down list, and then select a PDF file.

To save the document as a password-protected PDF, select **Secure PDF Single-Page (*.pdf)** or **Secure PDF Multi-Page (*.pdf)** from the **File Type** drop-down list, click , and then type the password..

6. Click the folder icon to browse and select the folder where you want to save your scanned documents.
7. Change the scan settings, such as file format, file name, resolution and colour, if needed.

To preview and configure the scanned image, select the **PreScan** check box.

8. Click **Scan**.

   The machine starts scanning. The file is saved in the folder you selected.

Related Information

- Scan Using ControlCenter4 Advanced Mode (Windows)

Scan Both Sides of a Document Automatically Using ControlCenter4 Advanced Mode (Windows)

Related Models: MFC-J3930DW

Select **Advanced Mode** as the mode setting for ControlCenter4.

1. Load documents in the ADF.

To scan both sides of a document automatically, you must use the ADF, not the flatbed scanner glass.

2. Click the (**ControlCenter4**) icon in the task tray, and then click **Open**.
3. Click the **Scan** tab.

4. Click the button for the setting you want to change (**Image**, **OCR**, **E-mail**, or **File**).
   The scan settings dialog box appears.
5. Select the **2-sided Scanning** check box.
6. Select the **Long-edge binding** or **Short-edge binding** option, depending on the Original layout.
7. Change the scan settings, such as file format, file name, destination folder, resolution and colour, if needed.

- To change the file name, click **Change**.
- To change **Destination Folder**, click the folder icon.

8. Click **Scan**.
   The machine starts scanning.

You have now changed the default settings for your selected Scan to action. These settings will be used the next time one of the scan options (**Image**, **OCR**, **E-mail**, or **File**) is selected for this action.

Related Information

- Scan Using ControlCenter4 Advanced Mode (Windows)

Scan Both Sides of an ID Card Using ControlCenter4 Advanced Mode (Windows)

Select **Advanced Mode** as the mode setting for ControlCenter4.

1. Place an ID card on the scanner glass.
2. Click the (**ControlCenter4**) icon in the task tray, and then click **Open**.
3. Click the **Scan** tab.

4. Click the **File** button.

   The scan settings dialog box appears.

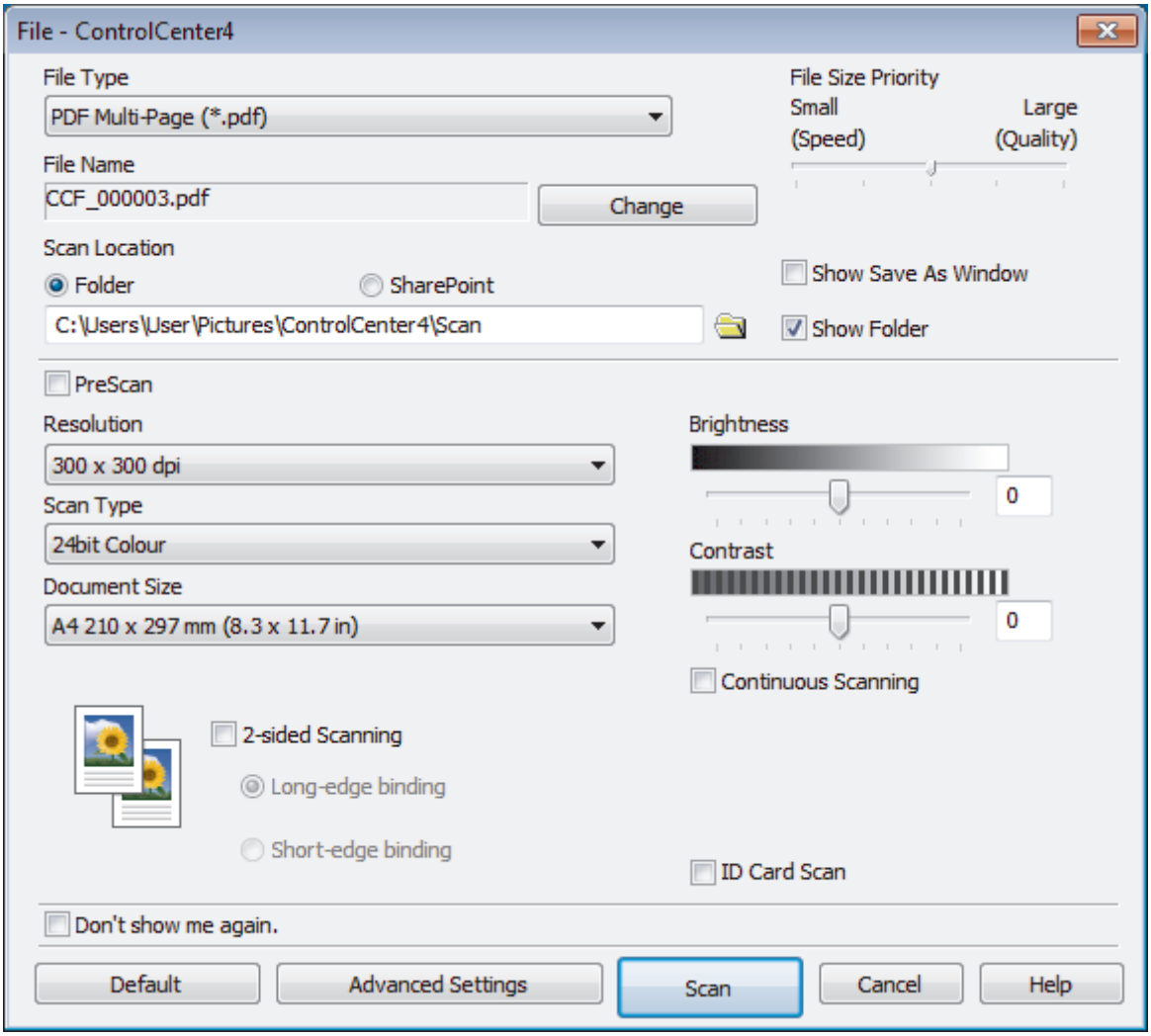

5. Select the **ID Card Scan** check box.

   The instruction dialog box appears.

6. Read the instructions on the screen, and then press **OK**.
7. Change the scan settings, such as file format, file name, scan location, resolution and colour, if needed.
8. Click **Scan**.

   The machine starts scanning one side of the identification card.

9. After the machine has scanned one side, turn over the identification card, and then click **Continue** to scan the other side.
10. Click **Finish**.

Related Information

- Scan Using ControlCenter4 Advanced Mode (Windows)

Scan to Email Attachment Using ControlCenter4 Advanced Mode (Windows)

Send a scanned document as an email attachment.

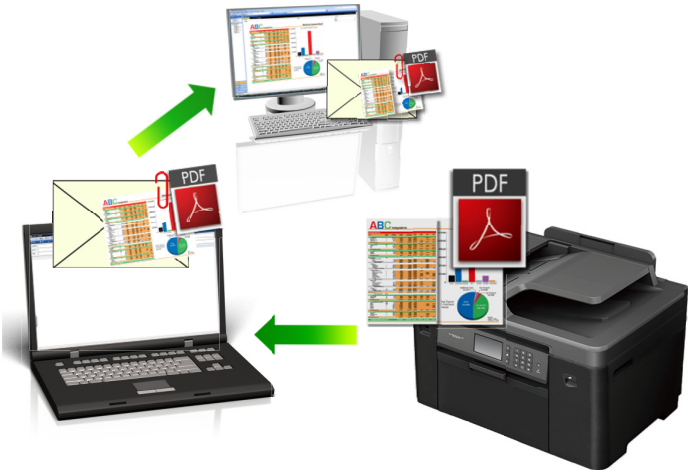

- Select **Advanced Mode** as the mode setting for ControlCenter4.
- The Scan to Email feature does not support Webmail services. Use the Scan to Image or Scan to File feature to scan a document or a picture, and then attach the scanned file to an email message.

The machine scans to your default email client.

1. Load your document.
2. Click the (**ControlCenter4**) icon in the task tray, and then click **Open**.
3. Click the **Scan** tab.

4. Click the **E-mail** button.

   The scan settings dialog box appears.

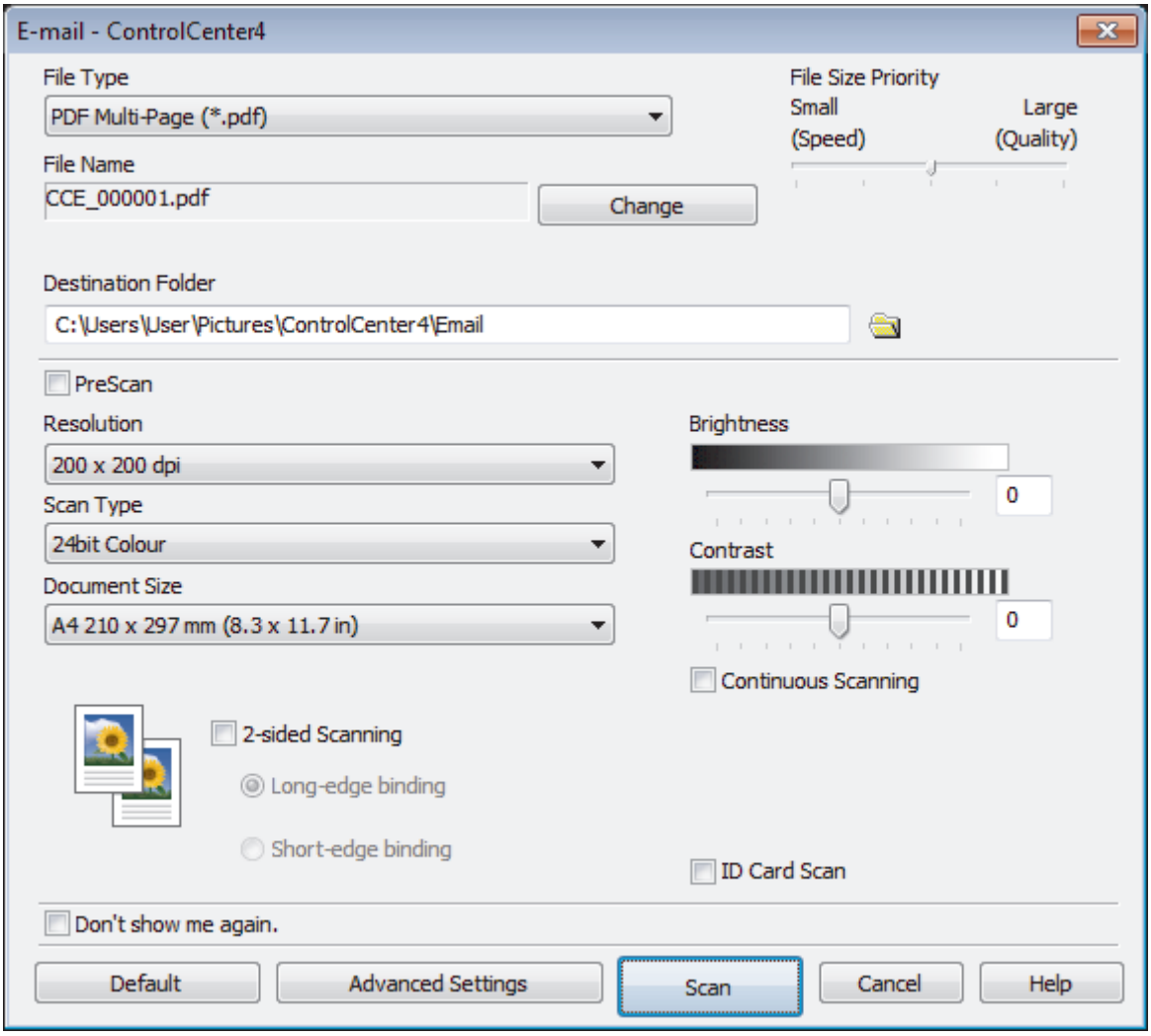

5. Change the scan settings, such as file format, file name, destination folder, resolution and colour, if needed.

- To change the file name, click **Change**.
- To change **Destination Folder**, click the folder icon.
- To preview and configure the scanned image, select the **PreScan** check box.

6. Click **Scan**.

   The machine starts scanning. Your default email application opens and the scanned image is attached to a new, blank email message.

Related Information

- Scan Using ControlCenter4 Advanced Mode (Windows)

Scan to an Editable Text File (OCR) Using ControlCenter4 Advanced Mode (Windows)

Your machine can convert characters in a scanned document to text using optical character recognition (OCR) technology. You can edit this text using your preferred text-editing application.

- Select **Advanced Mode** as the mode setting for ControlCenter4.

1. Load your document.
2. Click the (**ControlCenter4**) icon in the task tray, and then click **Open**.
3. Click the **Scan** tab.

4. Click the **OCR** button.

   The scan settings dialog box appears.

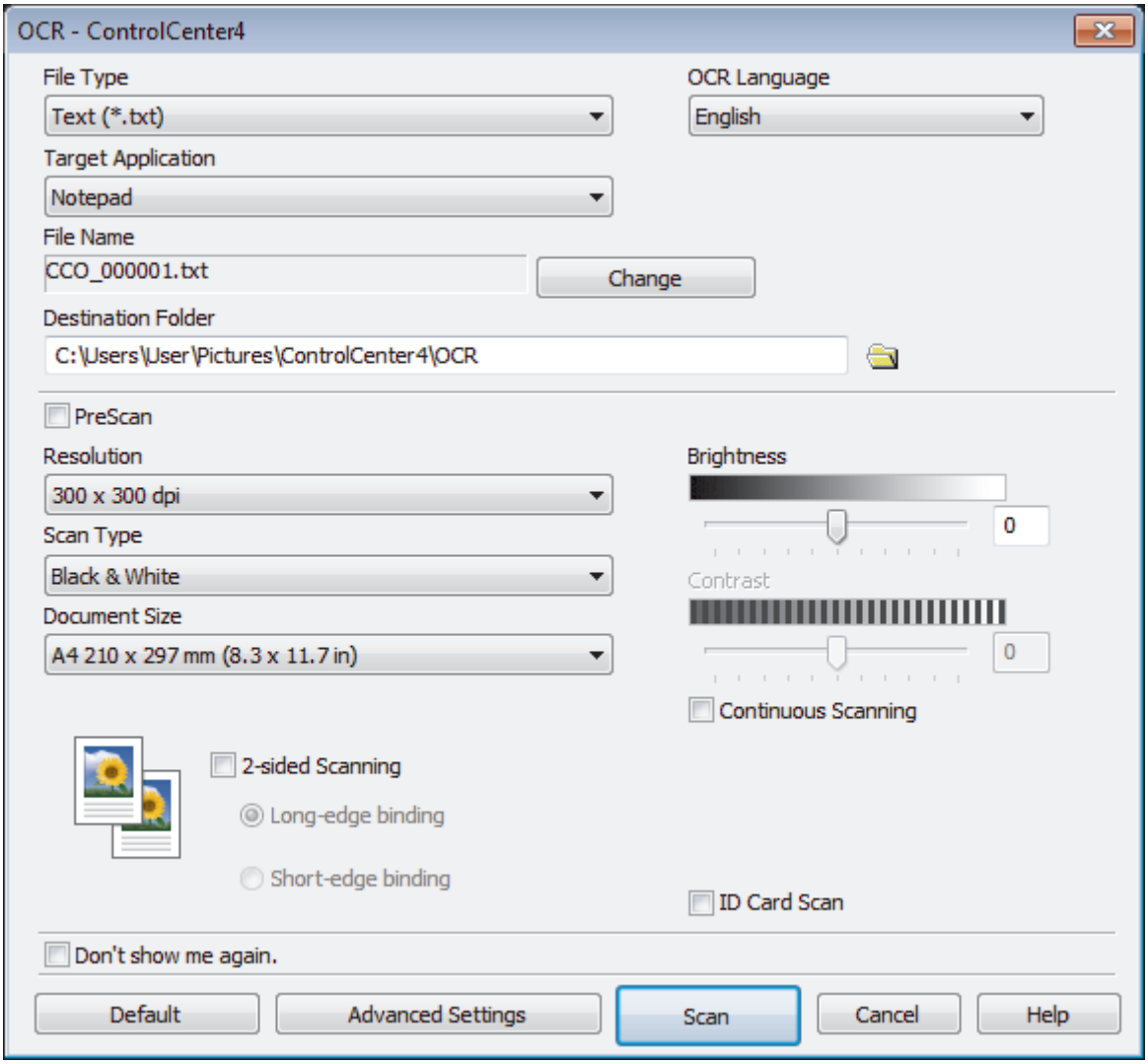

5. Change the scan settings, such as file format, file name, destination folder, resolution and colour, if needed.

- To change the file name, click **Change**.
- To change **Destination Folder**, click the folder icon.
- To preview and configure the scanned image, select the **PreScan** check box.

6. Click **Scan**.

   The machine scans the document, converts it to editable text, and then sends it to your default word processing application.

Related Information

- Scan Using ControlCenter4 Advanced Mode (Windows)

Scan to an Office File Using ControlCenter4 Advanced Mode (Windows)

Your machine can convert scanned data to a Microsoft Word, Microsoft PowerPoint, or Microsoft Excel file.

- Select **Advanced Mode** as the mode setting for ControlCenter4.
- To use this feature, your computer must be connected to the Internet.

1. Load your document.
2. Click the (**ControlCenter4**) icon in the task tray, and then click **Open**.
3. Click the **Scan** tab.

4. Click the **E-mail** or **File** button.

   The scan settings dialog box appears.
5. Click the **File Type** drop-down list, and then select the **Microsoft Office Word (*.docx)**, **Microsoft Office PowerPoint (*.pptx)**, or **Microsoft Office Excel (*.xlsx)** option.
6. Change the scan settings, if needed.
7. Click the **Scan** button.

   If a message dialog box regarding the Internet connection appears, read the information and click **OK**.

Related Information

- Scan Using ControlCenter4 Advanced Mode (Windows)

Scan Settings for ControlCenter4 Advanced Mode (Windows)

Settings	Applicable Features			
	Image	OCR	E-mail	File
File Type	Yes	Yes	Yes	Yes
Target Application	Yes	Yes	-	-
OCR Language (Available only for certain models)	-	Yes	-	-
File Name	Yes	Yes	Yes	Yes
Destination Folder	Yes	Yes	Yes	-
Scan Location	-	-	-	Yes
Show Folder	-	-	-	Yes
Show Save As Window	-	-	-	Yes
File Size Priority	Yes	-	Yes	Yes
PreScan	Yes	Yes	Yes	Yes
Resolution	Yes	Yes	Yes	Yes
Scan Type	Yes	Yes	Yes	Yes
Document Size	Yes	Yes	Yes	Yes
Brightness	Yes	Yes	Yes	Yes
Contrast	Yes	Yes	Yes	Yes
Continuous Scanning	Yes	Yes	Yes	Yes
2-sided Scanning (Available only for certain models)	Yes	Yes	Yes	Yes
Auto Crop	Yes	-	Yes	Yes
ID Card Scan	Yes	Yes	Yes	Yes
Advanced Settings	Yes	Yes	Yes	Yes
Default	Yes	Yes	Yes	Yes

File Type

Select the file type you want to use for the scanned data.

For **Image**, **E-mail** and **File**:

- **Windows Bitmap (*.bmp)**
- **JPEG (*.jpg)** (recommended for most users when scanning pictures)
- **TIFF Single-Page (*.tif)**
- **TIFF Multi-Page (*.tif)**
- **Portable Network Graphics (*.png)**
- **PDF Single-Page (*.pdf)** (recommended for scanning and sharing documents)
- **PDF Multi-Page (*.pdf)** (recommended for scanning and sharing documents)
- **PDF/A Single-Page (*.pdf)** (recommended for scanning and sharing documents)
- **PDF/A Multi-Page (*.pdf)** (recommended for scanning and sharing documents)
- **High Compression PDF Single-Page (*.pdf)**
- **High Compression PDF Multi-Page (*.pdf)**
- **Secure PDF Single-Page (*.pdf)**
- **Secure PDF Multi-Page (*.pdf)**
- **Searchable PDF Single-Page (*.pdf)**

- **Searchable PDF Multi-Page (*.pdf)**
- **XML Paper Specification (*.xps)** (the XML Paper Specification is available for Windows Vista, Windows 7, Windows 8 and Windows 10, or when using applications that support XML Paper Specification files)

For **OCR**:

- **Text (*.txt)**
- **HTML 3.2 (*.htm)**
- **HTML 4.0 (*.htm)**
- **Searchable PDF Single-Page (*.pdf)**
- **Searchable PDF Multi-Page (*.pdf)**
- **WordPad (*.rtf)**
- **RTF Word 2000 (*.rtf)**
- **WordPerfect 9, 10 (*.wpd)**
- **Microsoft Excel 2003, XP (*.xls)**

For **E-mail** and **File**:

- **Microsoft Office Word (*.docx)** (Available only for certain models)
- **Microsoft Office PowerPoint (*.pptx)** (Available only for certain models)
- **Microsoft Office Excel (*.xlsx)** (Available only for certain models)

Target Application

Select the destination application from the drop-down list.

OCR Language

Set the optical character recognition (OCR) language to match the language of the scanned document's text (Available only for certain models).

File Name

Click **Change** to change the file name's prefix.

Destination Folder

Click the folder icon to browse and select the folder where you want to save your scanned documents.

Scan Location

Select the **Folder** or **SharePoint** radio button to specify the destination where you want to save your scanned documents.

Show Folder

Select this option to automatically display the destination folder after scanning.

Show Save As Window

Select this option to specify the scanned image's destination every time you scan.

File Size Priority

Adjust the data compression ratio of the scanned image. Change the file size by moving the **File Size Priority** slider to the right or left.

PreScan

Select **PreScan** to preview your image and crop unwanted portions before scanning.

Resolution

Select a scanning resolution from the **Resolution** drop-down list. Higher resolutions take more memory and transfer time, but produce a finer scanned image.

Scan Type

Select from a range of scan colour depths.

- **Auto**

  Use for any type of document. This mode automatically picks an appropriate colour depth for the document.
- **Black & White**

  Use for text or line art images.
- **Grey (Error Diffusion)**

  Use for photographic images or graphics. (Error Diffusion is a method for creating simulated grey images without using true grey dots. Black dots are put in a specific pattern to give a grey appearance.)
- **True Grey**

  Use for photographic images or graphics. This mode is more accurate because it uses up to 256 shades of grey.
- **24bit Colour**

  Use to create an image with the most accurate colour reproduction. This mode uses up to 16.8 million colours to scan the image, but it requires the most memory and has the longest transfer time.

Document Size

Select the exact size of your document from the **Document Size** drop-down list.

- If you select the **1 to 2 (A4)** option, the scanned image will be divided into two A5-size documents.

Brightness

Set the **Brightness** level by dragging the slider to the right or left to lighten or darken the image. If the scanned image is too light, set a lower brightness level and scan the document again. If the image is too dark, set a higher brightness level and scan the document again. You can also type a value into the field to set the **Brightness** level.

Contrast

Increase or decrease the **Contrast** level by moving the slider to the right or left. An increase emphasises dark and light areas of the image, while a decrease reveals more details in grey areas. You can also type a value into the field to set the **Contrast** level.

Continuous Scanning

Select this option to scan multiple pages. After a page is scanned, select either continue scanning or finish.

2-sided Scanning

Select this check box to scan both sides of the document. When using the Automatic 2-sided Scan feature, you must select the **Long-edge binding** or **Short-edge binding** option, depending on the layout of your original, to make sure the data file you create appears correctly. (Available only for certain models)

Auto Crop

Scan multiple documents placed on the scanner glass. The machine will scan each document and create separate files or a single multi-page file.

ID Card Scan

Select this check box to scan both sides of an identification card onto one page.

Advanced Settings

Configure advanced settings by clicking the **Advanced Settings** button in the scan settings dialog box.

- **Remove Bleed-through / Pattern**
  - **Remove Background Colour**

    Remove the base colour of documents to make the scanned data more legible.
- **Rotate Image**

  Rotate the scanned image.
- **Skip Blank Page**

  Remove the document's blank pages from the scanning results. (Available only for certain models)

- **Display Scanning Results**

  Show the numbers of total pages saved and blank pages skipped on your computer screen. (Available only for certain models)

ADF Auto Deskew

When scanning the document from the ADF, the machine corrects skewing of the document automatically. (Available only for certain models)

Default

Select this option to restore all settings to their factory setting values.

Related Information

- Scan Using ControlCenter4 Advanced Mode (Windows)

Scan Using Nuance™ PaperPort™ 14 or Other Windows Applications

You can use the Nuance™ PaperPort™ 14 application for scanning.

- To download the Nuance™ PaperPort™ 14 application, click (**Brother Utilities**), select **Do More** in the left navigation bar, and then click **PaperPort**.
- Nuance™ PaperPort™ 14 supports Windows Vista (SP2 or greater), Windows 7, Windows 8, Windows 8.1, Windows 10 Home, Windows 10 Pro, Windows 10 Education and Windows 10 Enterprise.
- For detailed instructions on using each application, click the application's **Help** menu, and then click **Getting Started Guide** in the **Help** ribbon.

The instructions for scanning in these steps are for PaperPort™ 14. For other Windows applications, the steps will be similar. PaperPort™ 14 supports both TWAIN and WIA drivers; the TWAIN driver (recommended) is used in these steps.

- Depending on the model of your machine, Nuance™ PaperPort™ 14 may not be included. If it is not included, you can use other software applications that support scanning.

1. Load your document.
2. Start PaperPort™ 14.

   Do one of the following:

   - Windows Vista and Windows 7

     Using your computer, click (**Start**) > **All Programs** > **Nuance PaperPort 14** > **PaperPort**.

   - Windows 8

     Click (**PaperPort**).

   - Windows 10

     Click > **All apps** > **Nuance PaperPort 14** > **PaperPort**.

3. Click the **Desktop** menu, and then click **Scan Settings** in the **Desktop** ribbon.

   The **Scan or Get Photo** panel appears on the left side of the screen.
4. Click **Select**.
5. From the available Scanners list, select **TW-Brother MFC-XXXX** or **TW-Brother MFC-XXXX LAN** (where MFC-XXXX is the model name of your machine). To use the WIA driver, select the Brother driver that has "WIA" as the prefix.
6. Select the **Display scanner dialog box** check box in the **Scan or Get Photo** panel.
7. Click **Scan**.

   The Scanner Setup dialog box appears.

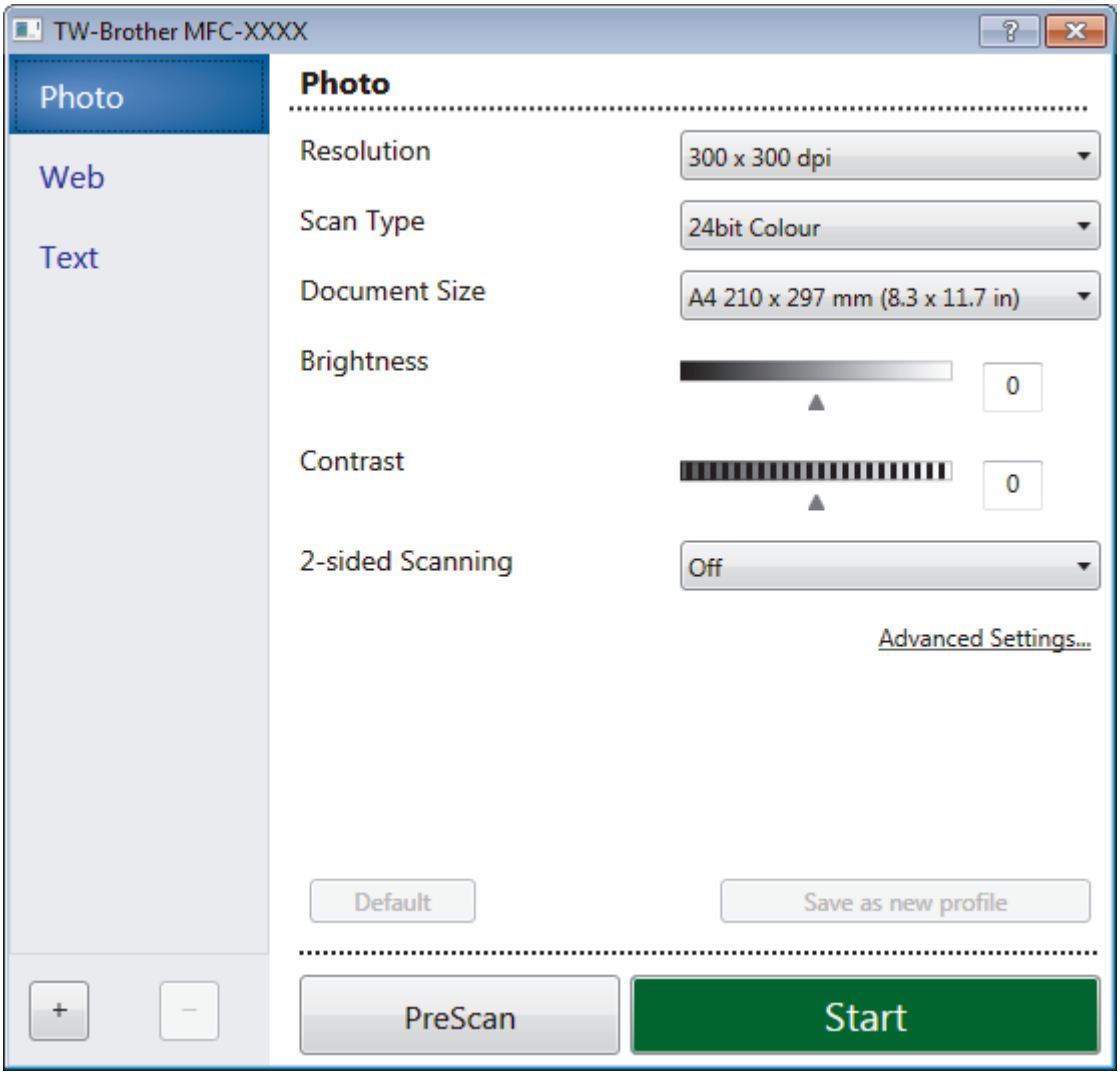

8. Adjust the settings in the Scanner Setup dialog box, if needed.
9. Click the **Document Size** drop-down list, and then select your document size.

To scan both sides of the document (MFC-J3930DW):
Automatic 2-sided scan is available only when using the ADF.
You cannot use PreScan to preview an image.

10. Click **PreScan** if you want to preview your image and crop unwanted portions before scanning.
11. Click **Start**.
    The machine starts scanning.

Related Information

- Scan from Your Computer (Windows)
- TWAIN Driver Settings (Windows)

TWAIN Driver Settings (Windows)

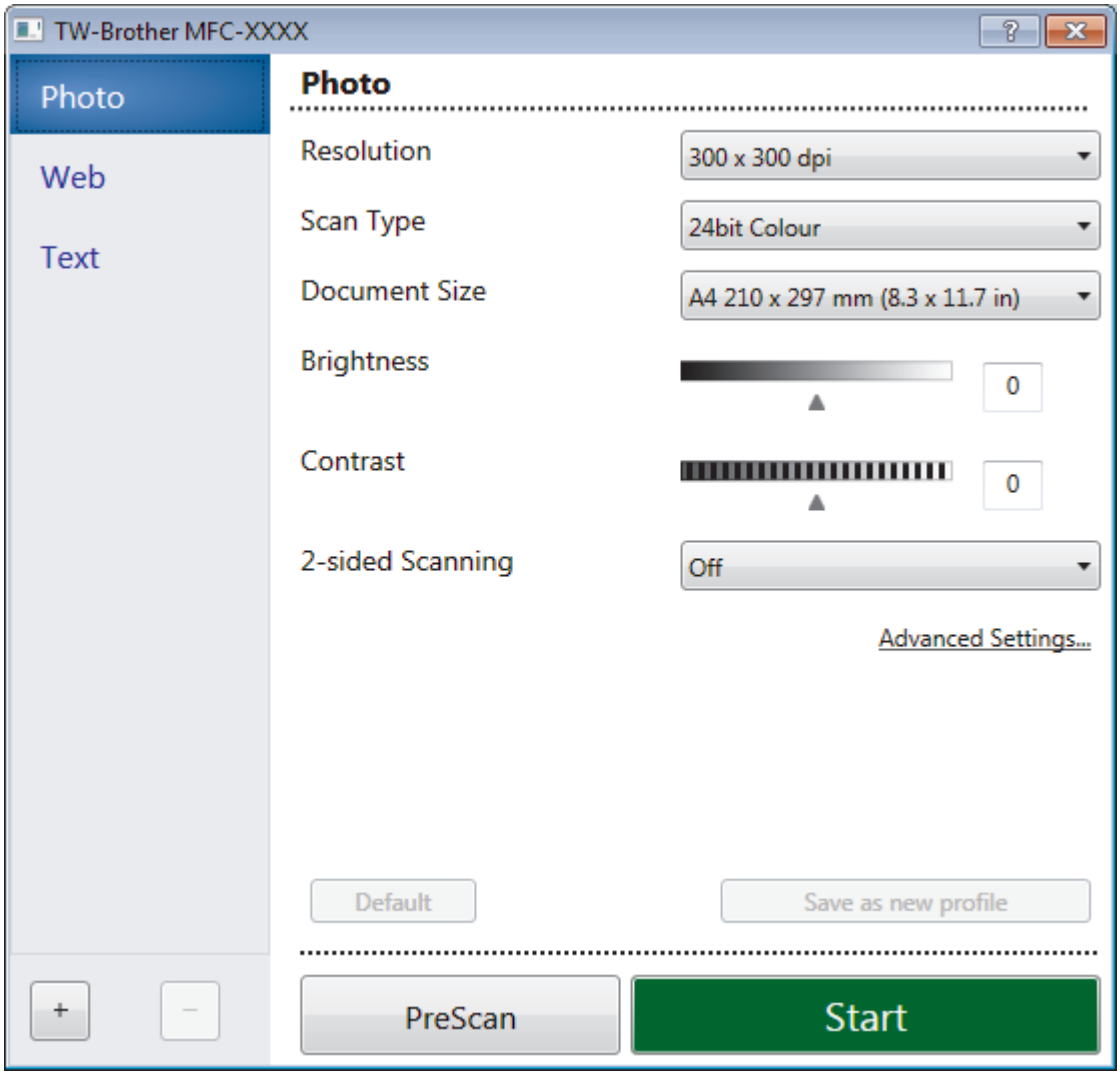

- Note that the item names and assignable values will vary depending on the machine.
- The **Brightness** option is available only when selecting the **Black & White**, **Gray (Error Diffusion)**, **True Grey**, or **24bit Colour** options from the **Scan Type** settings.
- The **Contrast** option is available only when selecting the **Gray (Error Diffusion)**, **True Grey**, or **24bit Colour** options from the **Scan Type** settings.

1. **Scan**

   Select the **Photo**, **Web**, or **Text** option depending on the type of document you want to scan.

Scan (Image Type)		Resolution	Scan Type
Photo	Use for scanning photo images.	300 x 300 dpi	**24bit Colour**
Web	Use for attaching the scanned image to web pages.	100 x 100 dpi	**24bit Colour**
Text	Use for scanning text documents.	200 x 200 dpi	**Black & White**

2. **Resolution**

   Select a scanning resolution from the **Resolution** drop-down list. Higher resolutions take more memory and transfer time, but produce a finer scanned image.

3. **Scan Type**

   Select from a range of scan colour depths.

   - **Black & White**

     Use for text or line art images.

   - **Gray (Error Diffusion)**

     Use for photographic images or graphics. (Error Diffusion is a method for creating simulated grey images without using true grey dots. Black dots are put in a specific pattern to give a grey appearance.)

   - **True Grey**

     Use for photographic images or graphics. This mode is more accurate because it uses up to 256 shades of grey.

   - **24bit Colour**

     Use to create an image with the most accurate colour reproduction. This mode uses up to 16.8 million colours to scan the image, but it requires the most memory and has the longest transfer time.

4. **Document Size**

   Select the exact size of your document from a selection of preset scan sizes.

   If you select **Custom**, the **Custom Document Size** dialog box appears and you can specify the document size.

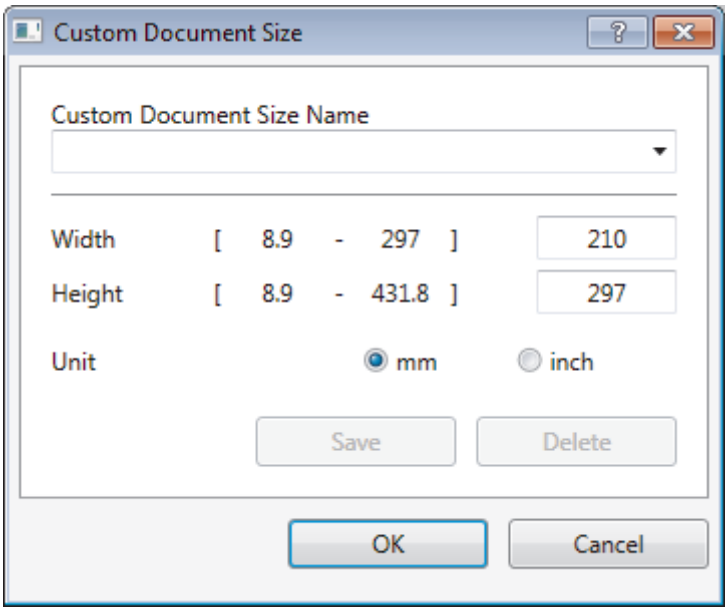

5. **Brightness**

   Set the **Brightness** level by dragging the slider to the right or left to lighten or darken the image. If the scanned image is too light, set a lower brightness level and scan the document again. If the image is too dark, set a higher brightness level and scan the document again. You can also type a value in the field to set the brightness level.

6. **Contrast**

   Increase or decrease the **Contrast** level by moving the slider to the right or left. An increase emphasises dark and light areas of the image, while a decrease reveals more details in grey areas. You can also type a value in the field to set the contrast level.

7. **2-sided Scanning**

   Scan both sides of the document. When using the Automatic 2-sided Scan feature, you must select the **Long-edge binding** or **Short-edge binding** option from the **2-sided Scanning** drop-down list, so when you turn the pages, they are facing the way you want. (Available only for certain models)

8. **Auto Crop**

   Scan multiple documents placed on the scanner glass. The machine will scan each document and create separate files or a single multi-page file.

9. **Advanced Settings**

   Configure advanced settings by clicking the **Advanced Settings** button in the Scanner Setup dialog box.

- **Paper**
  - **Auto Deskew**

    Set the machine to correct document skewing automatically as the pages are scanned from the ADF.
  - **Rotate Image**

    Rotate the scanned image.
- **Enhancement**
  - **Background Processing**
    - **Remove Bleed-through / Pattern**

      Prevent bleed-through.
    - **Remove Background Colour**

      Remove the base colour of documents to make the scanned data more legible.
  - **Colour Drop**

    Select a colour to remove from the scanned image.
  - **Boldface Formatting**

    Emphasise the characters of the original by making them bold.
  - **Blurred Character Correction**

    Correct the broken or incomplete characters of the original to make them easier to read.
  - **Edge Emphasis**

    Make the characters of the original sharper.
  - **Reduce Noise**

    Improve and enhance the quality of your scanned images with this selection. The **Reduce Noise** option is available when selecting the **24bit Colour** option and the **300 x 300 dpi**, **400 x 400 dpi**, or **600 x 600 dpi** scan resolution.
- **Paper Handling**
  - **Edge Fill**

    Fill in the edges on four sides of the scanned image using the selected colour and range.
  - **Skip Blank Page**

    Remove the document's blank pages from the scanning results. (Available only for certain models)
  - **Continuous Scan**

    Select this option to scan multiple pages. After a page is scanned, select either continue scanning or finish.

Related Information

- Scan Using Nuance™ PaperPort™ 14 or Other Windows Applications

Scan Using Windows Photo Gallery or Windows Fax and Scan

Windows Photo Gallery or Windows Fax and Scan applications are other options that you can use for scanning.

- These applications use the WIA scanner driver.
- If you want to crop a portion of a page after pre-scanning the document, you must scan using the scanner glass (also called the flatbed).

1. Load your document.
2. Launch your scanning application. Do one of the following:
   - (Windows Photo Gallery)

     Click **File** > **Import from Camera or Scanner**.
   - (Windows Fax and Scan)

     Click **File** > **New** > **Scan**.
3. Select the scanner you want to use.
4. Click **Import** or **OK**.

   The **New Scan** dialog box appears.

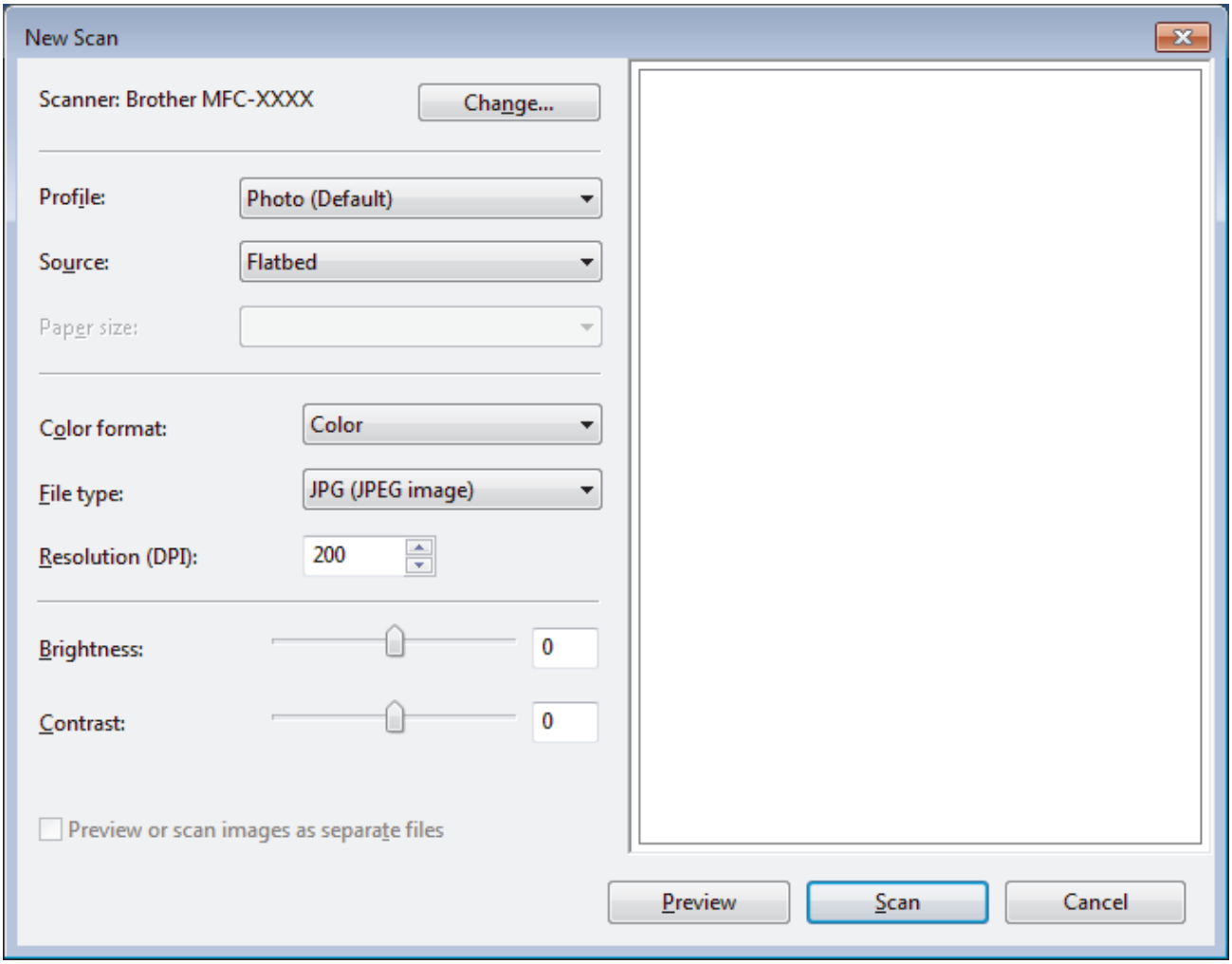

5. Adjust the settings in the Scanner Setup dialog box, if needed.

   The scanner resolution can be set to a maximum of 1200 dpi. If you want to scan at higher resolutions, use the **Scanner Utility** software of **Brother Utilities**.

   If your machine supports 2-sided Scan and you want to scan both sides of your document, select **Feeder (Scan both sides)** as **Source**.
6. Click **Scan**.

The machine starts scanning the document.

Related Information

- Scan from Your Computer (Windows)
- WIA Driver Settings (Windows)

WIA Driver Settings (Windows)

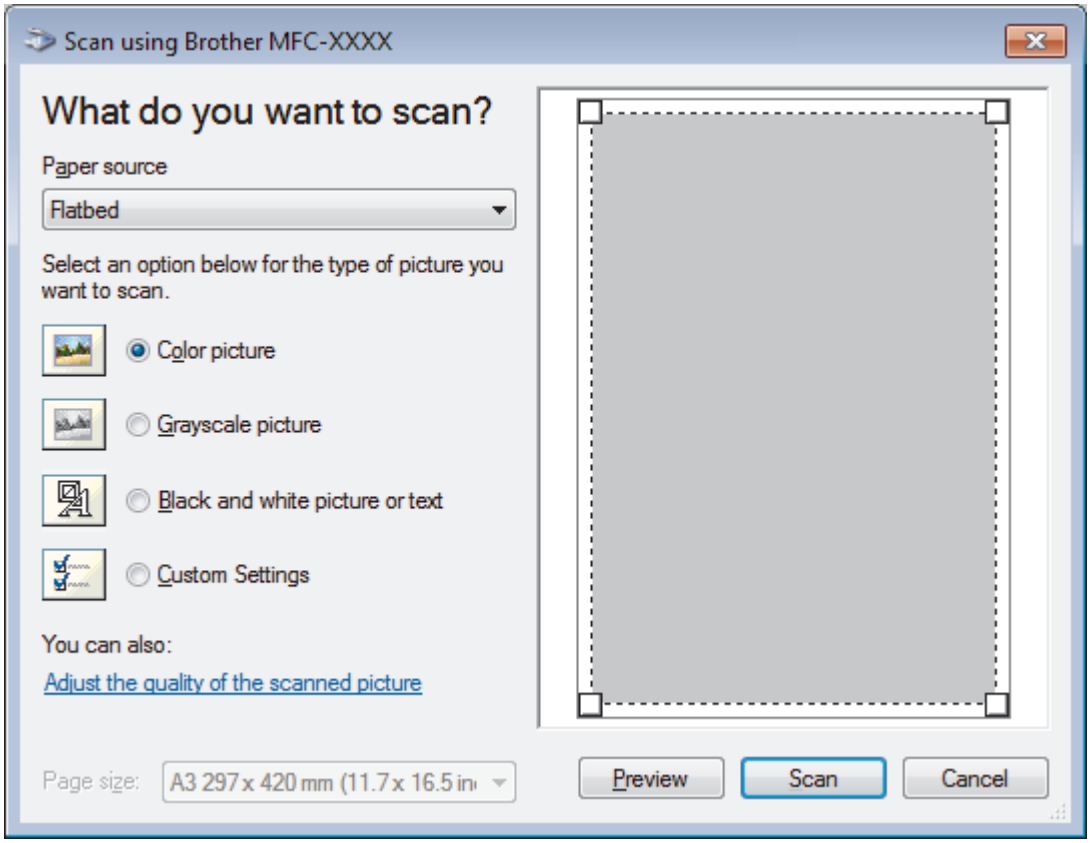

Paper source

Select the **Document Feeder** or **Flatbed** option from the drop-down list.

Picture Type (Image Type)

Select **Color picture**, **Grayscale picture**, **Black and white picture or text** , or **Custom Settings** for the type of document you want to scan.

To change advanced settings, click the **Adjust the quality of the scanned picture** link.

Page size

The **Page size** option is available if you select the **Document Feeder** as the **Paper source** option.

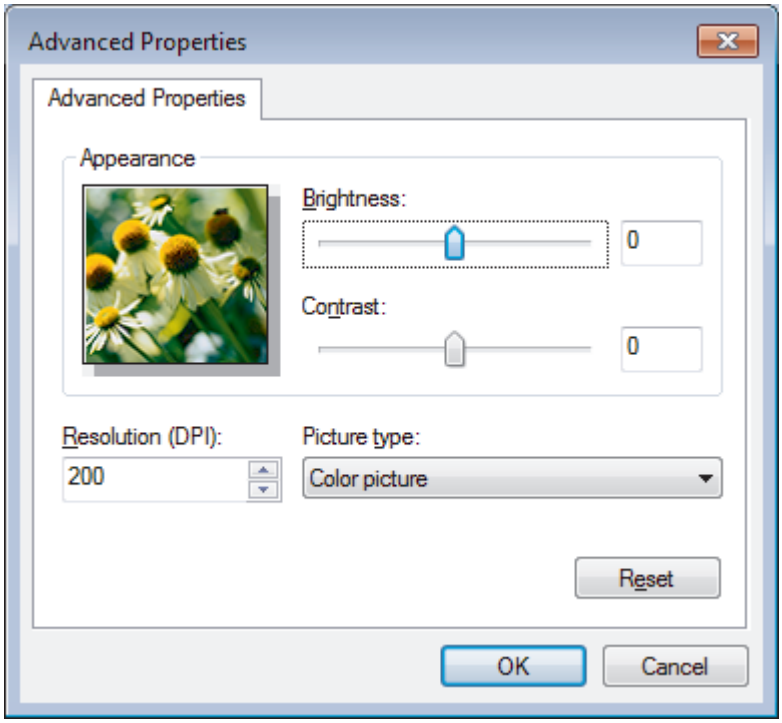

Brightness

Set the **Brightness** level by dragging the slider to the right or left to lighten or darken the image. If the scanned image is too light, set a lower brightness level and scan the document again. If the image is too dark, set a higher brightness level and scan the document again.

Contrast

Increase or decrease the **Contrast** level by moving the slider to the right or left. An increase emphasises dark and light areas of the image, while a decrease reveals more details in grey areas. You can also type a value in the field to set the contrast level.

Resolution (DPI)

Select a scanning resolution from the **Resolution (DPI)** list. Higher resolutions take more memory and transfer time, but produce a finer scanned image.

Related Information

- Scan Using Windows Photo Gallery or Windows Fax and Scan

Install BookScan Enhancer and Whiteboard Enhancer (Windows)

BookScan Enhancer and Whiteboard Enhancer are image processing applications. BookScan Enhancer can automatically correct images scanned from books. Whiteboard Enhancer can clean up and enhance text and images in photos taken of a whiteboard.

These applications are not available for Windows Server series.

- The machine must be turned on and connected to the computer.
- The computer must be connected to the Internet.
- You must be logged on with Administrator access privileges.

1. Click (**Brother Utilities**).
2. Select your machine from the drop-down list.
3. Select **Do More** in the left navigation bar.
4. Click **BookScan&WhiteBoard Suite** and follow the on-screen instructions to install.

Related Information

- Scan from Your Computer (Windows)

Scan from Your Computer (Mac)

There are several ways you can use your Mac to scan photos and documents on your Brother machine. Use the software applications provided by Brother or your favourite scanning application.

- Scan Using ControlCenter2 (Mac)
- Scan Using TWAIN-Compliant Applications (Mac)

Scan Using ControlCenter2 (Mac)

Use Brother's ControlCenter software to scan photos and save them as JPEGs, PDFs, or other file formats.

- Scan Using ControlCenter2 (Mac)
- Save Scanned Data to a Folder as a PDF File Using ControlCenter2 (Mac)
- Scan Both Sides of a Document Automatically Using ControlCenter2 (Mac)
- Scan Both Sides of an ID Card Using ControlCenter2 (Mac)
- Scan to Email Attachment Using ControlCenter2 (Mac)
- Scan to an Editable Text File (OCR) Using ControlCenter2 (Mac)
- Scan to an Office File Using ControlCenter2 (Mac)
- Scan Settings for ControlCenter2 (Mac)

Scan Using ControlCenter2 (Mac)

Send scanned photos or graphics directly to your computer.

1. Load your document.
2. In the **Finder** menu bar, click **Go** > **Applications** > **Brother**, and then double-click the (**ControlCenter**) icon.
   The **ControlCenter2** screen appears.
3. Click the **SCAN** tab.

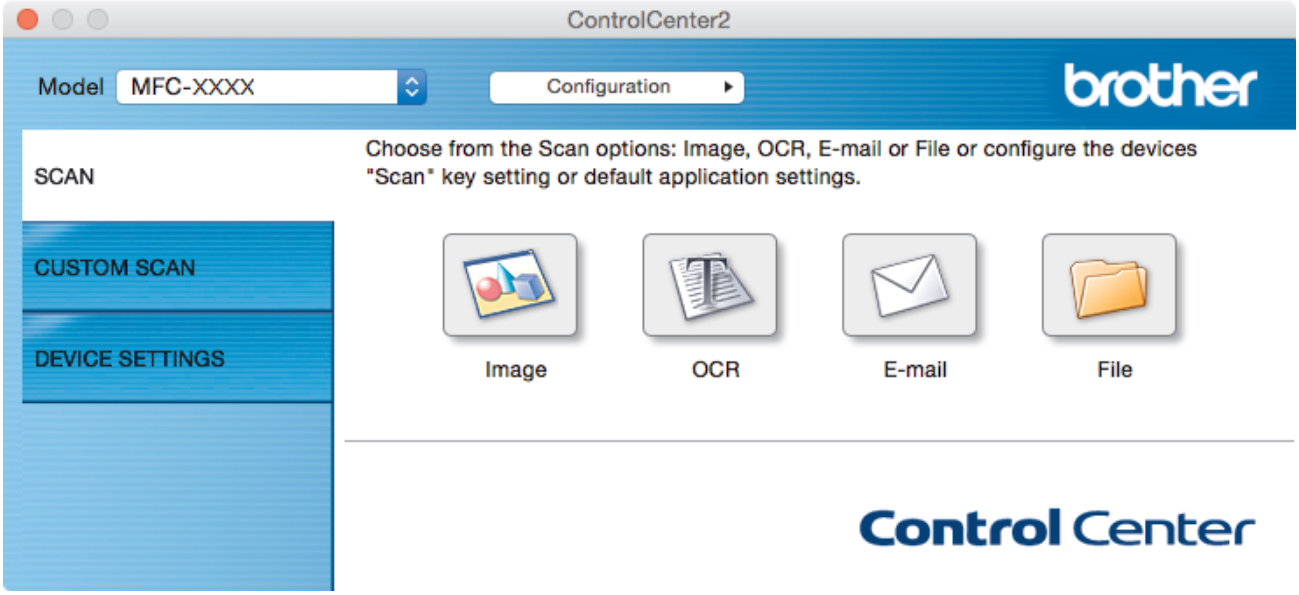

4. Click the **Image** button.
   The scan settings dialog box appears.

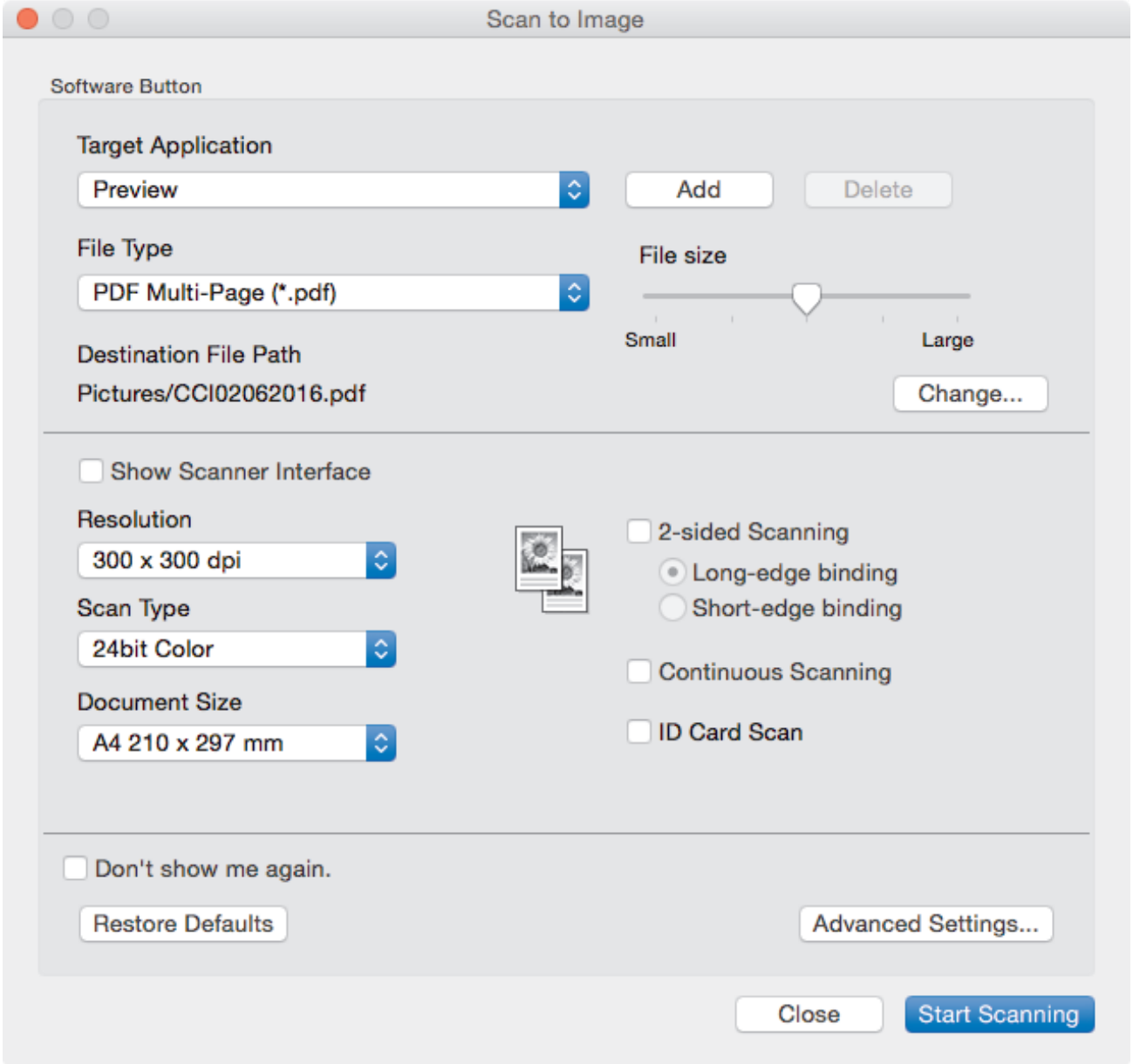

5. Change the scan settings, such as file format, file name, destination file path, resolution and colour, if needed.

To change the file name or destination file path, click **Change**.

6. Click the **Start Scanning** button.

   The machine starts scanning. The scanned image opens in the application you have selected.

Related Information

- Scan Using ControlCenter2 (Mac)

Save Scanned Data to a Folder as a PDF File Using ControlCenter2 (Mac)

1. Load your document.
2. In the **Finder** menu bar, click **Go** > **Applications** > **Brother**, and then double-click the (**ControlCenter**) icon.
   The **ControlCenter2** screen appears.
3. Click the **SCAN** tab.

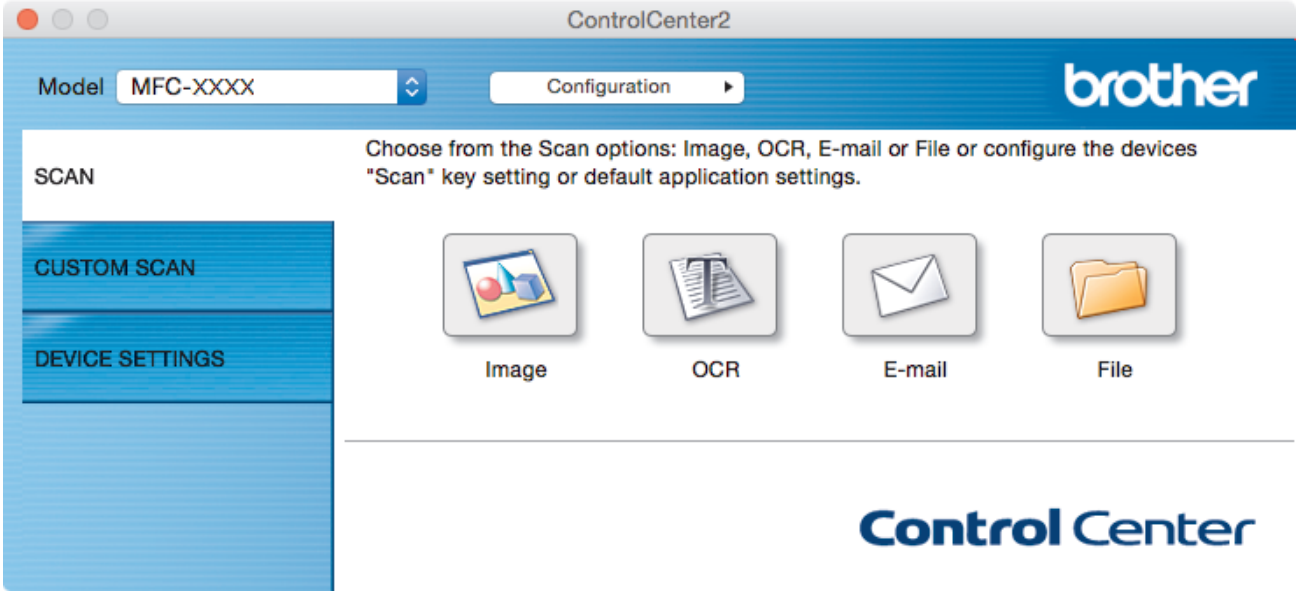

4. Click the **File** button.
   The scan settings dialog box appears.

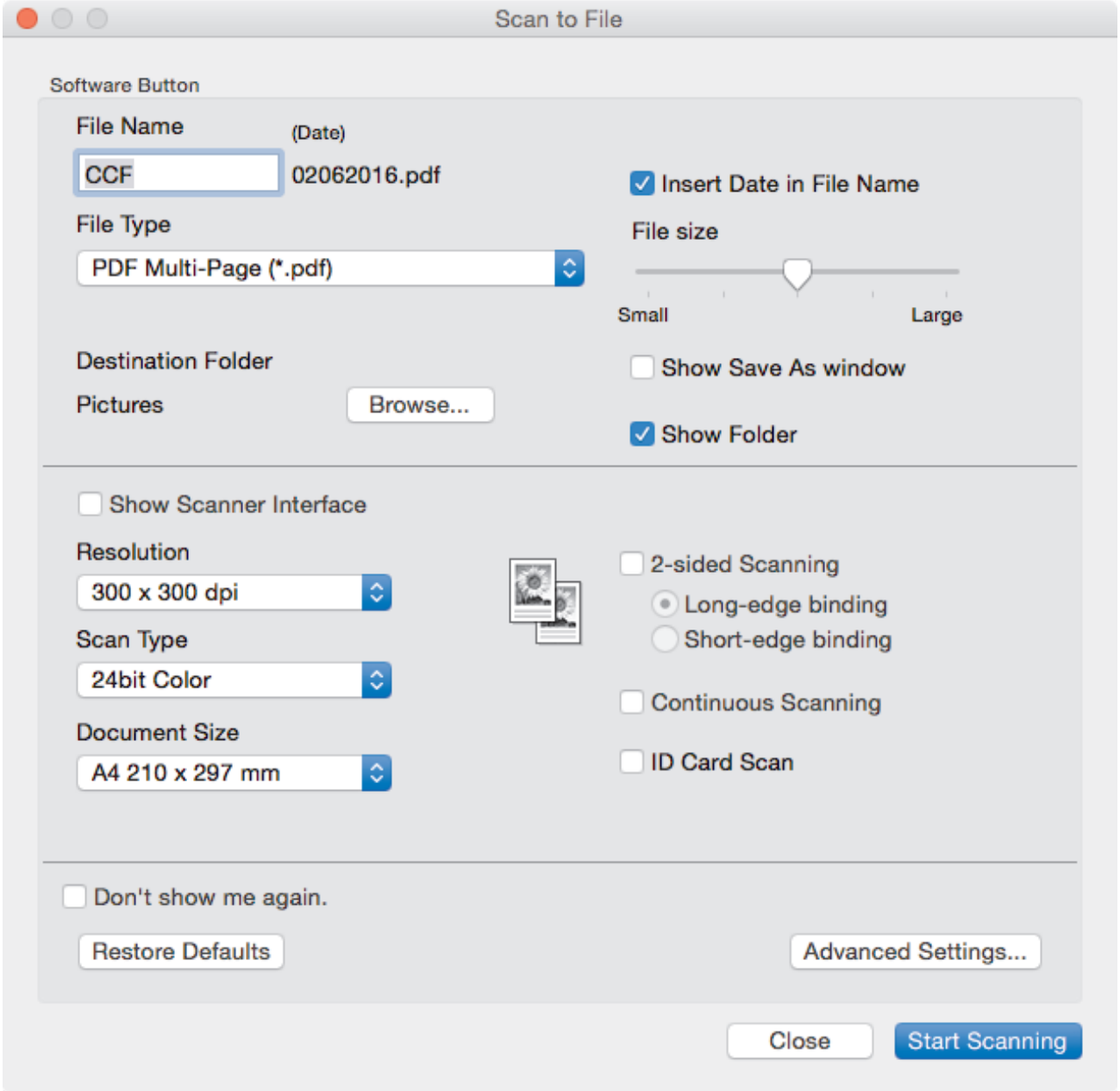

5. Click the **File Type** pop-up menu, and then select a PDF file.

To save the document as a password-protected PDF, select **Secure PDF (*.pdf)** from the **File Type** pop-up menu, type your password in the **Password** and **Re-type Password** fields, and then click **OK**.

6. Change the scan settings, such as file name, destination folder, resolution and colour, if needed.
7. Click the **Start Scanning** button.

   The machine starts scanning. The file will be saved in the folder you selected.

Related Information

- Scan Using ControlCenter2 (Mac)

Scan Both Sides of a Document Automatically Using ControlCenter2 (Mac)

Related Models: MFC-J3930DW

1. Load documents in the ADF.

To scan both sides of a document automatically, you must use the ADF, not the flatbed scanner glass.

2. In the **Finder** menu bar, click **Go** > **Applications** > **Brother**, and then double-click the (**ControlCenter**) icon.
   The **ControlCenter2** screen appears.
3. Click the **SCAN** tab.

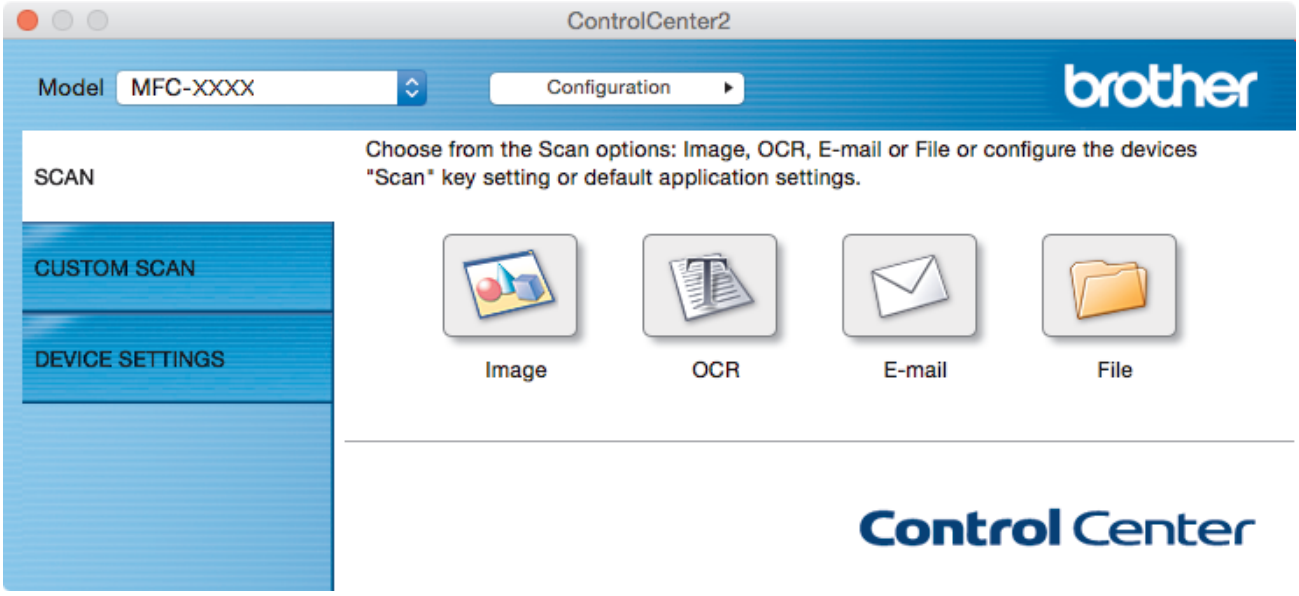

4. Click the scan type button (**Image**, **OCR**, **E-mail**, or **File**) you want to use.
   The scan settings dialog box appears.
5. Select the **2-sided Scanning** check box.
6. Select the **Long-edge binding** or **Short-edge binding** option, depending on the Original layout.
7. Configure other settings, if needed.
8. Click the **Start Scanning** button.
   The machine starts scanning.

You have now changed the default settings for your selected Scan to action. These settings will be used the next time this scan type (**Image**, **OCR**, **E-mail**, or **File**) is clicked for this action.

Related Information

- Scan Using ControlCenter2 (Mac)

Scan Both Sides of an ID Card Using ControlCenter2 (Mac)

1. Place an ID card on the scanner glass.
2. In the **Finder** menu bar, click **Go** > **Applications** > **Brother**, and then double-click the (**ControlCenter**) icon.
   The **ControlCenter2** screen appears.
3. Click the **SCAN** tab.

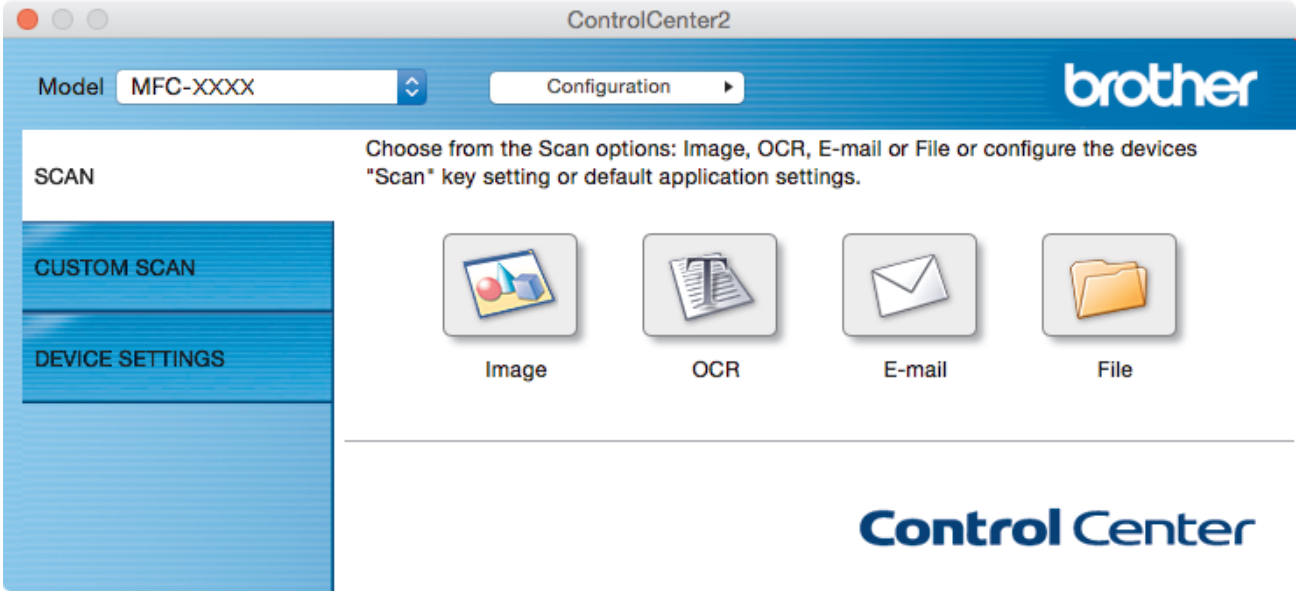

4. Click the **File** button.
   The scan settings dialog box appears.

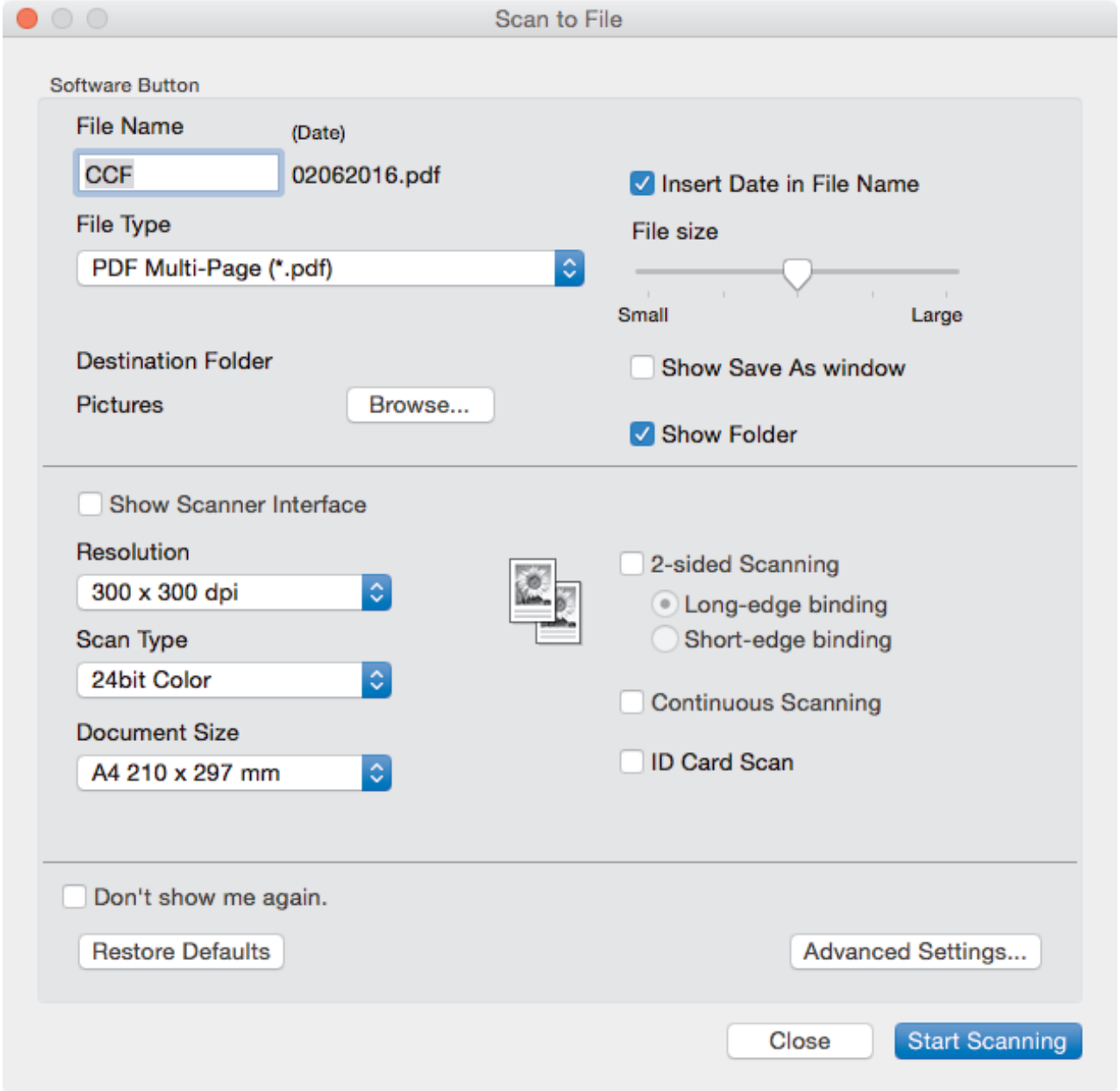

5. Select the **ID Card Scan** check box.
   The instruction dialog box appears.
6. Read the instructions on the screen, and then click **OK**.
7. Configure other settings, if needed.
8. Click the **Start Scanning** button.
   The machine starts scanning one side of the identification card.
9. After the machine has scanned one side, turn over the identification card, and then click **Continue** to scan the other side.
10. Click **Finish**.

Related Information

- Scan Using ControlCenter2 (Mac)

Scan to Email Attachment Using ControlCenter2 (Mac)

Send a scanned document as an email attachment.

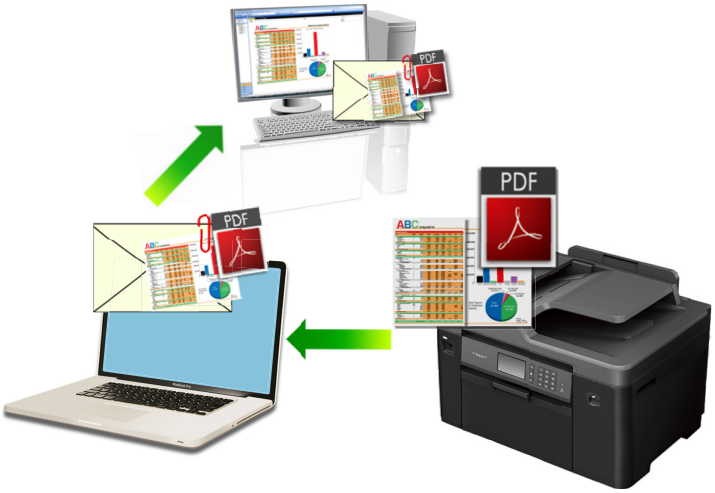

The Scan to Email feature does not support Webmail services. Use the Scan to Image or Scan to File feature to scan a document or a picture, and then attach the scanned file to an email message.

1. Load your document.
2. In the **Finder** menu bar, click **Go** > **Applications** > **Brother**, and then double-click the (**ControlCenter**) icon.

   The **ControlCenter2** screen appears.
3. Click the **SCAN** tab.

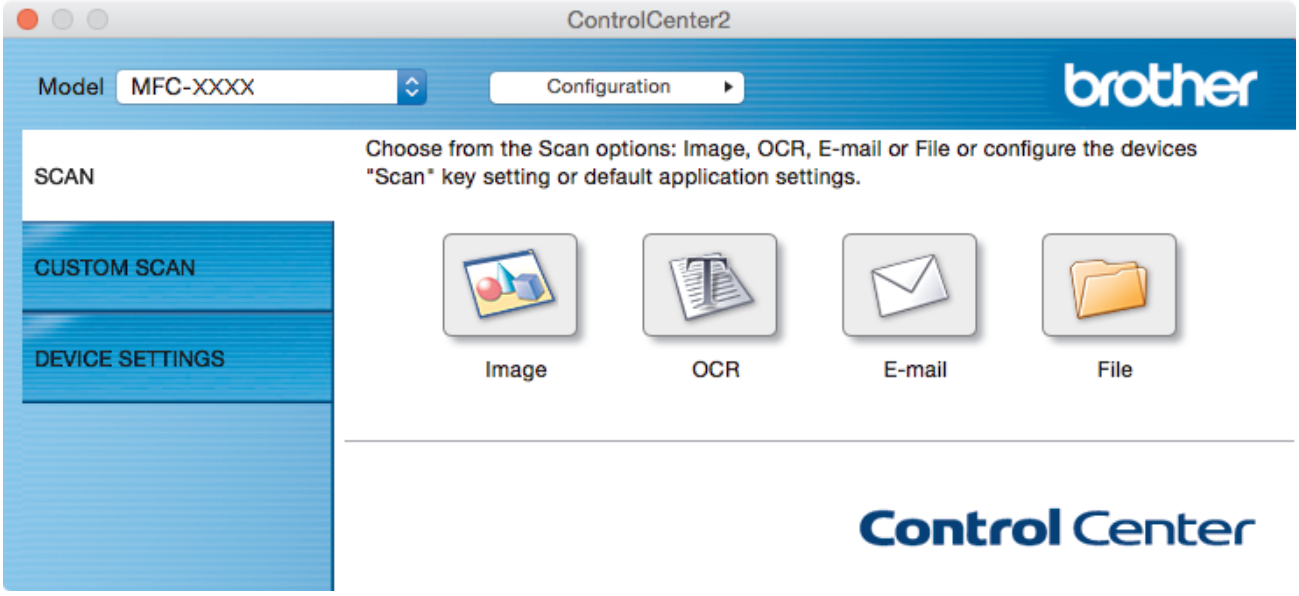

4. Click the **E-mail** button.

   The scan settings dialog box appears.

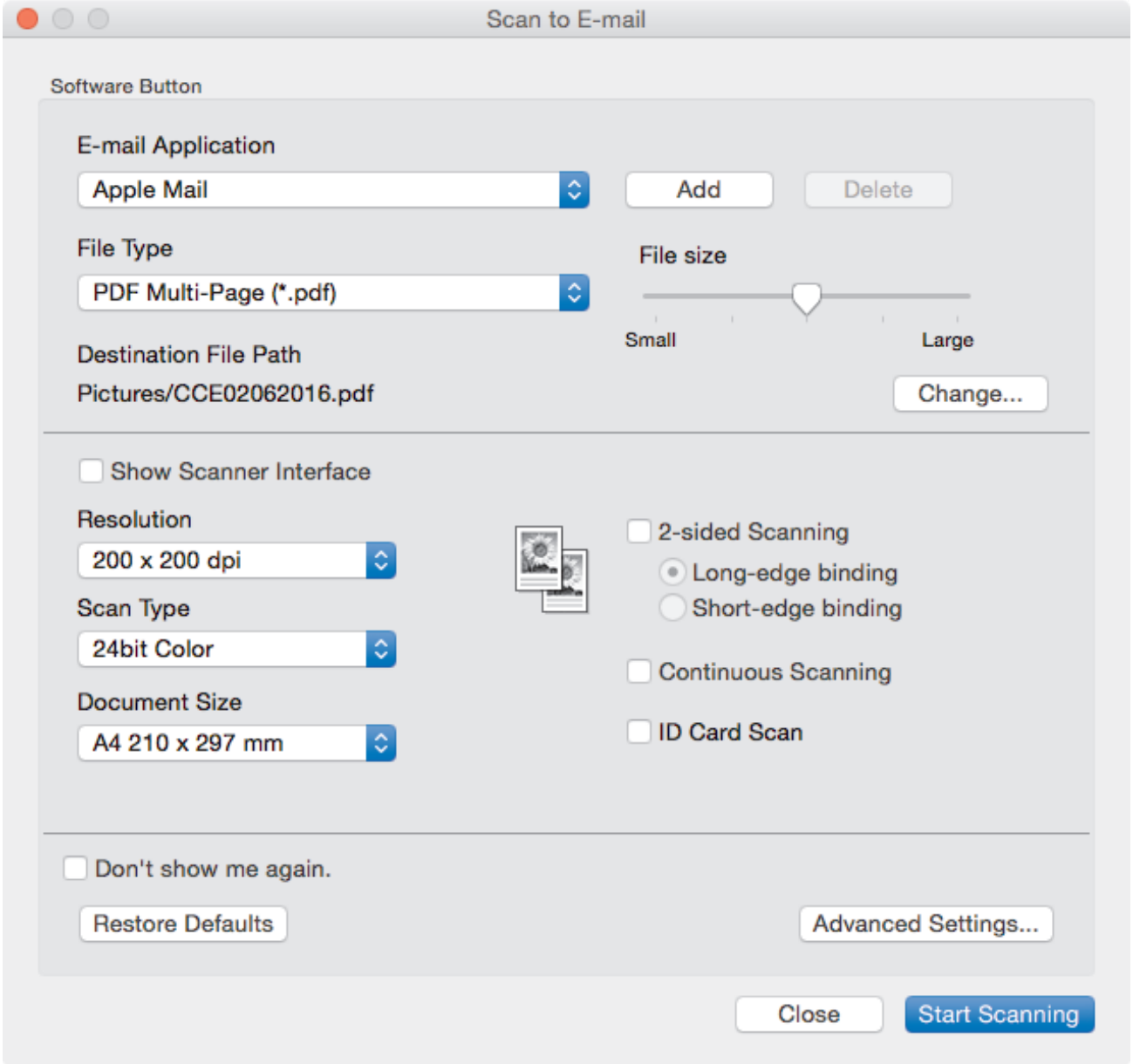

5. Change the scan settings, such as file format, file name, destination file path, resolution and colour, if needed.

To change the file name or destination file path, click **Change**.

6. Click the **Start Scanning** button.

   The machine starts scanning. Your default email application opens and the scanned image is attached to a new, blank email.

Related Information

- Scan Using ControlCenter2 (Mac)

Scan to an Editable Text File (OCR) Using ControlCenter2 (Mac)

Your machine can convert characters in a scanned document to text using optical character recognition (OCR) technology. You can edit this text using your preferred text-editing application.

The Scan to OCR feature is available for certain languages.

1. Load your document.
2. In the **Finder** menu bar, click **Go** > **Applications** > **Brother**, and then double-click the (**ControlCenter**) icon.
   The **ControlCenter2** screen appears.
3. Click the **SCAN** tab.

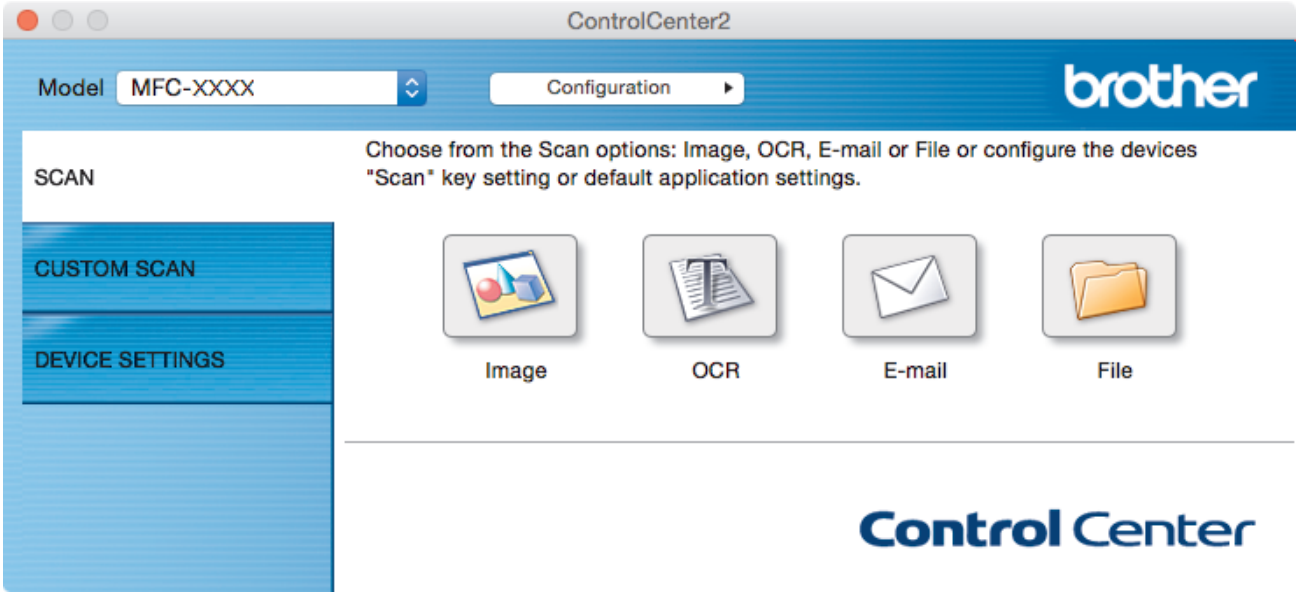

4. Click the **OCR** button.
   The scan settings dialog box appears.

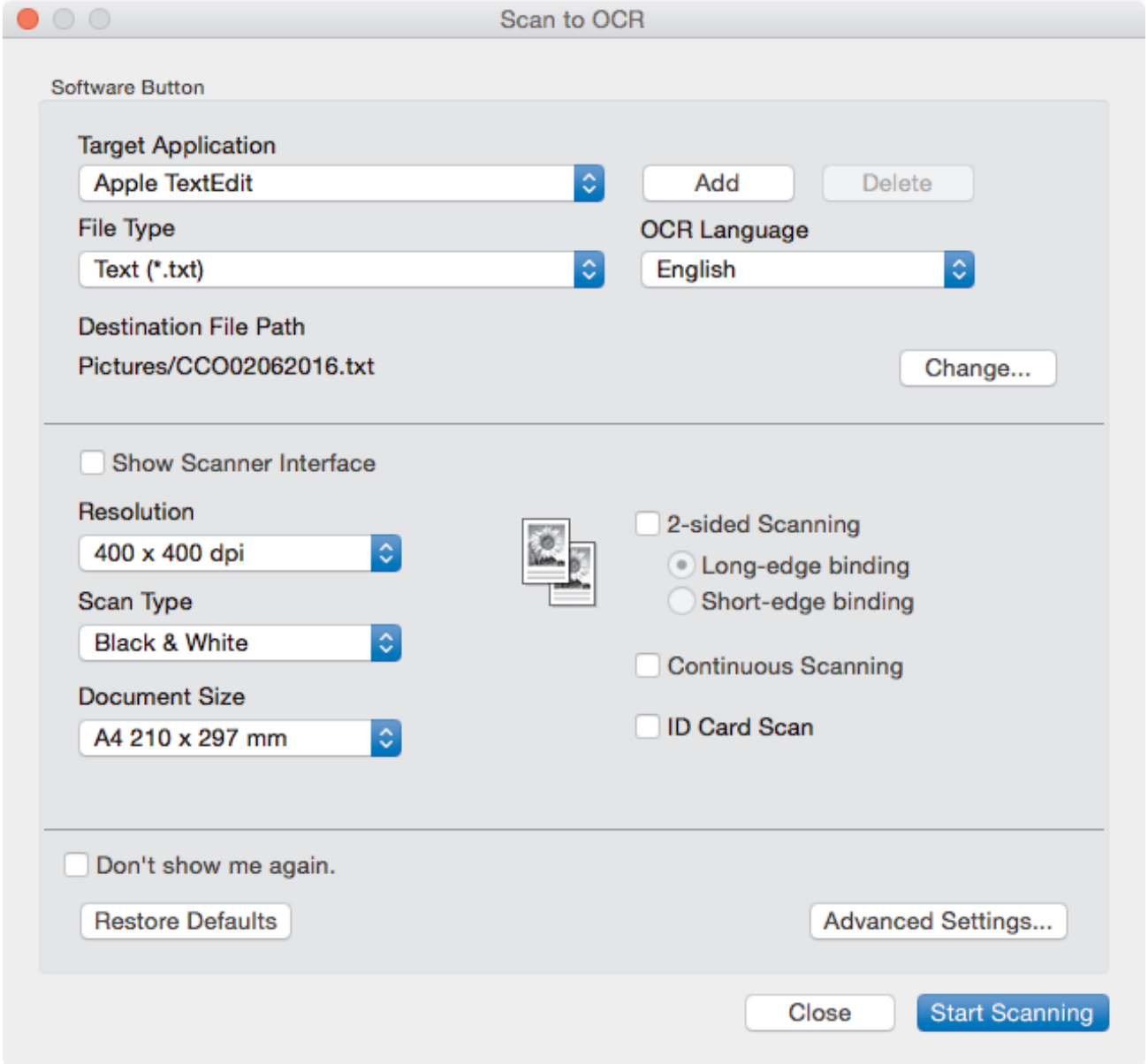

5. Change the scan settings, such as file format, file name, destination file path, resolution and colour, if needed.

To change the file name or destination file path, click **Change**.

6. Click the **Start Scanning** button.

   The machine scans the document, converts it to editable text, and then sends it to your default word processing application.

Related Information

- Scan Using ControlCenter2 (Mac)

Scan to an Office File Using ControlCenter2 (Mac)

Your machine can convert scanned data to a Microsoft Word file or a Microsoft PowerPoint file.

In order to use this feature, your computer must be connected to the Internet.

1. Load your document.
2. In the **Finder** menu bar, click **Go** > **Applications** > **Brother**, and then double-click the (**ControlCenter**) icon.

   The **ControlCenter2** screen appears.
3. Click the **SCAN** tab.

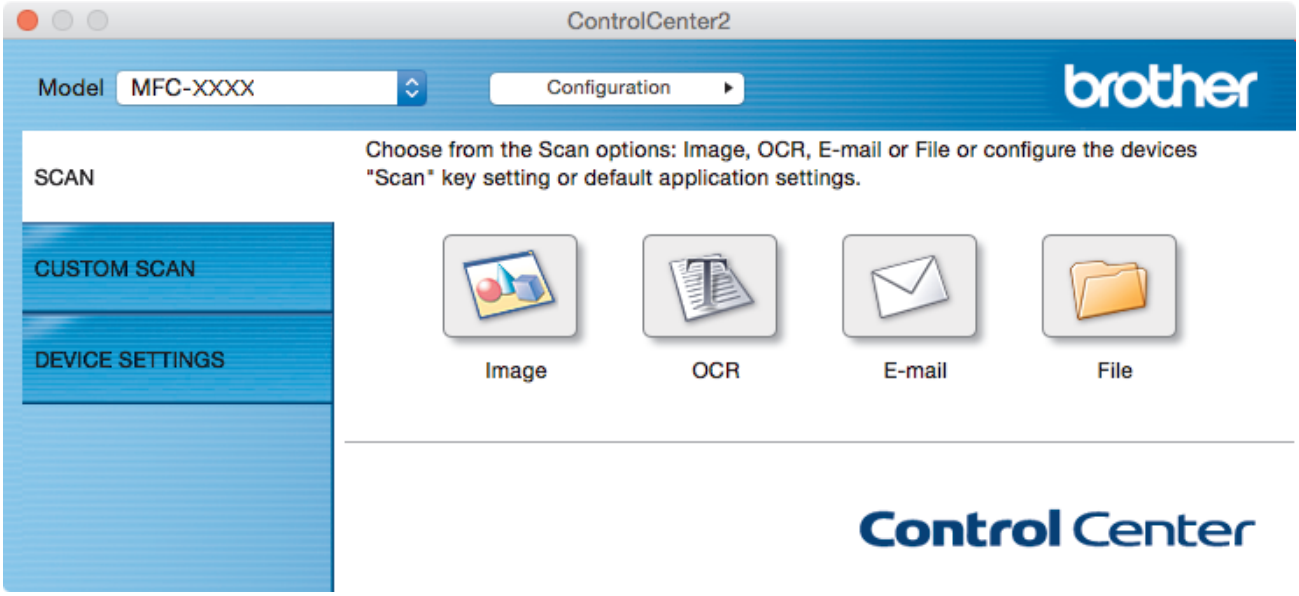

4. Click the **E-mail** or **File** button.

   The scan settings dialog box appears.
5. Click the **File Type** pop-up menu, and then select the **Microsoft Office Word (*.docx)** or **Microsoft Office PowerPoint (*.pptx)** option.

   If a message dialog box regarding the Internet connection appears, read the information and click **OK**.
6. Change the scan settings, if needed.
7. Click the **Start Scanning** button.

Related Information

- Scan Using ControlCenter2 (Mac)

Scan Settings for ControlCenter2 (Mac)

Settings	Applicable Features			
	Image	OCR	E-mail	File
Target Application/E-mail Application	Yes	Yes	Yes	-
File Type	Yes	Yes	Yes	Yes
File size	Yes	-	Yes	Yes
OCR Language (only available for certain models)	-	Yes	-	-
Destination File Path	Yes	Yes	Yes	-
File Name	Yes	Yes	Yes	Yes
Insert Date in File Name	Yes	Yes	Yes	Yes
Destination Folder	Yes	Yes	Yes	Yes
Show Save As window	-	-	-	Yes
Resolution	Yes	Yes	Yes	Yes
Scan Type	Yes	Yes	Yes	Yes
Document Size	Yes	Yes	Yes	Yes
Continuous Scanning	Yes	Yes	Yes	Yes
2-sided Scanning (available only for certain models)	Yes	Yes	Yes	Yes
ID Card Scan	Yes	Yes	Yes	Yes
Show Scanner Interface	Yes	Yes	Yes	Yes
Advanced Settings	Yes	Yes	Yes	Yes
Restore Defaults	Yes	Yes	Yes	Yes

Target Application/E-mail Application

Select which application is used to open scanned data. Only applications installed on your computer can be selected.

- **Add**

  Add an application to the pop-up menu.

  Type the application name in the **Application Name** field (up to 30 characters) and select your preferred application by clicking the **Browse** button. Select the **File Type** option from the pop-up menu.

- **Delete**

  Delete an application you have added to the pop-up menu.

  Select the application from the **Application Name** pop-up menu, and then click **Delete**.

File Type

Select the file type you want to use for the scanned data.

File size

Change the file size by moving the **File size** slider to the right or left.

OCR Language

Set the optical character recognition (OCR) language to match the language of the scanned document's text (available only for certain models).

Destination File Path

Click the **Change** button to change the prefix of the file name and the path of the destination folder.

File Name

Type a prefix for your file name, if needed. To change the prefix for the **Image**, **OCR**, and **E-mail** features, click **Change**.

Insert Date in File Name

Automatically inserts the date in the file name of the scanned image. To insert the date in the file name for the **Image**, **OCR** and **E-mail** features, click **Change**.

Destination Folder

To change the folder for the **Image**, **OCR** and **E-mail** features, click **Change**. Click **Browse** to select the folder where you want to save your scanned document. Select the **Show Folder** option to automatically display the destination folder after scanning to a **File**.

Show Save As window

Select this option to specify the scanned image's destination every time you scan.

Resolution

Select a scanning resolution from the **Resolution** pop-up menu. Higher resolutions take more memory and transfer time, but produce a finer scanned image.

Scan Type

Select from a range of scan colour depths.

- **Black & White**

  Use for text or line art images.
- **Gray (Error Diffusion)**

  Use for photographic images or graphics. (Error Diffusion is a method for creating simulated grey images without using true grey dots. Black dots are put in a specific pattern to give a grey appearance.)
- **True Gray**

  Use for photographic images or graphics. This mode is more accurate because it uses up to 256 shades of grey.
- **24bit Color**

  Use to create an image with the most accurate colour reproduction. This mode uses up to 16.8 million colours to scan the image, but it requires the most memory and has the longest transfer time.
- **Auto**

  Use for any type of document. This mode automatically picks an appropriate colour depth for the document.

Document Size

Select the exact size of your document from the **Document Size** pop-up menu.

- If you select the **1 to 2 (A4)** option, the scanned image will be divided into two A5-size documents.

Continuous Scanning

Select this option to scan multiple pages. After a page is scanned, select either continue scanning or finish.

2-sided Scanning

Select this check box to scan both sides of the document. When using the Automatic 2-sided Scan feature, you must select the **Long-edge binding** or **Short-edge binding** option, depending on the layout of your original, to make sure the created data file appears correctly. (Available only for certain models)

ID Card Scan

Select this check box to scan both sides of an identification card onto one page.

Show Scanner Interface

Select this check box to crop a portion of a scanned page after pre-scanning the document.

Advanced Settings

Configure advanced settings by clicking the **Advanced Settings** button in the scan settings dialog box.

- **Brightness**

  Set the **Brightness** level by dragging the slider to the right or left to lighten or darken the image. If the scanned image is too light, set a lower brightness level and scan the document again. If the image is too dark, set a higher brightness level and scan the document again.

- **Contrast**

  Increase or decrease the **Contrast** level by moving the slider to the right or left. An increase emphasise dark and light areas of the image, while a decrease reveals more details in grey areas.

- **ADF Auto Deskew**

  When scanning the document from the ADF, the machine corrects skewing of the document automatically. (Available only for certain models)

- **Remove Background Color**

  Select this option to remove the base colour of documents to make the scanned data more recognisable. When you use this feature, select from three settings: high, medium and low.

- **Skip Blank Page**

  Remove blank pages of the document from the scanning results. (Available only for certain models)

- **Display Scanning Results**

  Show the numbers of total pages saved and blank pages skipped on your computer screen. (Available only for certain models)

- **Rotate Image**

  Rotate the scanned image.

Restore Defaults

Select this option to restore all settings to their factory setting values.

Related Information

- Scan Using ControlCenter2 (Mac)

Scan Using TWAIN-Compliant Applications (Mac)

You can also scan using TWAIN-compliant applications. For more information about the scanning procedure, see the manual for your application.

1. Start your graphics application, and then select the scan operation.

   The scanner setup dialog box appears.

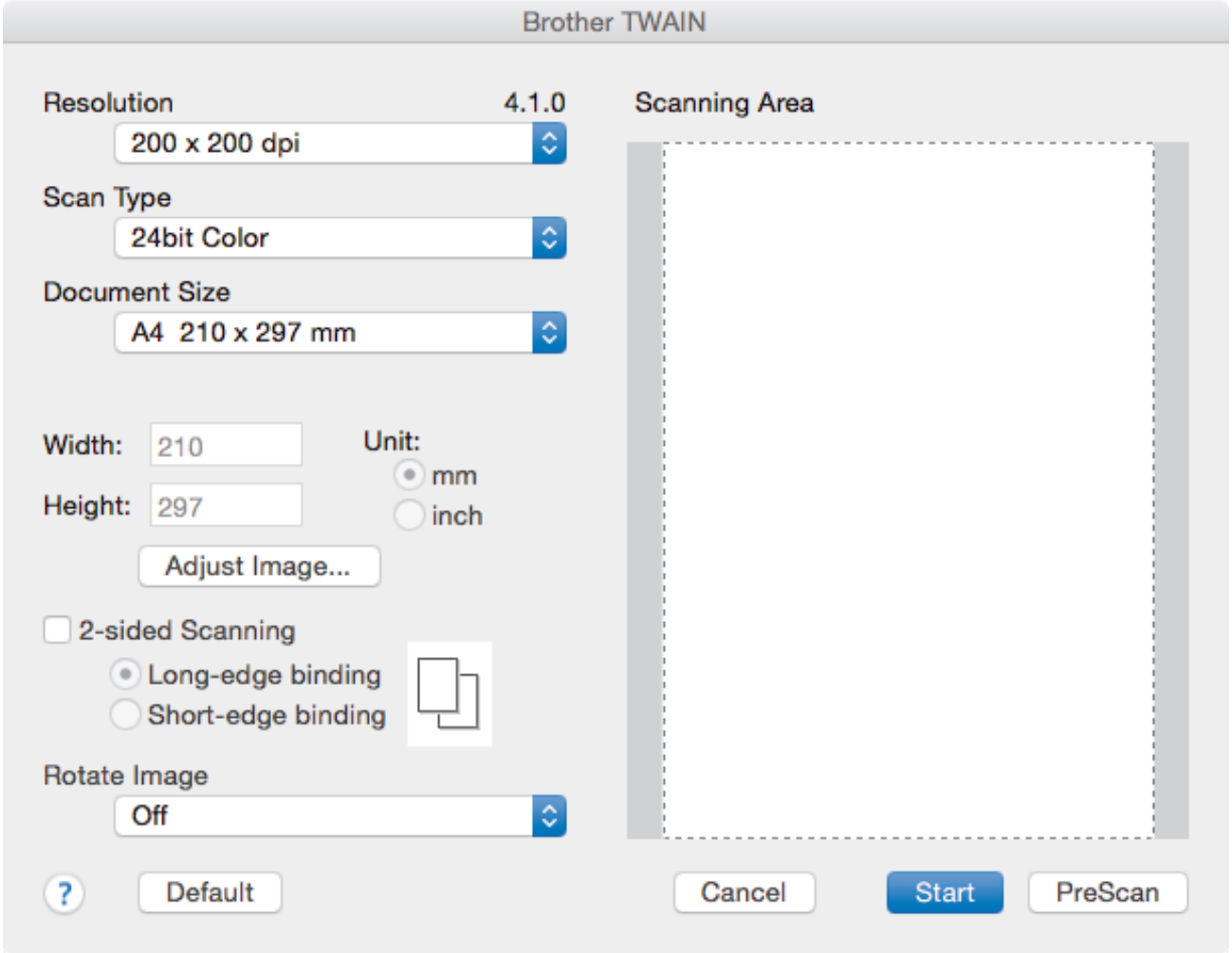

2. Change the scan settings, such as **Resolution**, **Scan Type**, or **Adjust Image**, if needed.
3. Click the **Document Size** pop-up menu, and then select your document size.
4. Click the **PreScan** option to preview your image and crop unwanted portions before scanning.

- After you select a document size, adjust the scanning area by holding down the mouse button and dragging your mouse pointer over the portion you want to scan.
- To scan both sides of the document (MFC-J3930DW):

  Automatic 2-sided scan is available only when using the ADF.

  You cannot adjust the scanning area.

  You cannot use PreScan to preview an image.

5. Click **Start**.

   The machine starts scanning.

Related Information

- Scan from Your Computer (Mac)
- TWAIN Driver Settings (Mac)

TWAIN Driver Settings (Mac)

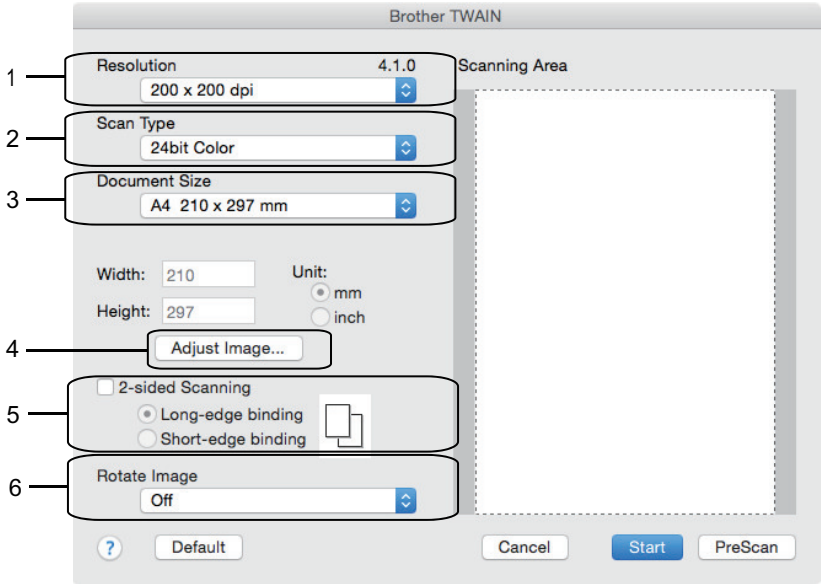

- Item names and assignable values will vary depending on the machine.
- The **Contrast** setting is available only when selecting **Gray (Error Diffusion)**, **True Gray**, or **24bit Color** from the **Scan Type** options.

1. **Resolution**

   Select a scanning resolution from the **Resolution** pop-up menu. Higher resolutions take more memory and transfer time, but produce a finer scanned image.

2. **Scan Type**

   Select from a range of scan colour depths.

   - **Black & White**

     Use for text or line art images.

   - **Gray (Error Diffusion)**

     Use for photographic images or graphics. (Error Diffusion is a method for creating simulated grey images without using true grey dots. Black dots are put in a specific pattern to give a grey appearance.)

   - **True Gray**

     Use for photographic images or graphics. This mode is more accurate because it uses up to 256 shades of grey.

   - **24bit Color**

     Use to create an image with the most accurate colour reproduction. This mode uses up to 16.8 million colours to scan the image, but it requires the most memory and has the longest transfer time.

3. **Document Size**

   Select the exact size of your document from a selection of preset scan sizes.

   - If you select **Custom**, you can specify the document size.

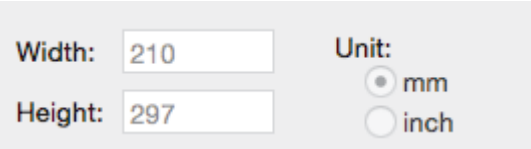

4. **Adjust Image**

   Click the **Adjust Image** button to adjust other image qualities.

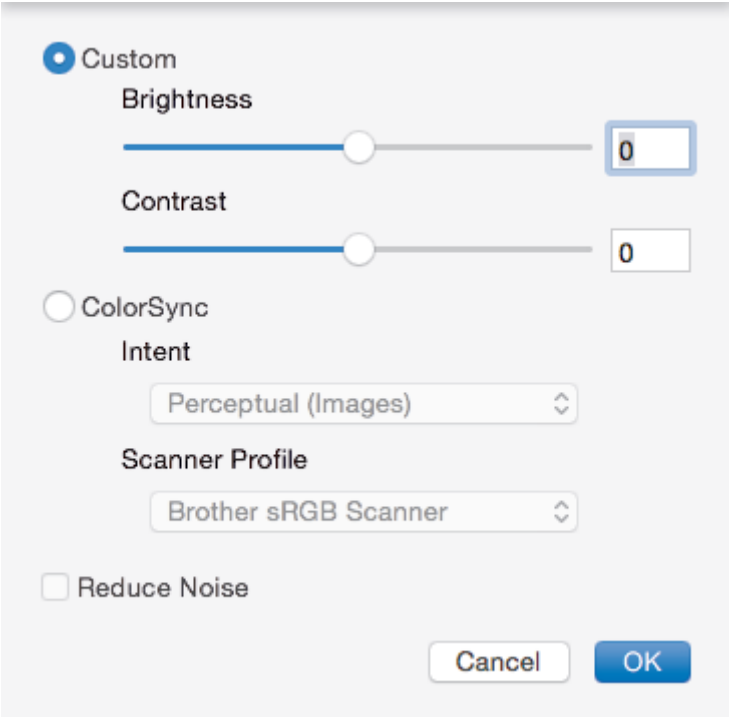

   Brightness

   Set the **Brightness** level by dragging the slider to the right or left to lighten or darken the image. If the scanned image is too light, set a lower brightness level and scan the document again. If the image is too dark, set a higher brightness level and scan the document again. You can also type a value in the box to set the brightness.

   Contrast

   Increase or decrease the **Contrast** level by moving the slider to the right or left. An increase emphasises dark and light areas of the image, while a decrease reveals more details in grey areas. You can also type a value in the box to set the contrast.

   Reduce Noise

   Improve and enhance the quality of your scanned images with this selection. The **Reduce Noise** option is available when selecting the **24bit Color** option and the **300 x 300 dpi**, **400 x 400 dpi**, or **600 x 600 dpi** scan resolutions.

5. **2-sided Scanning**

   If you select this check box, the machine scans both sides of the document. When using the Automatic 2-sided Scan feature, you must select the **Long-edge binding** or **Short-edge binding** option, depending on the layout of your original, to make sure the created data file appears correctly.

   (Available only for certain models)

6. **Rotate Image**

   Rotate the scanned image.

Related Information

- Scan Using TWAIN-Compliant Applications (Mac)

Configure Scan Settings Using Web Based Management

- Set the Scan Job Email Report Using Web Based Management

Set the Scan Job Email Report Using Web Based Management

When you scan a document, the machine will send a scan job email report automatically to the registered email address.

1. Start your web browser.

   Type "http://machine's IP address" in your browser's address bar (where "machine's IP address" is the IP address of the machine or the print server name). For example: http://192.168.1.2

   No password is required by default. If you have previously set a password, type it, and then click .
2. Click the **Scan** tab.
3. Click the **Scan Job e-mail report** menu in the left navigation bar.
4. In the **Administrator Address** field, type the email address.
5. For the scan functions you want, select **On** to send a scan job email report.
6. Click **Submit**.

Related Information

- Configure Scan Settings Using Web Based Management

Copy

- Copy a Document
- Enlarge or Reduce Copied Images
- Sort Copies
- Make Page Layout Copies (N in 1 or Poster)
- Copy on Both Sides of the Paper (2-sided Copy)
- Copy an ID Card
- Use the A3 Copy Shortcuts
- Copy in Ink Save Mode
- Copy Options
- Use Preset Copy Settings

Copy a Document

>> MFC-J3530DW
>> MFC-J3930DW

MFC-J3530DW

1. Make sure you have loaded the correct size paper in the paper tray.
2. Load your document.
3. Press [Copy].

   The touchscreen displays:

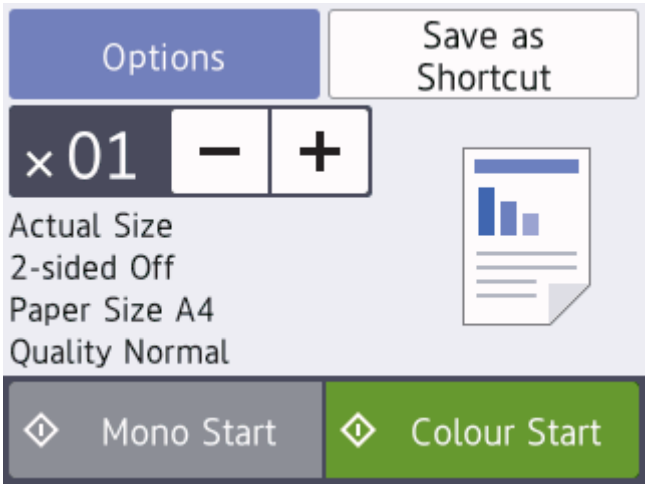

4. Change the copy settings, if needed.

When you load paper other than A4 size Plain Paper, you must change the [Paper Size] and [Paper Type] settings by pressing [Options].

Option	Description
×01 (No. of Copies)	Enter the number of copies in one of the following ways: • Press − or + on the touchscreen. • Press ×01 to display the keyboard on the touchscreen, and then enter the number of copies using the touchscreen keyboard. Press OK. • Enter the number of copies using the dial pad.
Options	Press Options to change the copy settings for the next copy only. When you have finished changing settings, press OK.
Current setting indications	Press the area indicated on the screen in the previous step to change these settings for the next copy only. • Enlarge/Reduce • 2-sided Copy • Paper Size • Quality When you have finished changing settings, press OK.

After you have finished choosing new options, you can save them by pressing the [Save as Shortcut] button.

5. Press [Mono Start] or [Colour Start].

To stop copying, press ✕.

MFC-J3930DW

1. Make sure you have loaded the correct size paper in the paper tray.
2. Load your document.
3. Press [Copy].

   The touchscreen displays:

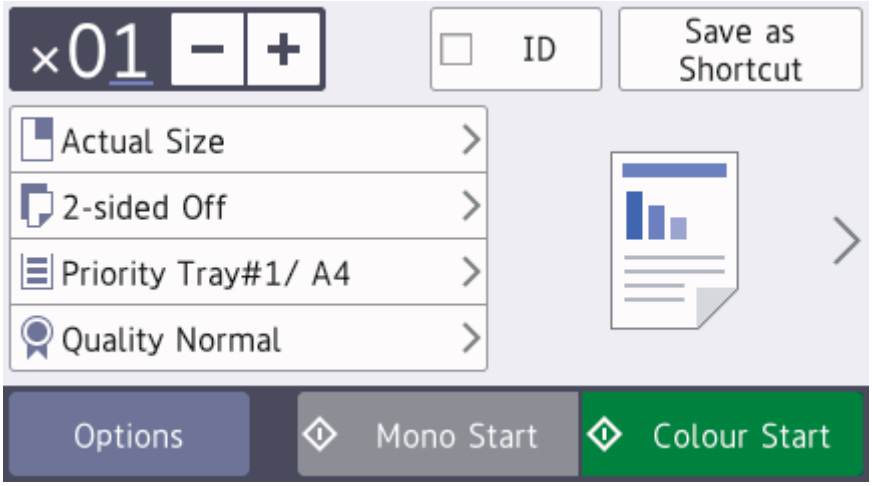

4. Change the copy settings, if needed.

When you load paper other than A4 size Plain Paper, you must change the [Paper Size] and [Paper Type] settings by pressing [Options].

Option	Description
×01 (No. of Copies)	Enter the number of copies in one of the following ways: • Press − or + on the touchscreen. • Press ×01 to display the keyboard on the touchscreen, and then enter the number of copies using the touchscreen keyboard. Press OK. • Enter the number of copies using the dial pad.
2 in 1 ID Copy	Press ID to display a red check mark. You can start 2 in 1 ID Copy.
Copy preset settings	You can copy with a variety of settings by pressing the buttons that are already set up in the machine. To select these settings, press >, and then swipe left or right or press ◀ or ▶.
Options	Press Options to change the copy settings for the next copy only. When you have finished changing settings, press OK.
Current setting indications	Press the following icons to change these settings for the next copy only:

Option	Description
	• Enlarge/Reduce • 2-sided Copy • Tray Select • Quality

After you have finished selecting new options, you can save them by pressing the [Save as Shortcut] button.

5. Press [Mono Start] or [Colour Start].

To stop copying, press .

Related Information

- Copy
- Load Documents in the Automatic Document Feeder (ADF)
- Load Documents on the Scanner Glass
- Use Preset Copy Settings
- Copy Options

Enlarge or Reduce Copied Images

Select an enlargement or reduction ratio to resize your copied data.

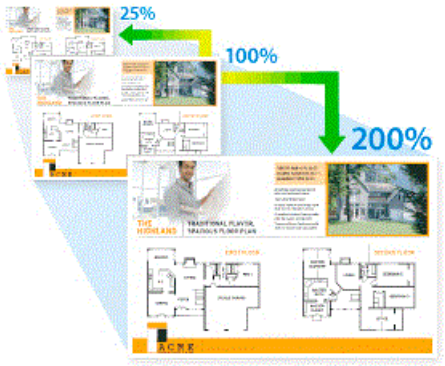

>> MFC-J3530DW
>> MFC-J3930DW

MFC-J3530DW

1. Load your document.
2. Press [Copy].
3. Enter the number of copies in one of the following ways:
   - Press [-] or [+] on the touchscreen.
   - Press ×01 to display the keyboard on the touchscreen, and then enter the number of copies using the touchscreen keyboard. Press [OK].
   - Enter the number of copies using the dial pad.
4. Press [Options] > [Enlarge/Reduce].
5. Press ▲ or ▼ to display the available options, and then press the option you want to change.
6. Do one of the following:
   - If you selected the [Enlarge] or [Reduce] option, press the enlargement or reduction ratio you want to use.
   - If you selected the [Custom(25-400%)] option, press ⌫ (backspace) to erase the displayed percentage, or press ◀ to move the cursor, and then enter an enlargement or reduction ratio from [25%] to [400%].

     Press [OK].
   - If you selected [100%] or the [Fit to Page] option, go to the next step.
7. Read and confirm the displayed list of options you have selected, and then press [OK].
8. When you have finished changing settings, press [Mono Start] or [Colour Start].

If you selected the [Fit to Page] option, your machine adjusts the copy size to fit the paper size set in the machine.

- The [Fit to Page] option does not work correctly when the document on the scanner glass is skewed more than three degrees. Using the document guidelines on the left and top, place your document in the upper-left corner, with the document face down on the scanner glass.
- The [Fit to Page] option is not available for Legal size documents.

MFC-J3930DW

1. Load your document.

2. Press [Copy].
3. Enter the number of copies in one of the following ways:
   - Press [-] or [+] on the touchscreen.
   - Press ×01 to display the keyboard on the touchscreen, and then enter the number of copies using the touchscreen keyboard. Press [OK].
   - Enter the number of copies using the dial pad.
4. Press [Options] > [Enlarge/Reduce].
5. Swipe up or down or press ▲ or ▼ to display the available options, and then press the option you want to change.
6. Do one of the following:
   - If you selected the [Enlarge] or [Reduce] option, press the enlargement or reduction ratio you want.
   - If you selected the [Custom(25-400%)] option, press ⌫ (backspace) to erase the displayed percentage, or press ◀ to move the cursor, and then enter an enlargement or reduction ratio from [25%] to [400%].

     Press [OK].
   - If you selected [100%] or the [Fit to Page] option, go to the next step.
7. Read and confirm the displayed list of options you have selected, and then press [OK].
8. When you have finished changing settings, press [Mono Start] or [Colour Start].

If you selected the [Fit to Page] option, your machine adjusts the copy size to fit the paper size set in the machine.

- The [Fit to Page] option does not work correctly when the document on the scanner glass is skewed more than three degrees. Using the document guidelines on the left and top, place your document in the upper-left corner, with the document face down on the scanner glass.
- The [Fit to Page] option is not available for Legal size documents.

Related Information

- Copy

Sort Copies

Sort multiple copies. Pages will be stacked in the order they are fed, that is: 1, 2, 3, and so on.

>> MFC-J3530DW
>> MFC-J3930DW

MFC-J3530DW

1. Load your document.
2. Press [Copy].
3. Enter the number of copies in one of the following ways:
   - Press [-] or [+] on the touchscreen.
   - Press ×01 to display the keyboard on the touchscreen, and then enter the number of copies using the touchscreen keyboard. Press [OK].
   - Enter the number of copies using the dial pad.
4. Press [Options] > [Stack/Sort] > [Sort].
5. Read and confirm the displayed list of settings you have selected, and then press [OK].
6. When you have finished changing settings, press [Mono Start] or [Colour Start]. If you placed the document in the ADF, the machine scans the document and starts printing.
7. **If you are using the scanner glass, repeat the following steps for each page of the document:**
   - Place the next page on the scanner glass, and then press [Continue] to scan the page.
   - After scanning all the pages, press [Finish].

MFC-J3930DW

1. Load your document.
2. Press [Copy].
3. Enter the number of copies in one of the following ways:
   - Press [-] or [+] on the touchscreen.
   - Press ×01 to display the keyboard on the touchscreen, and then enter the number of copies using the touchscreen keyboard. Press [OK].
   - Enter the number of copies using the dial pad.
4. To sort multiple copies, press [Options] > [Stack/Sort] > [Sort].
5. Read and confirm the displayed list of settings you have selected, and then press [OK].
6. When you have finished changing settings, press [Mono Start] or [Colour Start]. If you placed the document in the ADF, the machine scans the pages and starts printing.
7. **If you are using the scanner glass, repeat the following steps for each page of the document:**
   - Place the next page on the scanner glass, and then press [Continue] to scan the page.
   - After scanning all the pages, press [Finish].

Related Information

- Copy

Make Page Layout Copies (N in 1 or Poster)

The N in 1 copy feature saves paper by copying two or four pages of your document onto one page of the copy. The poster feature divides your document into sections, then enlarges the sections so you can assemble them into a poster. To print a poster, use the scanner glass.

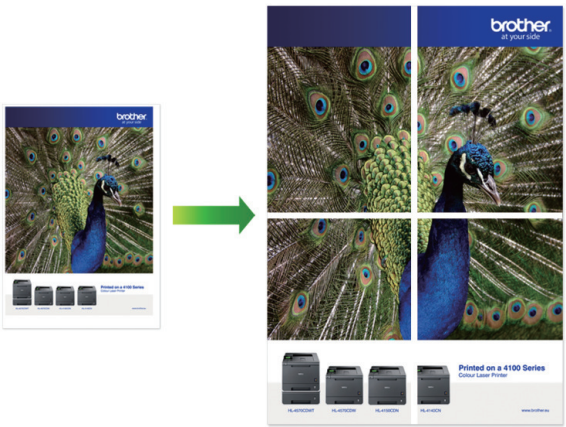

- Make sure the paper size is set to A4, A3, Letter, or Ledger.
- You can make only one Poster copy at a time.

The 1 to 2 feature copies one A3 or Ledger size paper onto two A4 or Letter size papers. You can make only one 1 to 2 copy at a time.

>> MFC-J3530DW
>> MFC-J3930DW

MFC-J3530DW

1. Load your document.
2. Press [Copy].
3. Enter the number of copies in one of the following ways:
   - Press [-] or [+] on the touchscreen.
   - Press ×01 to display the keyboard on the touchscreen, and then enter the number of copies using the touchscreen keyboard. Press [OK].
   - Enter the number of copies using the dial pad.
4. Press [Options] > [Page Layout].
5. Press ▲ or ▼ to display the options, and then press the option you want.

Option	Description
Off(1in1)	-
2in1(Portrait)	
2in1(Landscape)	
2in1(ID) (Using the scanner glass)	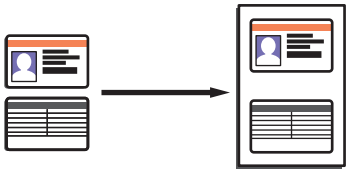
4in1(Portrait)	
4in1(Landscape)	
1to2 (Using the scanner glass)	
Poster(2x1) (Using the scanner glass)	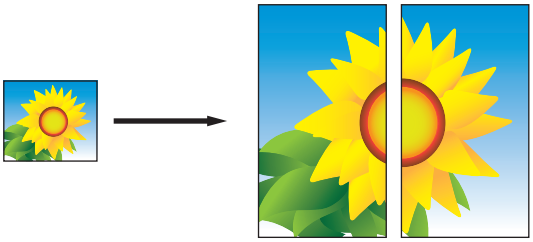
Poster(2x2) (Using the scanner glass)	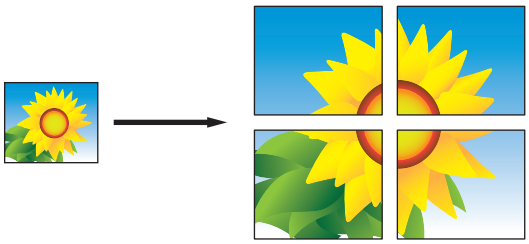
Poster(3x3) (Using the scanner glass)	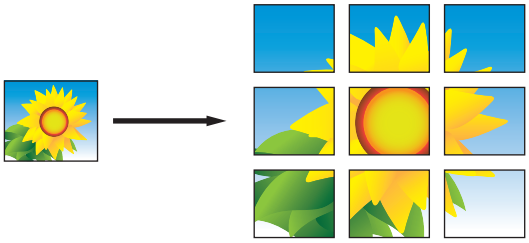

6. Read and confirm the displayed list of settings you have selected, and then press [OK].
7. When you have finished changing settings, press [Mono Start] or [Colour Start]. If you placed the document in the ADF or are making a poster, the machine scans the pages and starts printing.
8. **If you are using the scanner glass, repeat the following steps for each page of the document:**

- Place the next page on the scanner glass, and then press [Continue] to scan the page.
- After scanning all the pages, press [Finish].

MFC-J3930DW

1. Load your document.
2. Press [Copy].
3. Enter the number of copies in one of the following ways:
   - Press [-] or [+] on the touchscreen.
   - Press ×01 to display the keyboard on the touchscreen, and then enter the number of copies using the touchscreen keyboard. Press [OK].
   - Enter the number of copies using the dial pad.
4. Press [Options] > [Page Layout].
5. Swipe up or down or press ▲ or ▼ to display the options, and then press the option you want.

Option	Description
Off(1in1)	-
2in1(Portrait)	
2in1(Landscape)	
2in1(ID) (Using the scanner glass)	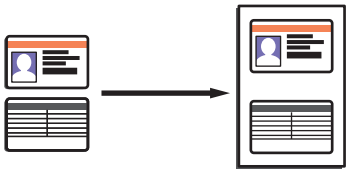
4in1(Portrait)	
4in1(Landscape)	
1to2 (Using the scanner glass)	
Poster(2x1) (Using the scanner glass)	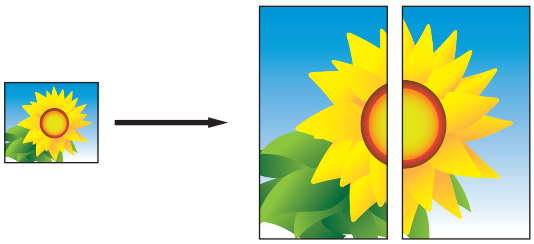

Option	Description
`Poster(2x2)` (Using the scanner glass)	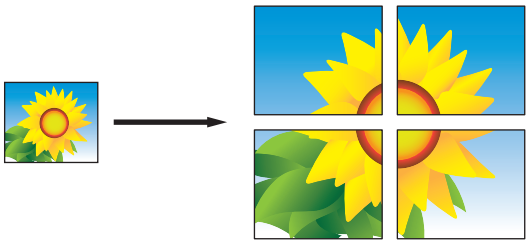
`Poster(3x3)` (Using the scanner glass)	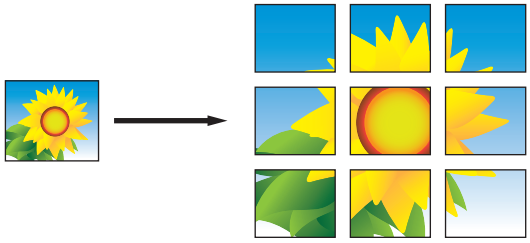

6. Read and confirm the displayed list of settings you have selected, and then press `[OK]`.
7. When you have finished changing settings, press `[Mono Start]` or `[Colour Start]`. If you placed the document in the ADF or are making a poster, the machine scans the pages and starts printing.
8. **If you are using the scanner glass, repeat the following steps for each page of the document:**
   - Place the next page on the scanner glass, and then press `[Continue]` to scan the page.
   - After scanning all the pages, press `[Finish]`.

Related Information

- Copy

Copy on Both Sides of the Paper (2-sided Copy)

Reduce the amount of paper you use by copying onto both sides of the paper.

- You must choose a 2-sided copy layout from the following options before you can start 2-sided copying.
- The layout of your original document determines which 2-sided copy layout you should choose.
- We recommend loading single-sided documents in the ADF for 2-sided copying.
- (MFC-J3930DW)
  You can copy 2-sided documents automatically up to A3 size using the ADF.
- (MFC-J3530DW)
  When you manually make 2 sided copies from a 2-sided document, use the scanner glass.
- You can use only A4, Letter, A5, A3, Ledger, Legal, Folio, Mexico Legal, or India Legal size plain paper.

Portrait

1–sided to 2–sided (Long Edge Flip)

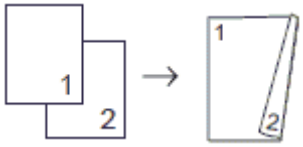

1–sided to 2–sided (Short Edge Flip)

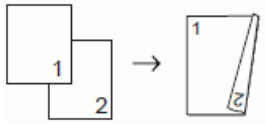

2–sided to 2–sided

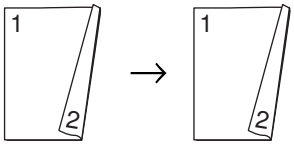

2–sided to 1–sided (Long Edge Flip)

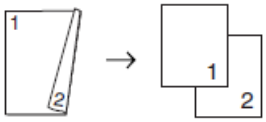

2–sided to 1–sided (Short Edge Flip)

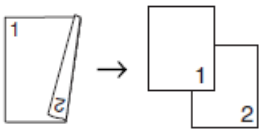

Landscape

1–sided to 2–sided (Long Edge Flip)

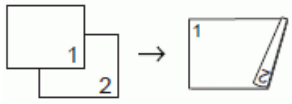

1–sided to 2–sided (Short Edge Flip)

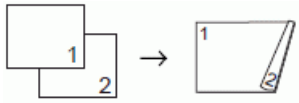

2–sided to 2–sided

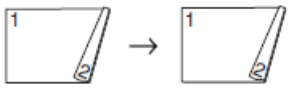

2–sided to 1–sided (Long Edge Flip)

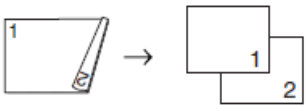

2–sided to 1–sided (Short Edge Flip)

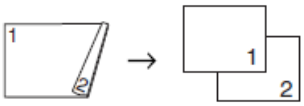

>> MFC-J3530DW
>> MFC-J3930DW

MFC-J3530DW

1. Load your document.
2. Press [Copy].
3. Enter the number of copies in one of the following ways:
   - Press [-] or [+] on the touchscreen.
   - Press ×01 to display the keyboard on the touchscreen, and then enter the number of copies using the touchscreen keyboard. Press [OK].
   - Enter the number of copies using the dial pad.
4. To sort multiple copies, press [Options] > [Stack/Sort] > [Sort].
5. Press ▲ or ▼ to display the [2-sided Copy] option, and then press it.
6. Do one of the following:
   - To make 2-sided copies from a 1-sided document, follow these steps:
     a. To change the layout options, press [Layout], and then press [Long Edge Flip] or [Short Edge Flip].
     b. Press [1-sided⇒2-sided].
   - To make 2-sided copies of a 2-sided document manually, press [2-sided⇒2-sided].

Use the scanner glass to make 2-sided copies of a 2-sided document manually.

7. Review your settings on the touchscreen, and then press [OK].
8. Press [Mono Start] or [Colour Start]. If you placed the document in the ADF, the machine scans the pages and starts printing.
9. **If you are using the scanner glass, repeat the following steps for each page of the document:**
   - Place the next page on the scanner glass, and then press [Continue] to scan the page.
   - After scanning all the pages, press [Finish].

DO NOT touch the printed page until it is ejected the second time. The machine will print the first side and eject the paper, and then pull the paper in to print the second side.

If you experience smudged printouts or paper jams, press [Settings] > [Maintenance] > [Print Setting Options] > [Reduce Smudging], and then change settings.

MFC-J3930DW

1. Load your document.
2. Press [Copy].
3. Enter the number of copies in one of the following ways:

- Press [-] or [+] on the touchscreen.
- Press ×01 to display the keyboard on the touchscreen, and then enter the number of copies using the touchscreen keyboard. Press [OK].
- Enter the number of copies using the dial pad.

4. To sort multiple copies, press [Options] > [Stack/Sort] > [Sort].
5. Swipe up or down or press ▲ or ▼ to display the [2-sided Copy] option, and then press it.
6. Do one of the following:
   - To make 2-sided copies from a 1-sided document, follow these steps:
     a. To change the layout options, press [Layout], and then press [Long Edge Flip] or [Short Edge Flip].
     b. Press [1-sided⇒2-sided].
   - To make 2-sided copies of a 2-sided document automatically, press [2-sided⇒2-sided].

Load your document in the ADF to use the automatic 2-sided copy feature.

   - To make 1-sided copies from a 2-sided document, follow these steps:
     a. To change the layout options, press [Layout], and then press [Long Edge Flip] or [Short Edge Flip].
     b. Press [2-sided⇒1-sided].

Load your document in the ADF to use the automatic 2-sided copy feature.

7. Review your settings on the touchscreen, and then press [OK].
8. Press [Mono Start] or [Colour Start]. If you placed the document in the ADF, the machine scans the pages and starts printing.
9. **If you are using the scanner glass, repeat the following steps for each page of the document:**
   - Place the next page on the scanner glass, and then press [Continue] to scan the page.
   - After scanning all the pages, press [Finish].

DO NOT touch the printed page until it is ejected the second time. The machine will print the first side and eject the paper, and then pull the paper in to print the second side.

If you experience smudged printouts or paper jams, press [Settings] > [Maintenance] > [Print Setting Options] > [Reduce Smudging], and then change settings.

Related Information

- Copy
- Change the Print Setting Options When Having Printing Problems

Copy an ID Card

Use the [2in1(ID)] feature to copy both sides of an identification card onto one page, keeping the original card size.

- Make sure the paper size is set to A4 or Letter.
- You may copy an identification card to the extent permitted under applicable laws. For more detailed information, see the *Product Safety Guide*.

>> MFC-J3530DW
>> MFC-J3930DW

MFC-J3530DW

1. Place your identification card face down near the upper-left corner of the scanner glass.

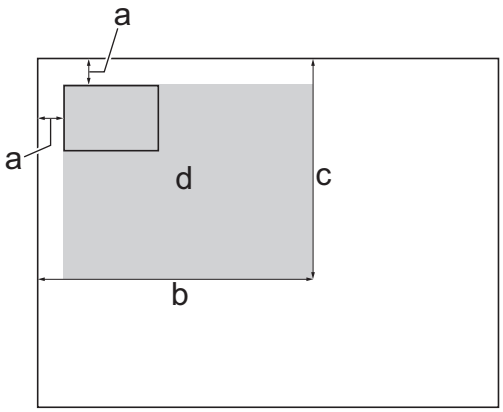

   a. 3 mm or greater (top, left)
   b. 207 mm
   c. 145 mm
   d. scannable area

2. Press ◀ or ▶ to display [2 in 1 ID Copy], and then press it.
3. Enter the number of copies in one of the following ways:
   - Press [-] or [+] on the touchscreen.
   - Press ×01 to display the keyboard on the touchscreen, and then enter the number of copies using the touchscreen keyboard. Press [OK].
   - Enter the number of copies using the dial pad.
4. To change the copy settings, press [Options]. When finished, press [OK].
5. Press [Mono Start] or [Colour Start].

   The machine starts scanning one side of the identification card.
6. After the machine has scanned the first side, turn over the identification card and press [Continue] to scan the other side.

MFC-J3930DW

1. Place your identification card face down near the upper-left corner of the scanner glass.

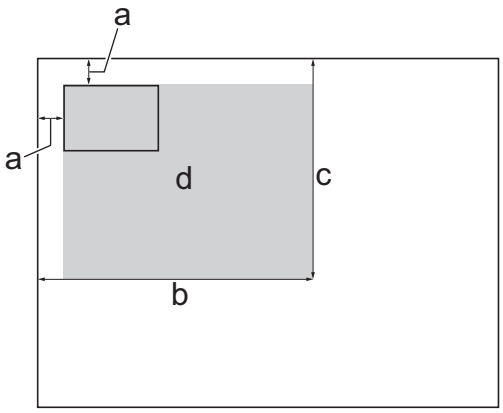

   a. 3 mm or greater (top, left)
   b. 207 mm
   c. 145 mm
   d. scannable area

2. Swipe left or right or press ◀ or ▶ to display [2 in 1 ID Copy], and then press it.

> You can also press [Copy], and then press [ID].

3. Enter the number of copies in one of the following ways:
   - Press [-] or [+] on the touchscreen.
   - Press ×01 to display the keyboard on the touchscreen, and then enter the number of copies using the touchscreen keyboard. Press [OK].
   - Enter the number of copies using the dial pad.
4. To change the copy settings, press [Options]. When finished, press [OK].
5. Press [Mono Start] or [Colour Start].

   The machine starts scanning one side of the identification card.
6. After the machine has scanned the first side, turn over the identification card and press [Continue] to scan the other side.

Related Information

- Copy
- Touchscreen LCD Overview

Use the A3 Copy Shortcuts

You can copy your document in A3 or Ledger size paper with a format such as Note style. Also you can make 2 in 1, enlarged and reduced copies.

>> MFC-J3530DW
>> MFC-J3930DW

MFC-J3530DW

1. Load your document.
2. Press ◀ or ▶ to display the [A3 Copy Shortcuts] option, and then press it.
3. If information appears on the touchscreen, read it, and then press [OK] to confirm.
4. Press ◀ or ▶ to display options, and then press the option you want.

Option	Description
A3 2in1	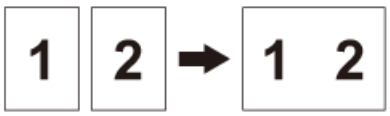
A3	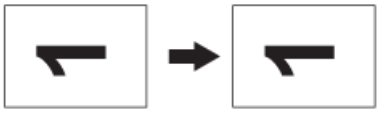
A4 ⇒ A3	
A3 ⇒ A4	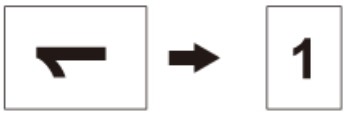
A4 + Note(L)	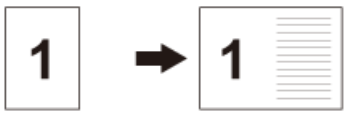
A4 + Note(P)	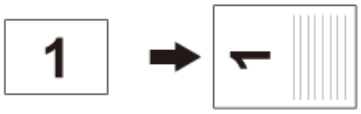
A4 + Grid	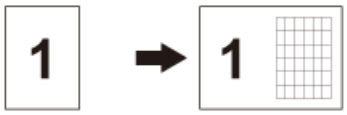
A4 + Blank	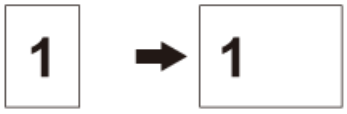
A4 Center	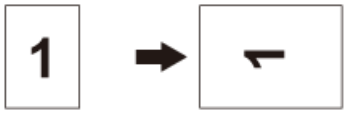

5. Enter the number of copies in one of the following ways:
   - Press [−] or [+] on the touchscreen.

- Press ×01 to display the keyboard on the touchscreen, and then enter the number of copies using the touchscreen keyboard. Press [OK].
- Enter the number of copies using the dial pad.

6. Do one of the following:
   - To change more settings, go to the next step.
   - When you have finished changing settings, press the [Mono Start] or [Colour Start] option to start copying.
7. Press [Options].
8. Press the setting you want to change.
9. Press your new option.
10. Repeat the last two steps to change other settings if needed.
11. When you have finished changing settings, press [OK].
12. Press [Mono Start] or [Colour Start].
13. **If you are using the scanner glass when choosing the [A3 2in1] option, repeat the following steps for each page of the document:**
    - Place the next page on the scanner glass, and then press [Continue] to scan the page.
    - After scanning all the pages, press [Finish].

MFC-J3930DW

1. Load your document.
2. Swipe left or right or press ◀ or ▶ to display [A3 Copy Shortcuts], and then press it.
3. If information appears on the touchscreen, read it, and then press [OK] to confirm.
4. Swipe left or right or press ◀ or ▶ to display options, and then press the option you want.

Option	Description
A3 2in1	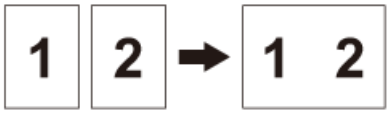
A3	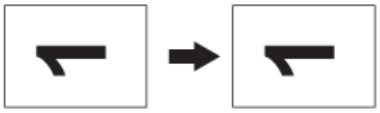
A4 ⇒ A3	
A3 ⇒ A4	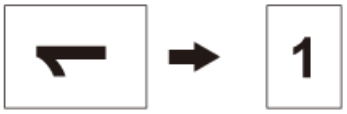
A4 + Note(L)	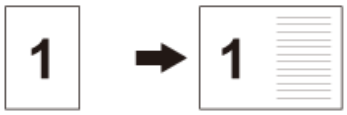
A4 + Note(P)	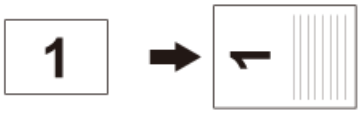

Option	Description
A4 + Grid	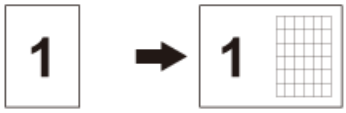
A4 + Blank	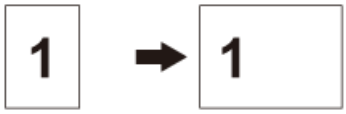
A4 Center	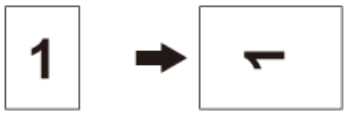

5. Press [OK].
6. Enter the number of copies in one of the following ways:
   - Press [-] or [+] on the touchscreen.
   - Press ×01 to display the keyboard on the touchscreen, and then enter the number of copies using the touchscreen keyboard. Press [OK].
   - Enter the number of copies using the dial pad.
7. Do one of the following:
   - To change more settings, go to the next step.
   - When you have finished changing settings, press the [Mono Start] or [Colour Start] button to start copying.
8. Press [Options].
9. Press the setting you want to change.
10. Press your new option. Repeat the previous step and this step to change other settings as needed.
11. When you have finished changing settings, press [OK].
12. Press [Mono Start] or [Colour Start].
13. **If you are using the scanner glass when choosing the [A3 2in1] option, repeat the following steps for each page of the document:**
    - Place the next page on the scanner glass, and then press [Continue] to scan the page.
    - After scanning all the pages, press [Finish].

Related Information

- Copy
- Touchscreen LCD Overview

Copy in Ink Save Mode

When you select Ink Save Mode, the machine prints the colours lighter and emphasises the outlines of the images.

- The amount of ink that is saved varies depending on the type of documents printed.
- Ink Save Mode may make your printouts look different from your original document.
- The Ink Save Mode feature is supported by technology from Reallusion, Inc.

>> MFC-J3530DW
>> MFC-J3930DW

MFC-J3530DW

1. Load your document.
2. Press [Copy].
3. Enter the number of copies in one of the following ways:
   - Press [-] or [+] on the touchscreen.
   - Press ×01 to display the keyboard on the touchscreen, and then enter the number of copies using the touchscreen keyboard. Press [OK].
   - Enter the number of copies using the dial pad.
4. Press [Options] > [Advanced Settings] > [Ink Save Mode].
5. Read and confirm the displayed list of settings you have selected, and then press [OK].
6. When you have finished changing settings, press [Mono Start] or [Colour Start].

MFC-J3930DW

1. Load your document.
2. Press [Copy].
3. Enter the number of copies in one of the following ways:
   - Press [-] or [+] on the touchscreen.
   - Press ×01 to display the keyboard on the touchscreen, and then enter the number of copies using the touchscreen keyboard. Press [OK].
   - Enter the number of copies using the dial pad.
4. Press [Options] > [Advanced Settings] > [Ink Save Mode].
5. Read and confirm the displayed list of settings you have selected, and then press [OK].
6. When you have finished changing settings, press [Mono Start] or [Colour Start].

Related Information

- Copy

Copy Options

MFC-J3530DW

To change copy settings, press the [Options] button.

Option	Description	
Quality	Select the Copy resolution for your type of document.	
Paper Type	Select a paper type. If copying on special paper, set the machine for the type of paper you are using to get the best print quality.	
Paper Size	Select a paper size. If copying on paper other than A4 size, you must change the Paper Size setting.	
Enlarge/Reduce	100%	-
	Enlarge	Select an enlargement ratio for the next copy.
	Reduce	Select a reduction ratio for the next copy.
	Fit to Page	Adjusts the copy size to fit on the paper size you have set.
	Custom(25-400%)	Enter an enlargement or reduction ratio.
Density	Increase the density to make the text darker. Decrease the density to make the text lighter.	
Stack/Sort	Select to stack or sort multiple copies.	
	Stack 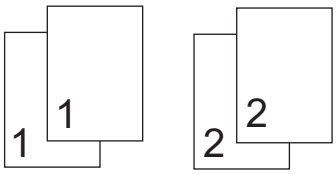	**Sort** 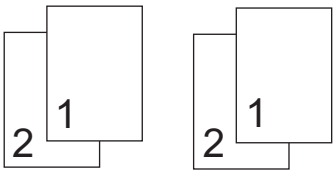
Page Layout **(Layout Format)**	Make N in 1, 2 in 1 ID, 1 to 2, or Poster copies. Select the layout format if needed.	
	4 in 1 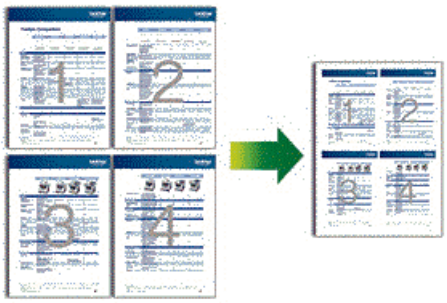	**Poster** 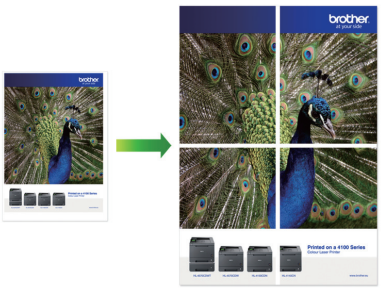
Auto Deskew (Using the scanner glass)	Correct a skewed copy. It is only available if the document is skewed by less than 3 degrees.	

Option	Description
2-sided Copy	Select to copy on both sides of the paper. **1-sided→2-sided** 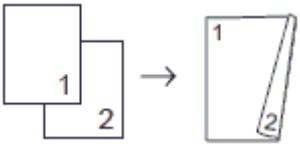 **2-sided→2-sided** 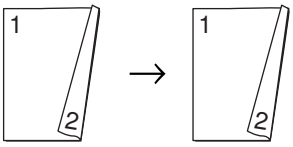
Advanced Settings	Ink Save Mode Prints colours lighter and emphasises the outlines of images. Thin Paper Copy Avoids bleeding through thin paper when copying. 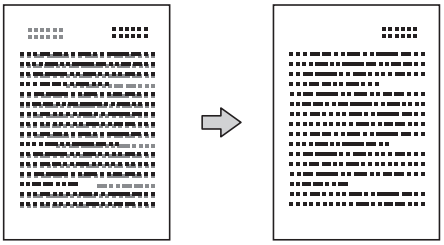 Book Copy Corrects dark borders and skew when copying from the scanner glass. 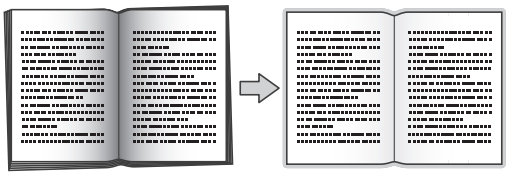 Watermark Copy Places text in your document as a watermark.

Option	Description
	Remove Background Colour Removes the document's background colour in copies. The white background becomes more apparent. This saves some ink and may make certain copies easier to read. 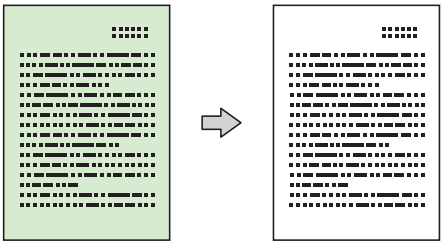
Set New Default	Saves the copy settings that you use most often by setting them as the default settings.
Factory Reset	Restores any changed copy settings to the factory settings.

- You can save the current settings by pressing [Save as Shortcut].
- The Ink Save Mode, Thin Paper Copy, Book Copy and Watermark Copy features are supported by technology from Reallusion, Inc.

MFC-J3930DW

To change copy settings, press the [Options] button.

Option	Description	
Quality	Select a copy resolution for your type of document.	
Paper Type	Select a paper type. If copying on special paper, set the machine for the type of paper you are using to get the best print quality.	
Paper Size	Select a paper size. If copying on paper other than A4 size, you must change the Paper Size setting.	
Tray Select	Select the tray with the best paper type and size for your document.	
Enlarge/Reduce	100%	-
	Enlarge	Select an enlargement ratio for the next copy.
	Reduce	Select a reduction ratio for the next copy.
	Fit to Page	Adjusts the copy size to fit on the paper size you have set.
	Custom(25-400%)	Enter an enlargement or reduction ratio.
Density	Increase the density to make the text darker. Decrease the density to make the text lighter.	
Stack/Sort	Select to stack or sort multiple copies.	
	Stack 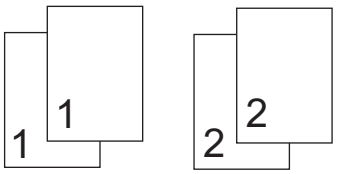	**Sort** 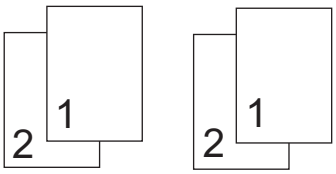
Page Layout (Layout Format)	Make N in 1, 2 in 1 ID, 1 to 2, or Poster copies. Select the layout format if needed.	

Option	Description	
	4 in 1 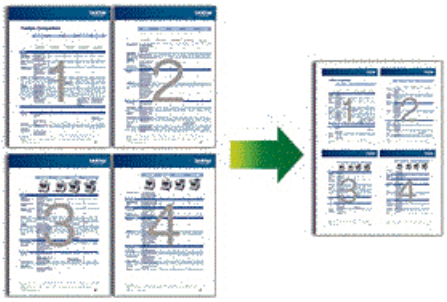	**Poster** 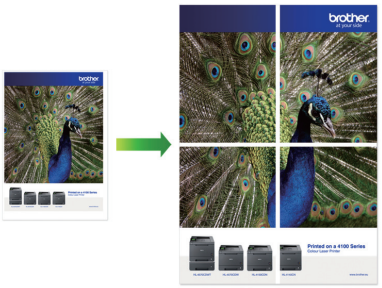
Auto Deskew (Using the scanner glass)	Correct a skewed copy. It is only available if the document is skewed by less than 3 degrees.	
2-sided Copy	Select to copy on both sides of the paper. **1-sided -> 2-sided** 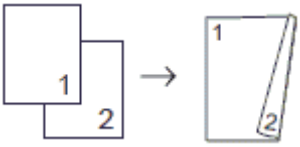 **2-sided -> 2-sided** 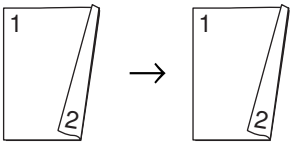 **2-sided→1-sided** 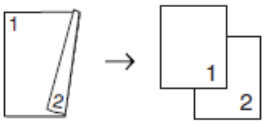	
Advanced Settings	Ink Save Mode Prints the colours lighter and emphasise the outlines of the images. 	
	Thin Paper Copy Avoids bleeding through on the thin paper when copying. 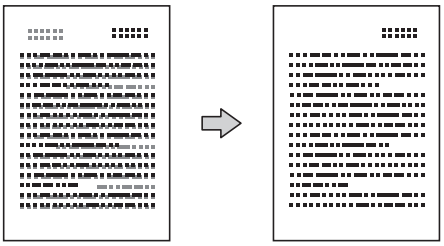	

Option	Description
	`Book Copy` Corrects dark borders and skew when copying from the scanner glass. 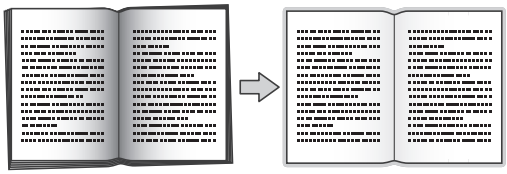
	`Watermark Copy` Places text into your document as a watermark.
	`Remove Background Colour` Removes the document's background colour in copies. The white background becomes more apparent. This saves some ink and may make certain copies easier to read. 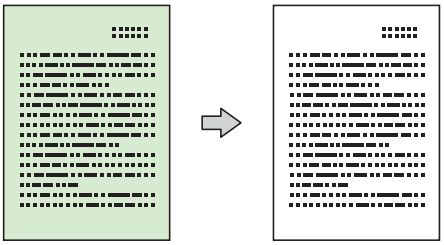

- You can save the current settings by pressing `[Save as Shortcut]`.
- The Ink Save Mode, Thin Paper Copy, Book Copy and Watermark Copy features are supported by technology from Reallusion, Inc.

Related Information

- Copy
- Copy a Document

Use Preset Copy Settings

Related Models: MFC-J3930DW

You can copy with a variety of settings by pressing the buttons that are already set up in the machine.

Press ▶ to access the preset copy settings.

Option	Description
A4 ⇒ A3	Enlarge a A4 document to A3.
Normal	Copy with the normal quality.
2sided(1⇒2)	Select a 2-sided copy layout from the options before you can start 2-sided copying. The layout of your document determines which 2-sided copy layout you should select.
2sided(2⇒2)	
2in1(ID)	Copy both sides of your identification card onto one page, keeping the original card size.
2in1 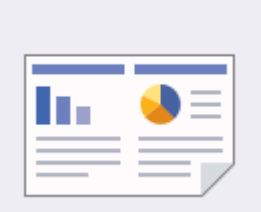	Copy two pages onto one page.

Option	Description
Poster 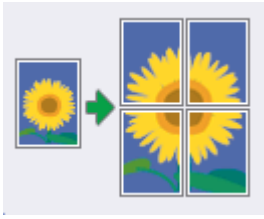	Divide your document into sections for assembling them into a poster.
Ink Save 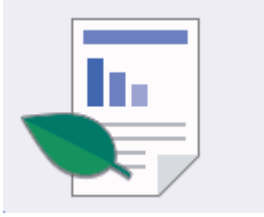	Reduce the amount of ink consumed for copies.
Book	Correct dark borders and skew when copying a book from the scanner glass.

Related Information

- Copy
- Copy a Document

Fax

- Send a Fax
- Receive a Fax
- Voice Operations and Fax Numbers
- Telephone Services and External Devices
- Fax Reports
- PC-FAX

Send a Fax

- Send a Fax from Your Brother Machine
- Send a 2-sided Fax from the ADF
- Send a Fax Manually
- Send a Fax at the End of a Conversation
- Send the Same Fax to More than One Recipient (Broadcasting)
- Send a Fax in Real Time
- Send a Fax at a Specified Time (Delayed Fax)
- Change the Fax Auto Redial Setting
- Cancel a Fax in Progress
- Check and Cancel a Pending Fax
- Fax Options

Send a Fax from Your Brother Machine

>> MFC-J3530DW
>> MFC-J3930DW

MFC-J3530DW

1. Load your document in the ADF or place it on the scanner glass.
2. Press [Fax].

If [Fax Preview] is set to [On], press [Fax] > [Sending Faxes].

The touchscreen displays:

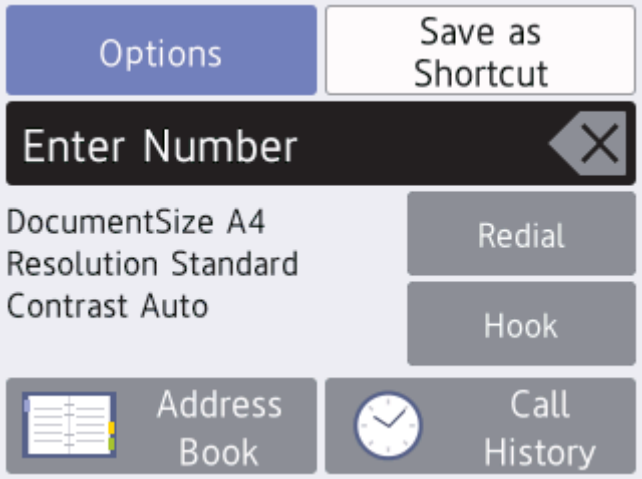

3. Enter the fax number in one of the following ways:
   - Dial Pad (Enter the fax number manually.)
     Press all digits of the number using the dial pad.
   - [Redial] (Redial the last number you dialled.)
     Press [Redial].
   - [Outgoing Call] (Select a number from the Outgoing Call history.)
     Press [Call History] > [Outgoing Call].
     Select the number you want, and then press [Apply].
   - [Caller ID History] (Select a number from the Caller ID history.)
     Press [Call History] > [Caller ID History].
     Select the number you want, and then press [Apply].
   - [Address Book] (Select a number from the Address Book.)
     Press [Address Book].
     Do one of the following:
     - Select the number you want, and then press [Apply].
     - Press , and then enter the first letter of the name and press [OK]. Press the name you want to dial. If the name has two numbers, press the number you want. Press [Apply].
4. Press [Options] > [Document Size].
   Select the document size option you want. Press [OK].
5. Change the fax settings, if needed.

Option	Description
Options	Press Options to change the fax settings for the next fax only. When finished, press OK.
Current setting indications	Press the area indicated on the screen to change these settings for the next fax only. • Document Size • Fax Resolution • Contrast When finished, press OK.

6. Press [Fax Start].
7. Do one of the following:
   - If you are using the ADF, the machine starts scanning and sending the document.
   - If you are using the scanner glass and selected [Mono] in the [Colour Setting], the machine starts scanning the first page.

     Go to the next step.
   - If you are using the scanner glass and selected [Colour] in the [Colour Setting], the touchscreen asks if you want to send a colour fax.

     Press [Yes (Colour fax)] to confirm. The machine starts dialling and sending the document.
8. When the touchscreen displays [Next page?], do one of the following:
   - Press [No] when finished scanning pages. The machine starts sending the document.
   - Press [Yes] to scan another page. Place the next page on the scanner glass, and then press [OK]. The machine starts scanning the page.

   Repeat this step for each additional page.

MFC-J3930DW

1. Load your document in the ADF or place it on the scanner glass.
2. Press [Fax].

If [Fax Preview] is set to [On], press [Fax] > [Sending Faxes].

The touchscreen displays:

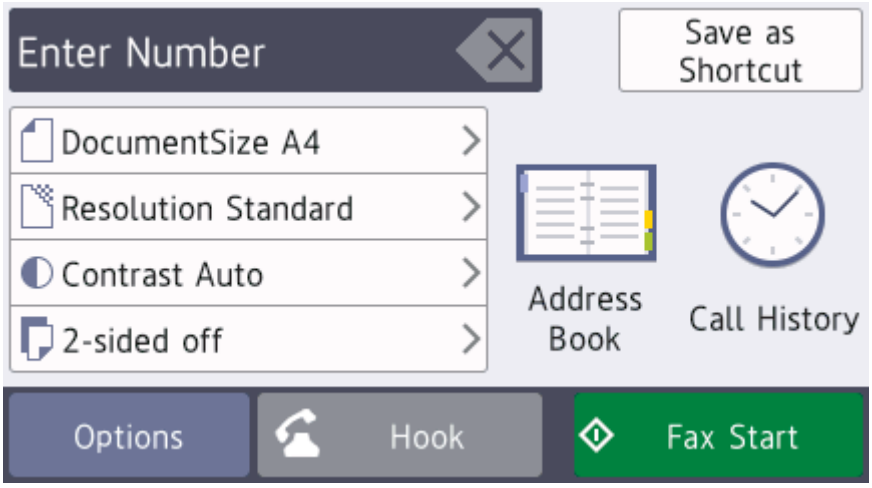

3. Enter the fax number in one of the following ways:
   - Dial Pad (Enter the fax number manually.)

     Press all digits of the number using the dial pad.

- [Redial] (Redial the last number you dialled.)

  Press [Call History] > [Redial].
- [Outgoing Call] (Select a number from the Outgoing Call history.)

  Press [Call History] > [Outgoing Call].

  Select the number you want, and then press [Apply].
- [Caller ID History] (Select a number from the Caller ID history.)

  Press [Call History] > [Caller ID History].

  Select the number you want, and then press [Apply].
- [Address Book] (Select a number from the Address Book.)

  Press [Address Book].

  Do one of the following:
  - Select the number you want, and then press [Apply].
  - Press , and then enter the first letter of the name and press [OK]. Press the name you want to dial. If the name has two numbers, press the number you want. Press [Apply].

4. Press [Document Size].

   Select the document size option you want.
5. Change the fax settings, if needed.

Option	Description
Options	Press Options to change the fax settings for the next fax only. When finished, press OK.
Current setting indications	Press the following icons to change these settings for the next fax only: • Document Size • Fax Resolution • Contrast • 2-sided Fax

6. Press [Fax Start].
7. Do one of the following:
   - If you are using the ADF, the machine starts scanning and sending the document.
   - If you are using the scanner glass and selected [Mono] in the [Colour Setting], the machine starts scanning the first page.

     Go to the next step.
   - If you are using the scanner glass and selected [Colour] in the [Colour Setting], the touchscreen asks if you want to send a colour fax.

     Press [Yes (Colour fax)] to confirm. The machine starts dialling and sending the document.
8. When the touchscreen displays [Next Page?], do one of the following:
   - Press [No] when finished scanning pages. The machine starts sending the document.
   - Press [Yes] to scan another page. Place the next page on the scanner glass, and then press [OK]. The machine starts scanning the page.

   Repeat this step for each additional page.

Related Information

- Send a Fax
- Fax Options

Send a 2-sided Fax from the ADF

Related Models: MFC-J3930DW

You must select a 2-sided scanning format before sending a 2-sided fax. Select either Long Edge or Short Edge, depending on the layout of your document.

1. Load your document in the ADF.
2. Press [Fax].

If [Fax Preview] is set to [On], press [Fax] > [Sending Faxes].

3. Press [Options] > [2-sided Fax].
4. Do one of the following:
   - If your document is flipped on the Long edge, press the [2-sided Scan: Long Edge] option.
   - If your document is flipped on the Short edge, press the [2-sided Scan: Short Edge] option.
5. Press [OK].
6. Enter the fax number.
7. Press [Fax Start].

Related Information

- Send a Fax

Send a Fax Manually

Manual fax transmission lets you hear the dialling, ringing and fax-receiving tones while sending a fax.

>> MFC-J3530DW
>> MFC-J3930DW

MFC-J3530DW

1. Load your document.
2. Press [Fax].

If [Fax Preview] is set to [On], press [Fax] > [Sending Faxes].

3. Press [Hook] and listen for a dial tone.
4. Enter the fax number.
5. When you hear fax tones, press [Fax Start].
   - If you are using the scanner glass, press [Send]. (When you set the [Fax Mode] option to [Advanced Mode].)

MFC-J3930DW

1. Load your document.
2. Press [Fax].

If [Fax Preview] is set to [On], press [Fax] > [Sending Faxes].

3. Press [Hook] and listen for a dial tone.
4. Enter the fax number.
5. When you hear fax tones, press [Fax Start].
   - If you are using the scanner glass, press [Send]. (When you set the [Fax Mode] option to [Advanced Mode].)

Related Information

- Send a Fax

Send a Fax at the End of a Conversation

At the end of a conversation, you can send a fax to the other party before you both hang up.

>> MFC-J3530DW
>> MFC-J3930DW

MFC-J3530DW

1. Ask the other party to wait for fax tones (beeps) and to press the Start key before hanging up.
2. Load your document.
3. Press to display the [Fax Start] button.
4. Press [Fax Start].
   - If you are using the scanner glass, press [Send]. (When you set the [Fax Mode] option to [Advanced Mode].)
5. Replace the handset of an external telephone.

MFC-J3930DW

1. Ask the other party to wait for fax tones (beeps) and to press the Start key before hanging up.
2. Load your document.
3. Press to display the [Fax Start] button.
4. Press [Fax Start].
   - If you are using the scanner glass, press [Send]. (When you set the [Fax Mode] option to [Advanced Mode].)
5. Replace the handset of an external telephone.

Related Information

- Send a Fax
- Set the Fax Logic (Sending and Receiving Sequence)

Set the Fax Logic (Sending and Receiving Sequence)

You can change the process of manual fax send or receive.

If you often send or receive a fax manually to/from the other party at the end of a conversation, set the [Fax Mode] to [Easy Mode].

If you set to [Easy Mode]: You can send or receive a fax manually just simply press [Fax Start]. If you are a caller, press [Fax Start] to send a fax. If you are a receiver, press [Fax Start] to receive a fax.

If you set to [Advanced Mode]: No matter you are a caller or receiver, you can select you will send or receive a fax manually. When you press [Fax Start], the machine will ask you: [Send/Receive?]. If you want to send a fax, press [Send]. If you want to receive a fax, press [Receive].

Even if you set either [Easy Mode] or [Advanced Mode] and if there is a document in the ADF, the document in the ADF will be sent by pressing [Fax Start].

>> MFC-J3530DW
>> MFC-J3930DW

MFC-J3530DW

1. Press [Settings] > [All Settings] > [Fax] > [Miscellaneous] > [Fax Mode].
2. Press [Easy Mode] or [Advanced Mode].
3. Press .

MFC-J3930DW

1. Press [Settings] > [All Settings] > [Fax] > [Miscellaneous] > [Fax Mode].
2. Press [Easy Mode] or [Advanced Mode].
3. Press .

Related Information

- Send a Fax at the End of a Conversation
- Receive a Fax at the End of a Telephone Conversation

Send the Same Fax to More than One Recipient (Broadcasting)

Use the Broadcasting feature to send the same fax to multiple fax numbers at the same time.

- This feature is available only for monochrome faxes.
- Address Book numbers must be stored in the machine's memory before they can be used in a broadcast.
- Group numbers must also be stored in the machine's memory before they can be used in a broadcast. Group numbers include many stored Address Book numbers for easier dialling.

>> MFC-J3530DW
>> MFC-J3930DW

MFC-J3530DW

You can include Groups, Address Book numbers and up to 50 manually-dialled numbers in the same broadcast.

If you did not use any of the Address Book numbers for Groups, you can broadcast faxes to as many as 250 different numbers.

1. Load your document.
2. Press [Fax].

   If [Fax Preview] is set to [On], press [Fax] > [Sending Faxes].

3. Press [Options] > [Broadcasting].
4. Press [Add Number].

   You can add numbers to the broadcast in the following ways:

   - Press [Add Number] and enter a fax number using the dial pad. Press [OK].

     If you downloaded Internet Fax:

     To broadcast using an email address, press , enter the email address, and press [OK].

   - Press [Add from Address book]. Press ▲ or ▼ to display the numbers you want to add to the broadcast. Select the check boxes of the numbers you want to add.

     When finished, press [OK].
   - Press [Search in Address book]. Press the first letter of the name and press [OK]. Press the name, and then press the number you want to add.

   Repeat this step to enter additional fax numbers.
5. When finished, press [OK].
6. Press [Fax Start].
7. Do one of the following:
   - If you are using the ADF, the machine starts scanning and sending the document.
   - If you are using the scanner glass, the machine starts scanning the first page.

     When the touchscreen displays [Next page?], do one of the following:

     - Press [No] when finished scanning pages. The machine starts sending the document.
     - Press [Yes] to scan another page. Place the next page on the scanner glass, and then press [OK]. The machine starts scanning the page.

     Repeat this step for each additional page.

If the [Out of Memory] message appears, press ✕ or [Quit] to cancel or [Send Now] to send the pages scanned so far.

MFC-J3930DW

You can include Groups, Address Book numbers and up to 50 manually-dialled numbers in the same broadcast.

If you did not use any of the Address Book numbers for Groups, you can broadcast faxes to as many as 250 different numbers.

1. Load your document.
2. Press [Fax].

If [Fax Preview] is set to [On], press [Fax] > [Sending Faxes].

3. Press [Options] > [Broadcasting].
4. Press [Add Number].

   You can add numbers to the broadcast in the following ways:

   - Press [Add Number] and enter a fax number using the dial pad. Press [OK].

   If you downloaded Internet Fax:

   To broadcast using an email address, press , enter the email address, and press [OK].

   - Press [Add from Address book]. Swipe up or down or press ▲ or ▼ to display the numbers you want to add to the broadcast. Select the check boxes of the numbers you want to add them.

     When finished, press [OK].
   - Press [Search in Address book]. Press the first letter of the name and press [OK]. Press the name, and then press the number you want to add.

   Repeat this step to enter additional fax numbers.
5. When finished, press [OK].
6. Press [Fax Start].
7. Do one of the following:
   - If you are using the ADF, the machine starts scanning and sending the document.
   - If you are using the scanner glass, the machine starts scanning the first page.

     When the touchscreen displays [Next Page?], do one of the following:

     - Press [No] when finished scanning pages. The machine starts sending the document.
     - Press [Yes] to scan another page. Place the next page on the scanner glass, and then press [OK]. The machine starts scanning the page.

     Repeat this step for each additional page.

- The machine's available memory will vary depending on the types of jobs in the memory and the numbers used for broadcasting. If you broadcast to the maximum number available, you cannot use dual access and delayed fax.
- If the [Out of Memory] message appears, press ✕ or [Quit] to cancel or [Send Now] to send the pages scanned so far.

Related Information

- Send a Fax
- Cancel a Broadcast in Progress

- Set up Groups for Broadcasting
- Enter Text on Your Brother Machine

Cancel a Broadcast in Progress

While broadcasting you can cancel the fax currently being sent or the whole broadcast job.

>> MFC-J3530DW
>> MFC-J3930DW

MFC-J3530DW

1. Press to return to the Home screen.
2. Press .
3. Do one of the following:
   - To cancel the entire broadcast, press [Entire Broadcast]. Press [Yes] to confirm or press [No] to exit without cancelling.
   - To cancel the current number being dialled, press the name or number on the touchscreen. Press [Yes] to confirm or press [No] to exit without cancelling.
   - To exit without cancelling, press .

MFC-J3930DW

1. Press to return to the Home screen.
2. Press .
3. Do one of the following:
   - To cancel the entire broadcast, press [Entire Broadcast]. Press [Yes] to confirm or press [No] to exit without cancelling.
   - To cancel the current number being dialled, press the name or number on the touchscreen. Press [Yes] to confirm or press [No] to exit without cancelling.
   - To exit without cancelling, press .

Related Information

- Send the Same Fax to More than One Recipient (Broadcasting)

Send a Fax in Real Time

When sending a fax, the machine scans the document into the memory before sending it. As soon as the telephone line is free, the machine starts dialling and sending. If you want to send an important document immediately without waiting for the machine to retrieve the scan from its memory, turn on [Real Time TX].

- If you are sending a colour fax or if the machine's memory is full and you are sending a monochrome fax from the ADF, the machine sends the document in real time (even if [Real Time TX] is set to [Off]).
- In Real Time Transmission, the automatic redial feature does not work when using the scanner glass.

>> MFC-J3530DW
>> MFC-J3930DW

MFC-J3530DW

1. Load your document.
2. Press [Fax].

If [Fax Preview] is set to [On], press [Fax] > [Sending Faxes].

3. Press [Options] > [Real Time TX].
4. Press [On] (or [Off]).
5. Press [OK].
6. Enter the fax number.
7. Press [Fax Start].

MFC-J3930DW

1. Load your document.
2. Press [Fax].

If [Fax Preview] is set to [On], press [Fax] > [Sending Faxes].

3. Press [Options] > [Real Time TX].
4. Press [On] (or [Off]).
5. Press [OK].
6. Enter the fax number.
7. Press [Fax Start].

Related Information

- Send a Fax

Send a Fax at a Specified Time (Delayed Fax)

You can store up to 50 faxes in the machine's memory to be sent within the next twenty-four hour period.

This feature is available only for monochrome faxes.

>> MFC-J3530DW
>> MFC-J3930DW

MFC-J3530DW

1. Load your document.
2. Press [Fax].

If [Fax Preview] is set to [On], press [Fax] > [Sending Faxes].

3. Press [Options] > [Delayed Fax].
4. Press [Delayed Fax].
5. Press [On].
6. Press [Set Time].
7. Enter the time you want the fax to be sent using the touchscreen. Press [OK].

The number of pages you can scan into the memory depends on the amount and type of data.

8. Press [OK].
9. Enter the fax number.
10. Press [Fax Start].
    - If you are using the scanner glass, go to the next step.
11. When the touchscreen displays [Next page?], do one of the following:
    - Press [No] when finished scanning pages.
    - Press [Yes] to scan another page. Place the next page on the scanner glass, and then press [OK]. The machine starts scanning the page.

    Repeat this step for each additional page.

MFC-J3930DW

1. Load your document.
2. Press [Fax].

If [Fax Preview] is set to [On], press [Fax] > [Sending Faxes].

3. Press [Options] > [Delayed Fax].
4. Press [Delayed Fax].
5. Press [On].
6. Press [Set Time].
7. Enter the time you want the fax to be sent using the touchscreen. Press [OK].

The number of pages you can scan into the memory depends on the amount and type of data.

8. Press [OK].

9. Enter the fax number.
10. Press [Fax Start].
    - If you are using the scanner glass, go to the next step.
11. When the touchscreen displays [Next Page?], do one of the following:
    - Press [No] when finished scanning pages.
    - Press [Yes] to scan another page. Place the next page on the scanner glass, and then press [OK]. The machine starts scanning the page.

    Repeat this step for each additional page.

Related Information

- Send a Fax

Change the Fax Auto Redial Setting

If you are sending a fax automatically and the line is busy when the Fax Auto Redial setting is set to [On], the machine redials up to three times at five minute intervals.

The default setting is [On].

>> MFC-J3530DW
>> MFC-J3930DW

MFC-J3530DW

1. Press [Settings] > [All Settings] > [Initial Setup] > [Fax Auto Redial].
2. Press [On] or [Off].
3. Press .

MFC-J3930DW

1. Press [Settings] > [All Settings] > [Initial Setup] > [Fax Auto Redial].
2. Press [On] or [Off].
3. Press .

Related Information

- Send a Fax

Cancel a Fax in Progress

>> MFC-J3530DW
>> MFC-J3930DW

MFC-J3530DW

1. Press to return to the Home screen.
2. Press to cancel a fax that is already in process.
3. When you press while the machine is dialling or sending, the touchscreen displays [Cancel Job?]. Press [Yes].

MFC-J3930DW

1. Press to return to the Home screen.
2. Press to cancel a fax that is already in process.
3. When you press while the machine is dialling or sending, the touchscreen displays [Cancel Job?]. Press [Yes]

Related Information

- Send a Fax
- Telephone and Fax problems

Check and Cancel a Pending Fax

Follow these steps to view or to cancel faxes stored in the machine's memory and waiting to be sent. If there are no fax jobs in memory, the LCD displays [No Jobs Waiting]. You can cancel a fax job before it is sent.

>> MFC-J3530DW
>> MFC-J3930DW

MFC-J3530DW

1. Press [Settings] > [All Settings] > [Fax] > [Remaining Jobs].
2. Do the following for each fax job you want to check or cancel:
   a. Press ▲ or ▼ to scroll through the waiting jobs. If needed, press the job you want to cancel.
   b. Press [OK].
   c. Press [Yes] to confirm or press [No] to exit without cancelling.
3. When finished, press .

MFC-J3930DW

1. Press [Settings] > [All Settings] > [Fax] > [Remaining Jobs].
2. Do the following for each fax job you want to check or cancel:
   a. Swipe up or down or press ▲ or ▼ to scroll through the waiting jobs. If needed, press the job you want to cancel.
   b. Press [Cancel].
   c. Press [Yes] to confirm or press [No] to exit without cancelling.
3. When finished, press .

Related Information

- Send a Fax
- Telephone and Fax problems

Fax Options

MFC-J3530DW

To change fax-sending settings, press the [Options] button.

Option	Description
Fax Resolution	Set the resolution for outgoing faxes. The fax quality often can be improved by changing the Fax Resolution.
Contrast	Adjust the contrast. If your document is very light or very dark, changing the contrast may improve the fax quality.
Document Size	Set the document size for outgoing faxes.
Scan Long Paper	Scan a long document using the ADF.
Broadcasting (monochrome only)	Send the same fax message to more than one fax number at the same time.
Preview (monochrome only)	• Preview a fax message before you send it. • You cannot send a colour fax when Preview is set to On.
Colour Setting	Set whether faxes are sent in monochrome or colour. • Colour faxes cannot be stored in the machine's memory and the machine sends them immediately. • Use the ADF to send colour faxes with multiple pages. • You cannot send a colour fax when Preview is set to On.
Delayed Fax (monochrome only)	Set the time of day the delayed faxes will be sent.
Batch TX (monochrome only)	Economise by sending all delayed faxes scheduled for the same time and fax number as one fax to save transmission time.
Real Time TX	Send a fax immediately without waiting for the machine to retrieve the scan from its memory.
Overseas Mode	Set to On if you have difficulty sending faxes overseas.
Call History	Select a number from the Call History.
Address Book	Select a number from the Address Book.
Set New Default	Save your settings as the default.
Factory Reset	Restore all settings back to the factory settings.

You can save the current settings by pressing [Save as Shortcut].

You will be asked if you want to make this a One Touch Shortcut. Follow the LCD instructions.

MFC-J3930DW

To change fax-sending settings, press the [Options] button.

Option	Description
Fax Resolution	Set the resolution for outgoing faxes. The fax quality often can be improved by changing the Fax Resolution.
2-sided Fax	Set the 2-sided scanning format.

Option	Description
Contrast	Adjust the contrast. If your document is very light or very dark, changing the contrast may improve the fax quality.
Document Size	Set the document size for outgoing faxes.
Scan Long Paper	Scan a long document using the ADF.
Broadcasting (monochrome only)	Send the same fax message to more than one fax number at the same time.
Preview (monochrome only)	Preview a fax message before you send it.
Colour Setting	Set whether faxes are sent in monochrome or colour. • Colour faxes cannot be stored in the machine's memory and the machine sends them immediately. • Use the ADF to send colour faxes with multiple pages.
Delayed Fax (monochrome only)	Set the time of day the delayed faxes will be sent.
Batch TX (monochrome only)	Economise by sending all delayed faxes scheduled for the same time and fax number as one fax to save transmission time.
Real Time TX	Send a fax immediately without waiting for the machine to retrieve the scan from its memory.
Overseas Mode	Set to On if you have difficulty sending faxes overseas.
Set New Default	Save your settings as the default.
Factory Reset	Restore all settings back to the factory settings.

You can save the current settings by pressing [Save as Shortcut].

You will be asked if you want to make this a One Touch Shortcut. Follow the LCD instructions.

Related Information

- Send a Fax
- Send a Fax from Your Brother Machine

Receive a Fax

- Receive Mode Settings
- Fax Preview
- Shrink Page Size of an Oversized Incoming Fax
- Set the Fax Receive Stamp
- Receive a Fax at the End of a Telephone Conversation
- Memory Receive Options
- Remote Fax Retrieval

Receive Mode Settings

- Receive Modes Overview
- Choose the Correct Receive Mode
- Set the Number of Rings Before the Machine Answers (Ring Delay)
- Set Fax Detect

Receive Modes Overview

Mode	Function	Help
Fax Auto	Each call recognized as fax and send fax signal. However, you can answer the call within the number of rings.	Factory setting of Ring Delay is four. After ringing four times, the fax machine send fax-receiving signals automatically; If your machine is connecting an external answering phone device, and often use it to answer incoming calls, you could set the ring time through four to six times. Within the recommended ringing times, you can use the external answering phone device to answer and talk. [1]
Fax/Tel	Automatically determine whether the incoming call is telephone or fax calls. Non-Fax call will make a pseudo/double-ring to inform you answer the phone.	Factory setting of Ring Delay is four. According to incoming call after the fax machine rings four times: 1. For the fax call, send fax received signal; 2. For the telephone call, make a pseudo/double-ring, waiting for you answer the phone. If your machine is connecting an external answering phone device, you could set the ringing time through four to six times to answer the call. [1]
External TAD	The external answering machine (TAD) automatically answers every call. Voice messages are stored on the external TAD. Fax messages are printed.	Use this mode if you have connected an external answering machine to your machine. The TAD setting works only with an external answering machine. Ring Delay do not work in this setting.
Fax Manual	Machine doesn't recognize each call, only as a common phone call that you need to determine after answering the phone.	Answering the call, or if the caller wants to send you a fax, press Fax Start (under easy mode) to receive faxes. If your machine is connecting an external answering phone device, you can use the external answering phone device to answer and talk. [1]

Related Information

- Receive Mode Settings

[1] If the caller wants to send a fax during a call or the caller sends you a fax call, please press Fax Start (under easy mode) or press *51 on the external answering phone device (you have to turn on the remote codes first.) to give fax receiving signals.

Choose the Correct Receive Mode

The factory setting of Receive Mode is “Fax Auto”. Your machine will automatically receive any faxes that are sent to it. There are four Receive Modes of this machine as below.

Operation Display	Factory Setting Ring Delay
Fax Auto	Ring Delay: four times Fax detection: On
Fax/Tel	Ring Delay: four times
External TAD	
Fax Manual	

>> MFC-J3530DW
>> MFC-J3930DW

MFC-J3530DW

1. Press [Settings] > [All Settings] > [Fax] > [Setup Receive] > [Receive Mode].
2. Press ▲ or ▼ to display the [Fax Auto], [Fax/Tel], [External TAD], or [Manual] option, and then press the option you want.
3. Press .

MFC-J3930DW

1. Press [Settings] > [All Settings] > [Fax] > [Setup Receive] > [Receive Mode].
2. Press the [Fax Auto], [Fax/Tel], [External TAD] or [Fax Manual] option.
3. Press .

Related Information

- Receive Mode Settings
- Remote Retrieval Commands
- Connect an External TAD
- Telephone and Fax problems

Set the Number of Rings Before the Machine Answers (Ring Delay)

When somebody calls your machine, you will hear the normal telephone ring sound. The number of rings is set in the Ring Delay option.

- The Ring Delay setting sets the number of times the machine rings before it answers in [Fax Auto] and [Fax/Tel] modes.
- If you have external or extension telephones on the same line as the machine, select the maximum number of rings.

>> MFC-J3530DW
>> MFC-J3930DW

MFC-J3530DW

1. Press [Settings] > [All Settings] > [Fax] > [Setup Receive] > [Ring Delay].
2. Press the number of times you want the line to ring before the machine answers.

If you select [0], the machine will answer immediately and the line will not ring at all (available only for some countries).

3. Press .

MFC-J3930DW

1. Press [Settings] > [All Settings] > [Fax] > [Setup Receive] > [Ring Delay].
2. Press the number of times you want the line to ring before the machine answers.

If you select [0], the machine will answer immediately and the line will not ring at all (available only for some countries).

3. Press .

Related Information

- Receive Mode Settings
- Operation from External and Extension Telephones
- Set Fax Detect
- Telephone and Fax problems

Set Fax Detect

If Fax Detect is On: The machine receives a fax call automatically, even if you answer the call. When the message that your machine is receiving a fax appears on the LCD or when you hear “chirps” through the handset you are using, just replace the handset. Your machine will do the rest.

If Fax Detect is Off: If you are at the machine and answer a fax call by lifting the handset, press the Start button, and then select [Receive] to receive the fax. If you answered at an extension or external telephone, press ***51**.

- If Fax Detect is set to [On], but your machine does not connect a fax call when you lift an extension or external telephone handset, press the remote activation code ***51**.
- If you send faxes from a computer on the same telephone line and the machine intercepts them, set Fax Detect to [Off].

>> MFC-J3530DW
>> MFC-J3930DW

MFC-J3530DW

1. Press [Settings] > [All Settings] > [Fax] > [Setup Receive] > [Fax Detect].
2. Press [On] (or [Off]).
3. Press .

MFC-J3930DW

1. Press [Settings] > [All Settings] > [Fax] > [Setup Receive] > [Fax Detect].
2. Press [On] (or [Off]).
3. Press .

Related Information

- Receive Mode Settings
- Set the Number of Rings Before the Machine Answers (Ring Delay)
- Operation from External and Extension Telephones
- Use the Remote Codes
- Telephone and Fax problems

Fax Preview

Use the Fax Preview feature to view received faxes on the LCD.

- Set Fax Preview to On
- Preview New Faxes

Set Fax Preview to On

- This feature is available only for monochrome faxes.
- When Fax Preview is turned on, a backup copy of received faxes will not be printed for Fax Forwarding, PC-Fax Receiving and Forward to Cloud operations, even if you set Backup Print to [On].
- Although printed faxes show the received date and time when Fax Receive Stamp is turned on, the Fax Preview screen will not display the received date and time.

>> MFC-J3530DW
>> MFC-J3930DW

MFC-J3530DW

1. Press [Settings].
2. Press [Fax Preview].
3. Press [On] (or [Off]).

   The touchscreen displays a message saying future received faxes will not be printed.
4. Press [Yes].
5. Press .

If faxes are stored in the memory when you change Fax Preview to Off, do one of the following:

- If you do not want to print the stored faxes, press [Continue].
  Press [Yes] to confirm.

  Your faxes will be deleted.
- To print all the stored faxes, press [Print All Faxes Before Delete].
- If you do not want to turn off Fax Preview, press [Cancel].

MFC-J3930DW

1. Press [Settings].
2. Press [Fax Preview].
3. Press [On] (or [Off]).

   The touchscreen displays a message saying future received faxes will not be printed.
4. Press [Yes].
5. Press .

If faxes are stored in the memory when you change Fax Preview to Off, do one of the following:

- If you do not want to print the stored faxes, press [Continue].
  Press [Yes] to confirm.

  Your faxes will be deleted.
- To print all the stored faxes, press [Print All Faxes Before Delete].
- If you do not want to turn off Fax Preview, press [Cancel].

Related Information

- Fax Preview

Preview New Faxes

When a fax is received, a message appears on the LCD.

- This feature is available only for monochrome faxes.
- To see a fax you already previewed, press [Fax] and [Received Faxes].

>> MFC-J3530DW
>> MFC-J3930DW

MFC-J3530DW

1. Press to view new faxes.

2. The fax list includes old and new faxes. A blue mark appears next to new faxes.
   Press the fax you want.

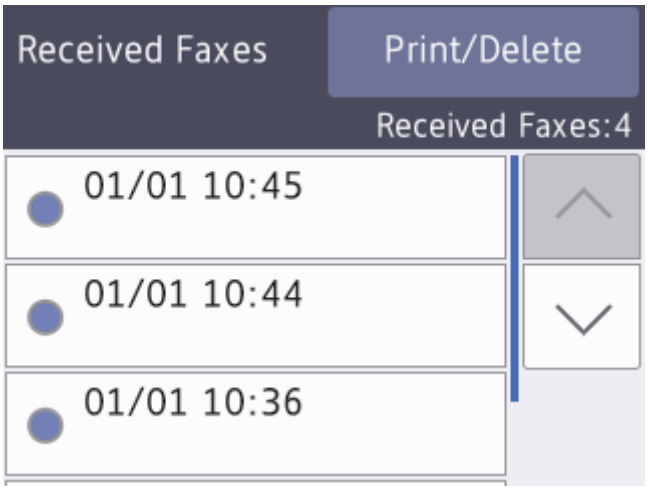

If you want to print or delete all the faxes in the list, press [Print/Delete].
Do one of the following:
- Press [Print All(New Faxes)] to print all faxes you have not yet viewed.
- Press [Print All(Old Faxes)] to print all faxes you have viewed.
- Press [Delete All(New Faxes)] to delete all faxes you have not yet viewed.
- Press [Delete All(Old Faxes)] to delete all faxes you have viewed.

3. Perform the following operations by pressing the buttons shown in the table:

Button	Result
	Enlarge the fax.
	Reduce the fax.
or	Scroll vertically.
or	Scroll horizontally.
	Rotate the fax clockwise.
	Delete the fax. Press `Yes` to confirm.
	Go back to the previous page.
	Go to the next page.
	Go back to the fax list.
`Start`	Print the fax. If the fax is a single page, it starts printing. A touchscreen message asks if you want to delete the fax from the machine's memory. To delete the fax, press `Yes`. To keep the fax in the machine's memory, press `No`. If the fax has multiple pages, do one of the following: • Press `Print All Pages` to print the whole message. A touchscreen message asks if you want to delete the fax from the machine's memory. To delete the fax, press `Yes`. To keep the fax in the machine's memory, press `No`. • Press `Print Displayed Only` to print only the displayed page. • Press `Print From Displayed` to print from the displayed page to the last page.

- If your fax is large there may be a delay before it is displayed.
- The touchscreen displays the current page number and total pages of the fax message. If your fax message is over 99 pages, the total number of pages appears as “XX.”

4. Press .

MFC-J3930DW

1. Press to view new faxes.

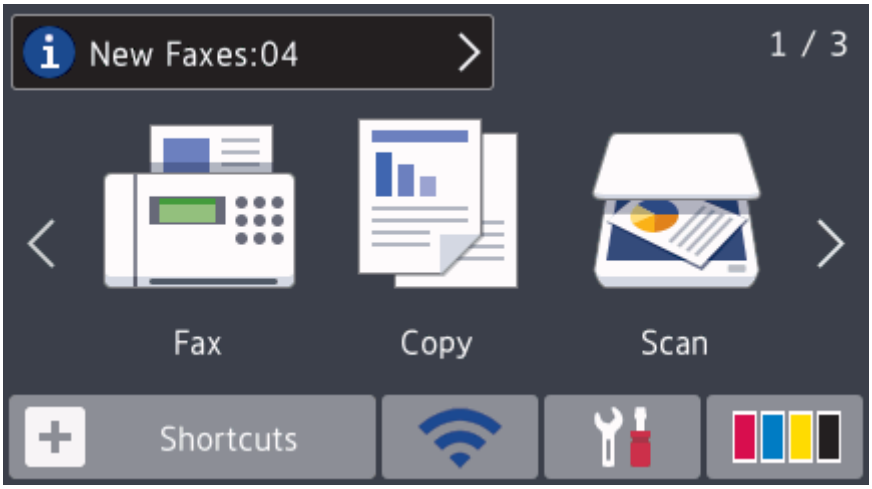

2. The fax list includes old and new faxes. A blue mark appears next to new faxes.
   Press the fax you want.

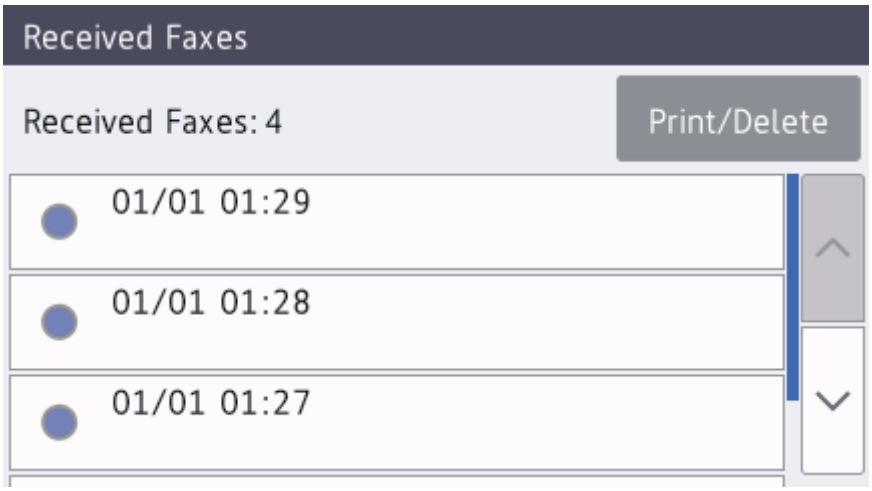

If you want to print or delete all the faxes in the list, press `[Print/Delete]`.
Do one of the following:

- Press `[Print All(New Faxes)]` to print all faxes you have not yet viewed.
- Press `[Print All(Old Faxes)]` to print all faxes you have viewed.
- Press `[Delete All(New Faxes)]` to delete all faxes you have not yet viewed.
- Press `[Delete All(Old Faxes)]` to delete all faxes you have viewed.

3. Perform the following operations by pressing the buttons shown in the table:

Button	Result
	Enlarge the fax.
	Reduce the fax.
or	Scroll vertically.
or	Scroll horizontally.
	Rotate the fax clockwise.
	Delete the fax. Press `Yes` to confirm.

Button	Result
	Go back to the previous page.
	Go to the next page.
	Go back to the fax list.
Start	Print the fax. If the fax is a single page, it starts printing. The touchscreen asks you to delete the fax in the memory. To delete the fax, press Yes. To keep the fax in the memory, press No. If the fax has multiple pages, do one of the following: • Press Print All Pages to print the whole message. The touchscreen asks you to delete the fax in the memory. To delete the fax, press Yes. To keep the fax in the memory, press No. • Press Print Displayed Only to print only the displayed page. • Press Print From Displayed to print from the displayed page to the last page.

- If your fax is large there may be a delay before it is displayed.
- The touchscreen displays the current page number and total pages of the fax message. If your fax message is over 99 pages, the total number of pages appears as “XX.”

4. Press .

Related Information

- Fax Preview

Shrink Page Size of an Oversized Incoming Fax

When the [Auto Reduction] feature is [On], your Brother machine reduces any oversized incoming fax page to fit on your paper. The machine calculates the reduction ratio using the page size of the fax and your Paper Size setting.

>> MFC-J3530DW
>> MFC-J3930DW

MFC-J3530DW

1. Press [Settings] > [All Settings] > [Fax] > [Setup Receive] > [Auto Reduction].
2. Press [On] (or [Off]).
3. Press .

MFC-J3930DW

1. Press [Settings] > [All Settings] > [Fax] > [Setup Receive] > [Auto Reduction].
2. Press [On] (or [Off]).
3. Press .

Related Information

- Receive a Fax
- Paper Settings
- Paper Handling and Printing Problems

Set the Fax Receive Stamp

Set the machine to print the date and time of receipt at the top of each incoming fax page. Make sure you have set the current date and time on the machine.

This feature is available only for monochrome faxes.

>> MFC-J3530DW
>> MFC-J3930DW

MFC-J3530DW

1. Press [Settings] > [All Settings] > [Fax] > [Setup Receive] > [Fax Rx Stamp].
2. Press [On] (or [Off]).
3. Press .

MFC-J3930DW

1. Press [Settings] > [All Settings] > [Fax] > [Setup Receive] > [Fax Rx Stamp].
2. Press [On] (or [Off]).
3. Press .

Related Information

- Receive a Fax

Receive a Fax at the End of a Telephone Conversation

If you are speaking on the telephone connected to your Brother machine and the other party is also speaking on a telephone connected to his fax machine, at the end of the conversation, the other party can send you a fax before you both hang up.

- Your machine's ADF must be empty.

>> MFC-J3530DW
>> MFC-J3930DW

MFC-J3530DW

1. Ask the other party to load the fax and to press the Start or Send key.
2. Press to display the [Fax Start] button.
3. When you hear CNG tones (slow, repeated beeps), press [Fax Start].
4. Press [Receive] to receive the fax. (When you set the [Fax Mode] option to [Advanced Mode].)
5. Replace the external handset.

MFC-J3930DW

1. Ask the other party to load the fax and to press the Start or Send key.
2. Press to display the [Fax Start] button.
3. When you hear CNG tones (slow, repeated beeps), press [Fax Start].
4. Press [Receive] to receive the fax. (When you set the [Fax Mode] option to [Advanced Mode].)
5. Replace the external handset.

Related Information

- Receive a Fax
- Set the Fax Logic (Sending and Receiving Sequence)

Set the Fax Logic (Sending and Receiving Sequence)

You can change the process of manual fax send or receive.

If you often send or receive a fax manually to/from the other party at the end of a conversation, set the [Fax Mode] to [Easy Mode].

If you set to [Easy Mode]: You can send or receive a fax manually just simply press [Fax Start]. If you are a caller, press [Fax Start] to send a fax. If you are a receiver, press [Fax Start] to receive a fax.

If you set to [Advanced Mode]: No matter you are a caller or receiver, you can select you will send or receive a fax manually. When you press [Fax Start], the machine will ask you: [Send/Receive?]. If you want to send a fax, press [Send]. If you want to receive a fax, press [Receive].

Even if you set either [Easy Mode] or [Advanced Mode] and if there is a document in the ADF, the document in the ADF will be sent by pressing [Fax Start].

>> MFC-J3530DW
>> MFC-J3930DW

MFC-J3530DW

1. Press [Settings] > [All Settings] > [Fax] > [Miscellaneous] > [Fax Mode].
2. Press [Easy Mode] or [Advanced Mode].
3. Press .

MFC-J3930DW

1. Press [Settings] > [All Settings] > [Fax] > [Miscellaneous] > [Fax Mode].
2. Press [Easy Mode] or [Advanced Mode].
3. Press .

Related Information

- Send a Fax at the End of a Conversation
- Receive a Fax at the End of a Telephone Conversation

Memory Receive Options

Use Memory Receive options to direct incoming faxes while you are away from the machine. You can use only one Memory Receive option at a time.

Memory Receive can be set to:

- Fax Forwarding
- Fax Storage
- PC-Fax Receive
- Forward to Cloud

  The machine forwards your received faxes to the online services.
- Off

This feature is available only for monochrome faxes.

- Forward Incoming Faxes to Another Machine
- Store Incoming Faxes in the Machine's Memory
- Use PC-Fax Receive to Transfer Received Faxes to Your Computer (Windows only)
- Change Memory Receive Options
- Turn Off Memory Receive
- Print a Fax Stored in the Machine's Memory
- Turn On FaxForward to Cloud or E-mail

Forward Incoming Faxes to Another Machine

Use the Fax Forwarding feature to automatically forward your incoming faxes to another machine.

This feature is available only for monochrome faxes.

>> MFC-J3530DW
>> MFC-J3930DW

MFC-J3530DW

1. Press [Settings] > [All Settings] > [Fax] > [Setup Receive] > [Memory Receive].
2. Press ▲ or ▼ to display the [Fax Forward] option, and then press it.
3. Enter the forwarding fax number (up to 20 digits) using the dial pad.
   Press [OK].

I-Fax users:

To forward a fax to an email address, press , enter the email address, and then press [OK].

4. Press [Backup Print: On] or [Backup Print: Off].

- If you select [Backup Print: On], the machine prints received faxes at your machine so you will have a copy.
- When Fax Preview is turned on, a backup copy of received faxes will not be printed, even if you select [Backup Print: On].
- If you receive a colour fax, your machine only prints the colour fax and does not forward it to the Fax Forwarding number you programmed.

5. Press .

MFC-J3930DW

1. Press [Settings] > [All Settings] > [Fax] > [Setup Receive] > [Memory Receive].
2. Swipe up or down or press ▲ or ▼ to display the [Fax Forward] option, and then press [Fax Forward].
3. Enter the forwarding fax number (up to 20 digits) using the dial pad. Press [OK].

I-Fax users:

To forward a fax to an email address, press , enter the email address, and then press [OK].

4. Press [Backup Print: On] or [Backup Print: Off].

- If you select [Backup Print: On], the machine prints received faxes at your machine so you will have a copy.
- When Fax Preview is turned on, a backup copy of received faxes will not be printed, even if you select [Backup Print: On].
- If you receive a colour fax, your machine only prints the colour fax and does not forward it to the Fax Forwarding number you programmed.

5. Press .

Related Information

- Memory Receive Options

Store Incoming Faxes in the Machine's Memory

Use the Fax Storage feature to store incoming faxes in the machine's memory. Retrieve your stored fax messages from your fax machine when you are at another location using the Remote Retrieval commands. Your machine prints a backup copy of each stored fax.

- This feature is available only for monochrome faxes.

>> MFC-J3530DW
>> MFC-J3930DW

MFC-J3530DW

1. Press [Settings] > [All Settings] > [Fax] > [Setup Receive] > [Memory Receive].
2. Press ▲ or ▼ to display the [Fax Storage] option, and then press it.
3. Press .

MFC-J3930DW

1. Press [Settings] > [All Settings] > [Fax] > [Setup Receive] > [Memory Receive].
2. Swipe up or down or press ▲ or ▼ to display the [Fax Storage] option, and then press it.
3. Press .

Related Information

- Memory Receive Options
- Forward Faxes Remotely
- Print a Fax Stored in the Machine's Memory
- Remote Retrieval Commands

Use PC-Fax Receive to Transfer Received Faxes to Your Computer (Windows only)

Turn on the PC-Fax Receive feature, automatically store incoming faxes to your machine's memory, and then send them to your computer. Use your computer to view and store these faxes.

- This feature is available only for monochrome faxes. When you receive a colour fax, your machine prints the colour fax but does not send the fax to your computer.
- Before you can set up PC-Fax Receive, you must install the Brother software and drivers on your computer. Make sure your computer is connected and turned on. You must have the PC-FAX Receiving software running on your computer.

Even if your computer is turned off, your machine will receive and store faxes in its memory. When you start your computer and the PC-FAX Receiving software runs, your machine transfers faxes to your computer automatically.

>> MFC-J3530DW
>> MFC-J3930DW

MFC-J3530DW

1. Press [Settings] > [All Settings] > [Fax] > [Setup Receive] > [PC Fax Receive].
2. Press [On].

   The touchscreen displays the message [Run the PC-Fax Receive program on your computer.]
3. Press [OK].
4. Press [<USB>] or press the name of the computer you want to receive faxes if you are on a network. Press [OK].
5. Press [Backup Print: On] or [Backup Print: Off].

When Fax Preview is turned on, a backup copy of received faxes will not be printed, even if you select [Backup Print: On].

6. Press .

To change the destination computer, repeat these steps.

MFC-J3930DW

1. Press [Settings] > [All Settings] > [Fax] > [Setup Receive] > [PC Fax Receive].
2. Press [On].

   The touchscreen displays the message [Run the PC-Fax Receive program on your computer.]
3. Press [OK].
4. Press [<USB>] or press the name of the computer you want to receive faxes if you are on a network. Press [OK].
5. Press [Backup Print: On] or [Backup Print: Off].

When Fax Preview is turned on, a backup copy of received faxes will not be printed, even if you select [Backup Print: On].

6. Press .

To change the destination computer, repeat these steps.

Related Information

- Memory Receive Options
- Transfer Your Faxes or Fax Journal Report
- Transfer Faxes to Your Computer
- Receive Faxes Using PC-FAX Receive (Windows)

Change Memory Receive Options

If there are faxes in your machine's memory when you change any Memory Receive option, the LCD displays one of the following questions:

>> MFC-J3530DW
>> MFC-J3930DW

MFC-J3530DW

- **If received faxes have already been printed, the touchscreen displays [Erase all documents?]**
  - If you press [Yes], faxes in the memory will be erased before the setting changes.
  - If you press [No], faxes in the memory will not be erased and the setting will be unchanged.
- **If unprinted faxes are in the machine's memory, the touchscreen displays [Print all faxes?]**
  - If you press [Yes], faxes in the memory will be printed before the setting changes.
  - If you press [No], faxes in the memory will not be printed and the setting will be unchanged.
- If received faxes are left in the machine's memory when you change to [PC Fax Receive] from another option ([Fax Forward], [Forward to Cloud], or [Fax Storage]), press [<USB>] or the name of the computer if you are on a network, and then press [OK]. You will be asked if you want to turn on Backup Print.

  The touchscreen displays:

  [Send Fax to PC?]
  - If you press [Yes], faxes in the memory will be sent to your computer before the setting changes.
  - If you press [No], faxes in the memory will not be erased and the setting will be unchanged.

MFC-J3930DW

- **If received faxes have already been printed, the touchscreen displays [Erase all documents?]**
  - If you press [Yes], faxes in the memory will be erased before the setting changes.
  - If you press [No], faxes in the memory will not be erased and the setting will be unchanged.
- **If unprinted faxes are in the machine's memory, the touchscreen displays [Print all faxes?]**
  - If you press [Yes], faxes in the memory will be printed before the setting changes.
  - If you press [No], faxes in the memory will not be printed and the setting will be unchanged.
- If received faxes are left in the machine's memory when you change to [PC Fax Receive] from another option ([Fax Forward], [Forward to Cloud], or [Fax Storage]), press [<USB>] or the name of the computer if you are on a network, and then press [OK]. You will be asked if you want to turn on Backup Print.

  The touchscreen displays:

  [Send Fax to PC?]
  - If you press [Yes], faxes in the memory will be sent to your computer before the setting changes.
  - If you press [No], faxes in the memory will not be erased and the setting will be unchanged.

Related Information

- Memory Receive Options
- Turn Off Memory Receive

Turn Off Memory Receive

Turn off Memory Receive if you do not want the machine to save or transfer incoming faxes.

>> MFC-J3530DW
>> MFC-J3930DW

MFC-J3530DW

1. Press [Settings] > [All Settings] > [Fax] > [Setup Receive] > [Memory Receive].
2. Press [Off].

The touchscreen displays [Print all faxes?] or [Erase all documents?] if received faxes are in your machine's memory.

3. Press .

MFC-J3930DW

1. Press [Settings] > [All Settings] > [Fax] > [Setup Receive] > [Memory Receive].
2. Press [Off].

The touchscreen displays [Print all faxes?] or [Erase all documents?] if received faxes are in your machine's memory.

3. Press .

Related Information

- Memory Receive Options
- Change Memory Receive Options
- Error and Maintenance Messages
- Telephone and Fax problems

Print a Fax Stored in the Machine's Memory

- This feature is available only for monochrome faxes.
- After you print the fax, it is erased from the machine's memory.

>> MFC-J3530DW
>> MFC-J3930DW

MFC-J3530DW

If you select [Fax Storage], you can print all faxes from the memory.

1. Press [Settings] > [All Settings] > [Fax] > [Print Document].

You can also print the faxes from the memory by pressing [Stored Faxes] on the touchscreen.

2. Press [Yes].

MFC-J3930DW

If you select [Fax Storage], you can print all faxes from the memory.

1. Press [Settings] > [All Settings] > [Fax] > [Print Document].

You can also print the faxes from the memory by pressing [Stored Faxes] on the touchscreen.

2. Press [Yes].

Related Information

- Memory Receive Options
- Store Incoming Faxes in the Machine's Memory
- Error and Maintenance Messages
- Telephone and Fax problems

Remote Fax Retrieval

Use Remote Retrieval to call your machine from any touch-tone telephone or fax machine, and use a remote access code and remote commands to retrieve fax messages.

- Set a Remote Access Code
- Use Your Remote Access Code
- Remote Retrieval Commands
- Forward Faxes Remotely
- Change the Fax Forwarding Number

Set a Remote Access Code

Set a Remote Access Code to access and control your Brother machine even when you are away from it.

>> MFC-J3530DW
>> MFC-J3930DW

MFC-J3530DW

1. Press [Settings] > [All Settings] > [Fax] > [Remote Access].
2. Enter a three-digit code using the numbers [0] through [9], [*], or [#] using the dial pad (The preset '*' cannot be changed).

   Press [OK].

- DO NOT use the same code used for your Remote Activation Code (*51) or Remote Deactivation Code (#51).
- To delete your code, press and hold to restore the inactive setting (- - - *), and then press [OK].

3. Press .

MFC-J3930DW

1. Press [Settings] > [All Settings] > [Fax] > [Remote Access].
2. Enter a three-digit code using the numbers [0] through [9], [*], or [#] using the dial pad (The preset '*' cannot be changed).

   Press [OK].

- DO NOT use the same code used for your Remote Activation Code (*51) or Remote Deactivation Code (#51).
- To delete your code, press and hold to restore the inactive setting (---*), and then press [OK].

3. Press .

Related Information

- Remote Fax Retrieval
- Use Your Remote Access Code
- Operation from External and Extension Telephones
- Use the Remote Codes

Use Your Remote Access Code

1. When away from your Brother machine, dial your fax number from a touch-tone telephone or fax machine.
2. When your machine answers, immediately enter your three-digit Remote Access Code, followed by *.
3. Your Brother machine signals if it has received faxes:
   - One long beep - the machine received at least one fax
   - No beeps - the machine has not received a fax
4. When the machine gives two short beeps, enter a command.
   - The machine will hang up if you wait longer than 30 seconds to enter a command.
   - The machine will beep three times if you enter an invalid command.
5. When finished, press 9, and then press 0 to deactivate your machine.
6. Hang up.

Related Information

- Remote Fax Retrieval
- Set a Remote Access Code

Remote Retrieval Commands

Use the Remote Commands in this table to access fax commands and options when you are away from your Brother machine. When you call the machine and enter your remote access code (three digits followed by *), the system will sound two short beeps and you must enter a Remote Command (column 1), followed by one of the options (column 2) for that command.

Remote commands	Options	Operation details
95	**Change the Fax Forwarding, or Fax Storage settings**	
	1 OFF	You can select *Off* after you retrieve or erase all your messages.
	2 Fax Forwarding	One long beep means the change is accepted. If you hear three short beeps, you cannot make a change because something has not been set up (for example, a Fax Forwarding number has not been registered). You can register your Fax Forwarding number by entering 4. After you register the number, Fax Forwarding will work.
	4 Fax Forwarding number	
	6 Fax Storage	
96	**Retrieve a fax**	
	2 Retrieve all faxes	Enter the fax number of a remote fax machine to receive stored fax messages.
	3 Erase faxes from memory	If you hear one long beep, fax messages have been erased from memory.
97	**Check the receiving status**	
	1 Fax	Check whether your machine has received any faxes. If yes, you will hear one long beep. If not, you will hear three short beeps.
98	**Change the Receive Mode**	
	1 External TAD	One long beep means the change has been accepted.
	2 Fax/Tel	
	3 Fax Auto	
90	**Exit**	Press **9 0** to stop remote retrieval. Wait for the long beep, then hang up.

Related Information

- Remote Fax Retrieval
- Change the Fax Forwarding Number
- Store Incoming Faxes in the Machine's Memory
- Forward Faxes Remotely
- Choose the Correct Receive Mode

Forward Faxes Remotely

Call your Brother machine from any touch-tone telephone or fax machine to forward incoming faxes to another machine.

- You must turn on Fax Storage , or Fax Preview before you use this feature.

1. Dial your fax number.
2. When your machine answers, enter your Remote Access Code (three digits followed by *). If you hear one long beep, you have messages.
3. When you hear two short beeps, press 9 6 2.
4. Wait for the long beep, and then use the dial pad to enter the fax number (up to 20 digits) of the remote fax machine where you want your fax messages sent, followed by # #.

You cannot use * and # as dial numbers but you can press # to insert a pause in the fax number.

5. Hang up after you hear one long beep. Your Brother machine will forward any incoming faxes to the fax number you entered. The other fax machine will then print your fax messages.

Related Information

- Remote Fax Retrieval
- Store Incoming Faxes in the Machine's Memory
- Remote Retrieval Commands

Change the Fax Forwarding Number

1. Dial your fax number.
2. When your machine answers, enter your Remote Access Code (three digits followed by *). If you hear one long beep, you have messages.
3. When you hear two short beeps, press 9 5 4.
4. Wait for the long beep, enter the new number (up to 20 digits) of the remote fax machine you want your fax messages forwarded to using the dial pad, then enter # #.

You cannot use * and # as dial numbers but you can press # to insert a pause in the fax number.

5. Press 9 0 to stop Remote Access when finished.
6. Hang up after you hear one long beep.

Related Information

- Remote Fax Retrieval
- Remote Retrieval Commands

Voice Operations and Fax Numbers

- Voice Operations
- Store Fax Numbers
- Set up Groups for Broadcasting

Voice Operations

- Send Tone Signals
- Pick up a Voice Call in Fax/Tel Receive Mode

Send Tone Signals

If you have a Pulse dialling service, but must send Tone signals (for example, for telephone banking), follow these steps. If you have a Touch Tone service, you will not need this feature to send tone signals.

>> MFC-J3530DW
>> MFC-J3930DW

MFC-J3530DW

1. Press [Fax].

If [Fax Preview] is set to [On], press [Fax] > [Sending Faxes].

2. Press [Hook].
3. Press # on the machine's touchpanel. Any digits dialled after this will send tone signals.

When you are finished with the call, the machine will return to the Pulse dialling service.

MFC-J3930DW

1. Press [Fax].

If [Fax Preview] is set to [On], press [Fax] > [Sending Faxes].

2. Press [Hook].
3. Press # on the machine's touchpanel. Any digits dialled after this will send tone signals.

When you are finished with the call, the machine will return to the Pulse dialling service.

Related Information

- Voice Operations

Pick up a Voice Call in Fax/Tel Receive Mode

When the machine is in Fax/Tel mode, it will use the F/T Ring (pseudo/double-ringing) to alert you to pick up a voice call.

If you are at the machine, lift the external telephone's handset, and then press `[Pickup]` button to answer.

If you are at an extension telephone, lift the handset during the F/T Ring and then press #51 between the pseudo/double rings. If no one is on the line, or if someone wants to send you a fax, send the call back to the machine by pressing *51.

Related Information

- Voice Operations

Store Fax Numbers

- Store Address Book Numbers
- Store Address Book Numbers from Outgoing Calls
- Store Address Book Numbers from Caller ID History
- Change or Delete Address Book Names or Numbers

Store Address Book Numbers

>> MFC-J3530DW
>> MFC-J3930DW

MFC-J3530DW

1. Press [Fax] > [Address Book].
2. Do the following steps:
   a. Press [Edit] > [Add New Address] > [Name].
   b. Enter the name (up to 16 characters) using the touchscreen. Press [OK].
   c. Press [Address 1].
   d. Enter the first fax or telephone number (up to 20 digits) using the touchscreen. Press [OK].

   - Press [Pause] to insert a pause between numbers. You can press [Pause] as many times as needed to increase the length of the pause.
   - Be sure to include the area code when entering a fax or telephone number. Depending on the country, the Caller ID names and history may not be displayed correctly if the area code is not registered with the fax or telephone number.
   - If you downloaded Internet Fax:

     To store an E-mail address to use with Internet Fax or Scan to E-mail server, press and enter the E-mail address and press [OK].

   e. To store the second fax or telephone number, press [Address 2]. Enter the second fax or telephone number (up to 20 digits) using the touchscreen. Press [OK].
   f. Press [OK] to confirm.

   To store another Address Book number, repeat these steps.
3. Press .

MFC-J3930DW

1. Press [Fax] > [Address Book].
2. Do the following steps:
   a. Press [Edit] > [Add New Address] > [Name].
   b. Enter the name (up to 16 characters) using the touchscreen. Press [OK].
   c. Press [Address 1].
   d. Enter the first fax or telephone number (up to 20 digits) using the touchscreen. Press [OK].

   - Press [Pause] to insert a pause between numbers. You can press [Pause] as many times as needed to increase the length of the pause.
   - Be sure to include the area code when entering a fax or telephone number. Depending on the country, the Caller ID names and history may not be displayed correctly if the area code is not registered with the fax or telephone number.
   - If you downloaded Internet Fax:

     To store an E-mail address to use with Internet Fax or Scan to E-mail server, press and enter the E-mail address and press [OK].

   e. To store the second fax or telephone number, press [Address 2]. Enter the second fax or telephone number (up to 20 digits) using the touchscreen. Press [OK].

f. Press [OK] to confirm.

To store another Address Book number, repeat these steps.

3. Press .

Related Information

- Store Fax Numbers
- Set up Groups for Broadcasting

Store Address Book Numbers from Outgoing Calls

You can store Address Book numbers from the Outgoing Call history.

>> MFC-J3530DW
>> MFC-J3930DW

MFC-J3530DW

1. Press [Fax] > [Call History] > [Outgoing Call].
2. Press ▲ or ▼ to display the number you want to store, and then press it.
3. Press [Edit] > [Add to Address Book] > [Name].

To delete the number from the Outgoing Call history list, press [Edit] > [Delete]. Press [Yes] to confirm.

4. Enter the name (up to 16 characters) using the touchscreen. Press [OK].
5. To store the second fax or telephone number, press [Address 2]. Enter the second fax or telephone number (up to 20 digits) using the touchscreen. Press [OK].
6. Press [OK] to confirm the fax or telephone number you want to store.
7. Press .

MFC-J3930DW

1. Press [Fax] > [Call History] > [Outgoing Call].
2. Swipe up or down or press ▲ or ▼ to display the number you want to store, and then press it.
3. Press [Edit] > [Add to Address Book] > [Name].

To delete the number from the Outgoing Call history list, press [Edit] > [Delete]. Press [Yes] to confirm.

4. Enter the name (up to 16 characters) using the touchscreen. Press [OK].
5. To store the second fax or telephone number, press [Address 2]. Enter the second fax or telephone number (up to 20 digits) using the touchscreen. Press [OK].
6. Press [OK] to confirm the fax or telephone number you want to store.
7. Press .

Related Information

- Store Fax Numbers
- Enter Text on Your Brother Machine

Store Address Book Numbers from Caller ID History

If you have a Caller ID subscriber service from your telephone company, you can store Address Book numbers from incoming calls in the Caller ID history.

>> MFC-J3530DW
>> MFC-J3930DW

MFC-J3530DW

1. Press [Fax] > [Call History] > [Caller ID History].
2. Press ▲ or ▼ to display the name or number you want to store, and then press it.
3. Press [Edit] > [Add to Address Book] > [Name].

To delete the number from the Caller ID history list, press [Edit] > [Delete]. Press [Yes] to confirm.

4. Enter the name (up to 16 characters) using the touchscreen. Press [OK].
5. To store the second fax or telephone number, press [Address 2]. Enter the second fax or telephone number (up to 20 digits) using the touchscreen. Press [OK].
6. Press [OK] to confirm the fax or telephone number you want to store.
7. Press .

MFC-J3930DW

1. Press [Fax] > [Call History] > [Caller ID History].
2. Swipe up or down or press ▲ or ▼ to display the name or number you want to store, and then press it.
3. Press [Edit] > [Add to Address Book] > [Name].

To delete the number from the Caller ID history list, press [Edit] > [Delete]. Press [Yes] to confirm.

4. Enter the name (up to 16 characters) using the touchscreen. Press [OK].
5. To store the second fax or telephone number, press [Address 2]. Enter the second fax or telephone number (up to 20 digits) using the touchscreen. Press [OK].
6. Press [OK] to confirm the fax or telephone number you want to store.
7. Press .

Related Information

- Store Fax Numbers
- Caller ID
- Enter Text on Your Brother Machine

Change or Delete Address Book Names or Numbers

>> MFC-J3530DW
>> MFC-J3930DW

MFC-J3530DW

1. Press [Fax] > [Address Book] > [Edit].
2. Do one of the following:
   - Press [Change] to edit the names or fax or telephone numbers.

     Press ▲ or ▼ to display the number you want to change, and then press it.
     - To change the name, press [Name]. Enter the new name (up to 16 characters) using the touchscreen. Press [OK].
     - To change the first fax or telephone number, press [Address 1]. Enter the new fax or telephone number (up to 20 digits) using the touchscreen. Press [OK].
     - To change the second fax or telephone number, press [Address 2]. Enter the new fax or telephone number (up to 20 digits) using the touchscreen. Press [OK].

     Press [OK] to finish.

     To change a character, press ◀ or ▶ to position the cursor to highlight the character you want to change, and then press ⌫. Enter the new character.
   - To delete numbers, press ▲ or ▼ to display [Delete], and then press it.
     - Select the fax or telephone numbers you want to delete by pressing them to display a red check mark, and then press [OK].
3. Press .

MFC-J3930DW

1. Press [Fax] > [Address Book] > [Edit].
2. Do one of the following:
   - Press [Change] to edit the names or fax or telephone numbers.

     Swipe up or down or press ▲ or ▼ to display the number you want to change, and then press it.
     - To change the name, press [Name]. Enter the new name (up to 16 characters) using the touchscreen. Press [OK].
     - To change the first fax or telephone number, press [Address 1]. Enter the new fax or telephone number (up to 20 digits) using the touchscreen. Press [OK].
     - To change the second fax or telephone number, press [Address 2]. Enter the new fax or telephone number (up to 20 digits) using the touchscreen. Press [OK].

     Press [OK] to finish.

     To change a character, press ◀ or ▶ to position the cursor to highlight the character you want to change, and then press ⌫. Enter the new character.
   - To delete numbers, press [Delete].
     - Select the fax or telephone numbers you want to delete by pressing them to display a red check mark, and then press [OK].
3. Press .

Related Information

- Store Fax Numbers

Set up Groups for Broadcasting

A Group, which can be stored in the Address Book, allows you to send the same fax message to many fax numbers.

>> MFC-J3530DW
>> MFC-J3930DW

MFC-J3530DW

First, you must store each fax number in the Address Book. Then you can include them as numbers in the Group. Each Group uses up an Address Book number. You can store up to six Groups, or you can assign up to 198 numbers to a large Group.

1. Press [Fax] > [Address Book].
2. Do the following steps:
   a. Press [Edit] > [Setup Groups] > [Name].
   b. Enter the Group name (up to 16 characters) using the touchscreen. Press [OK].
   c. Press [Add/Delete].
   d. Add Address Book numbers to the Group by pressing them to display a red checkmark. Press [OK].
   e. Read and confirm the displayed list of names and numbers you have selected, and then press [OK] to save your Group.

   To store another Group for broadcasting, repeat these steps.
3. Press .

MFC-J3930DW

First, you must store each fax number in the Address Book. Then you can include them as numbers in the Group. Each Group uses up an Address Book number. You can store up to six Groups, or you can assign up to 198 numbers to a large Group.

1. Press [Fax] > [Address Book].
2. Do the following steps:
   a. Press [Edit] > [Setup Groups] > [Name].
   b. Enter the Group name (up to 16 characters) using the touchscreen. Press [OK].
   c. Press [Add/Delete].
   d. Add Address Book numbers to the Group by pressing them to display a red checkmark. Press [OK].
   e. Read and confirm the displayed list of names and numbers you have selected, and then press [OK] to save your Group.

   To store another Group for broadcasting, repeat these steps.
3. Press .

Related Information

- Voice Operations and Fax Numbers
- Change a Broadcasting Group Name
- Delete a Broadcasting Group
- Add or Delete a Broadcasting Group Member
- Send the Same Fax to More than One Recipient (Broadcasting)

- Store Address Book Numbers

Change a Broadcasting Group Name

>> MFC-J3530DW
>> MFC-J3930DW

MFC-J3530DW

1. Press [Fax] > [Address Book] > [Edit] > [Change].
2. Press ▲ or ▼ to display the Group you want to change, and then press it.
3. Press [Name].
4. Enter the new Group name (up to 16 characters) using the touchscreen. Press [OK].

How to change the stored name:

To change a character, press ◀ or ▶ to position the cursor to highlight the incorrect character, and then press ⌫.

Enter the new character.

5. Press [OK].
6. Press ⌂.

MFC-J3930DW

1. Press [Fax] > [Address Book] > [Edit] > [Change].
2. Swipe up or down or press ▲ or ▼ to display the Group you want, and then press it.
3. Press [Name].
4. Enter the new Group name (up to 16 characters) using the touchscreen. Press [OK].

How to change the stored name:

To change a character, press ◀ or ▶ to position the cursor to highlight the incorrect character, and then press ⌫.

Enter the new character.

5. Press [OK].
6. Press ⌂.

Related Information

- Set up Groups for Broadcasting
- Enter Text on Your Brother Machine

Delete a Broadcasting Group

>> MFC-J3530DW
>> MFC-J3930DW

MFC-J3530DW

1. Press [Fax] > [Address Book] > [Edit] > [Delete].
2. Press ▲ or ▼ to display the Group you want to delete, and then press it.
3. Press [OK].
4. Press .

MFC-J3930DW

1. Press [Fax] > [Address Book] > [Edit] > [Delete].
2. Swipe up or down or press ▲ or ▼ to display the Group you want, and then press it.
3. Press [OK].
4. Press .

Related Information

- Set up Groups for Broadcasting

Add or Delete a Broadcasting Group Member

>> MFC-J3530DW
>> MFC-J3930DW

MFC-J3530DW

1. Press [Fax] > [Address Book] > [Edit] > [Change].
2. Press ▲ or ▼ to display the Group you want to change, and then press it.
3. Press ▲ or ▼ to display [Add/Delete], and then press it.
4. Press ▲ or ▼ to display the number you want to add or delete.
5. Do the following for each number you want to change:
   - To add a number to the Group, press the check box of the number to add a check mark.
   - To delete a number from the Group, press the check box of the number to remove the check mark.
6. Press [OK].
7. Press [OK].
8. Press .

MFC-J3930DW

1. Press [Fax] > [Address Book] > [Edit] > [Change].
2. Swipe up or down or press ▲ or ▼ to display the Group you want, and then press it.
3. Swipe up or down or press ▲ or ▼ to display the [Add/Delete] option, and then press it.
4. Swipe up or down or press ▲ or ▼ to display the number you want to add or delete.
5. Do the following for each number you want to change:
   - To add a number to the Group, press the check box of the number to add a check mark.
   - To delete a number from the Group, press the check box of the number to remove the check mark.
6. Press [OK].
7. Press [OK].
8. Press .

Related Information

- Set up Groups for Broadcasting

Telephone Services and External Devices

- Phone Line Services
- Caller ID
- Voice Over Internet Protocol (VoIP/Telephone Line Interference)
- External TAD (Telephone Answering Device)
- External and Extension Telephones

Phone Line Services

Your machine supports the Caller ID subscriber telephone service that some telephone companies offer.

Features like Voice Mail, Call Waiting, Call Waiting/Caller ID, answering services, alarm systems or other custom features on one phone line may create problems with the operation of your machine.

Do you have Voice Mail?

If you have Voice Mail on the telephone line that you will install your new machine on, there is a strong possibility that Voice Mail and the machine will conflict with each other while receiving incoming calls.

Related Information

- Telephone Services and External Devices

Caller ID

The caller ID feature of this machine lets you use the caller ID subscriber service offered by certain telephone companies.

The Caller ID is a telephone service that allows the subscriber to see a display of the caller's phone number as the telephone rings. It is a fast way to screen your calls. You can respond quickly to calls you missed, because caller IDs are received and stored in your fax machine memory. Besides the standard Caller ID feature, you can also select a single caller's phone number and call back.

- This feature is not available in certain area.
- To get the Caller ID service, you have to apply for it at your local telephone company.
- FSK and DTMF are the two modes for displaying your calls. Please ask your local telephone company for whether your mode is FSK or DTMF. If your local telephone company uses DTMF mode, please switch your mode.
- Contact your local telephone company or Brother dealer in the case that the feature does not work normally. Caller ID feature is not available in the following situation:
  - You have not applied for it at your local telephone company.
  - The fax machine is connected to an internal switchboard or other switch device.
  - Due to the switchboard problems or line problems of local telephone companies, the feature may not work in some areas.

Advantages of Caller ID

For Business

All businesses profit from a quicker response to customer calls.

At Home

Residential customers can protect themselves from unwanted calls.

Caller ID feature

The Caller ID feature of this machine lets you use the Caller ID subscriber service offered by many local phone companies.

You can view the list or select one of these numbers to fax to, add to Address Book, or delete from the history.

After a few rings, the screen displays the telephone number of your caller (or name, if available). Once you answer the call, the Caller ID information disappears from the screen, but the call information remains stored in the Caller ID memory.

- The `[ID Unknown]` message means the call originated outside your Caller ID service area.
- The `[ID Withheld]` message means the caller has intentionally blocked transmission of Caller ID information.

You can print a list of the Caller ID information received by your machine.

- You can print a list of Caller ID information received by your machine.
- Caller ID service varies with different carriers. Call your local phone company to determine the kind of service available in your area.

Related Information

- Telephone Services and External Devices
- Set the Caller ID Type
- Store Address Book Numbers from Caller ID History
- Print a Report
- Error and Maintenance Messages

Set the Caller ID Type

>> MFC-J3530DW
>> MFC-J3930DW

MFC-J3530DW

1. Press [Settings] > [All Settings] > [Fax] > [Miscellaneous] > [Caller ID Type].
2. Press [Auto], [FSK] or [DTMF].
3. Press .

MFC-J3930DW

1. Press [Settings] > [All Settings] > [Fax] > [Miscellaneous] > [Caller ID Type].
2. Press [Auto], [FSK] or [DTMF].
3. Press .

Related Information

- Caller ID

Voice Over Internet Protocol (VoIP/Telephone Line Interference)

VoIP is a type of phone system that uses an Internet connection instead of a traditional telephone line. Telephone providers frequently bundle VoIP together with Internet and cable services.

Your machine may not work with some VoIP systems. If you want to use your machine to send and receive faxes on a VoIP system, make sure one end of your telephone cord is connected to the socket labelled LINE on your machine. The other end of the telephone cord may be connected to a modem, phone adapter, splitter, or other such device.

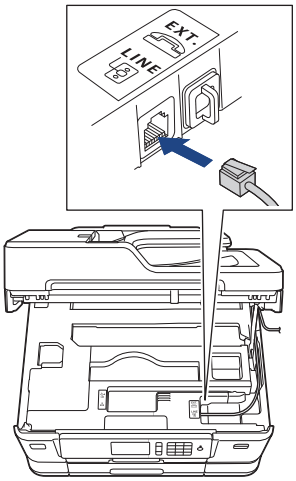

If you have questions about how to connect your machine to the VoIP system, please contact your VoIP provider.

After you have connected your machine to the VoIP system, check for a dial tone. Lift the external telephone's handset and listen for a dial tone. If there is no dial tone, please contact your VoIP provider.

If you are having problems sending or receiving faxes over a VoIP system, we recommend changing the machine's modem speed to the `[Basic(for VoIP)]` setting.

- VoIP (Voice over IP) is a type of phone system that uses an Internet connection, rather than a traditional phone line.
- Brother does not recommend the use of a VoIP line. VoIP limitations in general can cause some functions of the fax machine not to work correctly.

Related Information

- Telephone Services and External Devices
- Telephone Line Interference/VoIP

External TAD (Telephone Answering Device)

You can connect an external Telephone Answering Device (TAD) to the same line as your machine. When the TAD answers a call, your machine will “listen” for the CNG (fax calling) tones sent by a sending fax machine. If it hears them it will take over the call and receive the fax. If it does not hear them, it will let your TAD take a voice message and the LCD will show `[Telephone]`.

The external TAD must answer within two rings (we recommend setting it to two rings). This is because your machine cannot hear the CNG tones until the external TAD has picked up the call. The sending machine will send CNG tones for only eight to ten seconds longer. We do not recommend using the toll saver feature on your external TAD if it needs more than four rings to activate it.

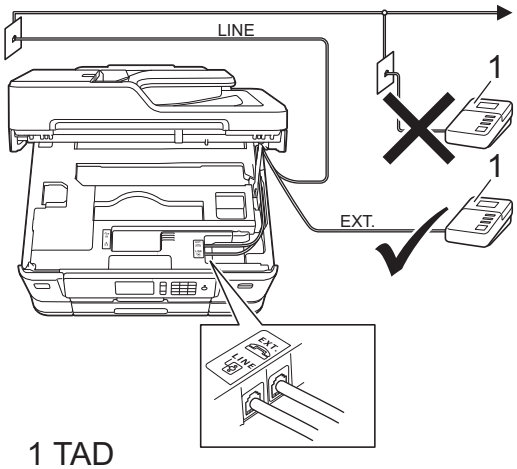

1 TAD

IMPORTANT

DO NOT connect a TAD elsewhere on the same telephone line.

If you have problems receiving faxes, reduce the Ring Delay setting on your external TAD.

Related Information

- Telephone Services and External Devices
- Connect an External TAD
- Record an Outgoing Message (OGM) on the External TAD
- Multi-line Connections (PBX)
- Telephone and Fax problems

Connect an External TAD

1. Set your external TAD to one or two rings.
   The machine's Ring Delay setting does not apply.
2. Record the outgoing message on your external TAD.
3. Set the TAD to answer calls.
4. Set the Receive Mode on your machine to `[External TAD]`.

Related Information

- External TAD (Telephone Answering Device)
- Choose the Correct Receive Mode
- Telephone and Fax problems

Record an Outgoing Message (OGM) on the External TAD

1. Record five seconds of silence at the beginning of your message. This allows your machine time to listen for fax tones.

   We recommend beginning your OGM with an initial five second silence because the machine cannot hear fax tones over a loud voice. You may try leaving out this pause, but if your machine has trouble receiving faxes, then you should re-record the OGM to include it.

2. Limit your speaking to 20 seconds.
3. End your 20-second message by giving your Remote Activation Code for people sending manual faxes. For example: “After the beep, leave a message or press *51 and Start to send a fax.”

Related Information

- External TAD (Telephone Answering Device)

Multi-line Connections (PBX)

We suggest you ask the company that installed your PBX to connect your machine. If you have a multi line system we suggest you ask the installer to connect the unit to the last line on the system. This prevents the machine being activated each time the system receives telephone calls. If all incoming calls will be answered by a switchboard operator we recommend setting the Receive Mode to `[Fax Manual]`.

We cannot guarantee that your machine will operate correctly under all circumstances when connected to a PBX. Any difficulties with sending or receiving faxes should be reported first to the company that handles your PBX.

Related Information

- External TAD (Telephone Answering Device)

External and Extension Telephones

- Connect an External or Extension Telephone
- Operation from External and Extension Telephones
- Use the Remote Codes

Connect an External or Extension Telephone

You can connect a separate telephone to your machine as shown in the diagram below.

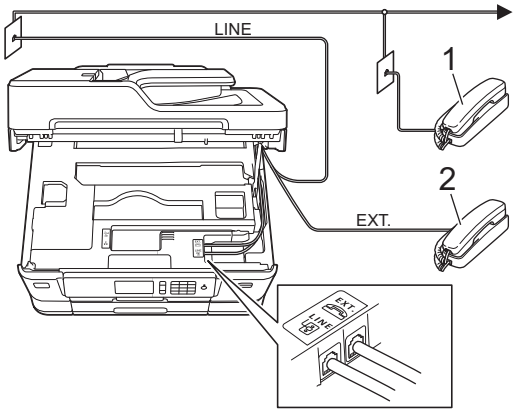

1 Extension telephone
2 External telephone

Related Information

- External and Extension Telephones

Operation from External and Extension Telephones

If you answer a fax call at an extension or an external telephone, you can make your machine take the call by using the Remote Activation Code. When you press the Remote Activation Code ***51**, the machine starts to receive the fax.

If the machine answers a voice call and pseudo/double-rings for you to take over, you can take the call at an extension telephone by pressing the Remote Deactivation Code **#51**.

If you answer a call and no one is on the line:

You should assume that you're receiving a manual fax.

Press ***51** and wait for the chirp or until the LCD shows `[Receiving]`, and then hang up.

You can also use the Fax Detect feature to make your machine automatically take the call.

Related Information

- External and Extension Telephones
- Set the Number of Rings Before the Machine Answers (Ring Delay)
- Set Fax Detect
- Set a Remote Access Code

Use the Remote Codes

Remote Activation Code

If you answer a fax call on an extension or external telephone, you can tell your machine to receive it by pressing the Remote Activation Code ***51**. Wait for the chirping sounds then replace the handset.

If you answer a fax call at the external telephone, you can make the machine receive the fax by pressing the Start button and then selecting the option to receive. (When you set the `[Fax Mode]` option to `[Advanced Mode]`.)

Remote Deactivation Code

If you receive a voice call and the machine is in F/T mode, it will start to sound the F/T ring (pseudo/double-ring) after the initial Ring Delay. If you pick up the call on an extension telephone you can turn the F/T ring off by pressing **#51** (make sure you press this between the rings).

If the machine answers a voice call and pseudo/double-rings for you to take over, you can take the call at the external telephone by pressing `[Pickup]`.

Related Information

- External and Extension Telephones
- Change the Remote Codes
- Set a Remote Access Code
- Set Fax Detect

Change the Remote Codes

The preset Remote Activation Code is ***51**. The preset Remote Deactivation Code is **#51**. If you are always disconnected when accessing your External TAD remotely, try changing the three-digit remote codes using the numbers 0-9, *, #.

>> MFC-J3530DW
>> MFC-J3930DW

MFC-J3530DW

1. Press [Settings] > [All Settings] > [Fax] > [Setup Receive] > [Remote Codes].
2. Do one of the following:
   - To change the Remote Activation Code, press [Act.Code]. Enter the new code, and then press [OK].
   - To change the Remote Deactivation Code, press [Deact.Code]. Enter the new code, and then press [OK].
   - If you do not want to change the Codes, go to the next step.
   - To turn the Remote Codes [Off] (or [On]), press [Remote Codes]. Press [Off] (or [On]).
3. Press .

MFC-J3930DW

1. Press [Settings] > [All Settings] > [Fax] > [Setup Receive] > [Remote Codes].
2. Do one of the following:
   - To change the Remote Activation Code, press [Act.Code]. Enter the new code, and then press [OK].
   - To change the Remote Deactivation Code, press [Deact.Code]. Enter the new code, and then press [OK].
   - If you do not want to change the Codes, go to the next step.
   - To turn the Remote Codes [Off] (or [On]), press [Remote Codes]. Press [Off] (or [On]).
3. Press .

Related Information

- Use the Remote Codes

Fax Reports

- Set the Transmission Verification Report's Style
- Set the Fax Journal's Interval Period
- Print Reports

Set the Transmission Verification Report's Style

You can use the Transmission Verification Report as proof that you sent a fax. This report lists the receiving party's name or fax number, the time and date of transmission, duration of transmission, number of pages sent, and whether or not the transmission was successful.

There are several settings available for the Transmission Verification Report:

Option	Description
On	Prints a report after every fax you send.
On (+Image)	Prints a report after every fax you send. A portion of the fax's first page appears on the report.
Error only	Prints a report if your fax is unsuccessful due to a transmission error.
Error only (+Image)	Prints a report if your fax is unsuccessful due to a transmission error. A portion of the fax's first page appears on the report.
Off	The report will not be printed.

>> MFC-J3530DW
>> MFC-J3930DW

MFC-J3530DW

1. Press [Settings] > [All Settings] > [Fax] > [Report Setting] > [XMIT Report].
2. Press the option you want.

   If you select [On (+Image)] or [Error only (+Image)], the image will not appear on the Transmission Verification Report if Real Time Transmission is set to [On]. The image will not appear on the report when you send a colour fax.
3. Press .

   If the transmission is successful, [OK] appears next to [RESULT] on the Transmission Verification Report. If the transmission is not successful, [ERROR] appears next to [RESULT].

MFC-J3930DW

1. Press [Settings] > [All Settings] > [Fax] > [Report Setting] > [XMIT Report].
2. Press the option you want.

   If you select [On (+Image)] or [Error only (+Image)], the image will not appear on the Transmission Verification Report if Real Time Transmission is set to [On]. The image will not appear on the report when you send a colour fax.
3. Press .

   If the transmission is successful, [OK] appears next to [RESULT] on the Transmission Verification Report. If the transmission is not successful, [ERROR] appears next to [RESULT].

Related Information

- Fax Reports

Set the Fax Journal's Interval Period

You can set the machine to print a Fax Journal at specific intervals (every 50 faxes, 6, 12 or 24 hours, 2 or 7 days).

>> MFC-J3530DW
>> MFC-J3930DW

MFC-J3530DW

1. Press [Settings] > [All Settings] > [Fax] > [Report Setting] > [Journal Period].
2. Press [Journal Period].
3. Press ▲ or ▼ to select an interval.
   - 6, 12, 24 hours, 2 or 7 days

     The machine will print the report at the selected interval and then erase all fax jobs from the Journal's memory. If the memory becomes full with 200 jobs before the time you selected has passed, the machine will print the Journal early and then erase all fax jobs from the memory. If you want an extra report before it is due to print, you can print it without erasing the jobs.
   - Every 50 Faxes

     The machine will print the Journal when the machine has stored 50 fax jobs.
4. If you selected 6, 12, 24 hours, 2 or 7 days, press [Time] and enter the time of day using the touchscreen. Press [OK].
5. If you selected [Every 7 Days], press [Day]. Press ▲ or ▼ to display the [Every Monday], [Every Tuesday], [Every Wednesday], [Every Thursday], [Every Friday], [Every Saturday] or [Every Sunday] option, and then press the first day of the seven-day countdown.
6. Press .

MFC-J3930DW

1. Press [Settings] > [All Settings] > [Fax] > [Report Setting] > [Journal Period].
2. Press [Journal Period].
3. Swipe up or down or press ▲ or ▼ to select an interval.
   - 6, 12, 24 hours, 2 or 7 days

     The machine will print the report at the selected interval and then erase all fax jobs from the Journal's memory. If the memory becomes full with 200 jobs before the time you selected has passed, the machine will print the Journal early and then erase all fax jobs from the memory. If you want an extra report before it is due to print, you can print it without erasing the jobs.
   - Every 50 Faxes

     The machine will print the Journal when the machine has stored 50 fax jobs.
4. If you selected 6, 12, 24 hours, 2 or 7 days, press [Time] and enter the time of day using the touchscreen. Press [OK].
5. If you selected [Every 7 Days], press [Day]. Swipe up or down or press ▲ or ▼ to display the [Every Monday], [Every Tuesday], [Every Wednesday], [Every Thursday], [Every Friday], [Every Saturday] or [Every Sunday] option, and then press the first day of the seven-day countdown.
6. Press .

Related Information

- Fax Reports

- Set the Machine to Power Off Automatically

PC-FAX

- PC-FAX for Windows
- PC-FAX for Mac(Sending only)

PC-FAX for Windows

- PC-FAX Overview (Windows)
- Send a Fax Using PC-FAX (Windows)
- Receive Faxes on Your Computer (Windows)

PC-FAX Overview (Windows)

Reduce paper consumption and save time by using Brother's PC-FAX software to send faxes directly from your machine.

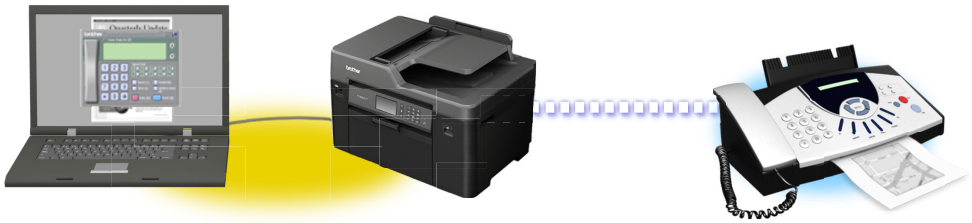

- Configure PC-FAX (Windows)
- Configure your PC-Fax Address Book (Windows)

Configure PC-FAX (Windows)

Before sending faxes using PC-FAX, personalise the send options in each tab of the **PC-FAX Setup** dialog box.

1. Do one of the following:
   - Windows Vista and Windows 7

     Click **(Start)** > **All Programs** > **Brother** > **Brother Utilities**.

     Click the drop-down list and select your model name (if not already selected). Click **PC-FAX** in the left navigation bar, and then click **Setup Sending**.
   - Windows 8 and Windows 10

     Launch (**Brother Utilities**), and then click the drop-down list and select your model name (if not already selected). Click **PC-FAX** in the left navigation bar, and then click **Setup Sending**.

   The **PC-FAX Setup** dialog box appears.

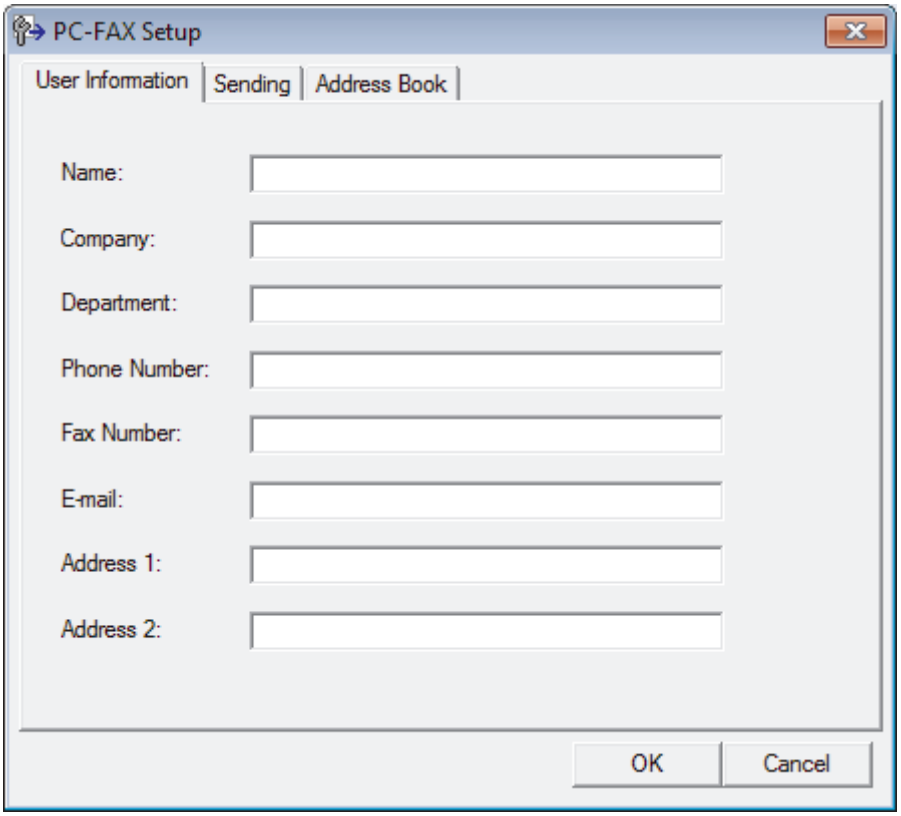

2. Do one of the following:
   - Click the **User Information** tab, and then type your user information in the fields.

     Each Microsoft account can have its own customised **User Information** screen for custom fax headers and cover pages.
   - Click the **Sending** tab, and then type the number needed to access an outside line (if needed) in the **Outside line access** field. Select the **Include header** check box to include the header information.
   - Click the **Address Book** tab, and then select the address book you want to use for PC-FAX from the **Select Address Book** drop-down list.
3. Click **OK**.

Related Information

- PC-FAX Overview (Windows)

Configure your PC-Fax Address Book (Windows)

Add, edit and delete members and groups to personalise your Brother **Address Book**.

- Add a Member to your PC-FAX Address Book (Windows)
- Create a Group in your PC-FAX Address Book (Windows)
- Edit Member or Group Information in your PC-FAX Address Book (Windows)
- Delete a Member or Group in your PC-FAX Address Book (Windows)
- Export your PC-FAX Address Book (Windows)
- Import Information to your PC-FAX Address Book (Windows)

Add a Member to your PC-FAX Address Book (Windows)

Add new people and their fax information to the PC-Fax Address Book if you want to send a fax using Brother PC-Fax software.

1. Do one of the following:
   - Windows Vista and Windows 7

     Click **(Start)** > **All Programs** > **Brother** > **Brother Utilities**.

     Click the drop-down list and select your model name (if not already selected). Click **PC-FAX** in the left navigation bar, and then click **Address Book (Send)**.
   - Windows 8 and Windows 10

     Launch (**Brother Utilities**), and then click the drop-down list and select your model name (if not already selected). Click **PC-FAX** in the left navigation bar, and then click **Address Book (Send)**.

   The **Address Book** dialog box appears.

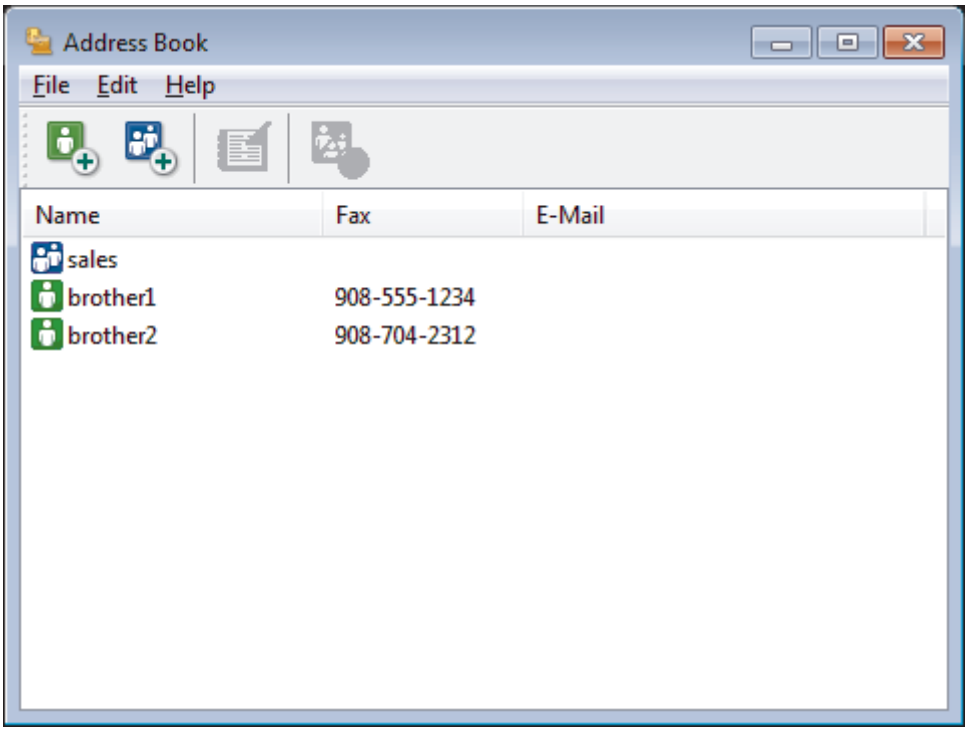

2. Click .

   The **Address Book Member Setup** dialog box appears.

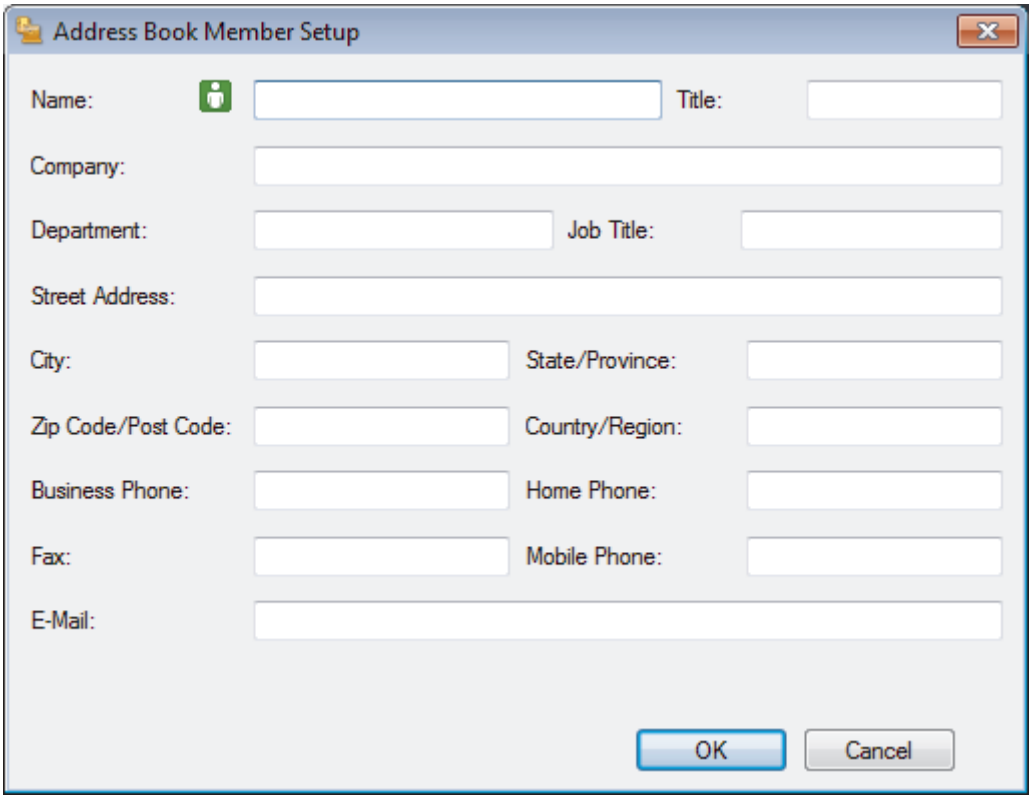

3. Type the member's information in the corresponding fields. Only the **Name** field is required.
4. Click **OK**.

Related Information

- Configure your PC-Fax Address Book (Windows)

Create a Group in your PC-FAX Address Book (Windows)

Create a group to broadcast the same PC-FAX to several recipients at one time.

1. Do one of the following:
   - Windows Vista and Windows 7

     Click **(Start)** > **All Programs** > **Brother** > **Brother Utilities**.

     Click the drop-down list and select your model name (if not already selected). Click **PC-FAX** in the left navigation bar, and then click **Address Book (Send)**.
   - Windows 8 and Windows 10

     Launch (**Brother Utilities**), and then click the drop-down list and select your model name (if not already selected). Click **PC-FAX** in the left navigation bar, and then click **Address Book (Send)**.

   The **Address Book** dialog box appears.

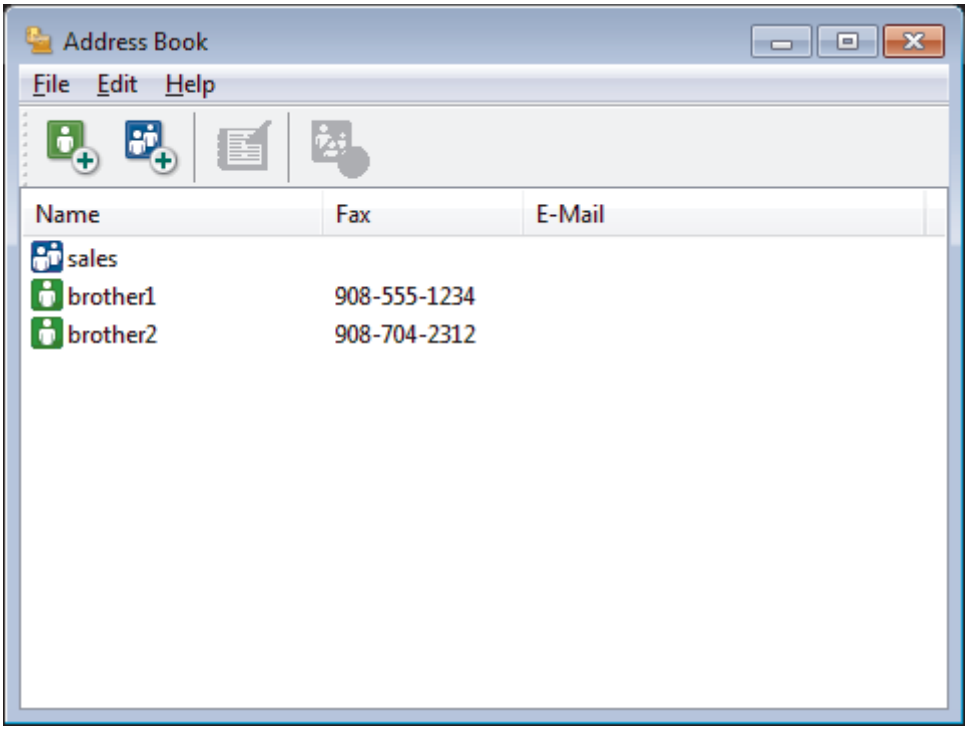

2. Click .

   The **Address Book Group Setup** dialog box appears.

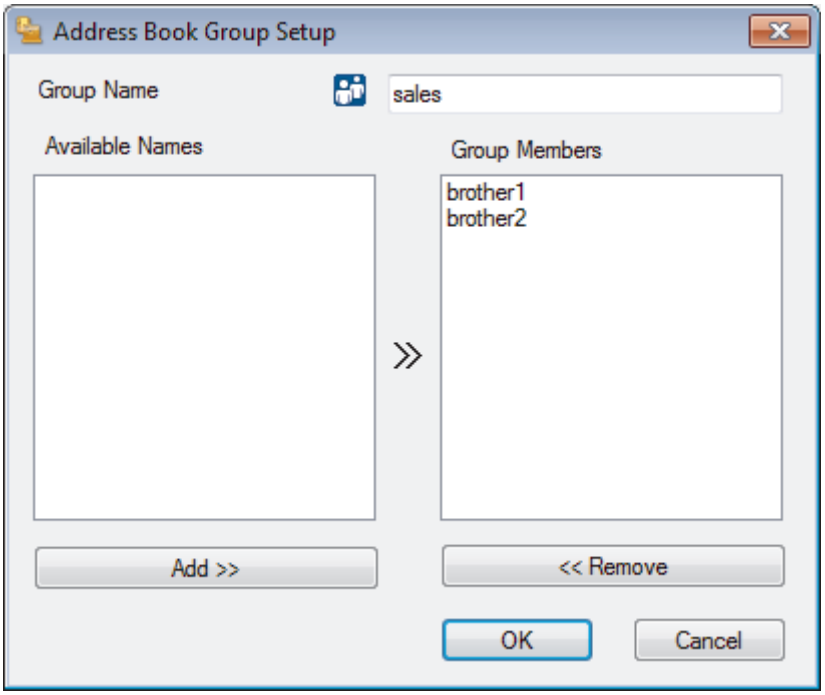

3. Type the name of the new group in the **Group Name** field.
4. In the **Available Names** field, select each name you want to include in the group, and then click **Add >>**. Members added to the group appear in the **Group Members** box.
5. When finished, click **OK**.

Each group can contain up to 50 members.

Related Information

- Configure your PC-Fax Address Book (Windows)

Edit Member or Group Information in your PC-FAX Address Book (Windows)

1. Do one of the following:
   - Windows Vista and Windows 7

     Click **(Start)** > **All Programs** > **Brother** > **Brother Utilities**.

     Click the drop-down list and select your model name (if not already selected). Click **PC-FAX** in the left navigation bar, and then click **Address Book (Send)**.
   - Windows 8 and Windows 10

     Launch (**Brother Utilities**), and then click the drop-down list and select your model name (if not already selected). Click **PC-FAX** in the left navigation bar, and then click **Address Book (Send)**.

   The **Address Book** dialog box appears.

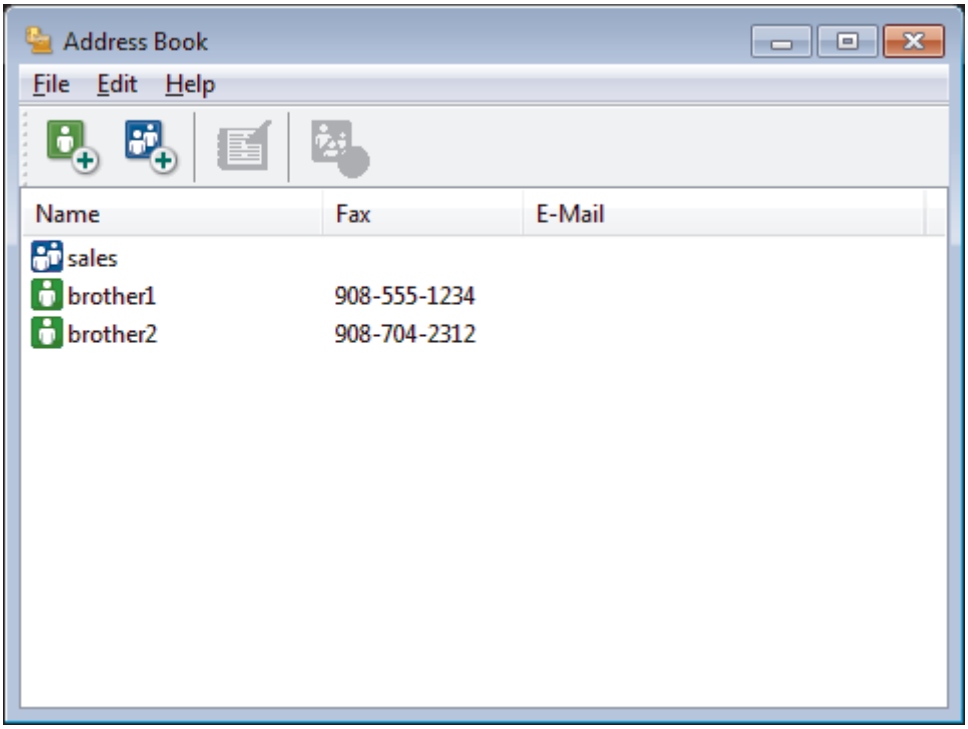

2. Select the member or group you want to edit.
3. Click (**Properties**).
4. Change the member or group information.
5. Click **OK**.

Related Information

- Configure your PC-Fax Address Book (Windows)

Delete a Member or Group in your PC-FAX Address Book (Windows)

1. Do one of the following:
   - Windows Vista and Windows 7

     Click **(Start)** > **All Programs** > **Brother** > **Brother Utilities**.

     Click the drop-down list and select your model name (if not already selected). Click **PC-FAX** in the left navigation bar, and then click **Address Book (Send)**.
   - Windows 8 and Windows 10

     Launch (**Brother Utilities**), and then click the drop-down list and select your model name (if not already selected). Click **PC-FAX** in the left navigation bar, and then click **Address Book (Send)**.

   The **Address Book** dialog box appears.

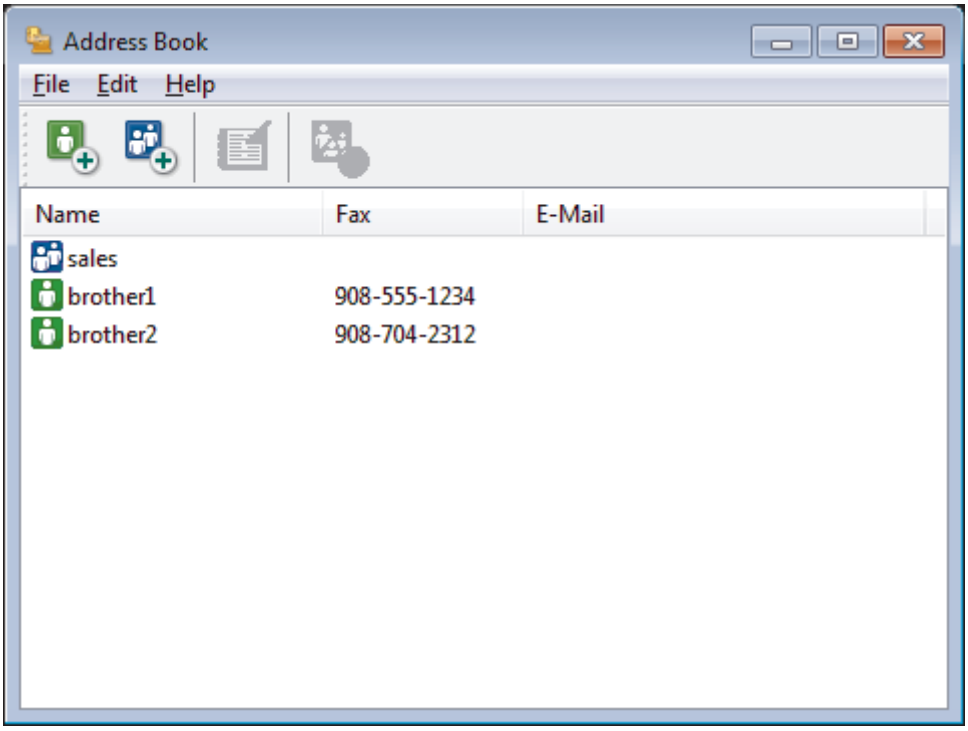

2. Select the member or group you want to delete.
3. Click (**Delete**).
4. When the confirmation dialog box appears, click **OK**.

Related Information

- Configure your PC-Fax Address Book (Windows)

Export your PC-FAX Address Book (Windows)

You can export the Address Book as an ASCII text file (*.csv), a vCard (an electronic business card), or **Remote Setup Dial Data** and save it on your computer.

- You cannot export the group settings when you export the **Address Book** data.

1. Do one of the following:
   - Windows Vista and Windows 7

     Click **(Start)** > **All Programs** > **Brother** > **Brother Utilities**.

     Click the drop-down list and select your model name (if not already selected). Click **PC-FAX** in the left navigation bar, and then click **Address Book (Send)**.
   - Windows 8 and Windows 10

     Launch (**Brother Utilities**), and then click the drop-down list and select your model name (if not already selected). Click **PC-FAX** in the left navigation bar, and then click **Address Book (Send)**.

   The **Address Book** dialog box appears.

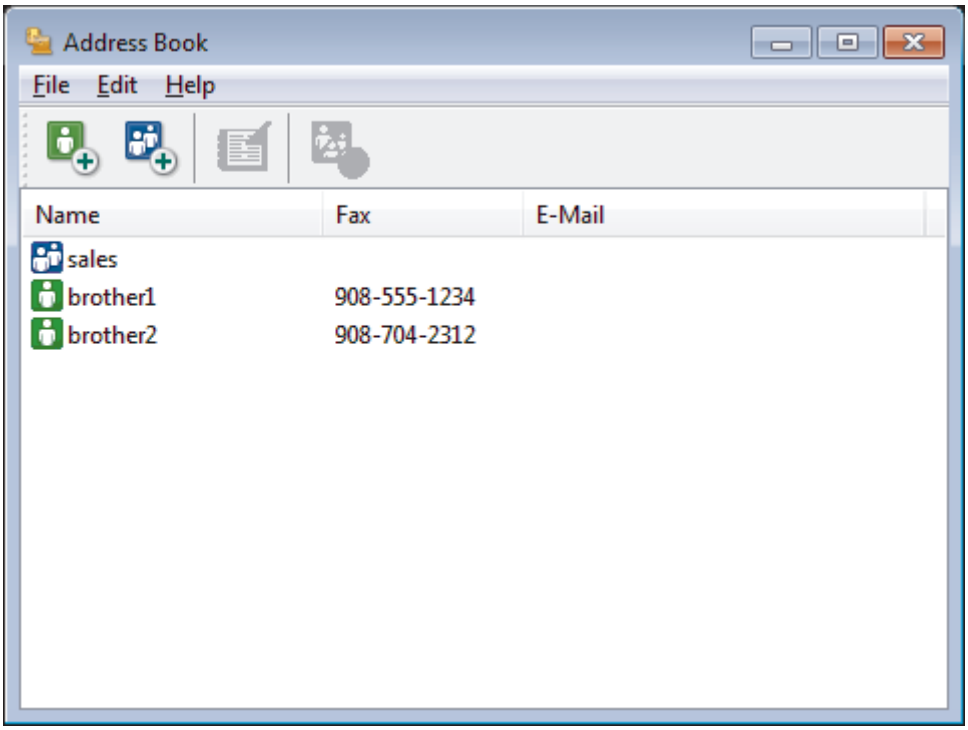

2. Click the **File** menu, and then select **Export**.
3. Select one of the following:
   - **Text**

     The **Select Items** dialog box appears. Go to step 4.
   - **vCard**

     You must select the member you want to export from your address book before selecting this option.

     Browse to the folder where you want to save the vCard, type the vCard name in the **File name** field, and then click **Save**.
   - **Remote Setup Dial Data**

     Browse to the folder where you want to save the data, type the file name in the **File name** field, and then click **Save**.
4. In the **Available Items** field, select the data you want to export, and then click **Add >>**.

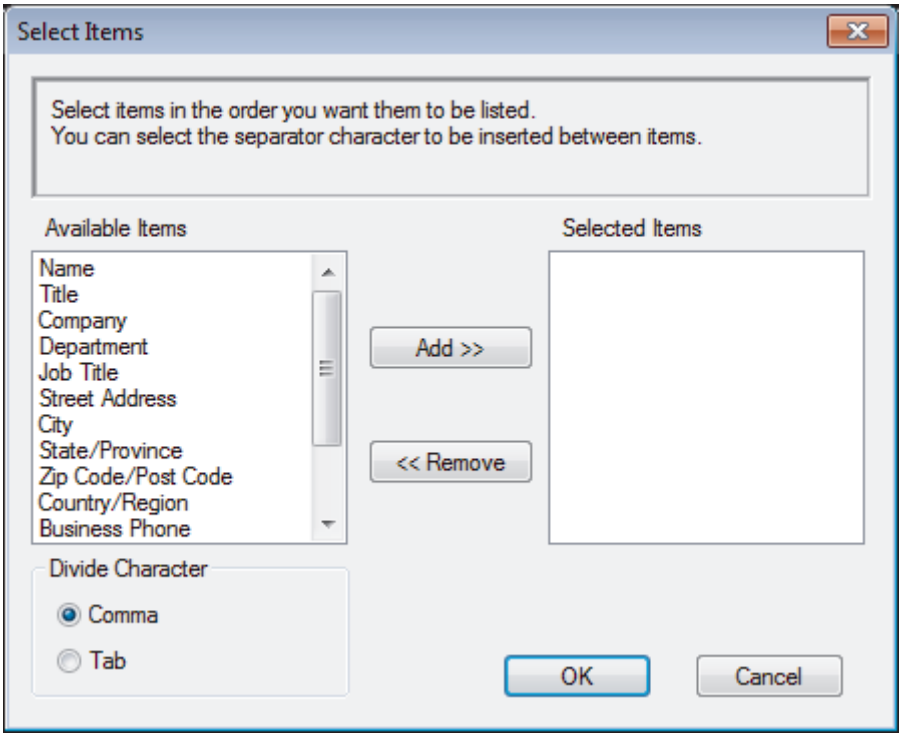

Select and add the items in the order you want them listed.

5. If you are exporting to an ASCII file, under the **Divide Character** section, select the **Tab** or **Comma** option to separate the data fields.
6. Click **OK**.
7. Browse to the folder on your computer where you want to save the data, type the file name, and then click **Save**.

Related Information

- Configure your PC-Fax Address Book (Windows)

Import Information to your PC-FAX Address Book (Windows)

You can import ASCII text files (*.csv), vCards (electronic business cards), or **Remote Setup Dial Data** into your Address Book.

1. Do one of the following:
   - Windows Vista and Windows 7

     Click **(Start)** > **All Programs** > **Brother** > **Brother Utilities**.

     Click the drop-down list and select your model name (if not already selected). Click **PC-FAX** in the left navigation bar, and then click **Address Book (Send)**.
   - Windows 8 and Windows 10

     Launch (**Brother Utilities**), and then click the drop-down list and select your model name (if not already selected). Click **PC-FAX** in the left navigation bar, and then click **Address Book (Send)**.

   The **Address Book** dialog box appears.

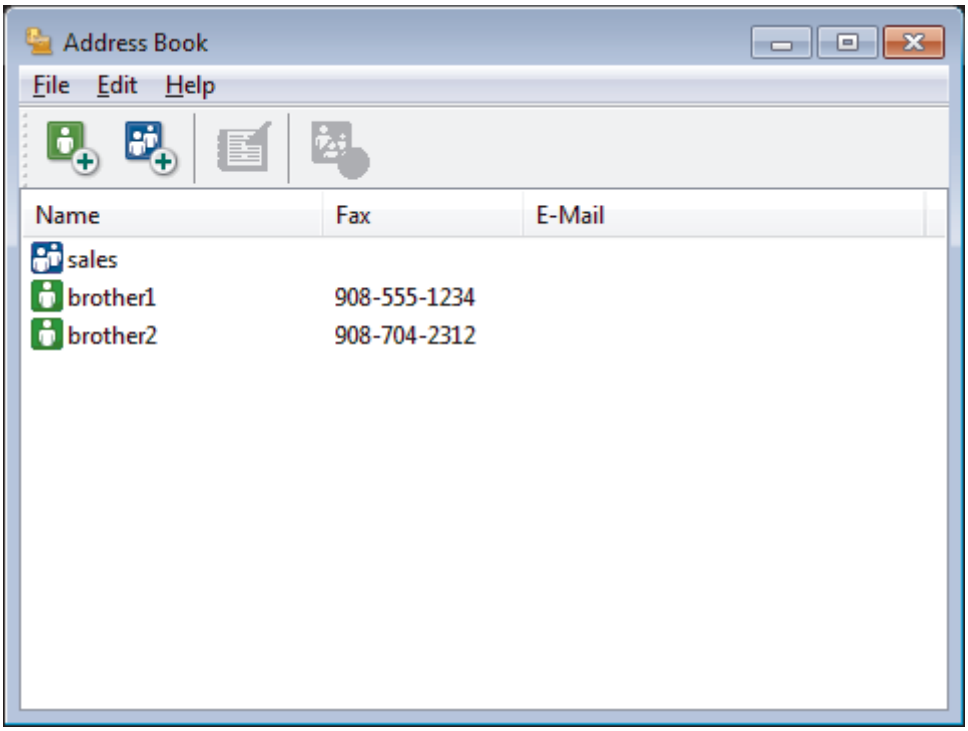

2. Click the **File** menu, and then select **Import**.
3. Select one of the following:
   - **Text**

     The **Select Items** dialog box appears. Go to step 4.
   - **vCard**

     Go to step 7.
   - **Remote Setup Dial Data**

     Go to step 7.
4. In the **Available Items** field, select the data you want to import, and then click **Add >>**.

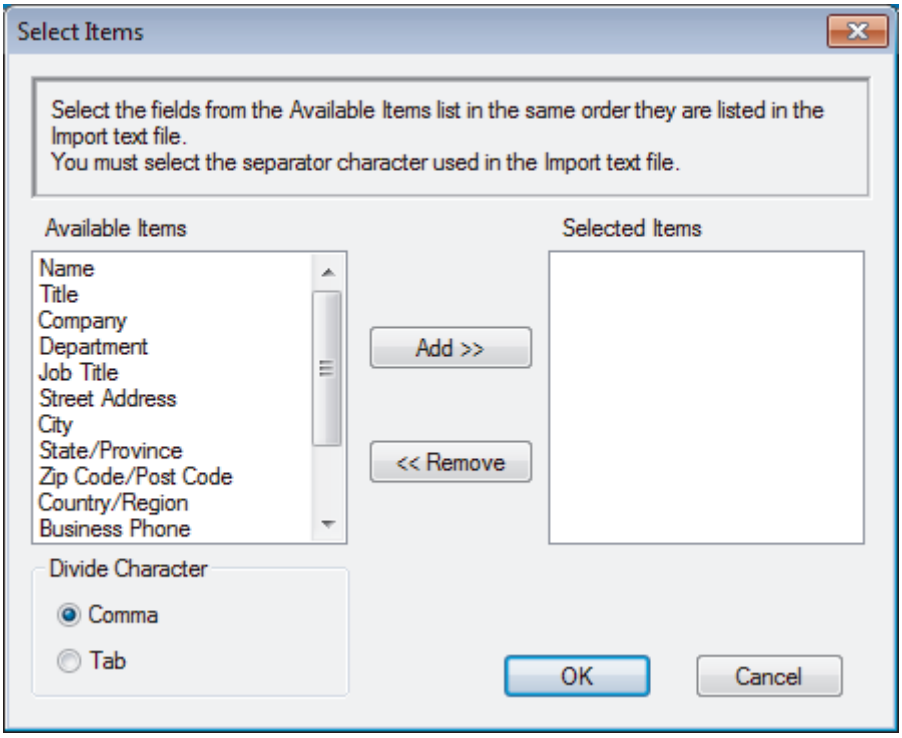

You must select and add fields from the **Available Items** list in the same order they are listed in the import text file.

5. If you are importing an ASCII file, under the **Divide Character** section, select the **Tab** or **Comma** option to separate the data fields.
6. Click **OK**.
7. Browse to the folder where you want to import the data, type the file name, and then click **Open**.

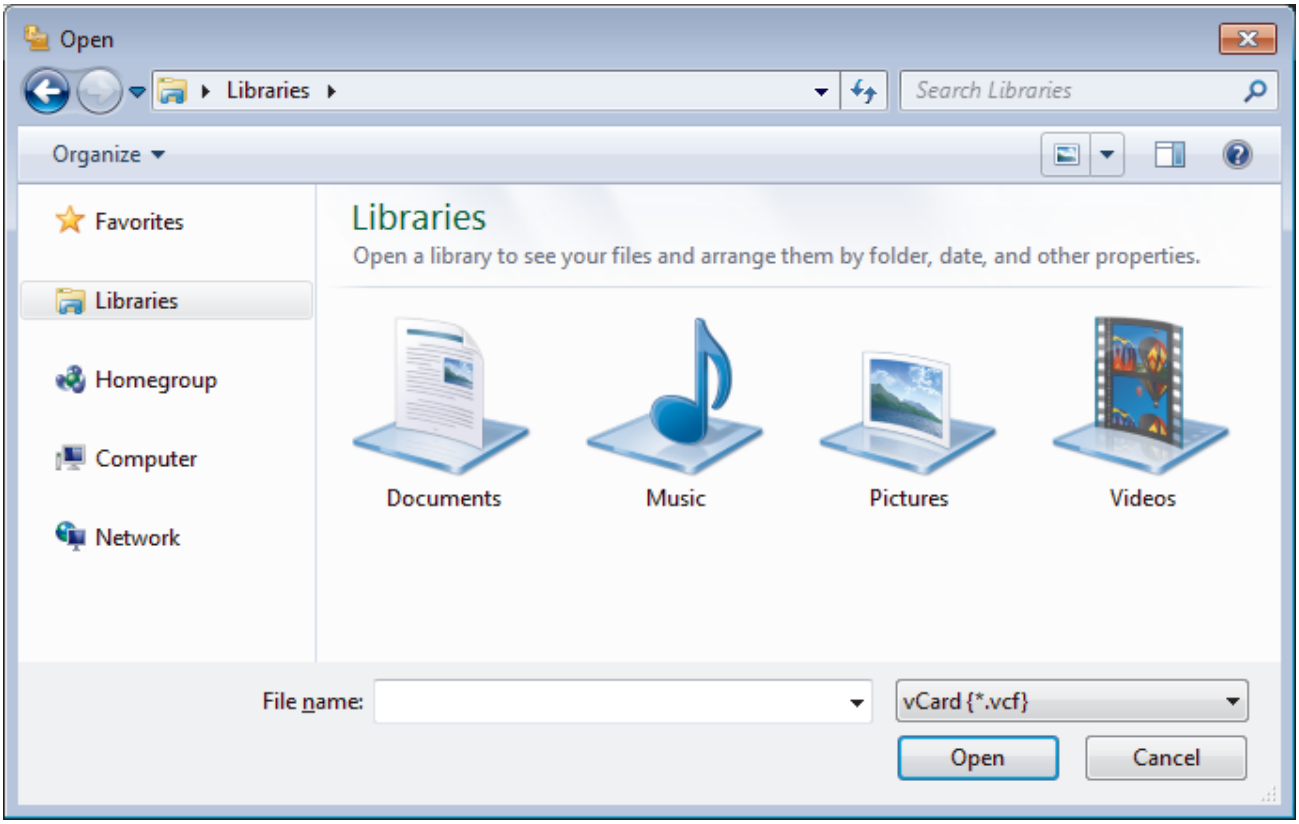

Related Information

- Configure your PC-Fax Address Book (Windows)

Send a Fax Using PC-FAX (Windows)

PC-FAX supports only monochrome faxes. A monochrome fax will be sent even if the original data is colour and the receiving fax machine supports colour faxes.

1. Create a file in any application on your computer.
2. Select the print command in your application.
3. Select **Brother PC-FAX** as your printer, and then complete your print operation.

   The **Brother PC-FAX** dialog box appears.

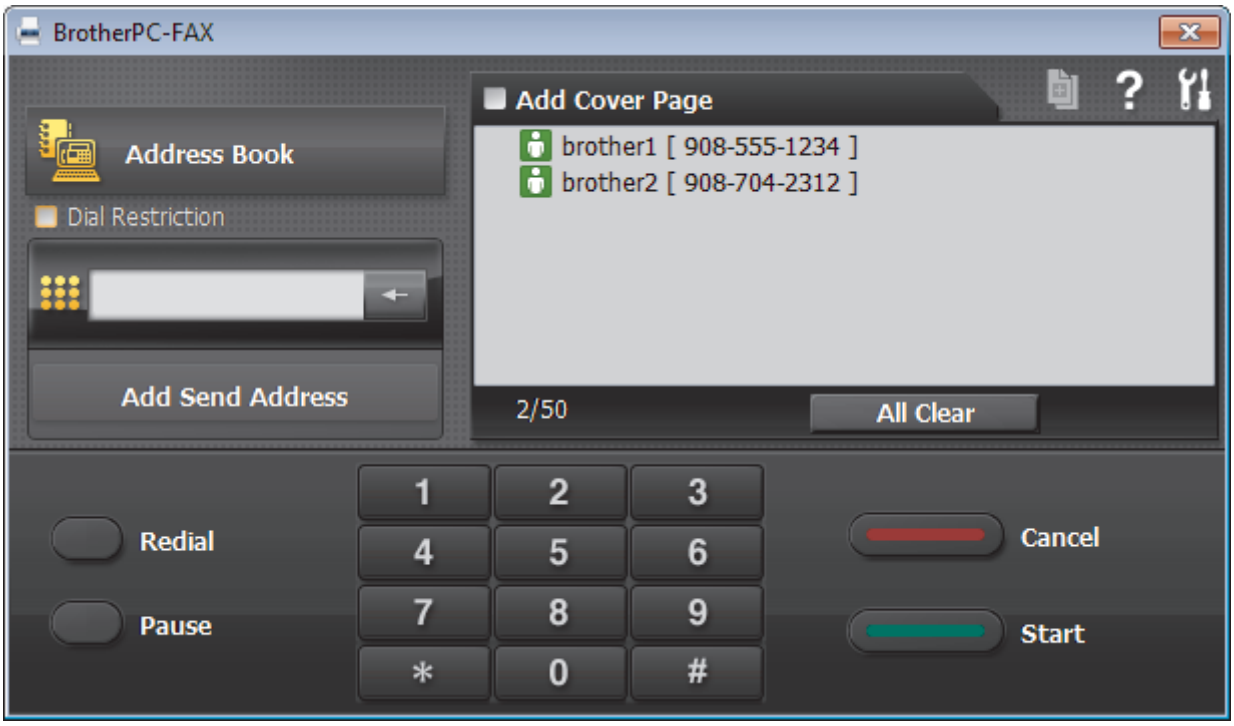

4. Type a fax number using one of the following methods:
   - Click the numbers on the dial pad to type the number, and then click **Add Send Address**.

   If you select the **Dial Restriction** check box, a confirmation dialog box will appear for you to re-type the fax number using the keyboard. This feature helps to prevent transmissions to the wrong destination.

   - Click the **Address Book** button, and then select a member or group from the Address Book.

   If you make a mistake, click **All Clear** to delete all entries.

5. To include a cover page, select the **Add Cover Page** check box. You can also click to create or edit a cover page.
6. Click **Start** to send the fax.

   - To cancel the fax, click **Cancel**.
   - To redial a number, click **Redial** to show the last five fax numbers, select a number, and then click **Start**.

Related Information

- PC-FAX for Windows

Receive Faxes on Your Computer (Windows)

Use Brother's PC-FAX software to receive faxes on your computer, screen them and print only those faxes you want.

- Receive Faxes Using PC-FAX Receive (Windows)

Receive Faxes Using PC-FAX Receive (Windows)

Brother's PC-FAX Receive software lets you view and store faxes on your computer. It is automatically installed when you install the Brother software and drivers and works on locally or network-connected machines.

- PC-FAX Receive supports only monochrome faxes. When you receive a colour fax, your machine prints the colour fax at your machine but does not send the fax to your computer.

When you turn off your computer, your machine will continue to receive and store faxes in your Brother machine's memory. The machine's LCD will display the number of stored faxes received. When you start this application, the software will transfer all received faxes to your computer at once. You can enable the Backup Print option if you want the machine to print a copy of the fax before the fax is sent to your computer, or before the computer is switched off. You can configure the Backup Print settings from your Brother machine.

Related Information

- Receive Faxes on Your Computer (Windows)
- Run Brother's PC-FAX Receive on Your Computer (Windows)
- View Received PC-FAX Messages (Windows)
- Use PC-Fax Receive to Transfer Received Faxes to Your Computer (Windows only)

Run Brother's PC-FAX Receive on Your Computer (Windows)

We recommend selecting the **Start PC-FAX Receive on computer startup** check box so that the software runs automatically and can transfer any faxes upon computer startup.

1. Do one of the following:
   - Windows Vista and Windows 7

     Click **(Start)** > **All Programs** > **Brother** > **Brother Utilities**.

     Click the drop-down list and select your model name (if not already selected). Click **PC-FAX** in the left navigation bar, and then click **Receive**.
   - Windows 8 and Windows 10

     Launch (**Brother Utilities**), and then click the drop-down list and select your model name (if not already selected). Click **PC-FAX** in the left navigation bar, and then click **Receive**.
2. Confirm the message and click **Yes**.

   The **PC-FAX Receive** window appears. The (**PC-FAX Receive**) icon also appears in your computer task tray.

Related Information

- Receive Faxes Using PC-FAX Receive (Windows)
- Set Up Your Computer for PC-FAX Receiving (Windows)
- Add Your Brother Machine to PC-FAX Receiving (Windows)

Set Up Your Computer for PC-FAX Receiving (Windows)

1. Double-click the (**PC-FAX Receive**) icon in your computer task tray.

   The **PC-FAX Receive** window appears.
2. Click **Settings**.
3. Configure these options as needed:

   Preferences

   Configure to start PC-FAX Receive automatically when you start Windows.

   Save

   Configure the path to save PC-FAX files and select the received document format.

   Upload to

   Configure the path to the SharePoint server and select the option to upload automatically or manually (available only for Administrators).

   Device

   Select the Brother machine that you want to receive PC-FAX.

   Lock (available only for Administrators)

   Restrict users who do not have administrator privileges from configuring the settings options shown above.

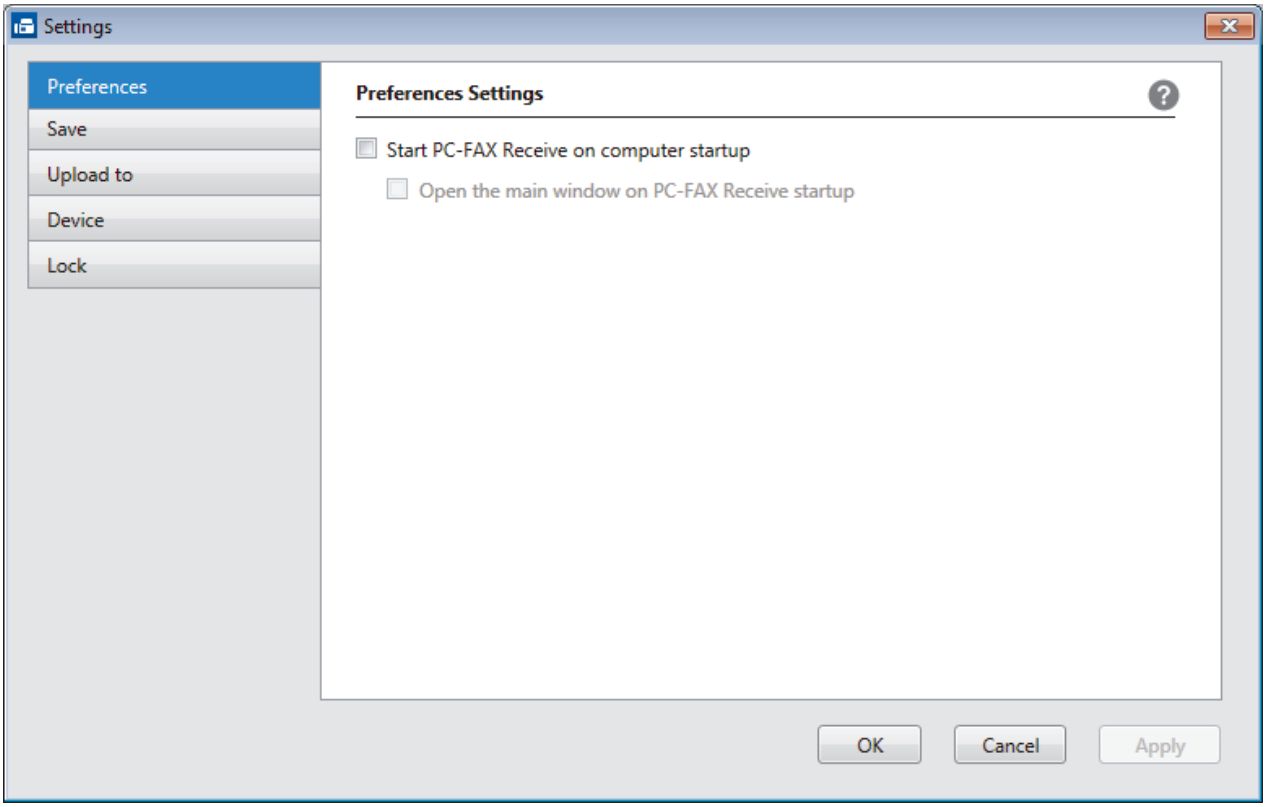

4. Click **OK**.

Related Information

- Run Brother's PC-FAX Receive on Your Computer (Windows)

Add Your Brother Machine to PC-FAX Receiving (Windows)

- If you installed the machine following the instructions for a network user, then the machine should already be configured for your network.

1. Double-click the (**PC-FAX Receive**) icon in your computer task tray.

   The **PC-FAX Receive** window appears.
2. Click **Settings**.
3. Click **Device** > **Add**.

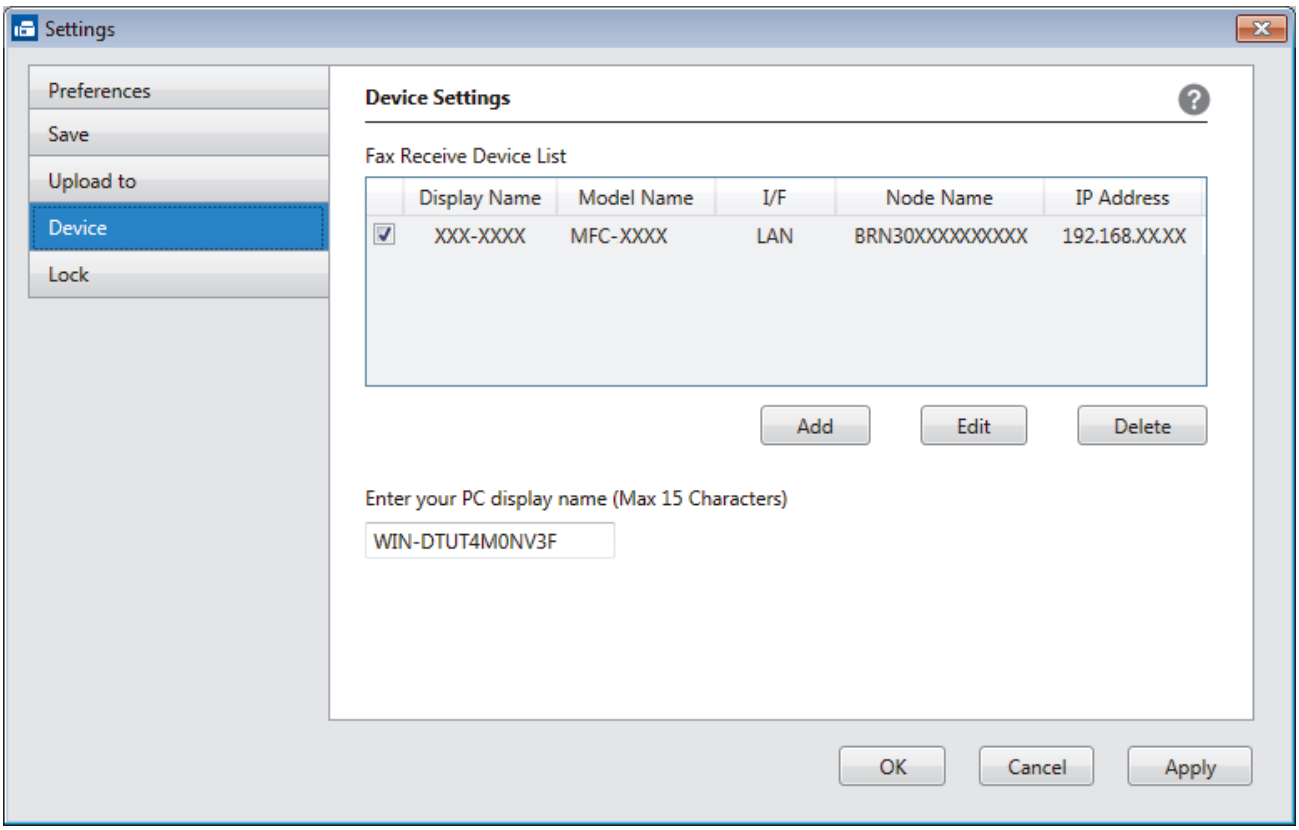

4. Select the appropriate connection method.

   Select your machine from the automatic search results below.

   Connected Brother machines will be displayed. Select a device from the list. Click **OK**.

   Specify your machine by IP address

   Type the machine's IP address in the **IP Address** field, and then click **OK**.

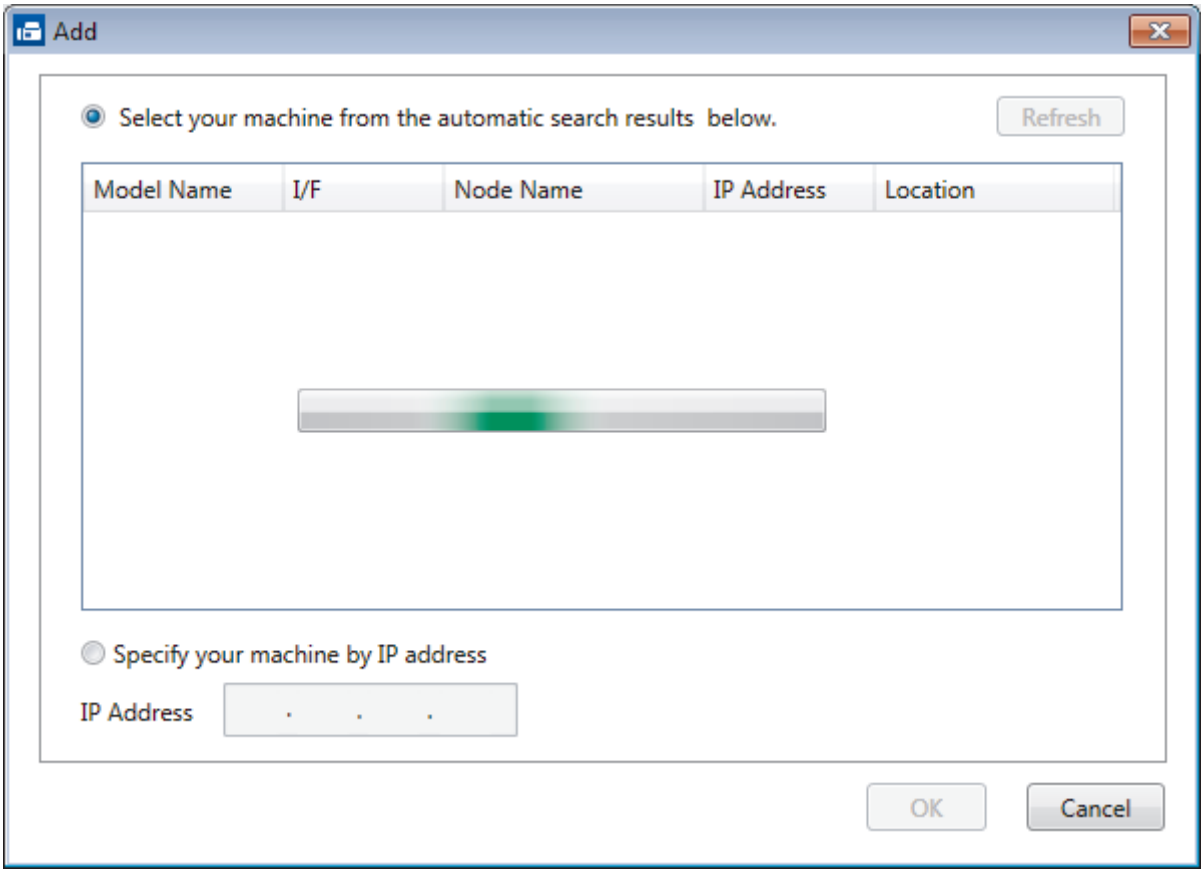

5. To change the computer name that will appear on the machine's LCD, type the new name in the **Enter your PC display name (Max 15 Characters)** field.
6. Click **OK**.

Related Information

- Run Brother's PC-FAX Receive on Your Computer (Windows)

View Received PC-FAX Messages (Windows)

Receiving Status

Icon	Indicated Status
	Standby mode No unread messages
	Receiving messages
	Messages received Unread messages

1. Double-click the (**PC-FAX Receive**) icon in your computer task tray.

   The **PC-FAX Receive** window appears.

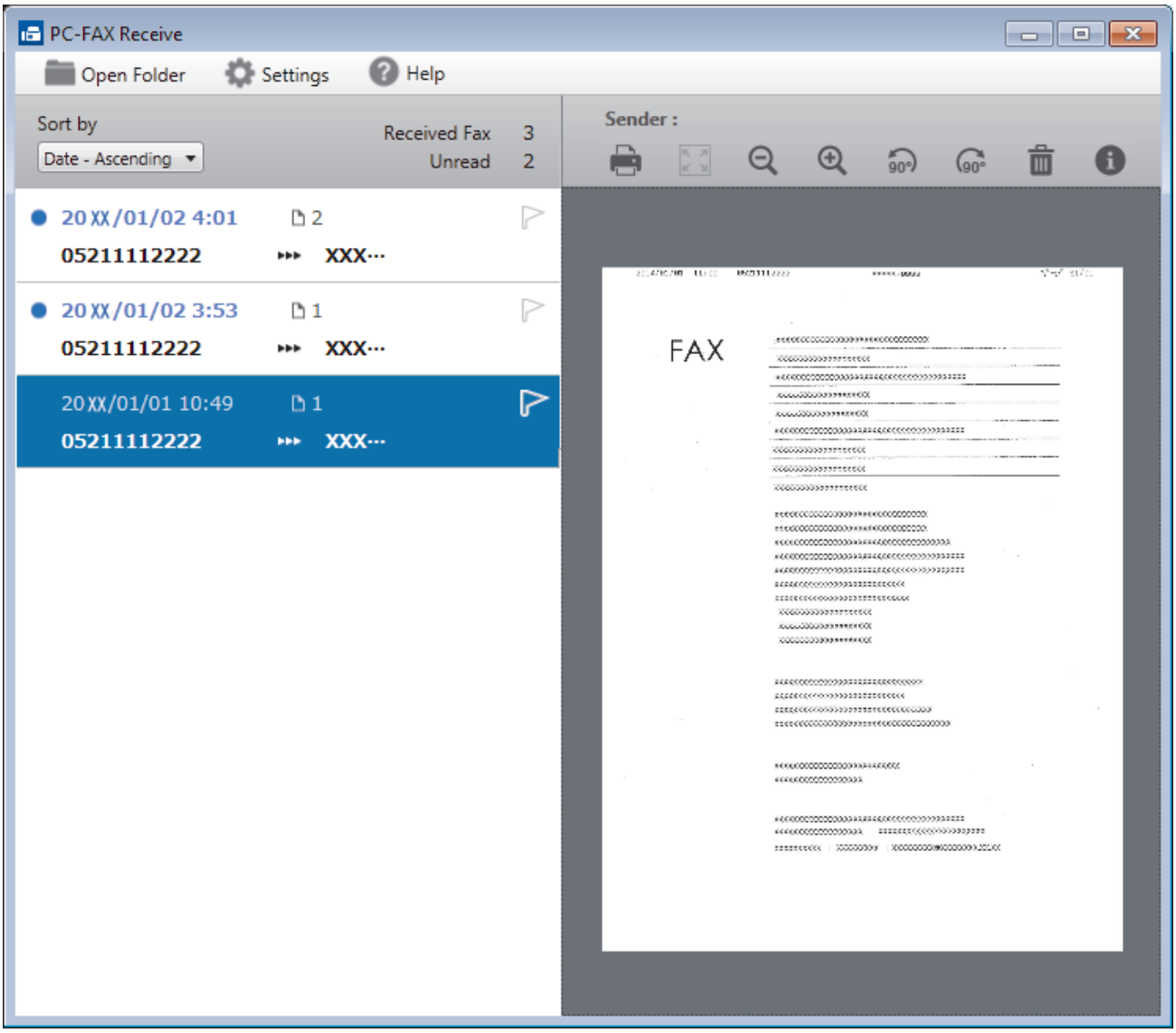

2. Click any faxes in the list to view them.
3. When finished, click in the right top corner of the window to close it.

Even after closing the window, PC-FAX Receive is active and the (**PC-FAX Receive**) icon will remain in your computer task tray. To close PC-FAX Receive, click the icon in the computer task tray and click **Close**.

Related Information

- Receive Faxes Using PC-FAX Receive (Windows)

PC-FAX for Mac(Sending only)

Use Brother's PC-FAX software to send faxes directly from your Mac without printing them. This feature helps reduce your paper consumption and save time.

- Send Faxes from Your Application (Mac)

Send Faxes from Your Application (Mac)

PC-FAX supports only monochrome faxes. A monochrome fax will be sent even if the original data is colour and the receiving fax machine supports colour faxes.

1. Create a document in a Mac application.
2. From an application, such as Apple TextEdit, click the **File** menu, and then select **Print**.
3. Click the application pop-up menu, and then select the **Send Fax** option.

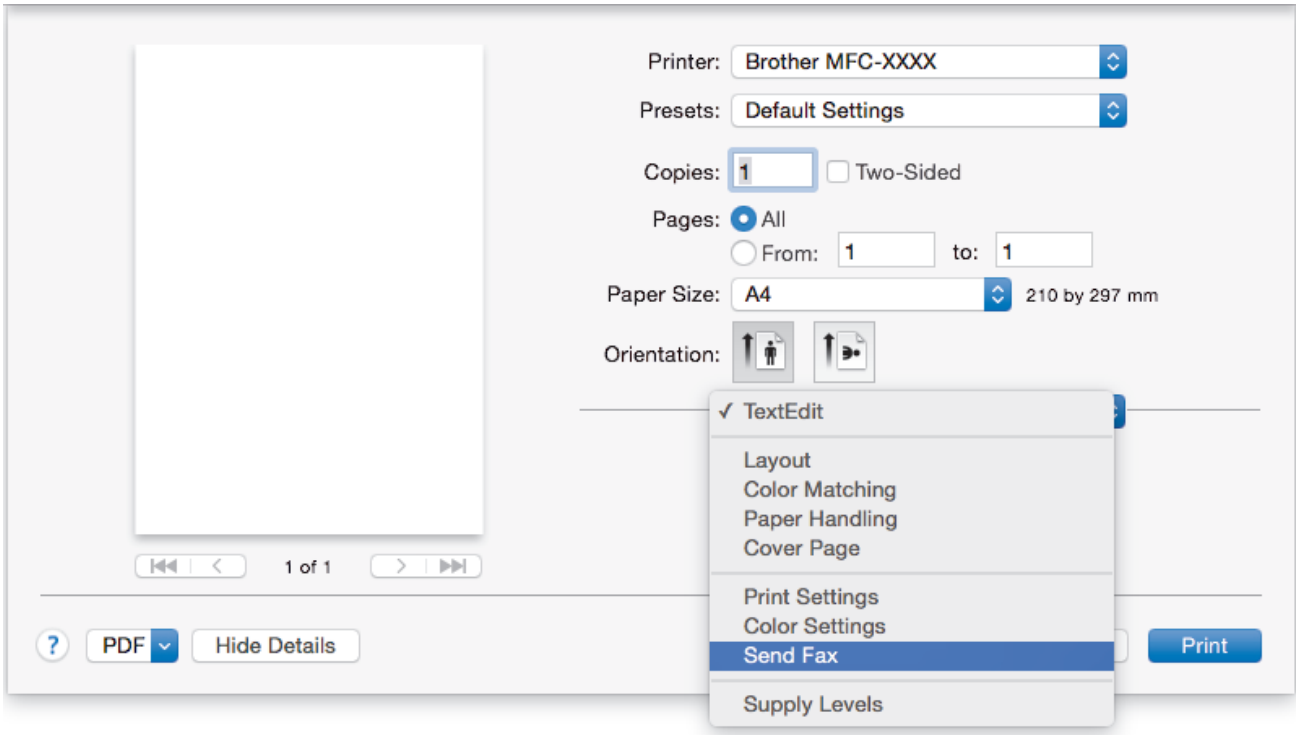

4. Click the **Output** pop-up menu, and then select the **Facsimile** option.

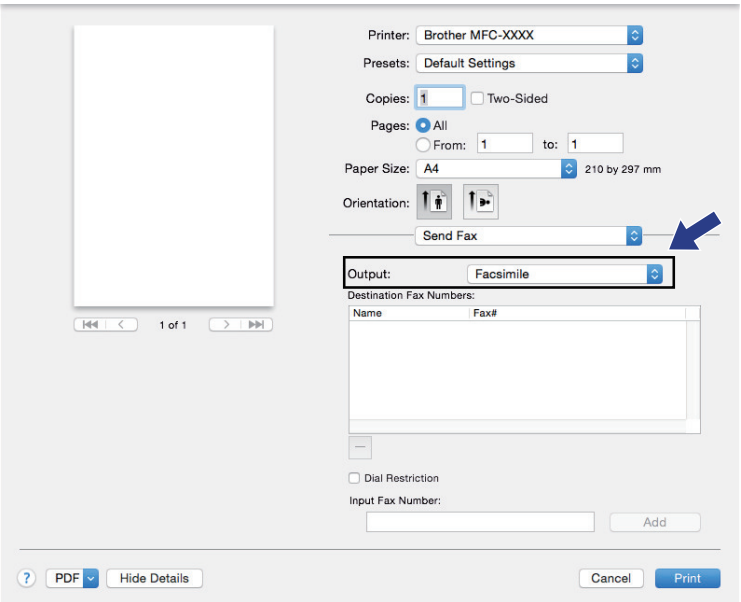

5. Type a fax number in the **Input Fax Number** field, and then click **Add**.
   The fax number is displayed in the **Destination Fax Numbers** field.

To send a fax to more than one number, click the **Add** button after entering the first fax number and type the next fax number. The destination fax numbers will be listed in the **Destination Fax Numbers** field.

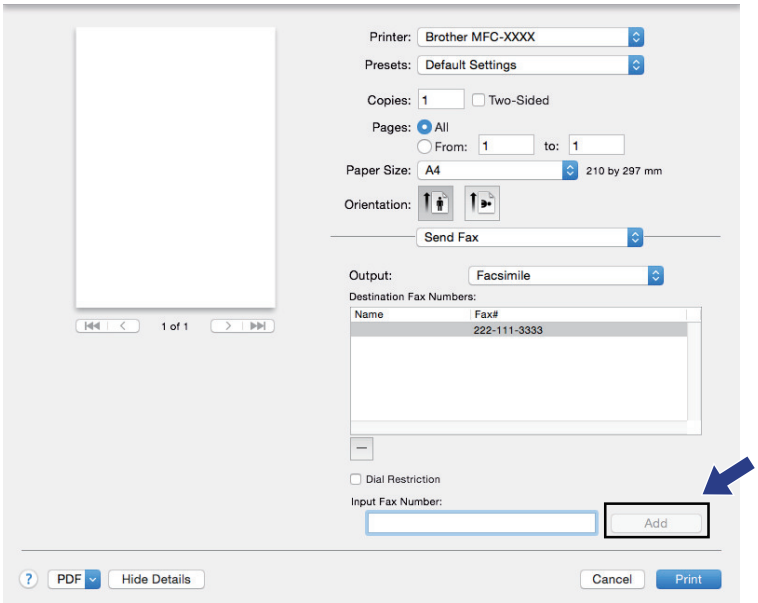

6. Click **Print** to send the fax.

Related Information

- PC-FAX for Mac(Sending only)

Network

- Supported Basic Network Features
- Network Management Software and Utilities
- Additional Methods of Configuring Your Brother Machine for a Wireless Network
- Advanced Network Features
- Technical Information for Advanced Users

Supported Basic Network Features

The print server supports various features depending on the operating system. Use this table to see which network features and connections are supported by each operating system.

Operating Systems	Windows Vista Windows 7 Windows 8 Windows 10	Windows Server 2008/2012/2012 R2	OS X v10.9.5 OS X v10.10.x OS X v10.11.x
Printing	Yes	Yes	Yes
Scanning	Yes		Yes
PC Fax Send (Available only for certain models)	Yes		Yes
PC Fax Receive (Available only for certain models)	Yes		
BRAdmin Light [1]	Yes	Yes	
BRAdmin Professional [2]	Yes	Yes	
Web Based Management	Yes	Yes	Yes
Remote Setup (Available only for certain models)	Yes		Yes
Status Monitor	Yes		Yes
Driver Deployment Wizard	Yes	Yes	
Vertical Pairing (Windows 7, Windows 8 and Windows 10 only)	Yes		

Related Information

- Network

[1] BRAdmin Light is available as a download from your model's page at support.brother.com.

[2] BRAdmin Professional is available as a download from your model's page at support.brother.com.

Network Management Software and Utilities

Configure and change your Brother machine's network settings using a management utility.

- Learn about Network Management Software and Utilities
- Change Machine Settings from Your Computer

Learn about Network Management Software and Utilities

Web Based Management

Web Based Management is a utility that uses a standard web browser to manage your machine using the Hyper Text Transfer Protocol (HTTP) or Hyper Text Transfer Protocol over Secure Socket Layer (HTTPS). Type your machine's IP address into your web browser to access and change your print server settings.

BRAdmin Light (Windows)

BRAdmin Light is a utility for the initial setup of Brother network-connected devices. This utility can search for Brother products on your network, view the status and configure the basic network settings, such as IP address.

Go to your model's **Downloads** page on the Brother Solutions Center at support.brother.com to download BRAdmin Light.

- If using Windows Firewall, or the firewall function of an anti-spyware or antivirus application, temporarily disable them. When you are sure you can print, configure the software settings following the instructions.

BRAdmin Professional (Windows)

BRAdmin Professional is a utility for more advanced management of network-connected Brother devices. This utility can search for Brother products on your network and view the device status from an easy-to-read Windows Explorer-style screen that changes colour to identify the status of each device. You can configure network and device settings, and update device firmware from a Windows computer on your LAN. BRAdmin Professional can also log activity of Brother devices on your network and export the log data.

- Go to your model's **Downloads** page on the Brother Solutions Center at support.brother.com to download the latest version of Brother's BRAdmin Professional utility.
- Node name: The node name appears in the current BRAdmin Professional window. The default node name is "BRNxxxxxxxxxxxx" for a wired network or "BRWxxxxxxxxxxxx" for a wireless network (where "xxxxxxxxxxxx" is your machine's MAC Address / Ethernet address).
- If using Windows Firewall, or the firewall function of an anti-spyware or antivirus application, temporarily disable them. When you are sure you can print, configure the software settings following the instructions.

Remote Setup (Windows and Mac)

Remote Setup is a program for configuring many machine and network settings from either a Windows or a Mac application. When you start this application, the settings on your machine are automatically downloaded to your computer and displayed on your computer screen. If you change the settings, you can upload them directly to the machine.

This utility can be used with either a USB or a network connection.

Related Information

- Network Management Software and Utilities

Additional Methods of Configuring Your Brother Machine for a Wireless Network

To connect your machine to your wireless network, we recommend using the Installation CD-ROM.

- Before Configuring Your Brother Machine for a Wireless Network
- Configure Your Machine for a Wireless Network Using the One Push Method of Wi-Fi Protected Setup™ (WPS)
- Configure Your Machine for a Wireless Network Using the PIN Method of Wi-Fi Protected Setup™ (WPS)
- Configure Your Machine for a Wireless Network When the SSID is Not Broadcast
- Configure Your Machine for an Enterprise Wireless Network
- Use Wi-Fi Direct®

Before Configuring Your Brother Machine for a Wireless Network

Before attempting to configure a wireless network, confirm the following:

- Before configuring wireless settings, you must know your Network name (SSID) and Network Key. If you are using an enterprise wireless network, you must know the User ID and Password.

  If you do not know the security information, please consult the router manufacture, your system administrator, or your Internet provider.

- To achieve optimum results with normal everyday document printing, place the Brother machine as close to the wireless LAN access point/router as possible with minimal obstructions. Large objects and walls between the two devices and interference from other electronic devices can affect the data transfer speed of your documents.

  Due to these factors, wireless may not be the best method of connection for all types of documents and applications. If you are printing large files, such as multi-page documents with mixed text and large graphics, you may want to consider selecting wired Ethernet for faster data transfer (supported models only), or USB for the fastest throughput speed.

- Although the Brother machine can be used in both a wired and wireless network (supported models only), only one connection method can be used at a time. However, a wireless network connection and Wi-Fi Direct connection, or a wired network connection (supported models only) and Wi-Fi Direct connection can be used at the same time.

Related Information

- Additional Methods of Configuring Your Brother Machine for a Wireless Network

Configure Your Machine for a Wireless Network Using the One Push Method of Wi-Fi Protected Setup™ (WPS)

If your wireless access point/router supports WPS (Push Button Configuration), you can use WPS from your machine's control panel menu to configure your wireless network settings.

Routers or access points that support WPS are marked with this symbol:

>> MFC-J3530DW
>> MFC-J3930DW

MFC-J3530DW

1. Press [Settings] > [All Settings] > [Network] > [WLAN] > [WPS].
2. When [Enable WLAN?] appears, press [Yes].

   The wireless setup wizard starts. To cancel, press [No].
3. When the touchscreen instructs you to start WPS, press the WPS button on your wireless access point/router. Then press [OK] on your machine. Your machine automatically tries to connect to your wireless network.

If your wireless device is connected successfully, the LCD displays [Connected].

You have completed the wireless network setup. To install drivers and software necessary for operating your device, insert the Brother installation disc into your computer or go to your model's **Downloads** page on the Brother Solutions Center at support.brother.com.

MFC-J3930DW

1. Press [Settings] > [All Settings] > [Network] > [WLAN] > [WPS].
2. When [Enable WLAN?] appears, press [Yes].

   This will start the wireless setup wizard. To cancel, press [No].
3. When the touchscreen instructs you to start WPS, press the WPS button on your wireless access point/router. Then press [OK] on your machine. Your machine automatically tries to connect to your wireless network.

If your wireless device is connected successfully, the display shows [Connected].

You have completed the wireless network setup. To install drivers and software necessary for operating your device, insert the Brother installation disc into your computer or go to your model's **Downloads** page on the Brother Solutions Center at support.brother.com.

Related Information

- Additional Methods of Configuring Your Brother Machine for a Wireless Network

Configure Your Machine for a Wireless Network Using the PIN Method of Wi-Fi Protected Setup™ (WPS)

If your wireless LAN access point/router supports WPS, you can use the Personal Identification Number (PIN) Method to configure your wireless network settings.

The PIN Method is one of the connection methods developed by the Wi-Fi Alliance®. By submitting a PIN created by an Enrollee (your machine) to the Registrar (a device that manages the wireless LAN), you can set up the wireless network and security settings. For more information on how to access WPS mode, see the instructions provided with your wireless access point/router.

Type A

Connection when the wireless LAN access point/router (1) doubles as the Registrar.

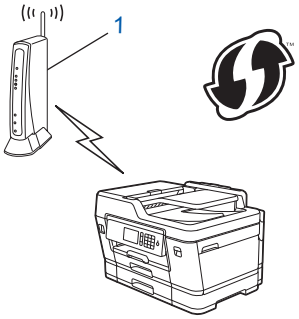

Type B

Connection when another device (2), such as a computer, is used as the Registrar.

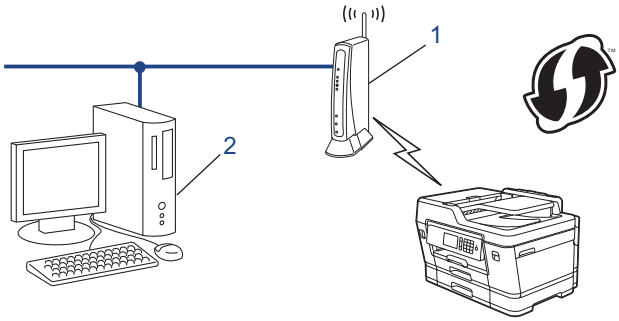

Routers or access points that support WPS are marked with this symbol:

>> MFC-J3530DW
>> MFC-J3930DW

MFC-J3530DW

1. Press [Settings] > [All Settings] > [Network] > [WLAN] > [WPS w/ PIN Code].
2. When [Enable WLAN?] appears, press [Yes].
   The wireless setup wizard starts. To cancel, press [No].
3. The LCD displays an eight-digit PIN and the machine starts searching for a wireless LAN access point/router.

4. Using a computer connected to the network, type in your browser's address bar the IP address of the device you are using as the Registrar. (For example: http://192.168.1.2)
5. Go to the WPS settings page and type the PIN, and then follow the on-screen instructions.

- The Registrar is usually the wireless LAN access point/router.
- The settings page will differ depending on the brand of wireless LAN access point/router. For more information, see the instructions supplied with your wireless LAN access point/router.

If you are using a Windows Vista, Windows 7, Windows 8, or Windows 10 computer as a Registrar, complete the following steps:

6. Do one of the following:
   - Windows Vista

     Click **(Start)** > **Network** > **Add a wireless device**.
   - Windows 7

     Click **(Start)** > **Devices and Printers** > **Add a device**.
   - Windows 8

     Move your mouse to the lower right corner of your desktop. When the menu bar appears, click **Settings** > **Control Panel** > **Hardware and Sound** > **Devices and Printers** > **Add a device**.
   - Windows 10

     Click > **All apps** > **Windows System** > **Control Panel**. In the **Hardware and Sound** group, click **Add a device**.

- To use a Windows Vista, Windows 7, Windows 8, or Windows 10 computer as a Registrar, you must register it to your network in advance. For more information, see the instructions supplied with your wireless LAN access point/router.
- If you use Windows 7, Windows 8, or Windows 10 as a Registrar, you can install the printer driver after the wireless configuration by following the on-screen instructions. To install the full driver and software package, use the Brother installation disc.

7. Select your machine and click **Next**.
8. Type the PIN displayed on the machine's LCD, and then click **Next**.
9. Select your network, and then click **Next**.
10. Click **Close**.

MFC-J3930DW

1. Press [Settings] > [Wi-Fi] > [WPS w/ PIN Code].
2. When [Enable WLAN?] appears, press [Yes].

   This will start the wireless setup wizard. To cancel, press [No].
3. The LCD displays an eight-digit PIN and the machine starts searching for a wireless LAN access point/router.
4. Using a computer connected to the network, type in your browser's address bar the IP address of the device you are using as the Registrar. (For example: http://192.168.1.2)
5. Go to the WPS settings page and type the PIN, and then follow the on-screen instructions.

- The Registrar is usually the wireless LAN access point/router.
- The settings page will differ depending on the brand of wireless LAN access point/router. For more information, see the instructions supplied with your wireless LAN access point/router.

If you are using a Windows Vista, Windows 7, Windows 8, or Windows 10 computer as a Registrar, complete the following steps:

6. Do one of the following:
   - Windows Vista

Click **(Start)** > **Network** > **Add a wireless device**.

- Windows 7

  Click **(Start)** > **Devices and Printers** > **Add a device**.

- Windows 8

  Move your mouse to the lower right corner of your desktop. When the menu bar appears, click **Settings** > **Control Panel** > **Hardware and Sound** > **Devices and Printers** > **Add a device**.

- Windows 10

  Click > **All apps** > **Windows System** > **Control Panel**. In the **Hardware and Sound** group, click **Add a device**.

- To use a Windows Vista, Windows 7, Windows 8, or Windows 10 computer as a Registrar, you must register it to your network in advance. For more information, see the instructions supplied with your wireless LAN access point/router.
- If you use Windows 7, Windows 8, or Windows 10 as a Registrar, you can install the printer driver after the wireless configuration by following the on-screen instructions. To install the full driver and software package, use the Brother installation disc.

7. Select your machine and click **Next**.
8. Type the PIN displayed on the machine's LCD, and then click **Next**.
9. Select your network, and then click **Next**.
10. Click **Close**.

Related Information

- Additional Methods of Configuring Your Brother Machine for a Wireless Network

Configure Your Machine for a Wireless Network When the SSID is Not Broadcast

>> MFC-J3530DW
>> MFC-J3930DW

MFC-J3530DW

Before configuring your machine, we recommend writing down your wireless network settings. You will need this information before you continue with the configuration.

1. Check and write down the current wireless network settings.

Network Name (SSID)

Communication Mode	Authentication Method	Encryption Mode	Network Key
Infrastructure	Open System	NONE	-
		WEP	
	Shared Key	WEP	
	WPA/WPA2-PSK	AES	
		TKIP	

For example:

Network Name (SSID)
HELLO

Communication Mode	Authentication Method	Encryption Mode	Network Key
Infrastructure	WPA2-PSK	AES	12345678

If your router uses WEP encryption, enter the key used as the first WEP key. Your Brother machine supports the use of the first WEP key only.

2. Press [Settings] > [All Settings] > [Network] > [WLAN] > [Setup Wizard].
3. When [Enable WLAN?] appears, press [Yes].

   The wireless setup wizard starts. To cancel, press [No].
4. The machine searches for your network and displays a list of available SSIDs. Press ▲ or ▼ to display the [<New SSID>] option, and then press it.
5. Press [OK].
6. Enter the SSID name, and then press [OK].

For more information about how to enter text, see the *Appendix*.

7. Press [Infrastructure].
8. Select the Authentication Method, and then press it.
9. Do one of the following:
   - If you selected the [Open System] option, press either [None] or [WEP].

     If you selected the [WEP] option for Encryption type, enter the WEP key, and then press [OK].
   - If you selected the [Shared Key] option, enter the WEP key, and then press [OK].

- If you selected the [WPA/WPA2-PSK] option, press either [TKIP+AES] or [AES].

  Enter the WPA key, and then press [OK].

- For more information about how to enter text, see the *Appendix*.
- Your Brother machine supports the use of the first WEP key only.

10. The machine attempts to connect to the wireless device you have selected.

If your wireless device is connected successfully, the LCD displays [Connected].

You have completed the wireless network setup. To install drivers and software necessary for operating your device, insert the Brother installation disc into your computer or go to your model's **Downloads** page on the Brother Solutions Center at support.brother.com.

MFC-J3930DW

Before configuring your machine, we recommend writing down your wireless network settings. You will need this information before you continue with the configuration.

1. Check and write down the current wireless network settings.

Network Name (SSID)

Communication Mode	Authentication Method	Encryption Mode	Network Key
Infrastructure	Open System	NONE	-
		WEP	
	Shared Key	WEP	
	WPA/WPA2-PSK	AES	
		TKIP	

For example:

Network Name (SSID)
HELLO

Communication Mode	Authentication Method	Encryption Mode	Network Key
Infrastructure	WPA2-PSK	AES	12345678

If your router uses WEP encryption, enter the key used as the first WEP key. Your Brother machine supports the use of the first WEP key only.

2. Press [Settings] > [All Settings] > [Network] > [WLAN] > [Setup Wizard].
3. When [Enable WLAN?] appears, press [Yes].

   This will start the wireless setup wizard. To cancel, press [No].
4. The machine searches for your network and displays a list of available SSIDs. Swipe up or down or press ▲ or ▼ to display [<New SSID>]. Press [<New SSID>], and then press [OK].
5. Enter the SSID name, and then press [OK].

For more information about how to enter text, see the *Appendix*.

6. Press [Infrastructure] when instructed.
7. Select the Authentication Method.
8. Do one of the following:

- If you selected the [Open System] option, select the Encryption type [None] or [WEP], and then press it.

  If you selected the [WEP] option for Encryption type, enter the WEP key, and then press [OK].
- If you selected the [Shared Key] option, enter the WEP key, and then press [OK].
- If you selected the [WPA/WPA2-PSK] option, press [TKIP+AES] or [AES].

  Enter the WPA key, and then press [OK].

- For more information about how to enter text, see the *Appendix*.
- Your Brother machine supports the use of the first WEP key only.

9. The machine attempts to connect to the wireless device you have selected.

If your wireless device is connected successfully, the display shows [Connected].

You have completed the wireless network setup. To install drivers and software necessary for operating your device, insert the Brother installation disc into your computer or go to your model's **Downloads** page on the Brother Solutions Center at support.brother.com.

Related Information

- Additional Methods of Configuring Your Brother Machine for a Wireless Network
- I Cannot Complete the Wireless Network Setup Configuration

Configure Your Machine for an Enterprise Wireless Network

>> MFC-J3530DW
>> MFC-J3930DW

MFC-J3530DW

Before configuring your machine, we recommend writing down your wireless network settings. You will need this information before you continue with the configuration.

1. Check and record the current wireless network settings.

Network Name (SSID)

Communication Mode	Authentication Method	Encryption Mode	User ID	Password
Infrastructure	LEAP	CKIP		
	EAP-FAST/NONE	AES		
		TKIP		
	EAP-FAST/MS-CHAPv2	AES		
		TKIP		
	EAP-FAST/GTC	AES		
		TKIP		
	PEAP/MS-CHAPv2	AES		
		TKIP		
	PEAP/GTC	AES		
		TKIP		
	EAP-TTLS/CHAP	AES		
		TKIP		
	EAP-TTLS/MS-CHAP	AES		
		TKIP		
	EAP-TTLS/MS-CHAPv2	AES		
		TKIP		
	EAP-TTLS/PAP	AES		
		TKIP		
	EAP-TLS	AES		-
		TKIP		-

For example:

Network Name (SSID)
HELLO

Communication Mode	Authentication Method	Encryption Mode	User ID	Password
Infrastructure	EAP-FAST/MS-CHAPv2	AES	Brother	12345678

- If you configure your machine using EAP-TLS authentication, you must install the client certificate issued by a CA before you start configuration. Contact your network administrator about the client certificate. If you have installed more than one certificate, we recommend writing down the certificate name you want to use.
- If you verify your machine using the common name of the server certificate, we recommend writing down the common name before you start configuration. Contact your network administrator about the common name of the server certificate.

2. Press [Settings] > [All Settings] > [Network] > [WLAN] > [Setup Wizard].
3. When [Enable WLAN?] appears, press [Yes].

   The wireless setup wizard starts. To cancel, press [No].
4. The machine searches for your network and displays a list of available SSIDs. Press ▲ or ▼ to display the [<New SSID>] option, and then press it.
5. Press [OK].
6. Enter the SSID name, and then press [OK].

For more information about how to enter text, see the *Appendix*.

7. Press [Infrastructure].
8. Select the Authentication Method, and then press it.
9. Do one of the following:
   - If you selected the [LEAP] option, enter the user ID, and then press [OK]. Enter the Password, and then press [OK].
   - If you selected the [EAP-FAST], [PEAP] or [EAP-TTLS] option, select the Inner Authentication method [NONE], [CHAP], [MS-CHAP], [MS-CHAPv2], [GTC] or [PAP].

Depending on your Authentication method, the Inner Authentication method selections differ.

   Select the encryption type [TKIP+AES] or [AES].

   Select the verification method [No Verification], [CA] or [CA + Server ID].
   - If you selected the [CA + Server ID] option, enter the server ID, user ID and password (if required), and then press [OK] for each option.
   - For other selections, enter the user ID and Password, and then press [OK] for each option.

If you have not imported a CA certificate into your machine, the machine displays [No Verification].

   - If you selected the [EAP-TLS] option, select the encryption type [TKIP+AES] or [AES].

     The machine will display a list of available Client Certificates, and then select the certificate.

     Select the verification method [No Verification], [CA] or [CA + Server ID].
     - If you selected the [CA + Server ID] option, enter the server ID and user ID, and then press [OK] for each option.
     - For other selections, enter the user ID, and then press [OK].

If you have not imported a CA certificate into your machine, the machine displays [No Verification].

10. The machine attempts to connect to the wireless device you have selected.

If your wireless device is connected successfully, the LCD displays [Connected].

You have completed the wireless network setup. To install drivers and software necessary for operating your device, insert the Brother installation disc into your computer or go to your model's **Downloads** page on the Brother Solutions Center at support.brother.com.

MFC-J3930DW

Before configuring your machine, we recommend writing down your wireless network settings. You will need this information before you continue with the configuration.

1. Check and record the current wireless network settings.

Network Name (SSID)

Communication Mode	Authentication Method	Encryption Mode	User ID	Password
Infrastructure	LEAP	CKIP		
	EAP-FAST/NONE	AES		
		TKIP		
	EAP-FAST/MS-CHAPv2	AES		
		TKIP		
	EAP-FAST/GTC	AES		
		TKIP		
	PEAP/MS-CHAPv2	AES		
		TKIP		
	PEAP/GTC	AES		
		TKIP		
	EAP-TTLS/CHAP	AES		
		TKIP		
	EAP-TTLS/MS-CHAP	AES		
		TKIP		
	EAP-TTLS/MS-CHAPv2	AES		
		TKIP		
	EAP-TTLS/PAP	AES		
		TKIP		
	EAP-TLS	AES		-
		TKIP		-

For example:

Network Name (SSID)
HELLO

Communication Mode	Authentication Method	Encryption Mode	User ID	Password
Infrastructure	EAP-FAST/MS-CHAPv2	AES	Brother	12345678

- If you configure your machine using EAP-TLS authentication, you must install the client certificate issued by a CA before you start configuration. Contact your network administrator about the client certificate. If you have installed more than one certificate, we recommend writing down the certificate name you want to use.
- If you verify your machine using the common name of the server certificate, we recommend writing down the common name before you start configuration. Contact your network administrator about the common name of the server certificate.

2. Press [Settings] > [All Settings] > [Network] > [WLAN] > [Setup Wizard].
3. When [Enable WLAN?] appears, press [Yes].

   This will start the wireless setup wizard. To cancel, press [No].
4. The machine searches for your network and displays a list of available SSIDs. Swipe up or down or press ▲ or ▼ to display [<New SSID>]. Press [<New SSID>], and then press [OK].
5. Enter the SSID name, and then press [OK].

For more information about how to enter text, see the *Appendix*.

6. Press [Infrastructure] when instructed.
7. Select the Authentication Method.
8. Do one of the following:
   - If you selected the [LEAP] option, enter the user ID, and then press [OK]. Enter the Password, and then press [OK].
   - If you selected the [EAP-FAST], [PEAP] or [EAP-TTLS] option, select the Inner Authentication method [NONE], [CHAP], [MS-CHAP], [MS-CHAPv2], [GTC] or [PAP].

Depending on your Authentication method, the Inner Authentication method selections differ.

   Select the encryption type [TKIP+AES] or [AES].

   Select the verification method [No Verification], [CA] or [CA + Server ID].

   - If you selected the [CA + Server ID] option, enter the server ID, user ID and password (if required), and then press [OK] for each option.
   - For other selections, enter the user ID and Password, and then press [OK] for each option.

If you have not imported a CA certificate into your machine, the machine displays [No Verification].

   - If you selected the [EAP-TLS] option, select the encryption type [TKIP+AES] or [AES].

     The machine will display a list of available Client Certificates, and then select the certificate.

     Select the verification method [No Verification], [CA] or [CA + Server ID].

     - If you selected the [CA + Server ID] option, enter the server ID and user ID, and then press [OK] for each option.
     - For other selections, enter the user ID, and then press [OK].

If you have not imported a CA certificate into your machine, the machine displays [No Verification].

9. The machine attempts to connect to the wireless device you have selected.

If your wireless device is connected successfully, the display shows [Connected].

You have completed the wireless network setup. To install drivers and software necessary for operating your device, insert the Brother installation disc into your computer or go to your model's **Downloads** page on the Brother Solutions Center at support.brother.com.

Related Information

- Additional Methods of Configuring Your Brother Machine for a Wireless Network

Use Wi-Fi Direct®

- Print or Scan from Your Mobile Device Using Wi-Fi Direct
- Configure Your Wi-Fi Direct Network
- I Cannot Complete the Wireless Network Setup Configuration

Print or Scan from Your Mobile Device Using Wi-Fi Direct

Wi-Fi Direct is one of the wireless configuration methods developed by the Wi-Fi Alliance®. It allows you to configure a secured wireless network between your Brother machine and a mobile device, such as an Android™ device, Windows device, iPhone, iPod touch, or iPad, without using an access point. Wi-Fi Direct supports wireless network configuration using the one-push or PIN Method of Wi-Fi Protected Setup™ (WPS). You can also configure a wireless network by manually setting a SSID and password. Your Brother machine's Wi-Fi Direct feature supports WPA2™ security with AES encryption.

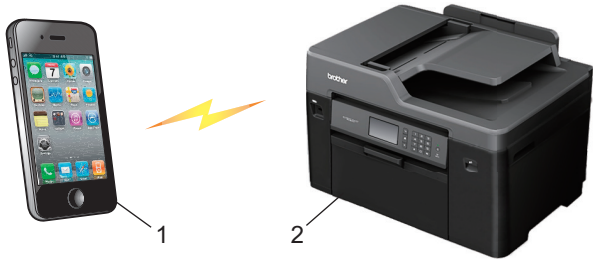

1. Mobile device
2. Your Brother machine

- Although the Brother machine can be used in both a wired (supported models only) and wireless network, only one connection method can be used at a time. However, a wireless network connection and Wi-Fi Direct connection, or a wired network connection and Wi-Fi Direct connection can be used at the same time.
- The Wi-Fi Direct supported device can become a Group Owner (G/O). When configuring the Wi-Fi Direct network, the Group Owner (G/O) serves as an access point.

Related Information

- Use Wi-Fi Direct®

Configure Your Wi-Fi Direct Network

Configure your Wi-Fi Direct network settings from your machine's control panel.

- Wi-Fi Direct Network Configuration Overview
- Configure Your Wi-Fi Direct Network Using the One-Push Method
- Configure Your Wi-Fi Direct Network Using the One-Push Method of Wi-Fi Protected Setup™ (WPS)
- Configure Your Wi-Fi Direct Network Using the PIN Method
- Configure Your Wi-Fi Direct Network Using the PIN Method of Wi-Fi Protected Setup™ (WPS)
- Configure Your Wi-Fi Direct Network Manually

Wi-Fi Direct Network Configuration Overview

The following instructions offer five methods for configuring your Brother machine in a wireless network environment. Select the method you prefer for your environment.

Check your mobile device for configuration.

1. Does your mobile device support Wi-Fi Direct?

Option	Description
Yes	Go to Step 2
No	Go to Step 3

2. Does your mobile device support one-push configuration for Wi-Fi Direct?

Option	Description
Yes	See *Related Information*: Configure Your Wi-Fi Direct Network Using the One-Push Method
No	See *Related Information*: Configure Your Wi-Fi Direct Network Using the PIN Method

3. Does your mobile device support Wi-Fi Protected Setup™ (WPS)?

Option	Description
Yes	Go to Step 4
No	See *Related Information*: Configure Your Wi-Fi Direct Network Manually

4. Does your mobile device support one-push configuration for Wi-Fi Protected Setup™ (WPS)?

Option	Description
Yes	See *Related Information*: Configure Your Wi-Fi Direct Network Using the One-Push Method of Wi-Fi Protected Setup™ (WPS)
No	See *Related Information*: Configure Your Wi-Fi Direct Network Using the PIN Method of Wi-Fi Protected Setup™ (WPS)

To use Brother iPrint&Scan functionality in a Wi-Fi Direct network configured by one-push configuration using Wi-Fi Direct or by PIN Method configuration using Wi-Fi Direct, the device you use to configure Wi-Fi Direct must be running Android™ 4.0 or greater.

Related Information

- Configure Your Wi-Fi Direct Network
- Configure Your Wi-Fi Direct Network Using the One-Push Method
- Configure Your Wi-Fi Direct Network Using the PIN Method
- Configure Your Wi-Fi Direct Network Manually
- Configure Your Wi-Fi Direct Network Using the One-Push Method of Wi-Fi Protected Setup™ (WPS)
- Configure Your Wi-Fi Direct Network Using the PIN Method of Wi-Fi Protected Setup™ (WPS)

Configure Your Wi-Fi Direct Network Using the One-Push Method

>> MFC-J3530DW
>> MFC-J3930DW

MFC-J3530DW

If your mobile device supports Wi-Fi Direct, follow these steps to configure a Wi-Fi Direct network:

When the machine receives the Wi-Fi Direct request from your mobile device, the message [Wi-Fi Direct connection request received. Press [OK] to connect.] will appear on the LCD. Press [OK] to connect.

1. Press [Settings] > [All Settings] > [Network] > [Wi-Fi Direct] > [Push Button].
2. Activate Wi-Fi Direct on your mobile device (see your mobile device's user's guide for instructions) when [Activate Wi-Fi Direct on other device. Then Press [OK].] appears. Press [OK] on your Brother machine.

   This will start the Wi-Fi Direct setup.
3. Do one of the following:
   - When your Brother machine is the Group Owner (G/O), connect your mobile device to the machine directly.
   - When your Brother machine is not the Group Owner (G/O), it will display available device names with which to configure a Wi-Fi Direct network. Select the mobile device to which you want to connect. Search for available devices again by pressing [Rescan].

If your mobile device connects successfully, the machine displays [Connected]. You have completed the Wi-Fi Direct network setup.

MFC-J3930DW

If your mobile device supports Wi-Fi Direct, follow these steps to configure a Wi-Fi Direct network:

When the machine receives the Wi-Fi Direct request from your mobile device, the message [Wi-Fi Direct connection request received. Press [OK] to connect.] will be displayed. Press [OK] to connect.

1. Press [Settings] > [All Settings] > [Network] > [Wi-Fi Direct] > [Push Button].
2. Activate Wi-Fi Direct on your mobile device (see your mobile device's user's guide for instructions) when [Activate Wi-Fi Direct on other device. Then Press [OK].] appears. Press [OK] on your Brother machine.

   This will start the Wi-Fi Direct setup.
3. Do one of the following:
   - When your Brother machine is the Group Owner (G/O), connect your mobile device to the machine directly.
   - When your Brother machine is not the Group Owner (G/O), it will display available device names with which to configure a Wi-Fi Direct network. Select the mobile device to which you want to connect. Search for available devices again by pressing [Rescan].

If your mobile device connects successfully, the machine displays the message [Connected]. You have completed the Wi-Fi Direct network setup.

Related Information

- Configure Your Wi-Fi Direct Network
- Wi-Fi Direct Network Configuration Overview

Configure Your Wi-Fi Direct Network Using the One-Push Method of Wi-Fi Protected Setup™ (WPS)

>> MFC-J3530DW
>> MFC-J3930DW

MFC-J3530DW

If your mobile device supports WPS (PBC; Push Button Configuration), follow these steps to configure a Wi-Fi Direct network:

When the machine receives the Wi-Fi Direct request from your mobile device, the message `[Wi-Fi Direct connection request received. Press [OK] to connect.]` will appear on the LCD. Press `[OK]` to connect.

1. Press `[Settings]` > `[All Settings]` > `[Network]` > `[Wi-Fi Direct]` > `[Group Owner]` > `[On]`.
2. Press `[Push Button]`.
3. Activate your mobile device's WPS one-push configuration method (see your mobile device's user's guide for instructions). When `[Activate Wi-Fi Direct on other device. Then Press [OK].]` appears on the machine's LCD, press `[OK]` on your machine.

   This will start the Wi-Fi Direct setup.

If your mobile device connects successfully, the machine displays `[Connected]`. You have completed the Wi-Fi Direct network setup.

MFC-J3930DW

If your mobile device supports WPS (PBC; Push Button Configuration), follow these steps to configure a Wi-Fi Direct network:

When the machine receives the Wi-Fi Direct request from your mobile device, the message `[Wi-Fi Direct connection request received. Press [OK] to connect.]` will be displayed. Press `[OK]` to connect.

1. Press `[Settings]` > `[All Settings]` > `[Network]` > `[Wi-Fi Direct]` > `[Group Owner]` > `[On]`.
2. Press `[Push Button]`.
3. Activate your mobile device's WPS one-push configuration method (see your mobile device's user's guide for instructions). When `[Activate Wi-Fi Direct on other device. Then Press [OK].]` appears on the machine's LCD, press `[OK]` on your machine.

   This will start the Wi-Fi Direct setup.

If your mobile device connects successfully, the machine displays the message `[Connected]`. You have completed the Wi-Fi Direct network setup.

Related Information

- Configure Your Wi-Fi Direct Network
- Wi-Fi Direct Network Configuration Overview

Configure Your Wi-Fi Direct Network Using the PIN Method

>> MFC-J3530DW
>> MFC-J3930DW

MFC-J3530DW

If your mobile device supports the PIN Method of Wi-Fi Direct, follow these steps to configure a Wi-Fi Direct network:

When the machine receives the Wi-Fi Direct request from your mobile device, the message [Wi-Fi Direct connection request received. Press [OK] to connect.] will appear on the LCD. Press [OK] to connect.

1. Press [Settings] > [All Settings] > [Network] > [Wi-Fi Direct] > [PIN Code].
2. Activate Wi-Fi Direct on your mobile device (see your mobile device's user's guide for instructions) when [Activate Wi-Fi Direct on other device. Then Press [OK].] appears. Press [OK] on your Brother machine.

   This will start the Wi-Fi Direct setup.
3. Do one of the following:
   - When your Brother machine is the Group Owner (G/O), it will wait for a connection request from your mobile device. When [PIN Code] appears, enter the PIN displayed on your mobile device in the machine. Press [OK]. Follow the instructions.

     If the PIN is displayed on your Brother machine, enter the PIN in your mobile device.
   - When your Brother machine is not the Group Owner (G/O), it will display available device names with which to configure a Wi-Fi Direct network. Select the mobile device to which you want to connect. Search for available devices again by pressing [Rescan].

     Do one of the following:
     - Press [Display PIN Code] to display the PIN on your machine and enter the PIN in your mobile device. Follow the instructions.
     - Press [Input PIN Code] to enter a PIN shown on your mobile device in the machine, and then press [OK]. Follow the instructions.

       If your mobile device does not display a PIN, press on your Brother machine. Go back to step 1 and try again.

If your mobile device connects successfully, the machine displays [Connected]. You have completed the Wi-Fi Direct network setup.

MFC-J3930DW

If your mobile device supports the PIN Method of Wi-Fi Direct, follow these steps to configure a Wi-Fi Direct network:

When the machine receives the Wi-Fi Direct request from your mobile device, the message [Wi-Fi Direct connection request received. Press [OK] to connect.] will be displayed. Press [OK] to connect.

1. Press [Settings] > [All Settings] > [Network] > [Wi-Fi Direct] > [PIN Code].

2. Activate Wi-Fi Direct on your mobile device (see your mobile device's user's guide for instructions) when [Activate Wi-Fi Direct on other device. Then Press [OK].] appears. Press [OK] on your Brother machine.

   This will start the Wi-Fi Direct setup.

3. Do one of the following:
   - When your Brother machine is the Group Owner (G/O), it will wait for a connection request from your mobile device. When [PIN Code] appears, enter the PIN displayed on your mobile device in the machine. Press [OK]. Follow the instructions.

     If the PIN is displayed on your Brother machine, enter the PIN in your mobile device.
   - When your Brother machine is not the Group Owner (G/O), it will display available device names with which to configure a Wi-Fi Direct network. Select the mobile device to which you want to connect. Search for available devices again by pressing [Rescan].

     Do one of the following:
     - Press [Display PIN Code] to display the PIN on your machine and enter the PIN in your mobile device. Follow the instructions.
     - Press [Input PIN Code] to enter a PIN shown on your mobile device in the machine, and then press [OK]. Follow the instructions.

       If your mobile device does not display a PIN, press on your Brother machine. Go back to step 1 and try again.

If your mobile device connects successfully, the machine displays the message [Connected]. You have completed the Wi-Fi Direct network setup.

Related Information

- Configure Your Wi-Fi Direct Network
- Wi-Fi Direct Network Configuration Overview

Configure Your Wi-Fi Direct Network Using the PIN Method of Wi-Fi Protected Setup™ (WPS)

>> MFC-J3530DW
>> MFC-J3930DW

MFC-J3530DW

If your mobile device supports the PIN Method of Wi-Fi Protected Setup™ (WPS), follow these steps to configure a Wi-Fi Direct network:

When the machine receives the Wi-Fi Direct request from your mobile device, the message [Wi-Fi Direct connection request received. Press [OK] to connect.] will appear on the LCD. Press [OK] to connect.

1. Press [Settings] > [All Settings] > [Network] > [Wi-Fi Direct] > [Group Owner] > [On] > [PIN Code].
2. When [Activate Wi-Fi Direct on other device. Then Press [OK].] is displayed, activate your mobile device's WPS PIN configuration method (see your mobile device's user's guide for instructions), and then press [OK] on your Brother machine.

   This will start the Wi-Fi Direct setup.
3. The machine will wait for a connection request from your mobile device. When [PIN Code] appears, enter the PIN displayed on your mobile device in the machine. Press [OK].

If your mobile device connects successfully, the machine displays [Connected]. You have completed the Wi-Fi Direct network setup.

MFC-J3930DW

If your mobile device supports the PIN Method of Wi-Fi Protected Setup™ (WPS), follow these steps to configure a Wi-Fi Direct network:

When the machine receives the Wi-Fi Direct request from your mobile device, the message [Wi-Fi Direct connection request received. Press [OK] to connect.] will be displayed. Press [OK] to connect.

1. Press [Settings] > [All Settings] > [Network] > [Wi-Fi Direct] > [Group Owner] > [On] > [PIN Code].
2. When [Activate Wi-Fi Direct on other device. Then Press [OK].] is displayed, activate your mobile device's WPS PIN configuration method (see your mobile device's user's guide for instructions), and then press [OK] on your Brother machine.

   This will start the Wi-Fi Direct setup.
3. The machine will wait for a connection request from your mobile device. When [PIN Code] appears, enter the PIN displayed on your mobile device in to the machine. Press [OK].

If your mobile device connects successfully, the machine displays the message [Connected]. You have completed the Wi-Fi Direct network setup.

Related Information

- Configure Your Wi-Fi Direct Network

- Wi-Fi Direct Network Configuration Overview

Configure Your Wi-Fi Direct Network Manually

>> MFC-J3530DW
>> MFC-J3930DW

MFC-J3530DW

If your mobile device does not support Wi-Fi Direct or WPS, you must configure a Wi-Fi Direct network manually.

1. Press [Settings] > [All Settings] > [Network] > [Wi-Fi Direct] > [Manual].
2. The machine will display the SSID name and Password. Go to your mobile device's wireless network settings screen and enter the SSID name and password.

If your mobile device connects successfully, the machine displays [Connected]. You have completed the Wi-Fi Direct network setup.

MFC-J3930DW

If your mobile device does not support Wi-Fi Direct or WPS, you must configure a Wi-Fi Direct network manually.

1. Press [Settings] > [All Settings] > [Network] > [Wi-Fi Direct] > [Manual].
2. The machine will display the SSID name and Password. Go to your mobile device's wireless network settings screen and enter the SSID name and password.

If your mobile device connects successfully, the machine displays the message [Connected]. You have completed the Wi-Fi Direct network setup.

Related Information

- Configure Your Wi-Fi Direct Network
- Wi-Fi Direct Network Configuration Overview

Advanced Network Features

- Print the Network Configuration Report
- Fax Using the Internet (I-Fax)
- Synchronize Time with the SNTP Server Using Web Based Management

Print the Network Configuration Report

The Network Configuration Report lists the network configuration, including the network print server settings.

- Node Name: The Node Name appears on the current Network Configuration Report. The default Node Name is "BRNxxxxxxxxxxxx" for a wired network or "BRWxxxxxxxxxxxx" for a wireless network (where "xxxxxxxxxxxx" is your machine's MAC Address / Ethernet Address.)
- If the `[IP Address]` on the Network Configuration Report shows 0.0.0.0, wait for one minute and try printing it again.
- You can find your machine's settings, such as the IP address, subnet mask, node name, and MAC Address on the report, for example:
  - IP address: 192.168.0.5
  - Subnet mask: 255.255.255.0
  - Node name: BRN000ca0000499
  - MAC Address: 00-0c-a0-00-04-99

>> MFC-J3530DW
>> MFC-J3930DW

MFC-J3530DW

1. Press [Settings] > [All Settings] > [Print Reports] > [Network Configuration] > [Yes].

   The machine prints the current Network Configuration Report.

MFC-J3930DW

1. Press [Settings] > [All Settings] > [Print Reports] > [Network Configuration] > [Yes].

   The machine prints the current Network Configuration Report.

Related Information

- Advanced Network Features
- Access Web Based Management
- Where Can I Find My Brother Machine's Network Settings?
- Use the Network Connection Repair Tool (Windows)
- I Want to Check that My Network Devices are Working Correctly
- Configure IEEE 802.1x Authentication for a Wired or a Wireless Network Using Web Based Management (Web Browser)
- Disable and Enable AirPrint Using Web Based Management (Web Browser)
- Error and Maintenance Messages

Fax Using the Internet (I-Fax)

With Brother's I-Fax program, you can send and receive fax documents using the Internet as the transport mechanism. Documents are transmitted in email messages as attached TIFF files. Your computer can send and receive documents as long as it has an application that can generate and view TIFF files. You can use any TIFF viewer application. Documents sent via the Brother machine will be converted into a TIFF format automatically. If you want to send and receive messages to and from your Brother machine, your computer's email application must support Multipurpose Internet Mail Extensions (MIME).

To use this feature, go to the Brother Solutions Center at support.brother.com, click **Downloads** on your model page and download the I-Fax Install Tool.

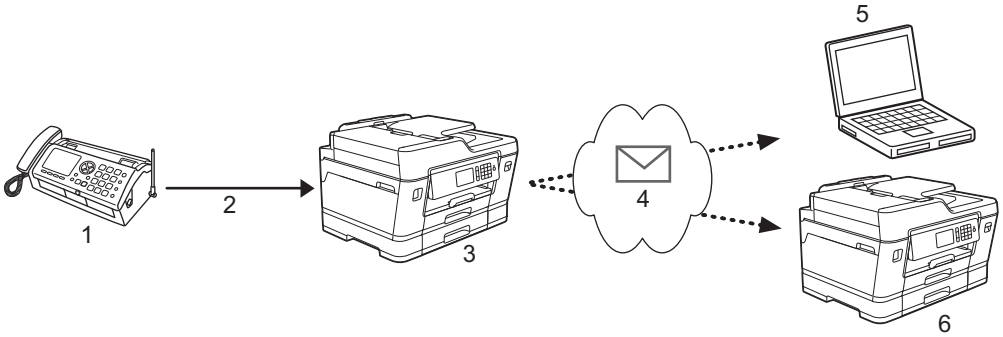

1. Fax (Sender)
2. Telephone line
3. Your Brother Machine (Receiver/Sender)
4. The Internet
5. A computer receives a forwarded email
6. A fax machine receives a forwarded fax

- I-Fax supports sending and receiving documents in Letter or A4 format and in monochrome only.
- If your document is in Ledger or A3 format, it will be reduced to Letter or A4 format automatically when it is sent.

Related Information

- Advanced Network Features
- Important Information about Internet Fax (I-Fax)
- Configure Your Brother Machine for Email or I-Fax
- I-Fax Options
- Forward Received Email and Fax Messages

Important Information about Internet Fax (I-Fax)

I-Fax communication on a LAN is very similar to communication via email; however, it is different from fax communication using standard phone lines. The following is important information for using I-Fax:

- Factors such as the receiver's location, structure of the LAN and how busy the circuit (such as the Internet) is may cause the system to take a longer time than usual to send an error mail.
- When sending confidential documents, we recommend using standard phone lines instead of the Internet (due to its low level of security).
- If the receiver's mail system is not MIME-compatible, you cannot use I-Fax to send documents. If possible, find out in advance, and note that some servers will not send an error reply.
- If a document is too large to send via I-Fax, it may not reach the receiver.
- You cannot change the font or size of the text in any Internet mail you receive.

Related Information

- Fax Using the Internet (I-Fax)

Configure Your Brother Machine for Email or I-Fax

Before using I-Fax, configure your Brother machine to communicate with your network and mail server. You can configure these items using the machine's control panel, Web Based Management, Remote setup, or BRAdmin Professional. We recommend using Web Based Management to configure the optional items.

1. Start your web browser.
2. Type "http://machine's IP address" in your browser's address bar (where "machine's IP address" is the machine's IP address).

   For example:

   http://192.168.1.2
3. No password is required by default. Type a password if you have set one, and then click .
4. Click the **Network** tab.
5. Click the **Protocol** menu in the left navigation bar.
6. In the **POP3/IMAP4/SMTP** field, click **Advanced Settings** and configure the following settings:
   - **Send E-mail Settings(SMTP)**
     - **Port**
     - **Server Authentication Method**
     - **SMTP-AUTH Account Name**
     - **SMTP-AUTH Account Password**
   - **Receive E-mail Settings(POP3/IMAP4)**
     - **Protocol**
     - **Mailbox Name**
     - **Mailbox Password**

If you are unsure of any of these items, contact your system administrator.

7. When finished, click **Submit**.

   The **Test Send/Receive E-mail Configuration** dialog box appears.
8. Follow the instructions in the dialog box to test the current settings.

Related Information

- Fax Using the Internet (I-Fax)
- Initial Setup for Email or I-Fax
- Send an I-Fax
- Receive an I-Fax Automatically
- Poll the Server Manually
- I-Fax Options

Initial Setup for Email or I-Fax

Before sending your I-Fax, use Web Based Management to configure sending and receiving options, if needed.

1. Start your web browser.
2. Type "http://machine's IP address" in your browser's address bar (where "machine's IP address" is the machine's IP address).

   For example:

   http://192.168.1.2
3. No password is required by default. Type a password if you have set one, and then click .
4. Click the **Fax** tab.
5. Click **I-Fax** in the left navigation bar.
6. Click **E-mail Send** and configure the following settings:

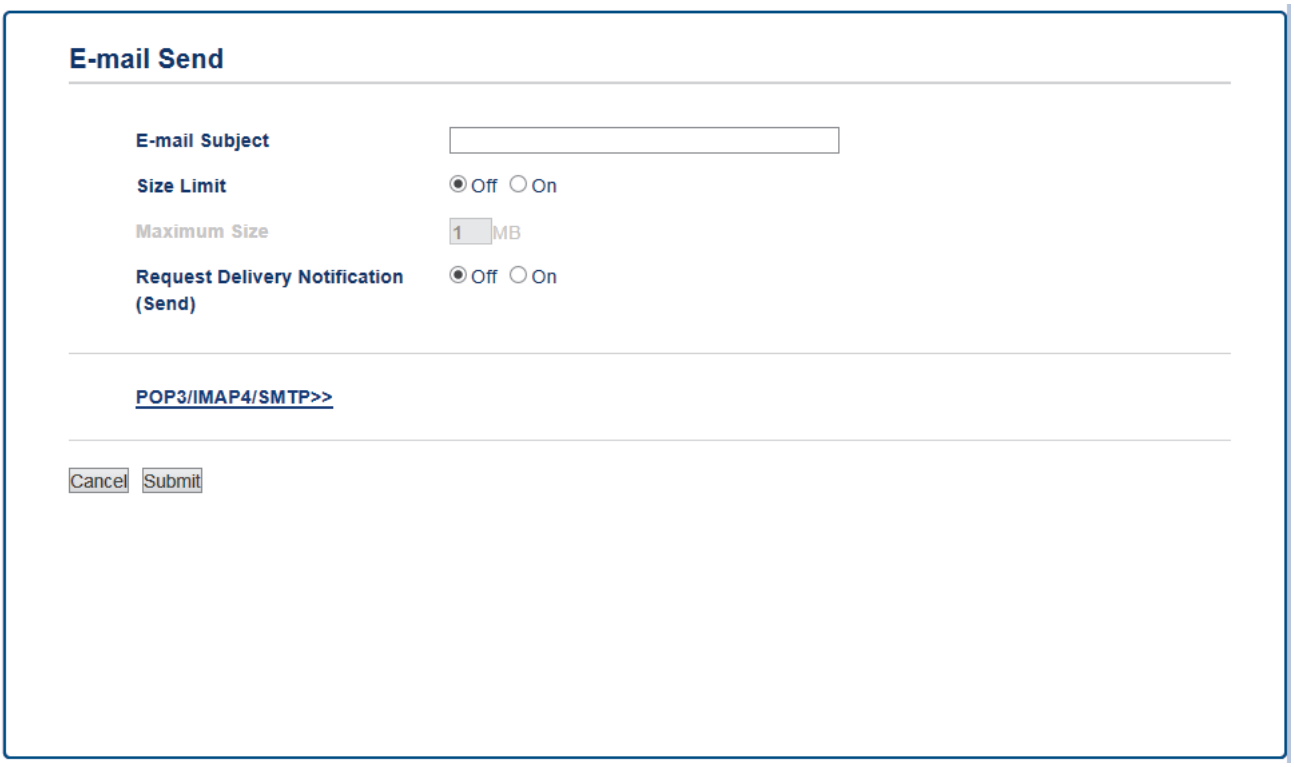

   - **E-mail Subject**
   - **Size Limit**
   - **Request Delivery Notification (Send)**
7. When finished, click **Submit**.

Related Information

- Configure Your Brother Machine for Email or I-Fax
- Forward Received Email and Fax Messages

Send an I-Fax

Sending an I-Fax is like sending a normal fax. Make sure that your recipient's information is saved in your email address book, and load the document you want to I-Fax into your Brother machine.

- If the computer to which you want to send a document is not running Windows Server 2008/2012/2012 R2, Windows Vista, Windows 7, Windows 8, or Windows 10, ask the computer's owner to install software that can view TIFF files.
- To send multiple pages, use the ADF.

>> MFC-J3530DW
>> MFC-J3930DW

MFC-J3530DW

1. Load your document.
2. Do one of the following:
   - If Fax Preview is set to [Off], press [Fax].
   - If Fax Preview is set to [On], press [Fax], and then press [Sending Faxes].
3. To change the fax-sending settings, press [Options].
4. Press ▲ or ▼ to scroll through the fax settings. When the setting you want is displayed, press it and choose your preference. When you have finished changing settings, press [OK].
5. Do one of the following:
   - Press , and then enter the email address.
   - Press [Address Book], choose the email address of your recipient, and then press [Apply].
6. Press [Fax Start].

   The machine starts scanning. After the document is scanned, it is transmitted to the recipient via your SMTP server. You can cancel the send operation by pressing during scanning. When the transmission is finished, the machine will enter standby mode.

MFC-J3930DW

1. Load your document.
2. Do one of the following:
   - If [Fax Preview] is set to [Off], press [Fax].
   - If [Fax Preview] is set to [On], press [Fax] and [Sending Faxes].
3. To change the fax-sending settings, press [Options].
4. Swipe up or down or press ▲ or ▼ to scroll through the fax settings. When the setting you want is displayed, press it and choose your preference. When you have finished changing settings, press [OK].
5. Do one of the following:
   - Press , and then enter the email address.
   - Press [Address Book], choose the email address of your recipient, and then press [Apply].
6. Press [Fax Start].

   The machine starts scanning. After the document is scanned, it is transmitted to the recipient via your SMTP server. You can cancel the send operation by pressing during scanning. When the transmission is finished, the machine will enter standby mode.

Related Information

- Configure Your Brother Machine for Email or I-Fax

Receive an I-Fax Automatically

To receive an I-Fax automatically, use Web Based Management to configure receiving options, if needed.

1. Start your web browser.
2. Type "http://machine's IP address" in your browser's address bar (where "machine's IP address" is the machine's IP address).

   For example:

   http://192.168.1.2
3. No password is required by default. Type a password if you have set one, and then click .
4. Click the **Fax** tab.
5. Click **I-Fax** in the left navigation bar.
6. Click **E-mail Receive** and configure the following settings:

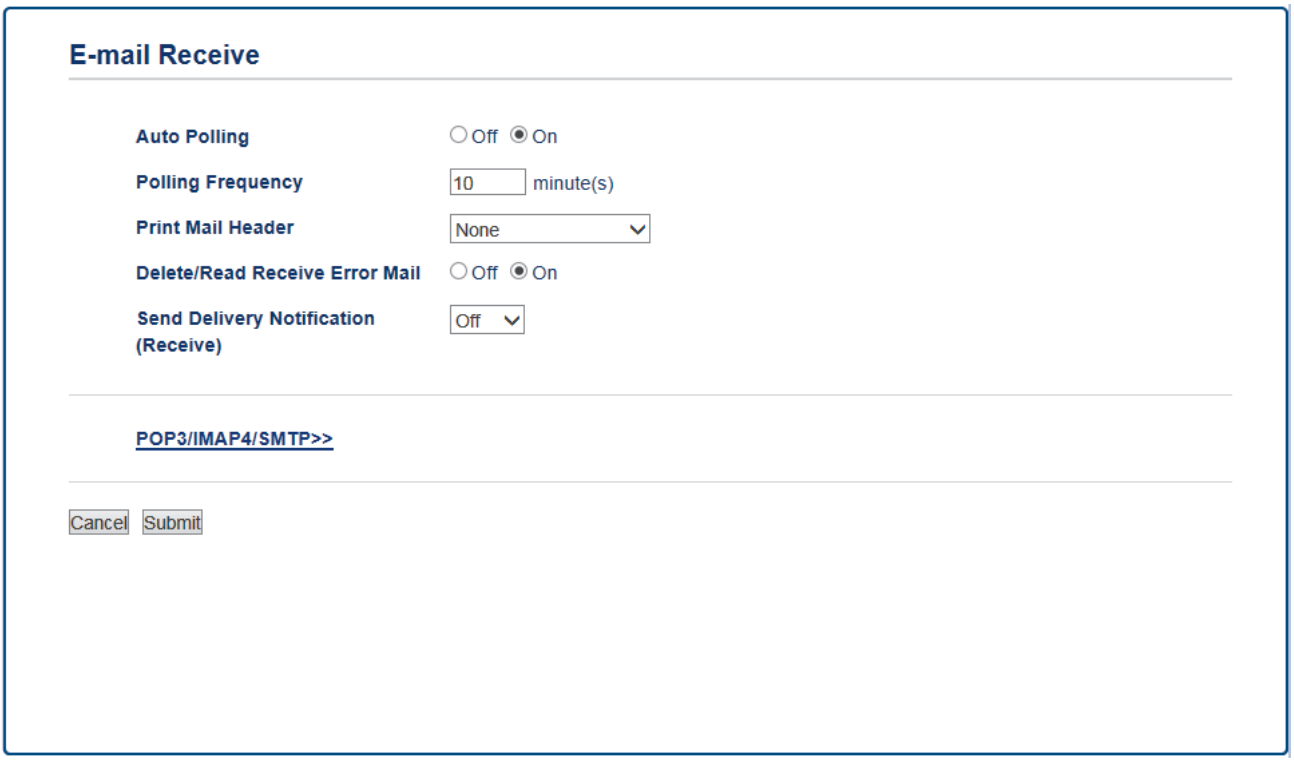

   - **Auto Polling**
   - **Polling Frequency**
   - **Print Mail Header**
   - **Delete/Read Receive Error Mail**
   - **Send Delivery Notification(Receive)**

   There are two ways to receive email messages:

   - POP3/IMAP4 receiving at regular intervals
   - POP3/IMAP4 receiving, manually initiated

   When using POP3/IMAP4 receiving, the machine polls your email server to receive data. Polling can occur at set intervals (for example, you can configure the machine to poll the email server every ten minutes) or you can manually poll the server.
7. When finished, click **Submit**.

- If your machine starts to receive email data, the LCD will display `[Receiving]`.The email will print automatically.
- If your machine is out of paper when receiving data, the received data will be held in the machine's memory. This data will be printed automatically after paper is re-inserted into the machine.
- If the received mail is not in a plain text format, or an attached file is not in the TIFF format, the error message "**ATTACHED FILE FORMAT NOT SUPPORTED**" will be printed.
- If the received mail is too large, the error message "**E-MAIL FILE TOO LARGE**" will be printed.
- If **Delete/Read Receive Error Mail** is **On** (default), then the error mail will be deleted (POP3) or read (IMAP4) from the email server automatically.

Related Information

- Configure Your Brother Machine for Email or I-Fax
- How Received I-Faxes Appear on a Computer
- Forward Received Email and Fax Messages

Poll the Server Manually

>> MFC-J3530DW
>> MFC-J3930DW

MFC-J3530DW

1. Press [Settings] > [All Settings] > [Network] > [E-mail/IFAX] > [Manual Receive] > [Yes].
2. The LCD will display [Receiving] and your machine will print the data from the email server.

MFC-J3930DW

1. Press [Settings] > [All Settings] > [Network] > [E-mail/IFAX] > [Manual Receive] > [Yes].
2. The LCD will display [Receiving] and your machine will print the data from the email server.

Related Information

- Configure Your Brother Machine for Email or I-Fax
- How Received I-Faxes Appear on a Computer
- Forward Received Email and Fax Messages

How Received I-Faxes Appear on a Computer

When a computer receives an I-Fax document, the document is attached to an email message that notifies you in its Subject: line that your email server has received an I-Fax. You can either wait for your Brother machine to poll the email server, or you can manually poll the email server to receive the incoming data.

Related Information

- Poll the Server Manually
- Receive an I-Fax Automatically

I-Fax Options

- Forward Received Email and Fax Messages
- Set Up Relay Broadcast on Your Brother Machine
- Internet Fax (I-Fax) Verification Mail
- I-Fax Error Mail
- Configure Your Brother Machine for Email or I-Fax

Forward Received Email and Fax Messages

Use Brother I-Fax to forward email or standard fax messages to another computer, to a fax machine, or to another I-Fax machine. Enable the Forwarding function using Web Based Management.

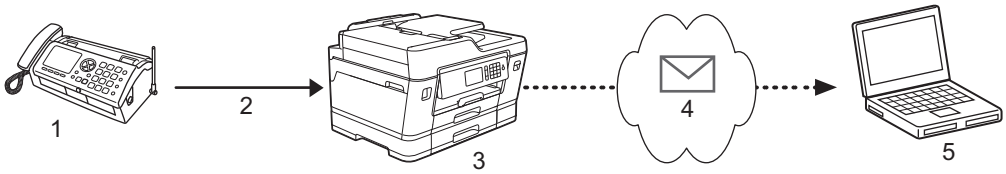

1. Fax (Sender)
2. Telephone line
3. Your Brother Machine (Receiver/Sender)
4. The Internet
5. A computer receives a forwarded email

1. Start your web browser.
2. Type "http://machine's IP address" in your browser's address bar (where "machine's IP address" is the machine's IP address).

   For example:

   http://192.168.1.2
3. No password is required by default. Type a password if you have set one, and then click .
4. Click the **Fax** tab.
5. Click **Remote Fax Options**.
6. Select **Fax Forward** in the **Fwd/Store/Cloud** field.
7. Select the **E-mail Address** check box in **Fax Forward #**, and then type the recipient's E-mail address.
8. When finished, click **Submit**.

Related Information

- I-Fax Options
- Poll the Server Manually
- Fax Using the Internet (I-Fax)
- Initial Setup for Email or I-Fax
- Receive an I-Fax Automatically

Set Up Relay Broadcast on Your Brother Machine

A Relay Broadcast is when your Brother machine receives a message over the Internet and then relays it to another fax machine using conventional telephone lines. If you must fax a document over a long distance or abroad, use the "relay broadcast" function to save the communication fee.

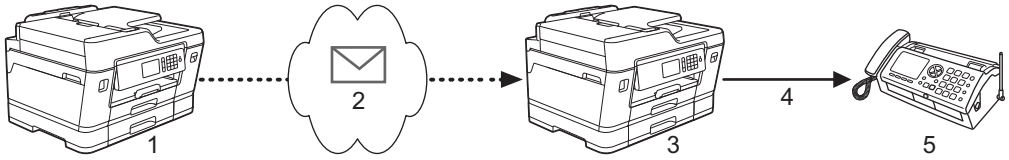

1. Internet-available fax machine
2. The Internet
3. Your Brother Machine
4. Telephone line
5. Fax machine

1. Start your web browser.
2. Type "http://machine's IP address" in your browser's address bar (where "machine's IP address" is the machine's IP address).

   For example:

   http://192.168.1.2
3. No password is required by default. Type a password if you have set one, and then click .
4. Click the **Fax** tab.
5. Click **I-Fax** in the left navigation bar.
6. Click **Relay Function** and configure the following settings:

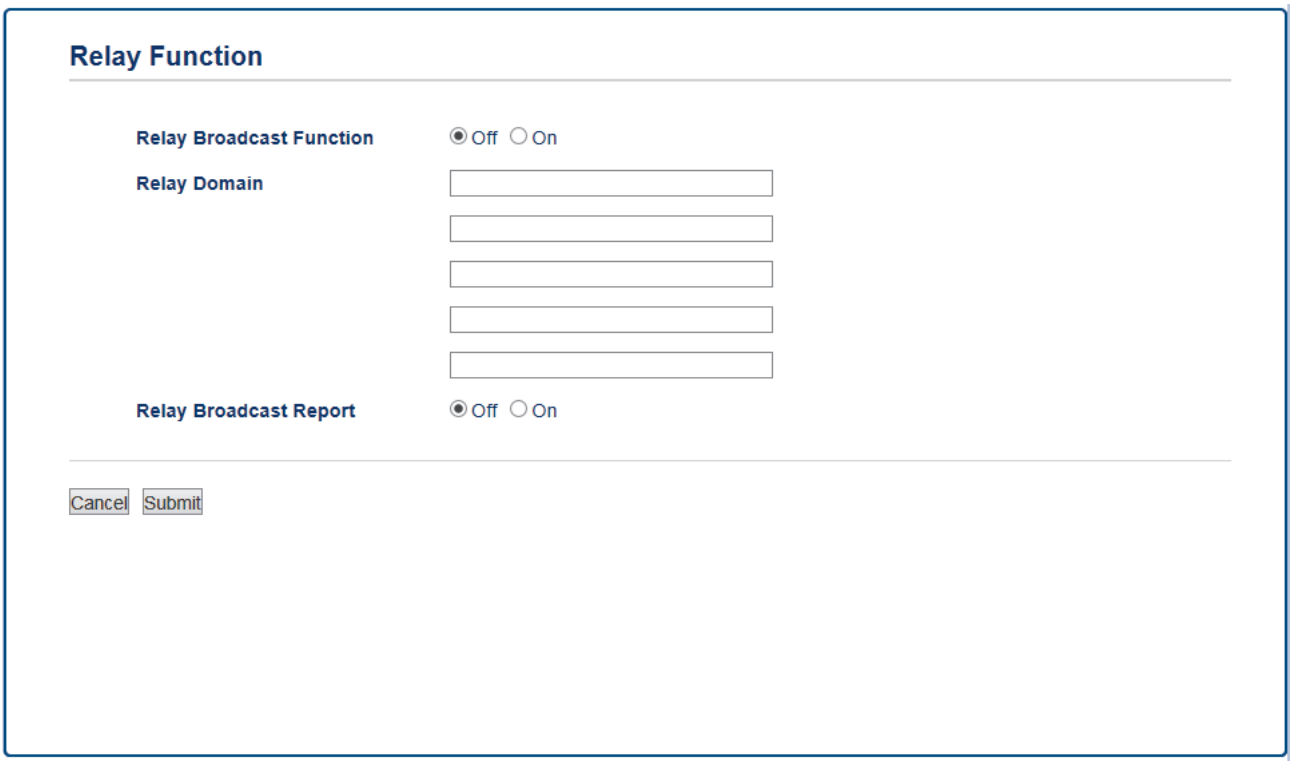

- **Relay Broadcast Function**

  Set the **Relay Broadcast Function** to **On**.
- **Relay Domain**

Configure your machine's domain name on the machine that will broadcast the document to the conventional fax machine. To use your machine as a relay broadcast device, you must specify the trusted domain name (the portion of the name after the "@" sign) on the machine. Use care in selecting a trusted domain: any user on a trusted domain will be able to send a relay broadcast. You can register up to five domain names.

- **Relay Broadcast Report**

  Specify whether or not you want a report to print after the machine completes the relay broadcast.

7. When finished, click **Submit**.

Related Information

- I-Fax Options
- Relay Broadcast from Your Brother Machine
- Relay Broadcast from Your Computer

Relay Broadcast from Your Brother Machine

Use the Relay Broadcast Function to send email from your machine to a conventional fax machine.

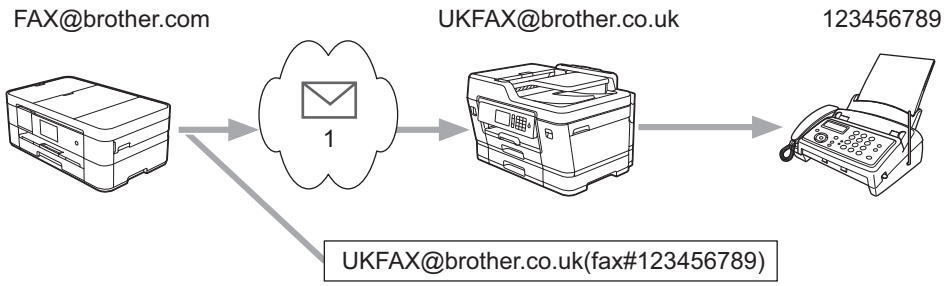

1. The Internet

In this example, your machine's email address is FAX@brother.com and you want to send a document from your machine to a standard fax machine in England with the email address UKFAX@brother.co.uk, and you want your machine to send the document using a conventional telephone line.

>> MFC-J3530DW
>> MFC-J3930DW

MFC-J3530DW

1. Load your document.
2. Do one of the following:
   - If Fax Preview is set to [Off], press [Fax].
   - If Fax Preview is set to [On], press [Fax], and then press [Sending Faxes].
3. Press [Options] > [Broadcasting] > [Add Number].
4. You can add email addresses to the broadcast in the following ways:
   - Press [Add Number] and press , enter the email address and press [OK].
   - Press [Add from Address book]. Press the check box of the email address you want to add to the broadcast. After you have checked all the email addresses you want, press [OK].
   - Press [Search in Address book]. Enter the name and press [OK]. The search results will be displayed. Press the name and then press the email address you want to add to the broadcast.

   The following is an example of how to enter the email address and phone number:

   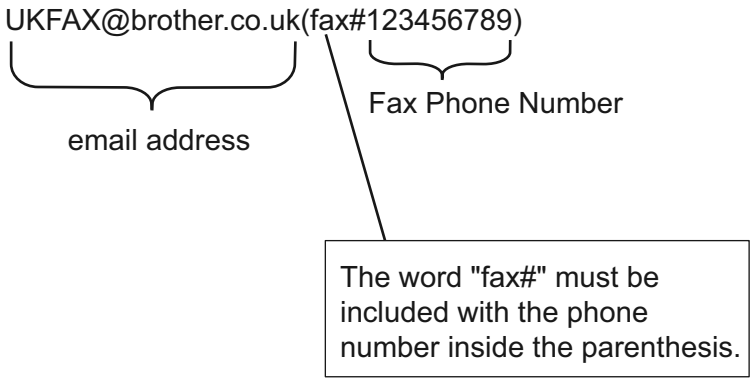

   After you have entered all of the fax numbers, press [OK].
5. Press [Fax Start].

MFC-J3930DW

1. Load your document.

2. Do one of the following:
   - If [Fax Preview] is set to [Off], press [Fax].
   - If [Fax Preview] is set to [On], press [Fax] and [Sending Faxes].
3. Press [Options] > [Broadcasting] > [Add Number].
4. You can add email addresses to the broadcast in the following ways:
   - Press [Add Number] and press , enter the email address and press [OK].
   - Press [Add from Address book]. Press the check box of the email address you want to add to the broadcast. After you have checked all the email addresses you want, press [OK].
   - Press [Search in Address book]. Enter the name and press [OK]. The search results will be displayed. Press the name and then press the email address you want to add to the broadcast.

   The following is an example of how to enter the email address and phone number:

   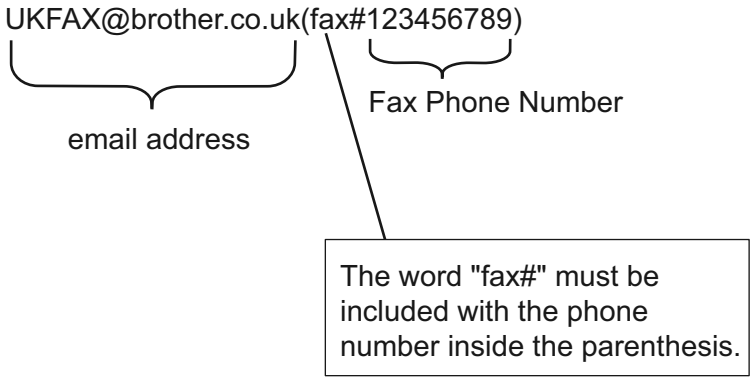

   After you have entered all of the fax numbers, press [OK].
5. Press [Fax Start].

Related Information

- Set Up Relay Broadcast on Your Brother Machine

Relay Broadcast from Your Computer

Use the Relay Broadcast Function to send email from your computer to a conventional fax machine.

Some email applications do not support sending an email to multiple fax numbers. If your email application cannot support multiple fax numbers, you can relay to only one fax machine at a time.

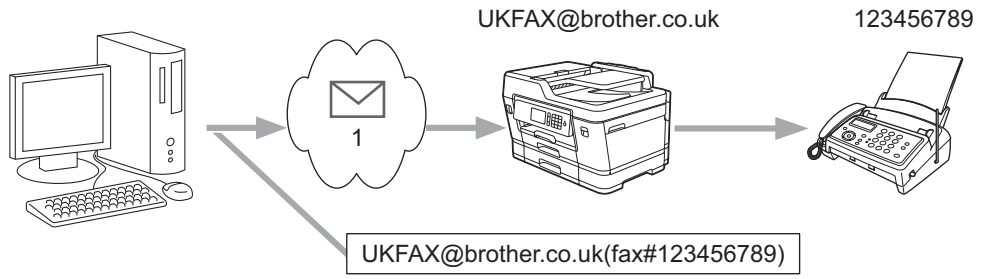

1. The Internet

If you are sending an email to a conventional fax machine, the method of entering the fax machine's fax number will vary, depending on the mail application you are using.

1. In your email application, create a new mail message and type the email address of the relay machine and fax number of the first fax machine in the "TO" box.

   The following is an example of how to enter the email address and fax number:

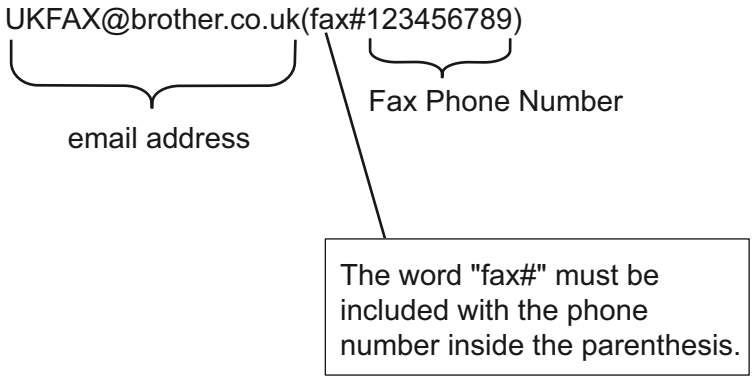

For Microsoft Outlook, the address information must be entered into the address book as follows:

Name: fax#123456789

Email address: UKFAX@brother.co.uk

2. Type the email address of the relay machine and fax number of the second fax machine in the "TO" box.
3. Send the email.

Related Information

- Set Up Relay Broadcast on Your Brother Machine

Internet Fax (I-Fax) Verification Mail

- Verification Mail for sending allows you to request notification from the receiving station where your I-Fax or email was received and processed.
- Verification Mail for receiving allows you to transmit a default report back to the sending station after successfully receiving and processing an I-Fax or email.

To use this feature, set the `[Notification]` options in the `[Setup Mail RX]` and `[Setup Mail TX]` options of your Brother machine's control panel menu.

Related Information

- I-Fax Options
- Enable Send Notifications for TX Verification Mail
- Enable Receive Notifications for TX Verification Mail

Enable Send Notifications for TX Verification Mail

>> MFC-J3530DW
>> MFC-J3930DW

MFC-J3530DW

1. Press [Settings] > [All Settings] > [Network] > [E-mail/IFAX] > [Setup Mail TX] > [Notification].
2. When switched to [On], an additional field of information is sent with the image data. This field is named "MDN".

The receiver must support the MDN field to be able to send a notification report, otherwise the request will be ignored.

3. Press .

MFC-J3930DW

1. Press [Settings] > [All Settings] > [Network] > [E-mail/IFAX] > [Setup Mail TX] > [Notification].
2. When switched to [On], an additional field of information is sent with the image data. This field is named "MDN".

The receiver must support the MDN field to be able to send a notification report, otherwise the request will be ignored.

3. Press .

Related Information

- Internet Fax (I-Fax) Verification Mail

Enable Receive Notifications for TX Verification Mail

>> MFC-J3530DW
>> MFC-J3930DW

MFC-J3530DW

1. Press [Settings] > [All Settings] > [Network] > [E-mail/IFAX] > [Setup Mail RX] > [Notification].
2. Press one of the three possible settings:

Option	Description
Receive Notification On	When Receive Notification is On, a fixed message is sent back to the sender to indicate successful reception and processing of the message. These fixed messages depend on the operation requested by the sender. Example: SUCCESS: Received From <Mail Address>
Receive Notification MDN	When Receive Notification is MDN, a report to indicate successful reception and processing is sent back to the sender if the originating station sent a request confirmation to the MDN field.
Receive Notification Off	When Receive Notification is Off, all forms of receive notification are disabled and no message is sent back to the sender regardless of the request.

- To send TX verification mail, the Sender must configure these settings:
  - Switch [Notification] in [Setup Mail TX] to [On].
  - Switch [Header] in [Setup Mail RX] to [All] or [Subject+From+To].
- To receive TX verification mail, the Receiver must configure these settings:
  - Switch [Notification] in [Setup Mail RX] to [On].

3. Press .

MFC-J3930DW

1. Press [Settings] > [All Settings] > [Network] > [E-mail/IFAX] > [Setup Mail RX] > [Notification].
2. Press one of the three possible settings:

Option	Description
Receive Notification On	When Receive Notification is On, a fixed message is sent back to the sender to indicate successful reception and processing of the message. These fixed messages depend on the operation requested by the sender. Example: SUCCESS: Received From <Mail Address>
Receive Notification MDN	When Receive Notification is MDN, a report to indicate successful reception and processing is sent back to the sender if the originating station sent a request confirmation to the MDN field.

Option	Description
Receive Notification `Off`	When Receive Notification is `Off`, all forms of receive notification are disabled and no message is sent back to the sender regardless of the request.

- To send TX verification mail, the Sender must configure these settings:
  - Switch `[Notification]` in `[Setup Mail TX]` to `[On]`.
  - Switch `[Header]` in `[Setup Mail RX]` to `[All]` or `[Subject+From+To]`.
- To receive TX verification mail, the Receiver must configure these settings:
  - Switch `[Notification]` in `[Setup Mail RX]` to `[On]`.

3. Press .

Related Information

- Internet Fax (I-Fax) Verification Mail

I-Fax Error Mail

If there is a delivery error while sending an I-Fax, the mail server will send an error message back to the Brother machine and the error message will be printed.

If there is an error while receiving an I-Fax, an error message will be printed, for example, "The message being sent to the machine was not in a TIFF format."

To receive the error mail and have it print on your machine, in `[Setup Mail RX]`, switch the `[Header]` option to `[All]` or to `[Subject+From+To]`.

Related Information

- I-Fax Options

Synchronize Time with the SNTP Server Using Web Based Management

The Simple Network Time Protocol (SNTP) is used to synchronize the time used by the machine for authentication with the SNTP time server. (This is not the time displayed on the machine's LCD.) You can automatically or manually synchronize the machine's time with the Coordinated Universal Time (UTC) provided by the SNTP time server.

- Configure Date and Time Using Web Based Management
- Configure the SNTP Protocol Using Web Based Management

Configure Date and Time Using Web Based Management

Configure date and time to synchronize the time used by the machine with the SNTP time server.

This feature is not available in some countries.

1. Start your web browser.
2. Type "http://machine's IP address" in your browser's address bar (where "machine's IP address" is the machine's IP address).

   For example:

   http://192.168.1.2
3. No password is required by default. Type a password if you have set one, and then click .
4. Click the **Administrator** tab.
5. Click **Date&Time** in the left navigation bar.

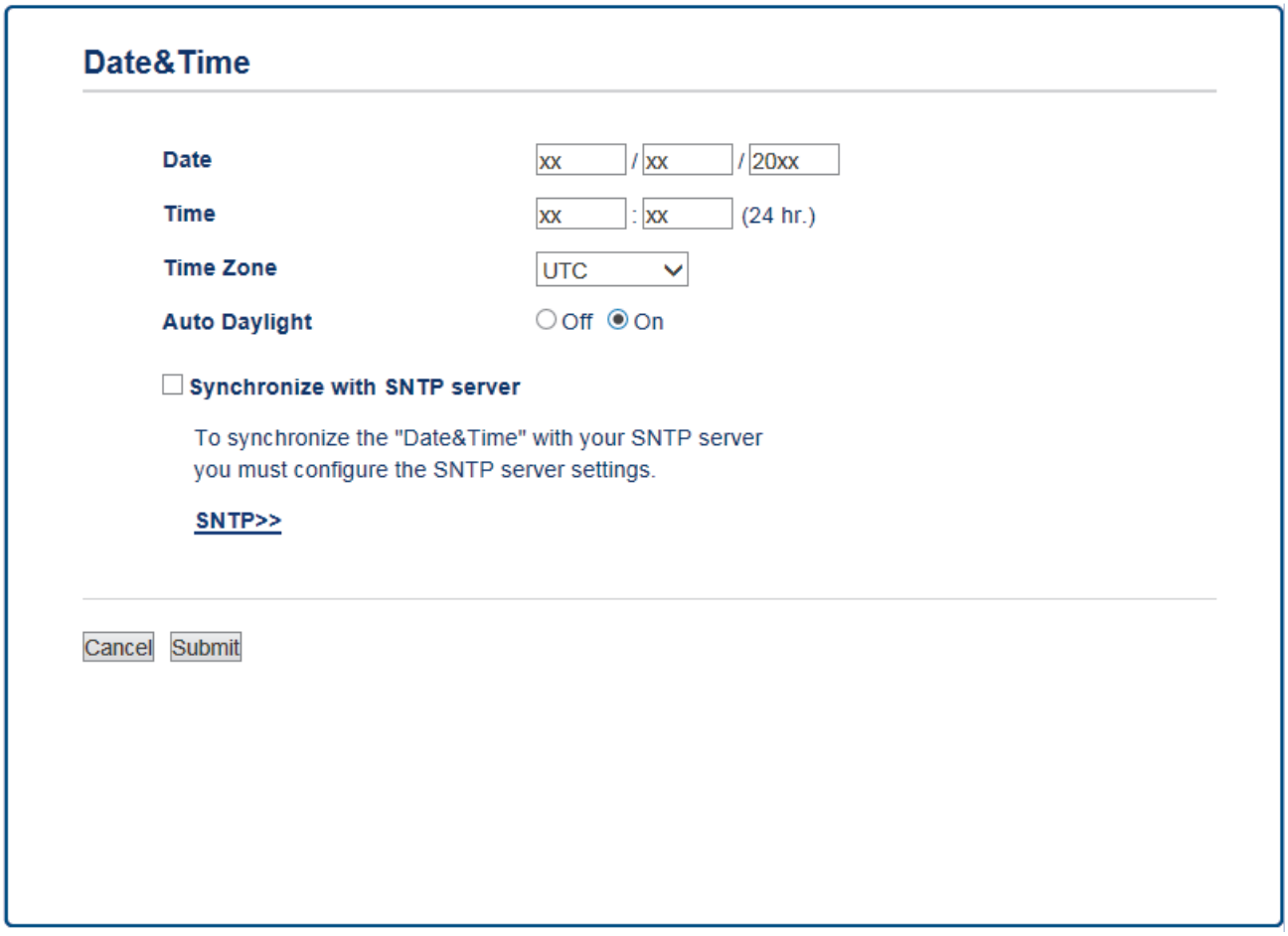

Select the time difference between your location and UTC from the **Time Zone** drop-down list. For example, the time zone for Eastern Time in the USA and Canada is UTC-05:00.

6. Verify the **Time Zone** settings.
7. Select the **Synchronize with SNTP server** check box.
8. Click **Submit**.

Related Information

- Synchronize Time with the SNTP Server Using Web Based Management

Configure the SNTP Protocol Using Web Based Management

Configure the SNTP protocol to synchronize the time the machine uses for authentication with the time kept by the SNTP time server.

1. Start your web browser.
2. Type "http://machine's IP address" in your browser's address bar (where "machine's IP address" is the machine's IP address).

   For example:

   http://192.168.1.2
3. No password is required by default. Type a password if you have set one, and then click .
4. Click the **Network** tab.
5. Click the **Protocol** menu in the left navigation bar.
6. Select the **SNTP** check box to activate the settings.
7. Restart your Brother machine to activate the configuration.
8. Next to the SNTP check box, click **Advanced Settings** and follow the instructions below:

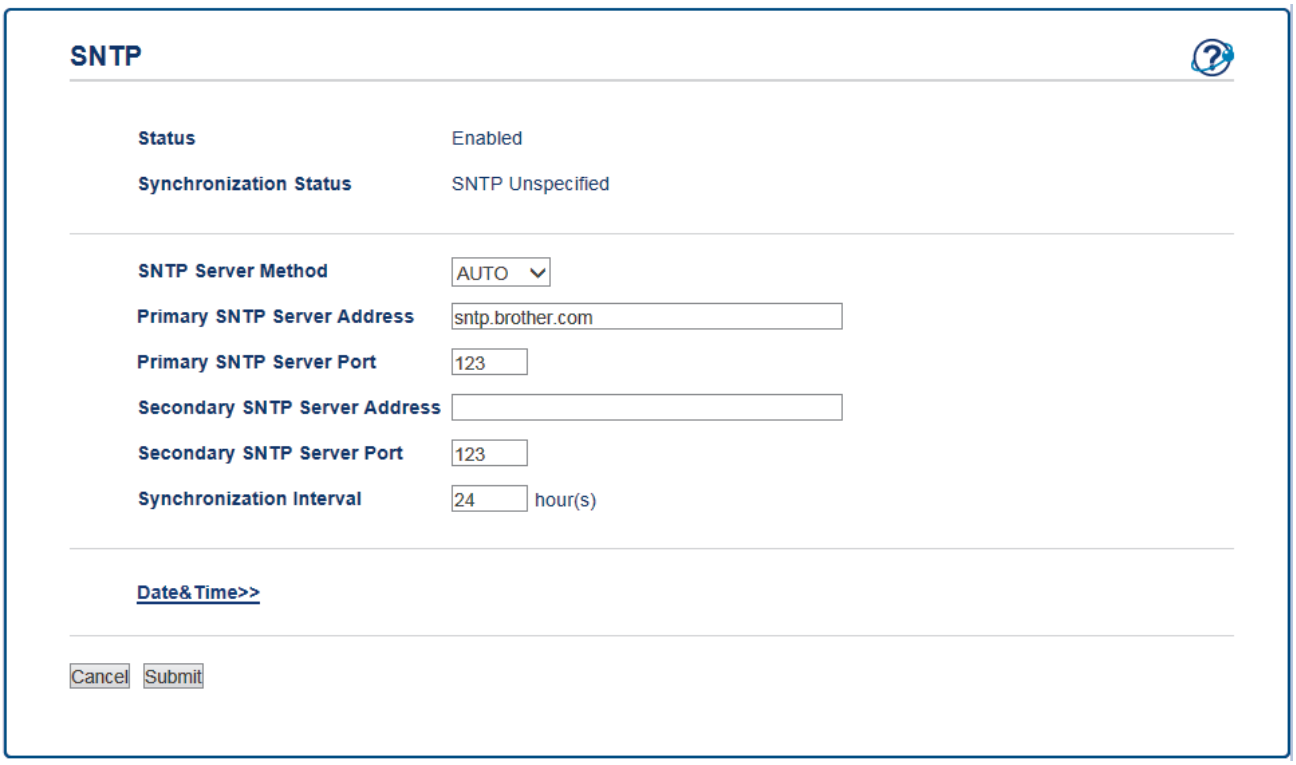

Option	Description
Status	Displays whether the SNTP protocol is enabled or disabled.
Synchronization Status	Confirm the latest synchronization status.
SNTP Server Method	Select **AUTO** or **STATIC**. • **AUTO** If you have a DHCP server in your network, the SNTP server will obtain the address from that server automatically. • **STATIC** Type the address you want to use.

Option	Description
Primary SNTP Server Address **Secondary SNTP Server Address**	Type the server address (up to 64 characters). The secondary SNTP server address is used as a backup to the primary SNTP server address. If the primary server is unavailable, the machine will contact the secondary SNTP server.
Primary SNTP Server Port **Secondary SNTP Server Port**	Type the port number (1-65535). The secondary SNTP server port is used as a backup to the primary SNTP server port. If the primary port is unavailable, the machine will contact the secondary SNTP port.
Synchronization Interval	Type the number of hours between server synchronization attempts (1-168 hours).

9. Click **Submit**.

Related Information

- Synchronize Time with the SNTP Server Using Web Based Management

Technical Information for Advanced Users

- Reset the Network Settings to Factory Default
- Print the WLAN Report

Reset the Network Settings to Factory Default

You can use your machine's control panel to reset the print server to its default factory settings. This resets all information, such as the password and IP address.

- This feature restores all wired (supported models only) and wireless network settings to the factory settings.
- You can also reset the print server to its factory settings using BRAdmin Light, BRAdmin Professional, or Web Based Management.

>> MFC-J3530DW
>> MFC-J3930DW

MFC-J3530DW

1. Press [Settings] > [All Settings] > [Network] > [Network Reset].
2. The message confirming reset will be displayed. Press [OK] for two seconds.

   The machine will restart.

MFC-J3930DW

1. Press [Settings] > [All Settings] > [Network] > [Network Reset].
2. The message confirming reset will be displayed. Press [OK] for two seconds.

   The machine will restart.

Related Information

- Technical Information for Advanced Users
- Transfer Your Faxes or Fax Journal Report

Print the WLAN Report

The WLAN Report reflects your machine's wireless status. If the wireless connection fails, check the error code on the printed report.

>> MFC-J3530DW
>> MFC-J3930DW

MFC-J3530DW

1. Press [Settings] > [All Settings] > [Print Reports] > [WLAN Report] > [Yes].

   The machine will print the WLAN Report.

If the WLAN Report does not print, check your machine for errors. If there are no visible errors, wait for one minute and then try to print the report again.

MFC-J3930DW

1. Press [Settings] > [All Settings] > [Print Reports] > [WLAN Report] > [Yes].

   The machine will print the WLAN Report.

If the WLAN Report does not print, check your machine for errors. If there are no visible errors, wait for one minute and then try to print the report again.

Related Information

- Technical Information for Advanced Users
- Wireless LAN Report Error Codes
- My Brother Machine Cannot Print, Scan, or PC-FAX Receive over the Network
- I Want to Check that My Network Devices are Working Correctly
- Configure IEEE 802.1x Authentication for a Wired or a Wireless Network Using Web Based Management (Web Browser)

Wireless LAN Report Error Codes

If the Wireless LAN Report shows that the connection failed, check the error code on the printed report and see the corresponding instructions in the table:

Error Code	Problem and Recommended Solutions
TS-01	The wireless setting is not activated, change the wireless setting to ON. If a network cable is connected to your machine, disconnect it and change the wireless setting of your machine to ON.
TS-02	The wireless access point/router cannot be detected. 1. Check the following two points: • Unplug the power to your wireless access point/router, wait for 10 seconds, and then plug it back in. • If your WLAN access point/router is using MAC address filtering, confirm that the MAC address of the Brother machine is allowed in the filter. 2. If you manually entered the SSID and security information (SSID/authentication method/encryption method/Network Key), the information may be incorrect. Reconfirm the SSID and security information and re-enter the correct information as necessary. This device does not support a 5GHz SSID/ESSID and you must select a 2.4 GHz SSID/ESSID. Make sure the access point/router is set to 2.4 GHz or 2.4 GHz/5 GHz mixed mode.
TS-03	The wireless network and security setting you entered may be incorrect. Reconfirm the wireless network settings. If you do not know this information, ask your network administrator.
TS-04	The Authentication/Encryption methods used by the selected wireless access point/router are not supported by your machine. Change the authentication and encryption methods of the wireless access point/router. Your machine supports the following authentication methods: • WPA-Personal TKIP or AES • WPA2-Personal TKIP or AES • Open WEP or None (without encryption) • Shared key WEP If your problem is not solved, the SSID or network settings you entered may be incorrect. Confirm the wireless network settings.
TS-05	The security information (SSID/Network Key) is incorrect. Confirm the SSID and Network Key.
TS-06	The wireless security information (Authentication method/Encryption method/Network Key) is incorrect. Confirm the wireless security information (Authentication method/Encryption method/Network Key).
TS-07	The machine cannot detect a WLAN access point/router that has WPS enabled. If you want to connect with WPS, you must operate both your machine and the WLAN access point/router. Confirm the connection method for WPS on WLAN access point/router and try starting again. If you do not know how to operate your WLAN access point/router using WPS, see the documentation provided with your WLAN access point/router, ask the manufacturer of your WLAN access point/router, or ask your network administrator.

Error Code	Problem and Recommended Solutions
TS-08	Two or more WLAN access points that have WPS enabled are detected. • Confirm that only one WLAN access point/router within range has the WPS method active and try again. • Try again after a few minutes to avoid interference from other access points.

How to confirm wireless security information (SSID/authentication method/encryption method/Network Key) of your WLAN access point/router:

1. The Default security settings may be provided on a label attached to the WLAN access point/router. Or the manufacturer's name or model number of the WLAN access point/router may be used as the default security settings.
2. See the documentation provided with your WLAN access point/router for information on how to find the security settings.

- If the WLAN access point/router is set to not broadcast the SSID, the SSID will not automatically be detected. You will have to manually enter the SSID name.
- The Network key may also be described as the Password, Security Key or Encryption Key.

If you do not know the SSID and wireless security settings of your WLAN access point/router or how to change the configuration, see the documentation provided with your WLAN access point/router, ask the manufacturer of your access point/router or ask to your Internet provider or network administrator.

Related Information

- Print the WLAN Report
- My Brother Machine Cannot Print, Scan, or PC-FAX Receive over the Network
- I Want to Check that My Network Devices are Working Correctly

Security

- Before Using Network Security Features
- Secure Function Lock 3.0
- Manage Your Network Machine Securely Using SSL/TLS
- Send or Receive an Email Securely
- Use IEEE 802.1x Authentication for a Wired or a Wireless Network

Before Using Network Security Features

Your Brother machine employs some of the latest network security and encryption protocols available today. These network features can be integrated into your overall network security plan to help protect your data and prevent unauthorised access to the machine.

We recommend disabling the FTP and TFTP protocols. Accessing the machine using these protocols is not secure. However, note that if you disable FTP, the Scan to FTP feature will be disabled.

Related Information

- Security

Secure Function Lock 3.0

Brother's Secure Function Lock 3.0 increases security by restricting the functions available on your Brother machine.

- Before Using Secure Function Lock 3.0
- Configure Secure Function Lock 3.0 Using Web Based Management
- Scan Using Secure Function Lock 3.0
- Configure Public Mode for Secure Function Lock 3.0
- Additional Secure Function Lock 3.0 Features
- Register a new ID Card Using Machine's Control Panel

Before Using Secure Function Lock 3.0

Use Secure Function Lock to configure passwords, set specific user page limits, and grant access to some or all of the functions listed here.

You can configure and change the following Secure Function Lock 3.0 settings using Web Based Management or BRAdmin Professional (Windows):

- **Print**

  If you register users' logon names in advance, the users will not need to enter their passwords when they use the print function.
- **Copy**
- **Scan**

  Scan includes scan jobs sent via Brother iPrint&Scan.
- **Fax** (supported models only)
  - **Send**
  - **Receive**
- **Media**
  - **Print from**
  - **Scan to**
- **Web Connect** (supported models only)
- **Apps** (supported models only)
- **Page Limits (*)**
- **Color Print**
- **Page Counters**
- **Card ID (NFC ID)** (supported models only)

  If you register users' Card IDs in advance, a registered user can activate the machine by touching his registered card to the machine's NFC symbol.

Related Information

- Secure Function Lock 3.0

Configure Secure Function Lock 3.0 Using Web Based Management

1. Start your web browser.
2. Type "http://machine's IP address" in your browser's address bar (where "machine's IP address" is the machine's IP address).

   For example:

   http://192.168.1.2
3. No password is required by default. Type a password if you have set one, and then click .
4. Click the **Administrator** tab.
5. Click the **User Restriction Function** menu in the left navigation bar.
6. Select **Secure Function Lock**.
7. Click **Submit**.
8. Click the **Restricted Functions** menu in the left navigation bar.
9. In the **User List / Restricted Functions** field, type a group name or user name.
10. In the **Print** and the other columns, select a check box to allow or clear a check box to restrict the function listed.
11. To configure the maximum page count, select the **On** check box in the **Page Limits** column, and then type the maximum number in the **Max. Pages** field.
12. Click **Submit**.
13. Click the **User List** menu in the left navigation bar.
14. In the **User List** field, type the user name.
15. In the **PIN Number** field, type a four-digit password.
16. To register the user's Card ID, type the card number in the **Card ID (NFC ID)** field (Available only for certain models) .
17. Select **User List / Restricted Functions** from the drop-down list for each user.
18. Click **Submit**.

Related Information

- Secure Function Lock 3.0

Scan Using Secure Function Lock 3.0

Setting Scan restrictions (for administrators)

Secure Function Lock 3.0 allows an administrator to restrict which users are allowed to scan. When the Scan feature is set to Off for the public user setting, only users who have the **Scan** check box selected will be able to scan.

Using the Scan feature (for restricted users)

- To scan using the machine's control panel:

  Restricted users must enter their PINs on the machine's control panel to access Scan mode.
- To scan from a computer:

  Restricted users must enter their PINs on the machine's control panel before scanning from their computers. If the PIN is not entered on the machine's control panel, an error message will appear on the user's computer.

If the machine supports ID card authentication, restricted users can also access Scan mode by touching the NFC symbol on the machine's control panel with their registered ID cards.

Related Information

- Secure Function Lock 3.0

Configure Public Mode for Secure Function Lock 3.0

Use the Secure Function Lock screen to set up Public Mode, which limits the functions available to public users. Public users will not need to enter a password to access the features made available through Public Mode settings.

Public Mode includes print jobs sent via AirPrint and Brother iPrint&Scan.

1. Start your web browser.
2. Type "http://machine's IP address" in your browser's address bar (where "machine's IP address" is the machine's IP address).

   For example:

   http://192.168.1.2
3. No password is required by default. Type a password if you have set one, and then click .
4. Click the **Administrator** tab.
5. Click the **User Restriction Function** menu in the left navigation bar.
6. Select **Secure Function Lock**.
7. Click **Submit**.
8. Click the **Restricted Functions** menu.
9. In the **Public Mode** row, select a check box to allow or clear a check box to restrict the function listed.
10. Click **Submit**.

Related Information

- Secure Function Lock 3.0

Additional Secure Function Lock 3.0 Features

Configure the following features in the Secure Function Lock screen:

All Counter Reset

Click **All Counter Reset**, in the **Page Counters** column, to reset the page counter.

Export to CSV file

Click **Export to CSV file**, to export the current page counter including **User List / Restricted Functions** information as a CSV file.

Card ID (NFC ID) (supported models only)

Click the **User List** menu, and then type a users' Card ID in the **Card ID (NFC ID)** field. You can use your ID card for authentication.

Last Counter Record

Click **Last Counter Record** if you want the machine to retain the page count after the counter has been reset.

Counter Auto Reset

Click **Counter Auto Reset** to configure the time interval you want between page counter reset. Choose a daily, weekly, or monthly interval.

Related Information

- Secure Function Lock 3.0

Register a new ID Card Using Machine's Control Panel

Related Models: MFC-J3930DW

1. Touch the NFC symbol on the machine's control panel with a registered ID Card.
2. Press

displayed at the top left of the screen.
3. Press [Register Card].
4. Touch a new ID Card to the NFC symbol.
   The new ID Card's number is registered to the machine.

   For the supported ID Card types, go to the Brother Solutions Center at support.brother.com to see **FAQs & Troubleshooting**.

5. Press [OK].

Related Information

- Secure Function Lock 3.0

Manage Your Network Machine Securely Using SSL/TLS

- Certificates and Web Based Management

Certificates and Web Based Management

You must configure a certificate to manage your networked Brother machine securely using SSL/TLS. You must use Web Based Management to configure a certificate.

- Supported Security Certificate Features
- Create and Install a Certificate
- Manage Multiple Certificates

Supported Security Certificate Features

Your Brother machine supports the use of multiple security certificates, which allows secure authentication and communication with the machine. The following security certificate features can be used with the machine:

- SSL/TLS communication
- SSL communication for SMTP/POP3/IMAP4 (only available for certain models)
- IEEE 802.1x authentication

The Brother machine supports the following:

- Pre-installed certificate

  Your machine has a pre-installed self-signed certificate. This certificate enables you to use SSL/TLS communication without creating or installing a different certificate.

  The pre-installed self-signed certificate cannot protect your communication from being compromised. We recommend using a certificate that is issued by a trusted organisation for better security.

- Self-signed certificate

  This print server issues its own certificate. Using this certificate, you can easily use the SSL/TLS communication without creating or installing a different certificate from a CA.

- Certificate from a Certificate Authority (CA)

  There are two methods for installing a certificate from a CA. If you already have a certificate from a CA or if you want to use a certificate from an external trusted CA:

  - When using a Certificate Signing Request (CSR) from this print server.
  - When importing a certificate and a private key.

- Certificate Authority (CA) Certificate

  To use a CA certificate that identifies the CA and owns its private key, you must import that CA certificate from the CA before configuring the security features of the Network.

  - If you are going to use SSL/TLS communication, we recommend contacting your system administrator first.
  - When you reset the print server back to its default factory settings, the certificate and the private key that are installed will be deleted. If you want to keep the same certificate and the private key after resetting the print server, export them before resetting, and then reinstall them.

Related Information

- Certificates and Web Based Management
- Configure IEEE 802.1x Authentication for a Wired or a Wireless Network Using Web Based Management (Web Browser)

Create and Install a Certificate

- Step by Step Guide for Creating and Installing a Certificate
- Create and Install a Self-signed Certificate
- Create and Install a Certificate from a Certificate Authority (CA)
- Import and Export a CA Certificate

Step by Step Guide for Creating and Installing a Certificate

There are two options when choosing a security certificate: use a self-signed certificate or use a certificate from a Certificate Authority (CA).

These are a brief summary of the actions required, based on the option you choose.

Option 1

Self-Signed Certificate

1. Create a self-signed certificate using Web Based Management.
2. Install the self-signed certificate on your computer.

Option 2

Certificate from a CA

1. Create a Certificate Signing Request (CSR) using Web Based Management.
2. Install the certificate issued by the CA on your Brother machine using Web Based Management.
3. Install the certificate on your computer.

Related Information

- Create and Install a Certificate

Create and Install a Self-signed Certificate

- Create a Self-signed Certificate
- Install the Self-signed Certificate for Windows users with Administrator Rights
- Import and Export the Self-signed Certificate on your Brother Machine

Create a Self-signed Certificate

1. Start your web browser.
2. Type "http://machine's IP address" in your browser's address bar (where "machine's IP address" is the machine's IP address).

   For example:

   http://192.168.1.2

   - If you are using a Domain Name System or enable a NetBIOS name, you can type another name, such as "SharedPrinter" instead of the IP address.
     - For example:

       http://SharedPrinter

     If you enable a NetBIOS name, you can also use the node name.
     - For example:

       http://brnxxxxxxxxxxxx

     The NetBIOS name can be found in the Network Configuration Report.
   - For Mac, access Web Based Management by clicking the machine's icon on the **Status Monitor** screen.

3. No password is required by default. Type a password if you have set one, and then click .
4. Click the **Network** tab.
5. Click the **Security** tab.
6. Click **Certificate**.
7. Click **Create Self-Signed Certificate**.
8. Enter a **Common Name** and a **Valid Date**.
   - The length of the **Common Name** is less than 64 bytes. Enter an identifier, such as an IP address, node name, or domain name to use when accessing this machine through SSL/TLS communication. The node name is displayed by default.
   - A warning will appear if you use the IPPS or HTTPS protocol and enter a different name in the URL than the **Common Name** that was used for the self-signed certificate.
9. Select your setting from the **Public Key Algorithm** drop-down list. The default setting is **RSA(2048bit)**.
10. Select your setting from the **Digest Algorithm** drop-down list. The default setting is **SHA256**.
11. Click **Submit**.
12. Click **Network**.
13. Click **Protocol**.
14. Click **HTTP Server Settings**.
15. Select the certificate you want to configure from the **Select the Certificate** drop-down list.
16. Click **Submit**.

    The following screen appears.

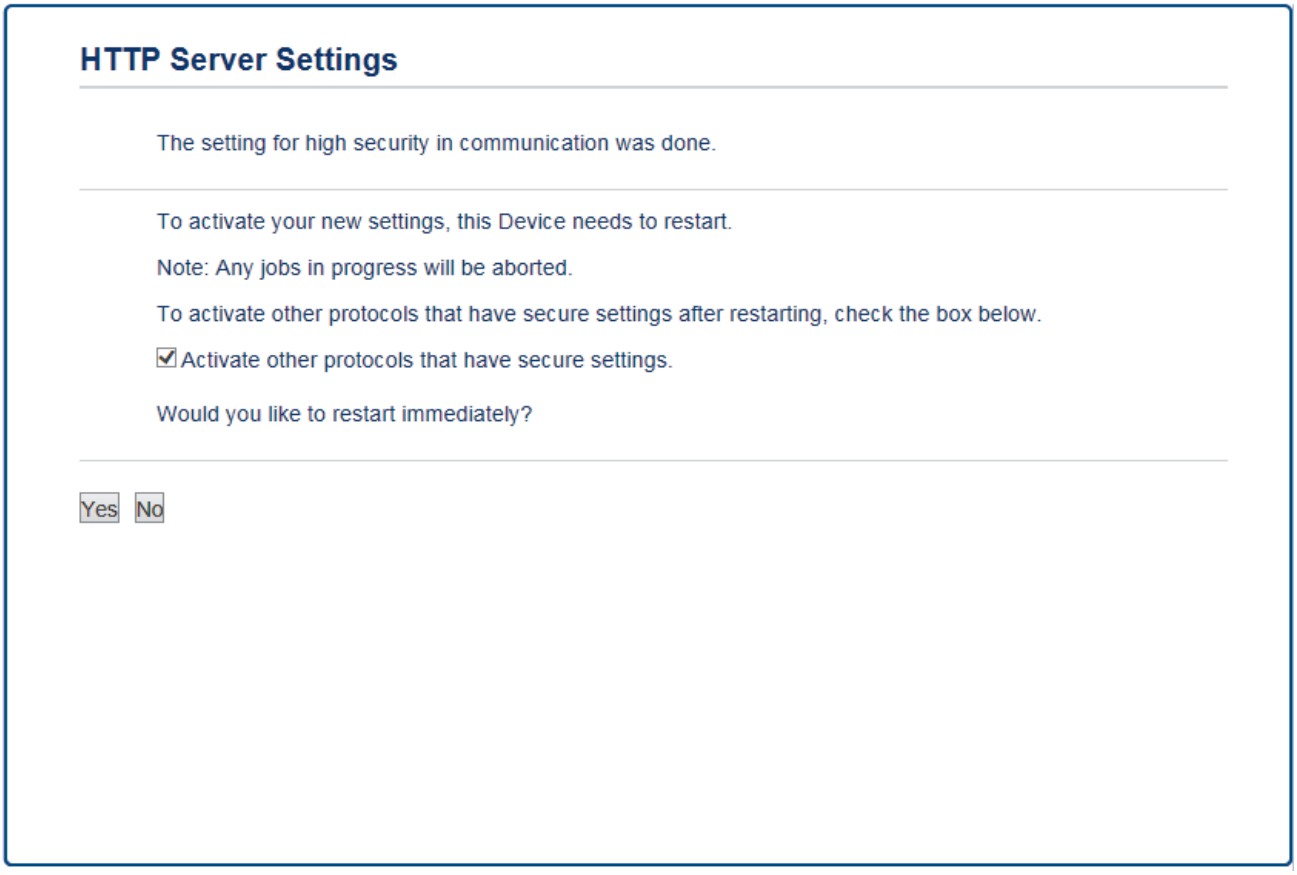

17. Click **Yes** to restart your print server.

The self-signed certificate is created and saved in your machine's memory.

To use SSL/TLS communication, the self-signed certificate must be installed on your computer.

Related Information

- Create and Install a Self-signed Certificate

Install the Self-signed Certificate for Windows users with Administrator Rights

The following steps are for Microsoft Internet Explorer. If you use another web browser, consult the documentation for your web browser to get help with installing certificates.

1. Do one of the following:
   - (Windows Vista, Windows 7, Windows Server 2008)

     Click **(Start)** > **All Programs**.
   - (Windows 8)

     Right-click the (**Internet Explorer**) icon on the taskbar.
   - (Windows 10)

     Click **(Start)** > **All apps** > **Windows Accessories** > **Internet Explorer**.
   - (Windows Server 2012 and Windows Server 2012 R2)

     Click (**Internet Explorer**), and then right-click the (**Internet Explorer**) icon that appears on the taskbar.
2. Right-click **Internet Explorer**, and then click **Run as administrator**.

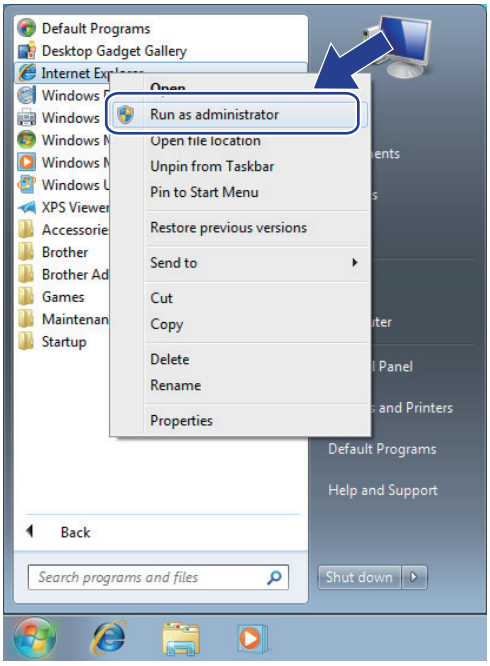

   If the **User Account Control** screen appears,
   - (Windows Vista) Click **Continue (Allow)**.
   - (Windows 7/Windows 8/Windows 10) Click **Yes**.
3. Type "https://machine's IP address" in your browser's address bar to access your machine (where "machine's IP address" is the machine's IP address or the node name that you assigned for the certificate).

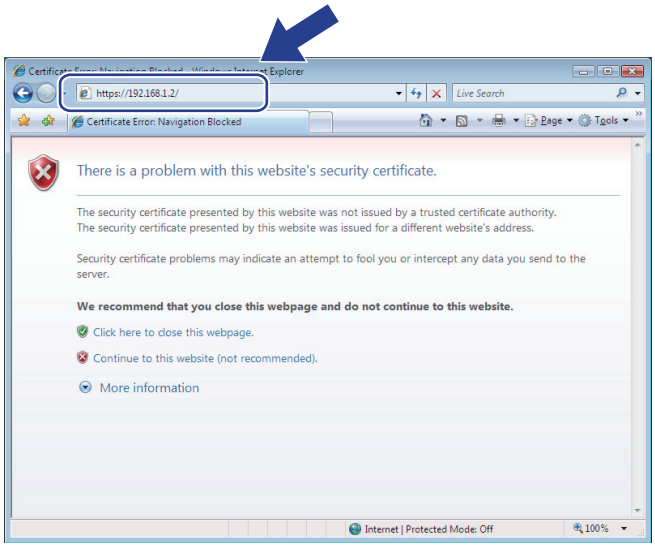

4. Click **Continue to this website (not recommended).**

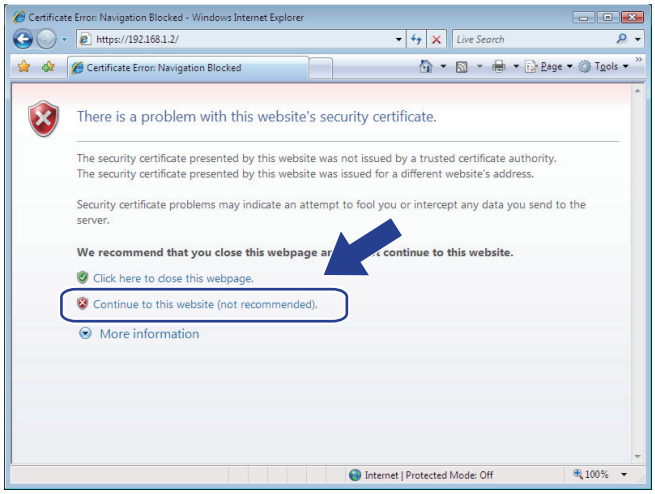

5. Click **Certificate Error**, and then click **View certificates**.

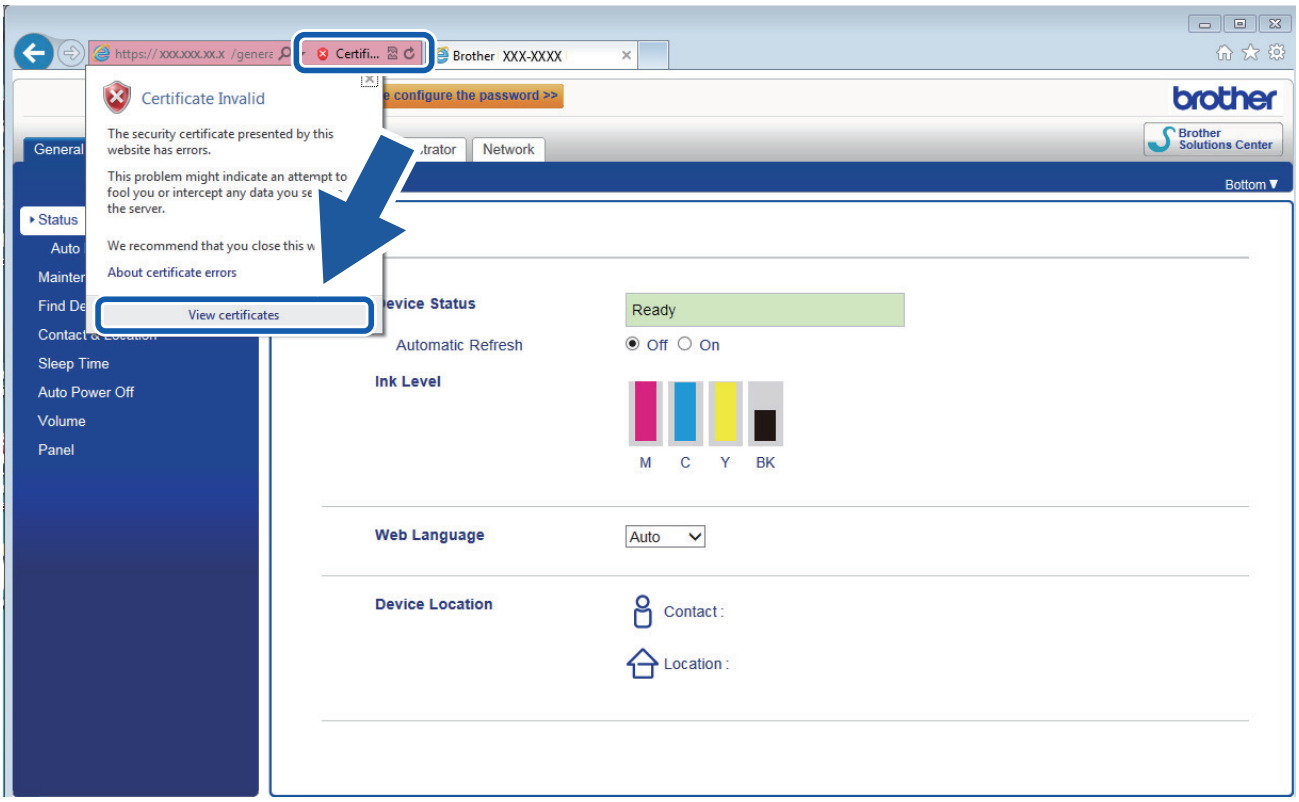

6. Click **Install Certificate…**.

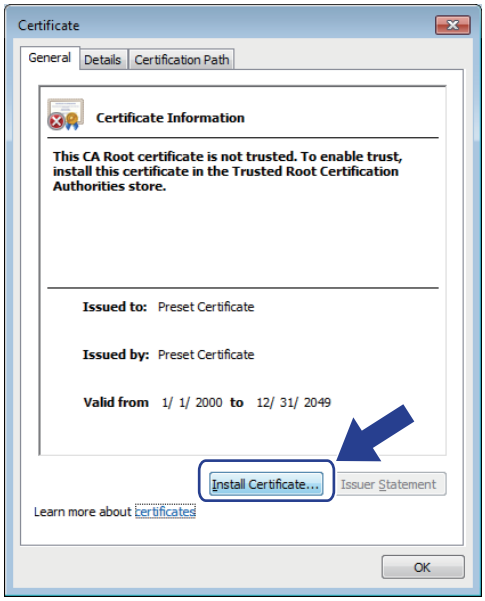

7. When the **Certificate Import Wizard** appears, click **Next**.
8. Select **Place all certificates in the following store**, and then click **Browse…**.

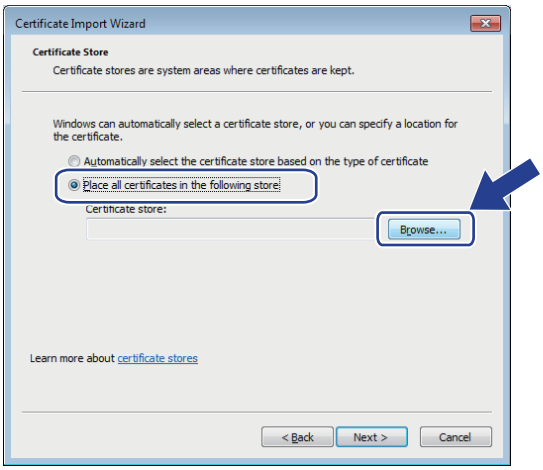

9. Select **Trusted Root Certification Authorities**, and then click **OK**.

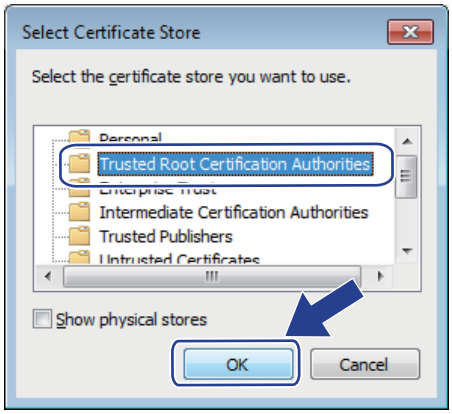

10. Click **Next**.

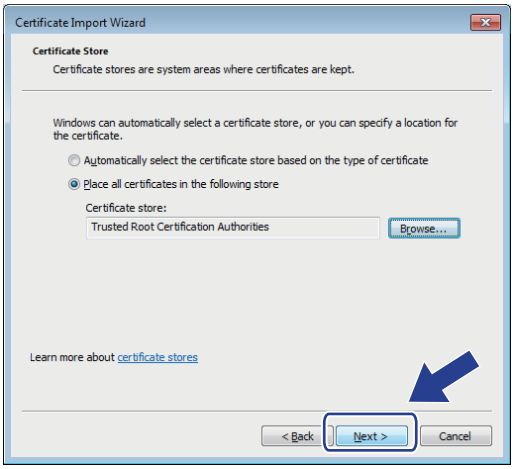

11. Click **Finish**.
12. Click **Yes**, if the fingerprint (thumbprint) is correct.

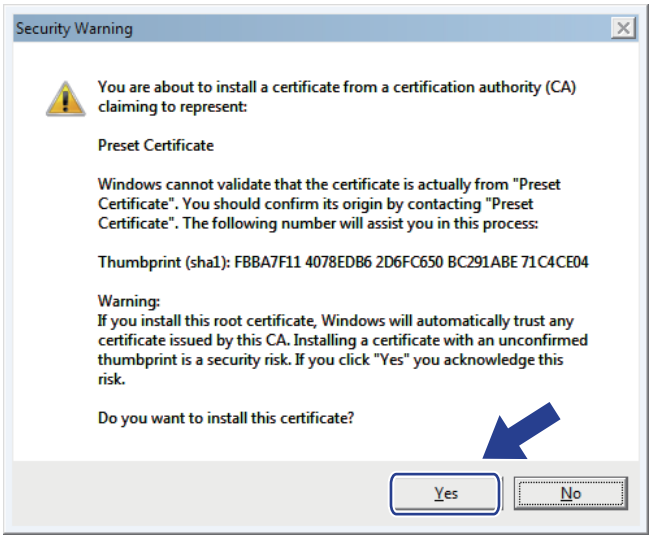

The fingerprint (thumbprint) is printed on the Network Configuration Report.

13. Click **OK**.

The self-signed certificate is now installed on your computer, and SSL/TLS communication is available.

Related Information

- Create and Install a Self-signed Certificate
- Import the Self-signed Certificate

Import and Export the Self-signed Certificate on your Brother Machine

You can store the self-signed certificates on your Brother machine and manage them by importing and exporting.

- Import the Self-signed Certificate
- Export the Self-signed Certificate

Import the Self-signed Certificate

1. Start your web browser.
2. Type "http://machine's IP address" in your browser's address bar (where "machine's IP address" is the machine's IP address).

   For example:

   http://192.168.1.2

   - If you are using a Domain Name System or enable a NetBIOS name, you can type another name, such as "SharedPrinter" instead of the IP address.
     - For example:

       http://SharedPrinter

     If you enable a NetBIOS name, you can also use the node name.
     - For example:

       http://brnxxxxxxxxxxxx

     The NetBIOS name can be found in the Network Configuration Report.
   - For Mac, access Web Based Management by clicking the machine's icon on the **Status Monitor** screen.
3. No password is required by default. Type a password if you have set one, and then click .
4. Click the **Network** tab.
5. Click the **Security** tab.
6. Click **Certificate**.
7. Click **Import Certificate and Private Key**.
8. Browse to the file you want to import.
9. Type the password if the file is encrypted, and then click **Submit**.

The self-signed certificate is imported to your machine.

To use SSL/TLS communication, the self-signed certificate must also be installed on your computer. Contact your network administrator.

Related Information

- Import and Export the Self-signed Certificate on your Brother Machine
- Install the Self-signed Certificate for Windows users with Administrator Rights

Export the Self-signed Certificate

1. Start your web browser.
2. Type "http://machine's IP address" in your browser's address bar (where "machine's IP address" is the machine's IP address).

   For example:

   http://192.168.1.2

   - If you are using a Domain Name System or enable a NetBIOS name, you can type another name, such as "SharedPrinter" instead of the IP address.
     - For example:

       http://SharedPrinter

     If you enable a NetBIOS name, you can also use the node name.
     - For example:

       http://brnxxxxxxxxxxxx

     The NetBIOS name can be found in the Network Configuration Report.
   - For Mac, access Web Based Management by clicking the machine's icon on the **Status Monitor** screen.

3. No password is required by default. Type a password if you have set one, and then click .
4. Click the **Network** tab.
5. Click the **Security** tab.
6. Click **Certificate**.
7. Click **Export** shown with **Certificate List**.
8. If you want to encrypt the file, type a password in the **Enter password** field.

   If the **Enter password** field is blank, your output file will not be encrypted.
9. Type the password again in the **Retype password** field, and then click **Submit**.
10. Click **Save**.
11. Specify the location where you want to save the file.

The self-signed certificate is exported to your computer.

You can also import the self-signed certificate to your computer.

Related Information

- Import and Export the Self-signed Certificate on your Brother Machine

Create and Install a Certificate from a Certificate Authority (CA)

If you already have a certificate from an external trusted CA, you can store the certificate and private key on the machine and manage them by importing and exporting. If you do not have a certificate from an external trusted CA, create a Certificate Signing Request (CSR), send it to a CA for authentication, and install the returned certificate on your machine.

- Create a Certificate Signing Request (CSR)
- Install a Certificate on Your Brother Machine
- Import and Export the Certificate and Private Key

Create a Certificate Signing Request (CSR)

A Certificate Signing Request (CSR) is a request sent to a Certificate Authority (CA) to authenticate the credentials contained within the certificate.

We recommend installing a Root Certificate from the CA on your computer before creating the CSR.

1. Start your web browser.
2. Type "http://machine's IP address" in your browser's address bar (where "machine's IP address" is the machine's IP address).

   For example:

   http://192.168.1.2

   - If you are using a Domain Name System or enable a NetBIOS name, you can type another name, such as "SharedPrinter" instead of the IP address.
     - For example:

       http://SharedPrinter

     If you enable a NetBIOS name, you can also use the node name.
     - For example:

       http://brnxxxxxxxxxxxx

     The NetBIOS name can be found in the Network Configuration Report.
   - For Mac, access Web Based Management by clicking the machine's icon on the **Status Monitor** screen.

3. No password is required by default. Type a password if you have set one, and then click .
4. Click the **Network** tab.
5. Click the **Security** tab.
6. Click **Certificate**.
7. Click **Create CSR**.
8. Type a **Common Name** (required) and add other information about your **Organization** (optional).

   - Your company details are required so that a CA can confirm your identity and verify it to the outside world.
   - The length of the **Common Name** must be less than 64 bytes. Enter an identifier, such as an IP address, node name, or domain name to use when accessing this printer through SSL/TLS communication. The node name is displayed by default. The **Common Name** is required.
   - A warning will appear if you type a different name in the URL than the Common Name that was used for the certificate.
   - The length of the **Organization**, the **Organization Unit**, the **City/Locality** and the **State/Province** must be less than 64 bytes.
   - The **Country/Region** should be a two character ISO 3166 country code.
   - If you are configuring an X.509v3 certificate extension, select the **Configure extended partition** check box, and then select **Auto (Register IPv4)** or **Manual**.

9. Select your setting from the **Public Key Algorithm** drop-down list. The default setting is **RSA(2048bit)**.
10. Select your setting from the **Digest Algorithm** drop-down list. The default setting is **SHA256**.
11. Click **Submit**.

    The CSR appears on your screen. Save the CSR as a file or copy and paste it into an online CSR form offered by a Certificate Authority.

12. Click **Save**.

- Follow your CA's policy regarding the method to send a CSR to your CA.
- If you are using the Enterprise root CA of Windows Server 2008/2012/2012 R2, we recommend using the Web Server for the certificate template to securely create the Client Certificate. If you are creating a Client Certificate for an IEEE 802.1x environment with EAP-TLS authentication, we recommend using User for the certificate template. For more information, go to your model's page on the Brother Solutions Center at support.brother.com.

Related Information

- Create and Install a Certificate from a Certificate Authority (CA)

Install a Certificate on Your Brother Machine

When you receive a certificate from a CA, follow the steps below to install it into the print server:

> Only a certificate issued with your machine's CSR can be installed onto the machine. When you want to create another CSR, make sure that the certificate is installed before creating another CSR. Create another CSR only after installing the certificate on the machine. If you do not, the CSR you create before installing will be invalid.

1. Start your web browser.
2. Type "http://machine's IP address" in your browser's address bar (where "machine's IP address" is the machine's IP address).

   For example:

   http://192.168.1.2

   - If you are using a Domain Name System or enable a NetBIOS name, you can type another name, such as "SharedPrinter" instead of the IP address.
     - For example:

       http://SharedPrinter

     If you enable a NetBIOS name, you can also use the node name.
     - For example:

       http://brnxxxxxxxxxxxx

     The NetBIOS name can be found in the Network Configuration Report.
   - For Mac, access Web Based Management by clicking the machine's icon on the **Status Monitor** screen.

3. No password is required by default. Type a password if you have set one, and then click .
4. Click the **Network** tab.
5. Click the **Security** tab.
6. Click **Certificate**.
7. Click **Install Certificate**.
8. Browse to the file that contains the certificate issued by the CA, and then click **Submit**.

   The certificate has been created successfully and saved in your machine's memory successfully.

To use SSL/TLS communication, the Root Certificate from the CA must be installed on your computer. Contact your network administrator.

Related Information

- Create and Install a Certificate from a Certificate Authority (CA)

Import and Export the Certificate and Private Key

Store the certificate and private key on your machine and manage them by importing and exporting them.

- Import a Certificate and Private Key
- Export the Certificate and Private Key

Import a Certificate and Private Key

1. Start your web browser.
2. Type "http://machine's IP address" in your browser's address bar (where "machine's IP address" is the machine's IP address).

   For example:

   http://192.168.1.2

- If you are using a Domain Name System or enable a NetBIOS name, you can type another name, such as "SharedPrinter" instead of the IP address.
  - For example:

    http://SharedPrinter

  If you enable a NetBIOS name, you can also use the node name.
  - For example:

    http://brnxxxxxxxxxxxx

  The NetBIOS name can be found in the Network Configuration Report.
- For Mac, access Web Based Management by clicking the machine's icon on the **Status Monitor** screen.

3. No password is required by default. Type a password if you have set one, and then click .
4. Click the **Network** tab.
5. Click the **Security** tab.
6. Click **Certificate**.
7. Click **Import Certificate and Private Key**.
8. Browse to the file you want to import.
9. Type the password if the file is encrypted, and then click **Submit**.

The certificate and private key are imported to your machine.

To use SSL/TLS communication, the Root Certificate from the CA must also be installed on your computer. Contact your network administrator.

Related Information

- Import and Export the Certificate and Private Key

Export the Certificate and Private Key

1. Start your web browser.
2. Type "http://machine's IP address" in your browser's address bar (where "machine's IP address" is the machine's IP address).

   For example:

   http://192.168.1.2

   - If you are using a Domain Name System or enable a NetBIOS name, you can type another name, such as "SharedPrinter" instead of the IP address.
     - For example:

       http://SharedPrinter

     If you enable a NetBIOS name, you can also use the node name.
     - For example:

       http://brnxxxxxxxxxxxx

     The NetBIOS name can be found in the Network Configuration Report.
   - For Mac, access Web Based Management by clicking the machine's icon on the **Status Monitor** screen.

3. No password is required by default. Type a password if you have set one, and then click .
4. Click the **Network** tab.
5. Click the **Security** tab.
6. Click **Certificate**.
7. Click **Export** shown with **Certificate List**.
8. Enter the password if you want to encrypt the file.

   If a blank password is used, the output is not encrypted.
9. Enter the password again for confirmation, and then click **Submit**.
10. Click **Save**.
11. Specify the location where you want to save the file.

The certificate and private key are exported to your computer.

You can also import the certificate to your computer.

Related Information

- Import and Export the Certificate and Private Key

Import and Export a CA Certificate

You can import, export and store CA certificates on your Brother machine.

- Import a CA Certificate
- Export a CA Certificate

Import a CA Certificate

1. Start your web browser.
2. Type "http://machine's IP address" in your browser's address bar (where "machine's IP address" is the machine's IP address).

   For example:

   http://192.168.1.2

   - If you are using a Domain Name System or enable a NetBIOS name, you can type another name, such as "SharedPrinter" instead of the IP address.
     - For example:

       http://SharedPrinter

     If you enable a NetBIOS name, you can also use the node name.
     - For example:

       http://brnxxxxxxxxxxxx

     The NetBIOS name can be found in the Network Configuration Report.
   - For Mac, access Web Based Management by clicking the machine's icon on the **Status Monitor** screen.

3. No password is required by default. Type a password if you have set one, and then click .
4. Click the **Network** tab.
5. Click the **Security** tab.
6. Click **CA Certificate**.
7. Click **Import CA Certificate**.
8. Browse to the file you want to import.
9. Click **Submit**.

Related Information

- Import and Export a CA Certificate

Export a CA Certificate

1. Start your web browser.
2. Type "http://machine's IP address" in your browser's address bar (where "machine's IP address" is the machine's IP address).

   For example:

   http://192.168.1.2

   - If you are using a Domain Name System or enable a NetBIOS name, you can type another name, such as "SharedPrinter" instead of the IP address.
     - For example:

       http://SharedPrinter

     If you enable a NetBIOS name, you can also use the node name.
     - For example:

       http://brnxxxxxxxxxxxx

     The NetBIOS name can be found in the Network Configuration Report.
   - For Mac, access Web Based Management by clicking the machine's icon on the **Status Monitor** screen.

3. No password is required by default. Type a password if you have set one, and then click .
4. Click the **Network** tab.
5. Click the **Security** tab.
6. Click **CA Certificate**.
7. Select the certificate you want to export and click **Export**.
8. Click **Submit**.
9. Click **Save**.
10. Specify where on your computer you want to save the exported certificate, and save it.

Related Information

- Import and Export a CA Certificate

Manage Multiple Certificates

The multiple certificate feature allows you to use Web Based Management to manage each certificate installed on your machine. In Web Based Management, navigate to the **Certificate** or **CA Certificate** screen to view certificate content, delete, or export your certificates.

	Maximum Number of Certificates Stored UP on Brother Machine
Self-signed Certificate or Certificate Issued by a CA	5
CA Certificate	6

We recommend storing one less certificate than allowed, reserving an empty spot in case of certificate expiration. When a certificate expires, import a new certificate into the reserved spot, and then delete the expired certificate. This ensures that you avoid configuration failure.

- When you use HTTPS/IPPS, IEEE 802.1x, or Signed PDF, you must select which certificate you are using.
- When you use SSL for SMTP/POP3/IMAP4 communications (only available for certain models), you do not have to choose the certificate. The necessary certificate will be chosen automatically.

Related Information

- Certificates and Web Based Management

Send or Receive an Email Securely

- Configure Email Sending or Receiving Using Web Based Management
- Send an Email with User Authentication
- Send or Receive an Email Securely Using SSL TLS

Configure Email Sending or Receiving Using Web Based Management

We recommend using Web Based Management to configure secured email sending with user authentication, or email sending and receiving using SSL/TLS.

1. Start your web browser.
2. Type "http://machine's IP address" in your browser's address bar (where "machine's IP address" is the machine's IP address).

   For example:

   http://192.168.1.2
3. No password is required by default. Type a password if you have set one, and then click .
4. Click the **Network** tab.
5. Click the **Protocol** menu in the left navigation bar.
6. In the **POP3/IMAP4/SMTP** field, click **Advanced Settings** and make sure the status of **POP3/IMAP4/SMTP** is **Enabled**.
7. Configure the **POP3/IMAP4/SMTP** settings.
   - Confirm that the email settings are correct after configuration by sending a test email.
   - If you do not know the POP3/IMAP4/SMTP server settings, contact your network administrator or Internet Service Provider (ISP).
8. When finished, click **Submit**.

   The **Test Send/Receive E-mail Configuration** dialog box appears.
9. Follow the instructions in the dialog box to test the current settings.

Related Information

- Send or Receive an Email Securely
- Send or Receive an Email Securely Using SSL TLS

Send an Email with User Authentication

Your Brother machine supports the SMTP-AUTH method to send email via an email server that requires user authentication. This method prevents unauthorised users from accessing the email server.

You can use SMTP-AUTH for email notification, email reports and I-Fax.

We recommend using Web Based Management to configure the SMTP authentication.

Email Server Settings

You must configure your machine's SMTP authentication method to match the method used by your email server. For details about your email server settings, contact your network administrator or Internet Service Provider (ISP).

To enable SMTP server authentication: in the Web Based Management **POP3/IMAP4/SMTP** screen, under **Server Authentication Method**, you must select **SMTP-AUTH**.

Related Information

- Send or Receive an Email Securely

Send or Receive an Email Securely Using SSL TLS

Your Brother machine supports SSL/TLS methods to send or receive an email via an email server that requires secure SSL/TLS communication. To send or receive email via an email server that is using SSL/TLS communication, you must configure SMTP over SSL/TLS, POP3 over SSL/TLS, or IMAP4 over SSL/TLS.

We recommend using Web Based Management to configure SSL/TLS.

Verify Server Certificate

Under **SSL/TLS**, if you choose **SSL** or **TLS**, the **Verify Server Certificate** check box will be selected automatically.

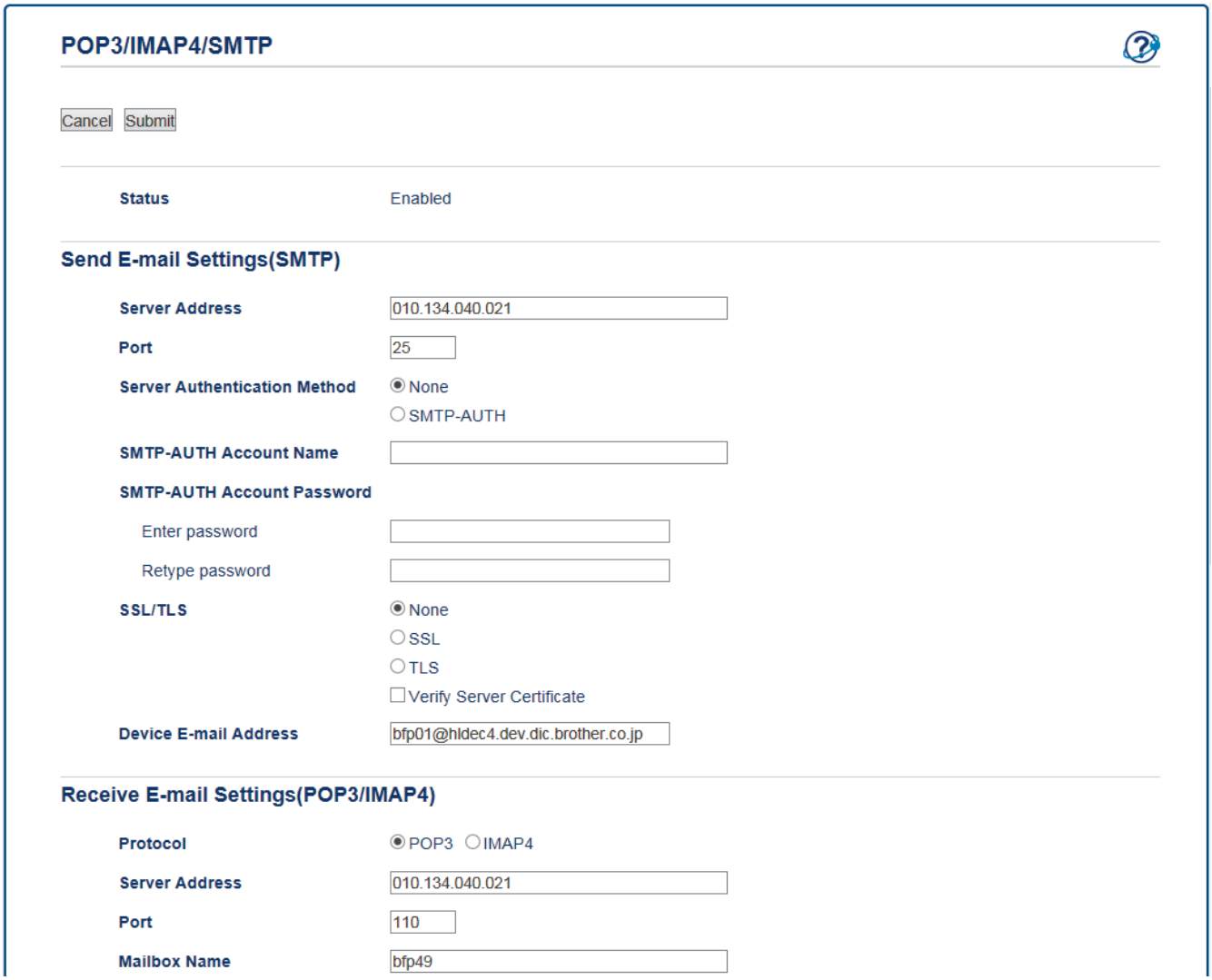

- Before you verify the server certificate, you must import the CA certificate issued by the CA that signed the server certificate. Contact your network administrator or your Internet Service Provider (ISP) to confirm if importing a CA certificate is necessary.
- If you do not need to verify the server certificate, clear the **Verify Server Certificate** check box.

Port Number

If you select **SSL** or **TLS** for SMTP, POP3, or IMAP4, the **Port** value will be changed to match the protocol. To change the port number manually, type the port number after you choose **SSL** or **TLS** for the **SSL/TLS** settings.

You must configure your machine's POP3/IMAP4/SMTP communication method to match the method used by your email server. For details about your email server settings, contact your network administrator or your ISP.

In most cases, the secured webmail services require the following settings:

SMTP	**Port**	25
	Server Authentication Method	**SMTP-AUTH**
	SSL/TLS	**TLS**
POP3	**Port**	995
	SSL/TLS	**SSL**
IMAP4	**Port**	993
	SSL/TLS	**SSL**

Related Information

- Send or Receive an Email Securely
- Configure Email Sending or Receiving Using Web Based Management

Use IEEE 802.1x Authentication for a Wired or a Wireless Network

- What Is IEEE 802.1x Authentication?
- Configure IEEE 802.1x Authentication for a Wired or a Wireless Network Using Web Based Management (Web Browser)
- IEEE 802.1x Authentication Methods

What Is IEEE 802.1x Authentication?

IEEE 802.1x is an IEEE standard for wired and wireless networks that limits access from unauthorised network devices. Your Brother machine (supplicant) sends an authentication request to a RADIUS server (Authentication server) through your access point or HUB. After your request has been verified by the RADIUS server, your machine can access the network.

Related Information

- Use IEEE 802.1x Authentication for a Wired or a Wireless Network

Configure IEEE 802.1x Authentication for a Wired or a Wireless Network Using Web Based Management (Web Browser)

- If you configure your machine using EAP-TLS authentication, you must install the client certificate issued by a CA before you start configuration. Contact your network administrator about the client certificate. If you have installed more than one certificate, we recommend writing down the certificate name you want to use.
- Before you verify the server certificate, you must import the CA certificate that has been issued by the CA that signed the server certificate. Contact your network administrator or your Internet Service Provider (ISP) to confirm whether a CA certificate import is necessary.

You can also configure IEEE 802.1x authentication using:

- BRAdmin Professional (Wired and wireless network)
- Wireless setup wizard from the control panel (Wireless network)
- Wireless setup wizard on the CD-ROM (Wireless network)

1. Start your web browser.
2. Type "http://machine's IP address" in your browser's address bar (where "machine's IP address" is the machine's IP address).

   For example:

   http://192.168.1.2

   - If you are using a Domain Name System or enable a NetBIOS name, you can type another name, such as "SharedPrinter" instead of the IP address.
     - For example:

       http://SharedPrinter

     If you enable a NetBIOS name, you can also use the node name.
     - For example:

       http://brnxxxxxxxxxxxx

     The NetBIOS name can be found in the Network Configuration Report.
   - For Mac, access Web Based Management by clicking the machine's icon on the **Status Monitor** screen.
3. No password is required by default. Type a password if you have set one, and then click .
4. Click the **Network** tab.
5. Do one of the following:

Option	Description
Wired network	Click the **Wired** tab, and then select **Wired 802.1x Authentication** in the left navigation bar.
Wireless network	Click the **Wireless** tab, and then select **Wireless (Enterprise)** in the left navigation bar.

6. Configure the IEEE 802.1x authentication settings.

- To enable IEEE 802.1x authentication for wired networks, select **Enabled** for **Wired 802.1x status** on the **Wired 802.1x Authentication** page.
- If you are using **EAP-TLS** authentication, you must select the client certificate that has been installed (shown with certificate name) for verification from the **Client Certificate** drop-down list.
- If you select **EAP-FAST**, **PEAP**, **EAP-TTLS**, or **EAP-TLS** authentication, select the verification method from the **Server Certificate Verification** drop-down list. Verify the server certificate using the CA certificate, imported to the machine in advance, that has been issued by the CA that signed the server certificate.

Select one of the following verification methods from the **Server Certificate Verification** drop-down list:

Option	Description
No Verification	The server certificate can always be trusted. The verification is not performed.
CA Cert.	The verification method to check the CA reliability of the server certificate, using the CA certificate that has been issued by the CA that signed the server certificate.
CA Cert. + ServerID	The verification method to check the common name [1] value of the server certificate, in addition to the CA reliability of the server certificate.

7. When finished with configuration, click **Submit**.

   For wired networks: After configuring, connect your machine to the IEEE 802.1x supported network. After a few minutes, print the Network Configuration Report to check the <**Wired IEEE 802.1x**> Status.

Option	Description
Success	The wired IEEE 802.1x function is enabled and the authentication was successful.
Failed	The wired IEEE 802.1x function is enabled; however, the authentication failed.
Off	The wired IEEE 802.1x function is not available.

Related Information

- Use IEEE 802.1x Authentication for a Wired or a Wireless Network
- Print the Network Configuration Report
- Print the WLAN Report
- Supported Security Certificate Features

1 The common name verification compares the common name of the server certificate to the character string configured for the **Server ID**. Before you use this method, contact your system administrator about the server certificate's common name and then configure **Server ID**.

IEEE 802.1x Authentication Methods

LEAP (Wireless network)

Lightweight Extensible Authentication Protocol (LEAP) is a proprietary EAP method developed by Cisco Systems, Inc., which uses a user ID and password for authentication.

EAP-FAST

Extensible Authentication Protocol-Flexible Authentication via Secured Tunneling (EAP-FAST) has been developed by Cisco Systems, Inc., which uses a user ID and password for authentication, and symmetric key algorithms to achieve a tunnelled authentication process.

The Brother machine supports the following inner authentication methods:

- EAP-FAST/NONE
- EAP-FAST/MS-CHAPv2
- EAP-FAST/GTC

EAP-MD5 (Wired network)

Extensible Authentication Protocol-Message Digest Algorithm 5 (EAP-MD5) uses a user ID and password for challenge-response authentication.

PEAP

Protected Extensible Authentication Protocol (PEAP) is a version of EAP method developed by Cisco Systems, Inc., Microsoft Corporation and RSA Security. PEAP creates an encrypted Secure Sockets Layer (SSL)/Transport Layer Security (TLS) tunnel between a client and an authentication server, for sending a user ID and password. PEAP provides mutual authentication between the server and the client.

The Brother machine supports the following inner authentications:

- PEAP/MS-CHAPv2
- PEAP/GTC

EAP-TTLS

Extensible Authentication Protocol-Tunneled Transport Layer Security (EAP-TTLS) has been developed by Funk Software and Certicom. EAP-TTLS creates a similar encrypted SSL tunnel to PEAP, between a client and an authentication server, for sending a user ID and password. EAP-TTLS provides mutual authentication between the server and the client.

The Brother machine supports the following inner authentications:

- EAP-TTLS/CHAP
- EAP-TTLS/MS-CHAP
- EAP-TTLS/MS-CHAPv2
- EAP-TTLS/PAP

EAP-TLS

Extensible Authentication Protocol-Transport Layer Security (EAP-TLS) requires digital certificate authentication both at a client and an authentication server.

Related Information

- Use IEEE 802.1x Authentication for a Wired or a Wireless Network

Mobile/Web Connect

- Brother Web Connect
- AirPrint
- Mobile Printing for Windows
- Mopria® Print Service
- Brother iPrint&Scan
- Near-Field Communication (NFC)

Brother Web Connect

- Brother Web Connect Overview
- Online Services Used with Brother Web Connect
- Conditions for Using Brother Web Connect
- Set Up Brother Web Connect
- Scan and Upload Documents Using Brother Web Connect
- Upload a Document from an External Memory Device Using Brother Web Connect
- Download and Print Documents Using Brother Web Connect
- Download and Save a Document to an External Memory Device Using Brother Web Connect
- FaxForward to Cloud or E-mail

Brother Web Connect Overview

Press (Web) or (Apps) on the touchscreen to use Brother Web Connect.

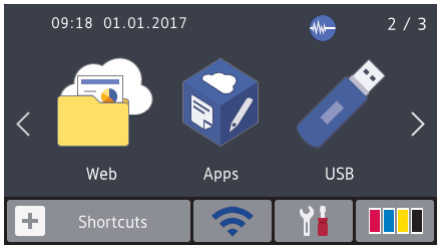

Certain websites provide services that allow users to upload and view images and files on the website. Your Brother machine can scan images and upload them to these services, and also download from and print images that are already uploaded to these services.

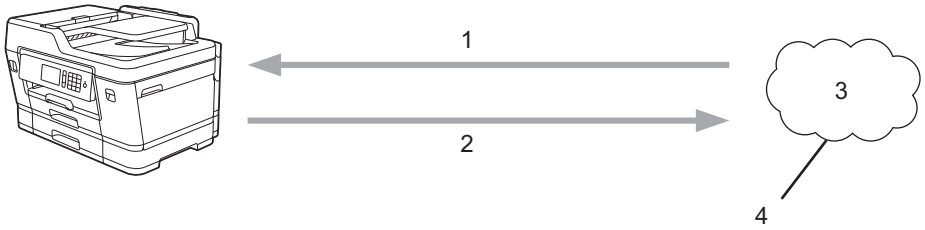

1. Printing
2. Scanning
3. Photos, images, documents and other files
4. Web Service

To use Brother Web Connect, your Brother machine must be connected to a network that has access to the Internet, through either a wired or wireless connection.

For network setups that use a proxy server, the machine must also be configured to use a proxy server. If you are unsure of your network configuration, check with your network administrator.

A proxy server is a computer that serves as an intermediary between computers without a direct Internet connection, and the Internet.

Related Information

- Brother Web Connect

Online Services Used with Brother Web Connect

Use Brother Web Connect to access online services from your Brother machine. Some of these web services offer business versions.

To use Brother Web Connect, you must have an account with the online service you want to use. If you do not already have an account, use a computer to access the service's website and create an account.

Evernote®

An online file storage and management service.

URL: www.evernote.com

Dropbox

An online file storage, sharing and synchronisation service.

URL: www.dropbox.com

Box

An online document editing and sharing service.

URL: www.box.com

For more information about any of these services, refer to the respective service's website.

The following table describes which file types can be used with each Brother Web Connect feature:

Accessible Services	Evernote® Dropbox Box
Download and print images or save them to media	JPEG PDF DOC DOCX XLS XLSX PPT PPTX
Upload scanned images	JPEG PDF DOCX XLSX PPTX
Upload images saved on media	JPEG
FaxForward to the online services (available only for certain countries)	PDF JPEG TIFF

- Not all services are available in all countries.
- Brother Web Connect supports only file names written in English. Files named in the local language will not be downloaded.

Related Information

- Brother Web Connect

Conditions for Using Brother Web Connect

- Brother Software Installation for Using Brother Web Connect
- Configure the Proxy Server Settings Using the Machine's Control Panel
- Configure the Proxy Server Settings Using Web Based Management

Brother Software Installation for Using Brother Web Connect

The initial installation of Brother Web Connect requires a computer that has access to the Internet and has the Brother machine's software installed.

For Windows:

To install the Brother Software and configure the machine to be able to print over your wired or wireless network, see the *Quick Setup Guide* included with your Brother machine.

For Mac:

To install the Brother Software, go to your model's **Downloads** page on the Brother Solutions Center at support.brother.com.

Related Information

- Conditions for Using Brother Web Connect

Configure the Proxy Server Settings Using the Machine's Control Panel

If your network uses a proxy server, the following proxy server information must be configured on the machine:

- Proxy server address
- Port number
- User Name
- Password

>> MFC-J3530DW
>> MFC-J3930DW

MFC-J3530DW

1. Press [Settings] > [All Settings] > [Network] > [Web Connect Settings] > [Proxy Settings] > [Proxy Connection].
2. Press [On].
3. Press the option that you want to set, and then enter the proxy server information.
   Press [OK].
4. Press .

MFC-J3930DW

1. Press [Settings] > [All Settings] > [Network] > [Web Connect Settings] > [Proxy Settings] > [Proxy Connection].
2. Press [On].
3. Press the option that you want to set, and then enter the proxy server information.
   Press [OK].
4. Press .

Related Information

- Conditions for Using Brother Web Connect

Configure the Proxy Server Settings Using Web Based Management

If your network uses a proxy server, the following proxy server information must be configured using Web Based Management:

- Proxy server address
- Port number
- User Name
- Password

We recommend Microsoft Internet Explorer 8/11 for Windows and Safari 9 for Mac. Make sure that JavaScript and Cookies are always enabled in whichever browser you use. If you use different web browser, make sure it is compatible with HTTP 1.0 and HTTP 1.1.

1. Start your web browser.
2. Type "http://machine's IP address" in your browser's address bar (where "machine's IP address" is the machine's IP address).

   For example:

   http://192.168.1.2
3. No password is required by default. Type a password if you have set one, and then click .
4. Click the **Network** tab.
5. Click the **Protocol** menu in the left navigation bar.
6. Make sure the **Proxy** check box is selected, and then click **Submit**.
7. In the **Proxy** field, click **Advanced Settings**.
8. Enter the proxy server information.
9. Click **Submit**.

Related Information

- Conditions for Using Brother Web Connect

Set Up Brother Web Connect

- Brother Web Connect Setup Overview
- Create an Account for Each Online Service Before Using Brother Web Connect
- Apply for Brother Web Connect Access
- Register an Account on Your Brother Machine for Brother Web Connect

Brother Web Connect Setup Overview

Configure the Brother Web Connect settings using the following procedure:

Step 1: Create an account with the service you want to use.

Access the service's website using a computer and create an account. (If you already have an account, there is no need to create an additional account.)

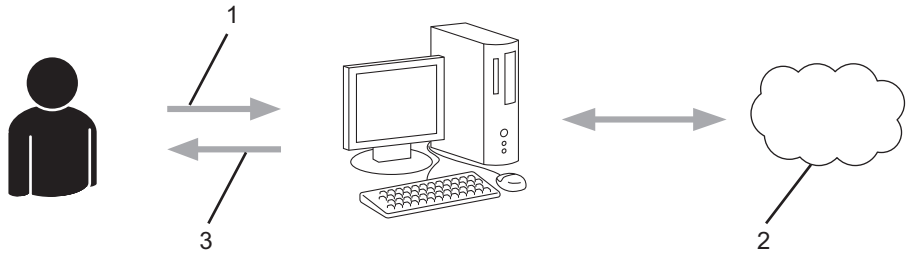

1. User registration
2. Web Service
3. Obtain account

Step 2: Apply for Brother Web Connect access.

Start Brother Web Connect access using a computer and obtain a temporary ID.

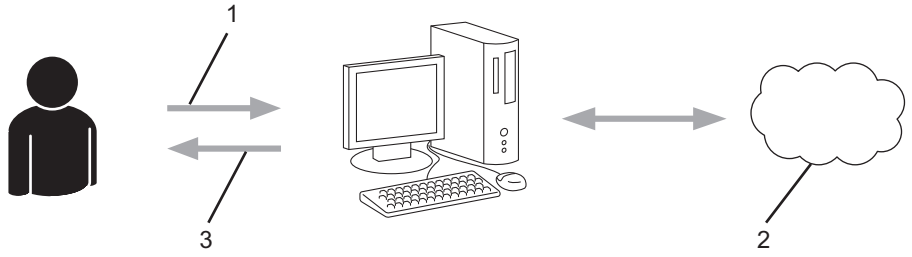

1. Enter account information
2. Brother Web Connect application page
3. Obtain temporary ID

Step 3: Register your account information on your machine so you can access the service you want to use.

Enter the temporary ID to enable the service on your machine. Specify the account name as you would like it to be displayed on the machine, and enter a PIN if you would like to use one.

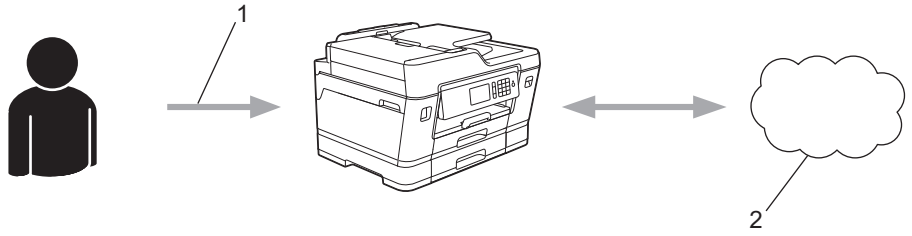

1. Enter temporary ID
2. Web Service

Your Brother machine can now use the service.

Related Information

- Set Up Brother Web Connect

Create an Account for Each Online Service Before Using Brother Web Connect

To use Brother Web Connect to access an online service, you must have an account with that online service. If you do not already have an account, use a computer to access the service's website and create an account. After creating an account, log on and use the account once with a computer before using the Brother Web Connect feature. Otherwise, you may not be able to access the service using Brother Web Connect.

If you already have an account, there is no need to create an additional account.

After you finish creating an account with the online service you want to use, apply for Brother Web Connect access.

You do not need to create an account if you use the service as a guest. You can use only certain services as a guest. If the service you want to use does not have a guest-user option, you must create an account.

Related Information

- Set Up Brother Web Connect

Apply for Brother Web Connect Access

To use Brother Web Connect to access online services, you must first apply for Brother Web Connect access using a computer that has the Brother Software installed.

1. Access the Brother Web Connect application website:

Option	Description
Windows Vista Windows 7	Click **(Start)** > **All Programs** > **Brother** > **Brother Utilities**, and then click the drop-down list and select your model name (if not already selected). Click **Do More** in the left navigation bar, and then click **Brother Web Connect**.
Windows 8 Windows 10	Launch (**Brother Utilities**), and then click the drop-down list and select your model name (if not already selected). Click **Do More** in the left navigation bar, and then click **Brother Web Connect**.
Windows 8.1	Move your mouse to the lower left corner of the **Start** screen and click (if you are using a touch-based device, swipe up from the bottom of the **Start** screen to bring up the **Apps** screen). Click (**Brother Utilities**), and then click the drop-down list and select your model name (if not already selected). Click **Do More** in the left navigation bar, and then click **Brother Web Connect**.
Mac	Click **Go** in the **Finder** bar, **Applications** > **Brother** > **Utilities** > **Brother Web Connect**.

You can also access the website directly:

Type bwc.brother.com into your web browser's address bar.

The Brother Web Connect page launches.

The first time you launch Brother Web Connect, you must select your country, language, and model name, and then click Next to move to the next step, selecting the service you want.

2. Select the service you want to use.

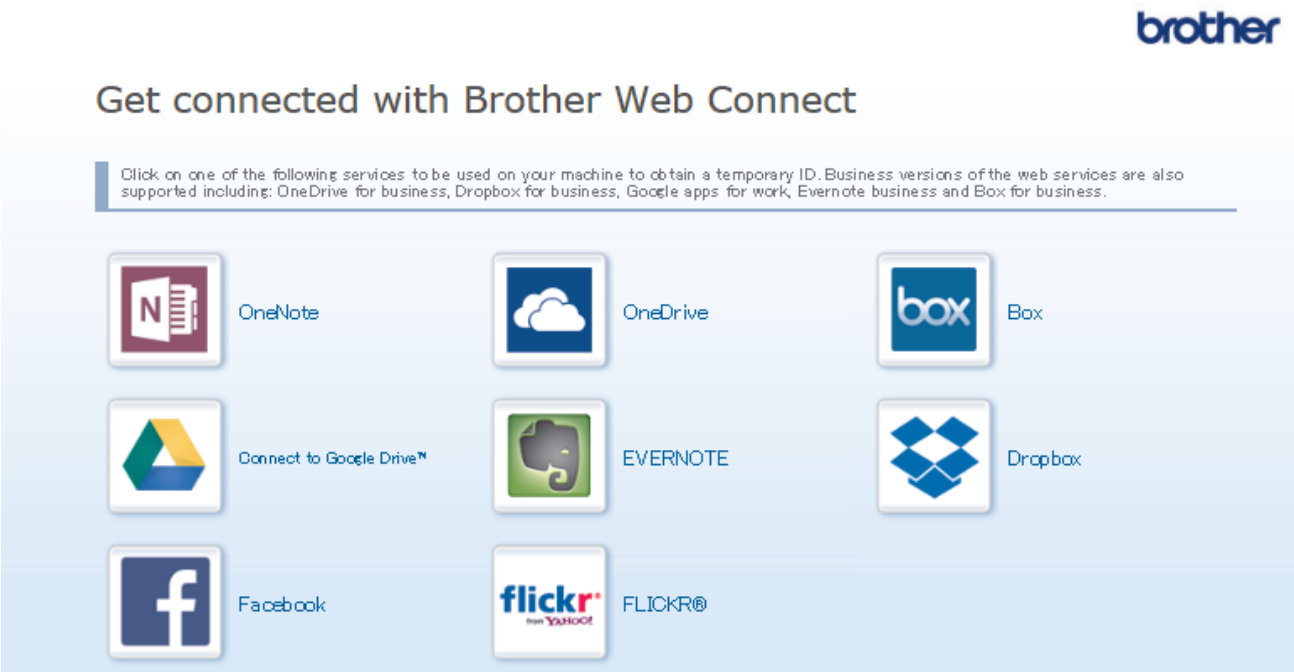

The actual screen may differ from the screen shown above.

3. Follow the on-screen instructions and apply for access.

   When finished, your temporary ID will appear.

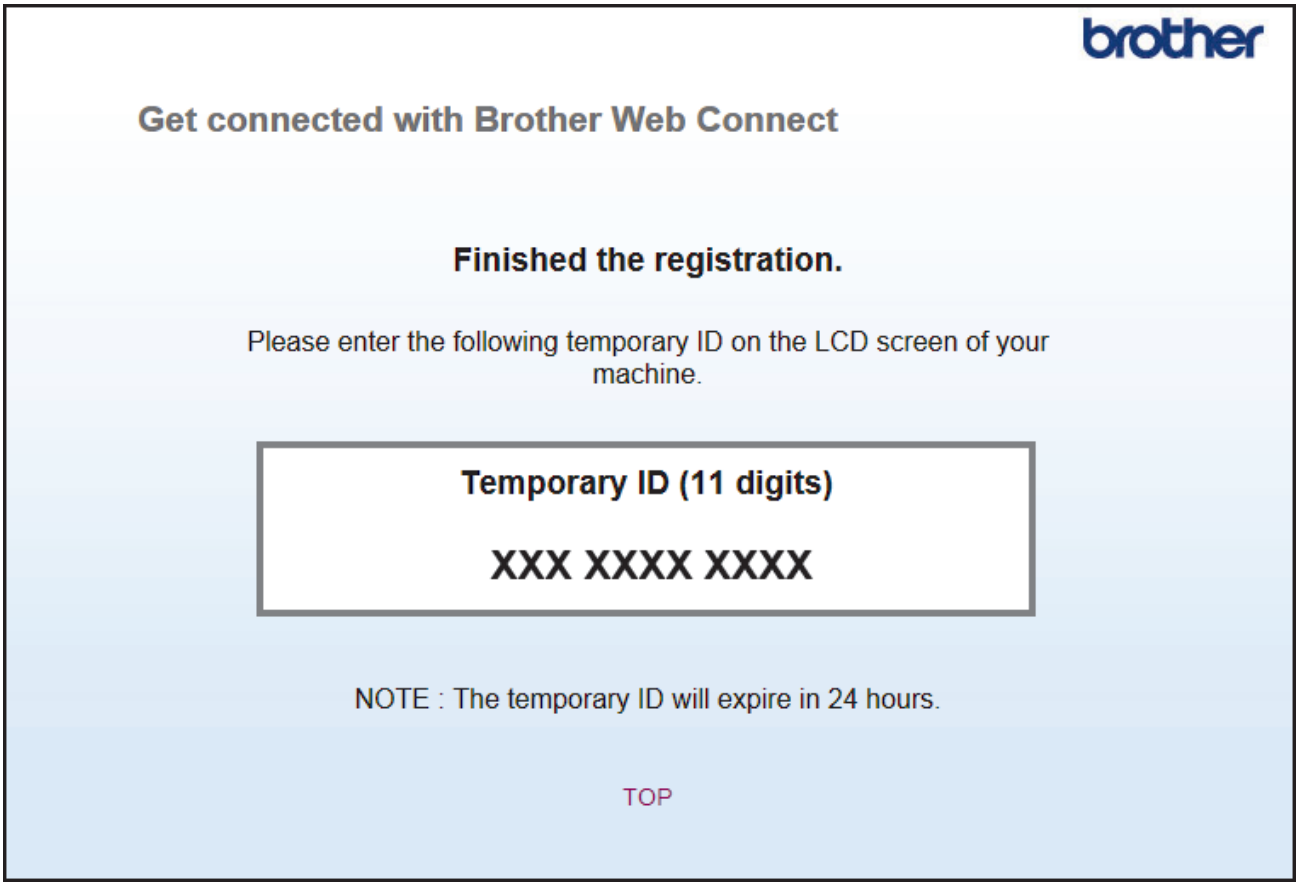

4. Make a note of your temporary ID, as you will need it to register accounts to the machine. The temporary ID is valid for 24 hours.
5. Close the web browser.

Now that you have a Brother Web Connect access ID, you must register this ID on your machine, and then use your machine to access the web service you want to use.

Related Information

- Set Up Brother Web Connect

Register an Account on Your Brother Machine for Brother Web Connect

You must enter your Brother Web Connect account information and configure your machine so that it can use Brother Web Connect to access the service you want.

- You must apply for Brother Web Connect access to register an account on your machine.
- Before you register an account, confirm that the correct date and time are set on the machine's control panel.

>> MFC-J3530DW
>> MFC-J3930DW

MFC-J3530DW

1. Press ◀ or ▶ to display [Web].

   Press [Web].

   - If information regarding the Internet connection appears on the machine's LCD, read the information and press [OK].
   - Occasionally, updates or announcements about Brother Web Connect's features will appear on the LCD. Read the information, and then press [OK].

2. Press ▲ or ▼ to display the service with which you want to register.

   Press the service name.

3. If information regarding Brother Web Connect appears, press [OK].
4. Press [Register/Delete Account] > [Register Account].
5. The machine will prompt you to enter the temporary ID you received when you applied for Brother Web Connect access.

   Press [OK].

6. Enter the temporary ID using the LCD, and then press [OK].

   An error message will appear on the LCD if the information you entered does not match the temporary ID you received when you applied for access, or if the temporary ID has expired. Either enter the temporary ID correctly, or apply for access again and receive a new temporary ID.

7. The machine will prompt you to enter the account name that you want to be displayed on the LCD.

   Press [OK].

8. Enter the name using the LCD, and then press [OK].
9. Do one of the following:
   - To set a PIN for the account, press [Yes]. (A PIN prevents unauthorized access to the account.) Enter a four-digit number, and then press [OK].
   - If you do not want to set a PIN, press [No].

   When the account information you entered appears, confirm that it is correct.

10. Press [Yes] to register your information as entered.
11. Press [OK].

    Account registration is complete and your machine can now access the service.

12. Press .

MFC-J3930DW

1. Swipe left or right or press ◀ or ▶ to display [Web].

   Press [Web].

   - If information regarding the Internet connection appears on the machine's LCD, read the information and press [OK].
   - Occasionally, updates or announcements about Brother Web Connect's features will appear on the LCD. Read the information, and then press [OK].

2. Swipe left or right or press ◀ or ▶ to display the service with which you want to register.

   Press the service name.

3. If information regarding Brother Web Connect appears, press [OK].
4. Press [Register/Delete Account] > [Register Account].
5. The machine will prompt you to enter the temporary ID you received when you applied for Brother Web Connect access.

   Press [OK].

6. Enter the temporary ID using the LCD, and then press [OK].

   An error message will appear on the LCD if the information you entered does not match the temporary ID you received when you applied for access, or if the temporary ID has expired. Either enter the temporary ID correctly, or apply for access again and receive a new temporary ID.

7. The machine will prompt you to enter the account name that you want to be displayed on the LCD.

   Press [OK].

8. Enter the name using the LCD, and then press [OK].
9. Do one of the following:
   - To set a PIN for the account, press [Yes]. (A PIN prevents unauthorized access to the account.) Enter a four-digit number and press [OK].
   - If you do not want to set a PIN, press [No].

   When the account information you entered appears, confirm that it is correct.

10. Press [Yes] to register your information as entered.
11. Press [OK].

    Account registration is complete and your machine can now access the service.

12. Press .

Related Information

- Set Up Brother Web Connect

Scan and Upload Documents Using Brother Web Connect

Upload your scanned photos and documents directly to a web service without using a computer.

- When scanning and uploading JPEG files, monochrome scanning is not available.
- When scanning and uploading Searchable PDF or Microsoft Office files, monochrome and grey scanning is not available.
- When scanning and uploading JPEG files, each page is uploaded as a separate file.
- Uploaded documents are saved in an album named **From_BrotherDevice**.

For information regarding restrictions, such as the size or number of documents that can be uploaded, refer to the respective service's website.

If you are a restricted Web Connect user due to the Secure Function Lock feature (available for certain models), you cannot upload the scanned data.

>> MFC-J3530DW
>> MFC-J3930DW

MFC-J3530DW

1. Load your document.
2. Press ◀ or ▶ to display [Web].

   Press [Web].

   - You can also press [Scan] > [to Web].
   - If information regarding the Internet connection appears on the machine's LCD, read the information and press [OK].
   - Occasionally, updates or announcements about Brother Web Connect's features will appear on the LCD. Read the information, and then press [OK].

3. Press ▲ or ▼ to display the service that hosts the account to which you want to upload.

   Press the service name.
4. Press ▲ or ▼ to display your account name, and then press it.
5. If the PIN entry screen appears, enter the four-digit PIN and press [OK].
6. Press ▲ or ▼ to display [Upload from Scanner].

   Press [Upload from Scanner].

   - If you pressed [Scan] > [to Web], this option does not appear.
   - This option may not appear depending on the service.

7. Follow the on-screen instructions to complete this operation.

MFC-J3930DW

1. Load your document.
2. Swipe left or right or press ◀ or ▶ to display [Web].

   Press [Web].

   - You can also press [Scan] > [to Web].
   - If information regarding the Internet connection appears on the machine's LCD, read the information and press [OK].
   - Occasionally, updates or announcements about Brother Web Connect's features will appear on the LCD. Read the information, and then press [OK].

3. Swipe left or right or press ◀ or ▶ to display the service that hosts the account to which you want to upload. Press the service name.
4. Swipe up or down or press ▲ or ▼ to display your account name, and then press it.
5. If the PIN entry screen appears, enter the four-digit PIN and press [OK].
6. Press [Upload from Scanner].

This option may not appear depending on the service.

7. Follow the on-screen instructions to complete this operation.

Related Information

- Brother Web Connect

Upload a Document from an External Memory Device Using Brother Web Connect

Documents saved on media (such as a USB flash drive) connected to the machine can be uploaded directly to a web service.

- Uploaded documents are saved in an album named **From_BrotherDevice**.
- USB flash drive support is available only for some models.

For information regarding restrictions, such as the size or number of documents that can be uploaded, refer to the respective service's website.

If you are a restricted Web Connect user due to the Secure Function Lock feature (available for certain models), you cannot upload documents saved on media.

IMPORTANT

DO NOT remove the USB flash drive while the message appears on the LCD. Otherwise, the USB flash drive, or data stored on the USB flash drive could be damaged.

Brother Web Connect supports only file names written in English. Files named in the local language will not be uploaded.

>> MFC-J3530DW
>> MFC-J3930DW

MFC-J3530DW

1. Insert a USB flash drive into your machine.

   The LCD automatically changes.
2. Press ◀ or ▶ to display [Web].

   Press [Web].

   - If information regarding the Internet connection appears on the machine's LCD, read the information and press [OK].
   - Occasionally, updates or announcements about Brother Web Connect's features will appear on the LCD. Read the information, and then press [OK].
3. Press ▲ or ▼ to display the service that hosts the account to which you want to upload.

   Press the service name.
4. Press ▲ or ▼ to display your account name, and then press it.
5. If the PIN entry screen appears, enter the four-digit PIN and press [OK].
6. Press ▲ or ▼ to display [Upload from Media].

   Press [Upload from Media].
7. Follow the on-screen instructions to complete this operation.

MFC-J3930DW

1. Insert a USB flash drive into your machine.

   The LCD screen automatically changes.
2. Press [Web].

- If information regarding the Internet connection appears on the machine's LCD, read the information and press [OK].
- Occasionally, updates or announcements about Brother Web Connect's features will appear on the LCD. Read the information, and then press [OK].

3. Swipe left or right or press ◀ or ▶ to display the service that hosts the account to which you want to upload.

   Press the service name.
4. Swipe up or down or press ▲ or ▼ to display your account name, and then press it.
5. If the PIN entry screen appears, enter the four-digit PIN and press [OK].
6. Press [Upload from Media].
7. Follow the on-screen instructions to complete this operation.

Related Information

- Brother Web Connect

Download and Print Documents Using Brother Web Connect

Documents that have been uploaded to your account can be downloaded directly to your machine and printed. Documents that other users have uploaded to their own accounts for sharing can also be downloaded to your machine and printed, as long as you have viewing privileges for those documents. Certain services allow guest users to view documents that are public. When accessing a service or an account as a guest user, you can view documents that the owner has made public, that is, documents with no viewing restrictions.

To download other users' documents, you must have access privileges to view the corresponding albums or documents.

If you are a restricted user for Web Connect due to the Secure Function Lock feature (available for certain models), you cannot download the data.

The Secure Function Lock Page Limit feature applies to the print job using Web Connect.

Brother Web Connect supports only file names written in English. Files named in the local language will not be downloaded.

Related Information

- Brother Web Connect
- Download and Print Using Web Services

Download and Print Using Web Services

>> MFC-J3530DW
>> MFC-J3930DW

MFC-J3530DW

1. Press ◀ or ▶ to display [Web].

   Press [Web].

   - If information regarding the Internet connection appears on the machine's LCD, read the information and press [OK].
   - Occasionally, updates or announcements about Brother Web Connect's features will appear on the LCD. Read the information, and then press [OK].

2. Press ▲ or ▼ to display the service that hosts the document you want to download and print.

   Press the service name.

3. Do one of the following:
   - To log on to the service, press ▲ or ▼ to display your account name, and then press it. If the PIN entry screen appears, enter the four-digit PIN and press [OK].
   - To access the service as a guest user, press ▲ or ▼ to display [Use Service as a Guest User], and then press it. When the information regarding access as a guest user appears, press [OK].

4. Press ▲ or ▼ to display [Download to Print].

   Press [Download to Print].

   - If you accessed the service as a guest user, enter or select the account name of the user whose documents you want to download.

5. Press ▲ or ▼ to display the desired album, and then press it.

   - An album is a collection of documents. However, the actual term may differ depending on the service you use. When using Evernote®, you must select the notebook, and then select the note.
   - Some services do not require documents to be saved in albums. For documents not saved in albums, select [Show Unsorted Files] or [Show Unsorted Photos] to select documents. You cannot download documents from other users if the documents are not saved in an album.

6. Press the thumbnail of the document you want to print. Confirm the document on the LCD and press [OK]. Select additional documents to print (you can select up to 10 documents).
7. When finished, press [OK].
8. Follow the on-screen instructions to complete this operation.

MFC-J3930DW

1. Swipe left or right or press ◀ or ▶ to display [Web].

   Press [Web].

   - If information regarding the Internet connection appears on the machine's LCD, read the information and press [OK].
   - Occasionally, updates or announcements about Brother Web Connect's features will appear on the LCD. Read the information, and then press [OK].

2. Swipe left or right or press ◀ or ▶ to display the service that hosts the document you want to download and print.

Press the service name.

3. Do one of the following:
   - To log on to the service with your account, swipe up or down or press ▲ or ▼ to display your account name, and then press it. If the PIN entry screen appears, enter the four-digit PIN and press [OK].
   - To access the service as a guest user, swipe up or down or press ▲ or ▼ to display [Use Service as a Guest User], and then press it. When the information regarding access as a guest user appears, press [OK].
4. Press [Download to Print].

- If you accessed the service as a guest user, enter or select the account name of the user whose documents you want to download.

5. Swipe up or down or press ▲ or ▼ to display the desired album, and then press it.

- An album is a collection of documents. However, the actual term may differ depending on the service you use. When using Evernote®, you must select the notebook, and then select the note.
- Some services do not require documents to be saved in albums. For documents not saved in albums, select [Show Unsorted Files] or [Show unsorted photos] to select documents. You cannot download documents from other users if the documents are not saved in an album.

6. Press the thumbnail of the document you want to print. Confirm the document on the LCD and press [OK]. Select additional documents to print (you can select up to 10 documents).
7. When finished, press [OK].
8. Follow the on-screen instructions to complete this operation.

Related Information

- Download and Print Documents Using Brother Web Connect

Download and Save a Document to an External Memory Device Using Brother Web Connect

JPEG, PDF and Microsoft Office files can be downloaded from a service and saved directly on media connected to the machine. Documents that other users have uploaded to their own accounts for sharing can also be downloaded to your machine as long as you have viewing privileges for those documents. Certain services allow guest users to view documents that are public. When accessing a service or an account as a guest user, you can view documents that the owner has made public, that is, documents with no viewing restrictions.

- Make sure there is enough available space on your USB flash drive.
- To download other users' documents, you must have access privileges to view the corresponding albums or documents.
- USB flash drive support is available only for some models.
- Downloaded files are renamed based on the current date. For example, the first image saved on July 1, would be named 07010001.jpg. Note that the region setting also determines the date format of the file name.
- Images are saved in the "BROTHER" folder, which can be found on the root level of the media.

IMPORTANT

DO NOT remove the USB flash drive while the message appears on the LCD. Otherwise, the USB flash drive, or data stored on the USB flash drive could be damaged.

>> MFC-J3530DW
>> MFC-J3930DW

MFC-J3530DW

1. Insert a USB flash drive into your machine.

   The LCD automatically changes.
2. Press ◀ or ▶ to display [Web].

   Press [Web].

   - If information regarding the Internet connection appears on the machine's LCD, read the information and press [OK].
   - Occasionally, updates or announcements about Brother Web Connect's features will appear on the LCD. Read the information, and then press [OK].
3. Press ▲ or ▼ to display the service that hosts the document you want to download.

   Press the service name.
4. Do one of the following:
   - To log on to the service, press ▲ or ▼ to display your account name, and then press it. If the PIN entry screen appears, enter the four-digit PIN and press [OK].
   - To access the service as a guest user, press ▲ or ▼ to display [Use Service as a Guest User], and then press it. When the information regarding access as a guest user appears, press [OK].
5. Press ▲ or ▼ to display [Download to Media].

   Press [Download to Media].

   - If you accessed the service as a guest user, enter or select the account name of the user whose documents you want to download.
6. Follow the on-screen instructions to complete this operation.

- An album is a collection of documents. However, the actual term may differ depending on the service you use. When using Evernote®, you must select the notebook, and then select the note.
- Some services do not require documents to be saved in albums. For documents not saved in albums, select [Show Unsorted Files] or [Show Unsorted Photos] to select documents. You cannot download documents from other users if the documents are not saved in an album.

MFC-J3930DW

1. Insert a USB flash drive into your machine.

   The LCD screen automatically changes.
2. Press [Web].

   - If information regarding the Internet connection appears on the machine's LCD, read the information and press [OK].
   - Occasionally, updates or announcements about Brother Web Connect's features will appear on the LCD. Read the information, and then press [OK].
3. Swipe left or right or press ◀ or ▶ to display the service that hosts the document you want to download.

   Press the service name.
4. Do one of the following:
   - To log on to the service with your account, swipe up or down or press ▲ or ▼ to display your account name, and then press it. If the PIN entry screen appears, enter the four-digit PIN and press [OK].
   - To access the service as a guest user, swipe up or down or press ▲ or ▼ to display [Use Service as a Guest User], and then press it. When the information regarding access as a guest user appears, press [OK].
5. Press [Download to Media].

   - If you accessed the service as a guest user, enter or select the account name of the user whose documents you want to download.
6. Follow the on-screen instructions to complete this operation.

   - An album is a collection of documents. However, the actual term may differ depending on the service you use. When using Evernote®, you must select the notebook, and then select the note.
   - Some services do not require documents to be saved in albums. For documents not saved in albums, select [Show Unsorted Files] or [Show unsorted photos] to select documents. You cannot download documents from other users if the documents are not saved in an album.

Related Information

- Brother Web Connect

FaxForward to Cloud or E-mail

- Use the FaxForward to Cloud feature to automatically forward incoming faxes to your accounts with the available online services.

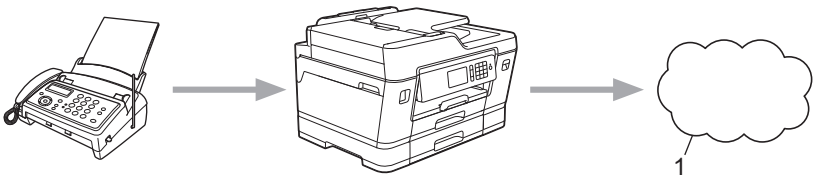

1. Web Service

- Use the FaxForward to E-mail feature to automatically forward incoming faxes to an inbox as email attachments.

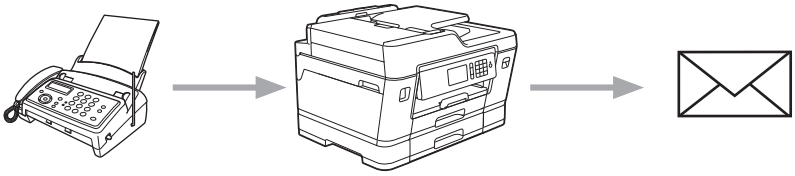

Related Information

- Brother Web Connect
- Turn On FaxForward to Cloud or E-mail
- Turn Off FaxForward to Cloud or E-mail

Turn On FaxForward to Cloud or E-mail

Turn on the FaxForward feature to automatically forward incoming faxes to either an online service or an inbox as email attachments.

- This feature is available only for monochrome faxes.
- If you turn on FaxForward, you cannot use the following features:
  - [Fax Forward]
  - [Fax Storage]
  - [PC Fax Receive]

>> MFC-J3530DW
>> MFC-J3930DW

MFC-J3530DW

1. Press ◀ or ▶ to display [Apps].

   Press [Apps].

   - If information regarding the Internet connection appears on the machine's LCD, read it, and then press [OK].
   - Occasionally, updates or announcements about Brother Web Connect's features will appear on the LCD. Read the information, and then press [OK].

2. Press ▲ or ▼ to display [FaxForward to Cloud/E-mail].

   Press [FaxForward to Cloud/E-mail].

   If information regarding [FaxForward to Cloud/E-mail] appears, read it, and then press [OK].

3. Press [On].
4. Press [Forward to Cloud] or [Forward to E-mail].
   - If you selected [Forward to Cloud], choose the online service you want to receive the faxes, and then specify your account name.
   - If you selected [Forward to E-mail], select the email address you want to receive the faxes as email attachments.
5. Follow the on-screen instructions to complete this operation.

MFC-J3930DW

1. Swipe left or right or press ◀ or ▶ to display [Apps].

   Press [Apps].

   - If information regarding the Internet connection appears on the machine's LCD, read it, and then press [OK].
   - Occasionally, updates or announcements about Brother Web Connect's features will appear on the LCD. Read the information, and then press [OK].

2. Press [FaxForward to Cloud/E-mail].

   If information regarding [FaxForward to Cloud/E-mail] appears, read it, and then press [OK].

3. Press [On].
4. Press [Forward to Cloud] or [Forward to E-mail].

- If you selected `[Forward to Cloud]`, choose the online service you want to receive the faxes, and then specify your account name.
- If you selected `[Forward to E-mail]`, select the email address you want to receive the faxes as email attachments.

5. Follow the on-screen instructions to complete this operation.

Related Information

- FaxForward to Cloud or E-mail
- Memory Receive Options

Turn Off FaxForward to Cloud or E-mail

Turn off FaxForward when you want to stop incoming faxes from automatically going to either an online service or an inbox as email attachments.

If there are received faxes still in your machine's memory, you cannot turn off FaxForward.

>> MFC-J3530DW
>> MFC-J3930DW

MFC-J3530DW

1. Press ◀ or ▶ to display [Apps].

   Press [Apps].

   - If information regarding the Internet connection appears on the machine's LCD, read it, and then press [OK].
   - Occasionally, updates or announcements about Brother Web Connect's features will appear on the LCD. Read the information, and then press [OK].

2. Press ▲ or ▼ to display [FaxForward to Cloud/E-mail].

   Press [FaxForward to Cloud/E-mail].

   If information regarding [FaxForward to Cloud/E-mail] appears, read it, and then press [OK].

3. Press [Off].
4. Press [OK].

MFC-J3930DW

1. Swipe left or right or press ◀ or ▶ to display [Apps].

   Press [Apps].

   - If information regarding the Internet connection appears on the machine's LCD, read it, and then press [OK].
   - Occasionally, updates or announcements about Brother Web Connect's features will appear on the LCD. Read the information, and then press [OK].

2. Press [FaxForward to Cloud/E-mail].

   If information regarding [FaxForward to Cloud/E-mail] appears, read it, and then press [OK].

3. Press [Off].
4. Press [OK].

Related Information

- FaxForward to Cloud or E-mail

AirPrint

- AirPrint Overview
- Before Using AirPrint
- Print Using AirPrint
- Scan Using AirPrint
- Send a Fax Using AirPrint (For MFC Models)

AirPrint Overview

AirPrint is a printing solution for Apple operating systems that allows you to wirelessly print photos, email, web pages and documents from your iPad, iPhone, iPod touch and Mac computer without the need to install a driver.

AirPrint also lets you send faxes directly from your Mac computer without printing them and lets you scan documents to your Mac computer.

For more information, visit Apple's website.

Use of the Works with Apple badge means that an accessory has been designed to work specifically with the technology identified in the badge and has been certified by the developer to meet Apple performance standards.

Related Information

- AirPrint

Before Using AirPrint

- Network Settings for Using AirPrint
- Disable and Enable AirPrint Using Web Based Management (Web Browser)

Network Settings for Using AirPrint

In order to use AirPrint, your mobile device must connect to the wireless network to which your Brother machine is connected. AirPrint supports wireless connections that use infrastructure mode or Wi-Fi Direct®.

To configure your mobile device for a wireless network, refer to your mobile device's user's guide. A link to your mobile device's user's guide on Apple's website can be found by tapping in Safari.

To configure your Brother machine for a wireless network, see the *Quick Setup Guide* or related topics in this guide. If your Brother machine supports a wired network, you can use a network cable to connect to the wireless access point/router.

If your Brother machine supports Wi-Fi Direct® and you want to configure your Brother machine for a Wi-Fi Direct® network, see related topics in this Online Guide.

Related Information

- Before Using AirPrint
- Configure Your Machine for a Wireless Network Using the One Push Method of Wi-Fi Protected Setup™ (WPS)
- Use Wi-Fi Direct®

Disable and Enable AirPrint Using Web Based Management (Web Browser)

Confirm that your Brother machine is connected to the same network as your computer.

1. Start your web browser.
2. Type "http://machine's IP address" in your browser's address bar (where "machine's IP address" is the machine's IP address).

   For example:

   http://192.168.1.2
3. No password is required by default. Type a password if you have set one, and then click .
4. Click the **Network** tab.
5. Click the **Protocol** menu in the left navigation bar.
6. To disable AirPrint, clear the **AirPrint** check box. To enable AirPrint, select the **AirPrint** check box.

   By default, AirPrint is enabled.
7. Click **Submit**.
8. Restart your machine to activate the configuration.

Related Information

- Before Using AirPrint
- Print the Network Configuration Report

Print Using AirPrint

- Print from iPad, iPhone, or iPod Touch
- Before Printing Using AirPrint (OS X)
- Print Using AirPrint (OS X)

Print from iPad, iPhone, or iPod Touch

The procedure used to print may vary by application. Safari is used in the example below.

1. Make sure your Brother machine is turned on.
2. Use Safari to open the page that you want to print.
3. Tap or .
4. Tap **Print**.
5. Make sure your Brother machine is selected.
6. If a different machine (or no printer) is selected, tap **Printer**.

   A list of available machines appears.
7. Tap your machine's name in the list.
8. Select the desired options, such as the number of pages to print and 2-sided printing (if supported by your machine).
9. Tap **Print**.

Related Information

- Print Using AirPrint

Before Printing Using AirPrint (OS X)

Before printing using OS X, add your Brother machine to the printer list on your Mac computer.

1. Select **System Preferences** from the Apple Menu.
2. Click **Print & Scan** or **Printers & Scanners**.
3. Click the + icon below the Printers pane on the left.
4. Click **Add Printer or Scanner…**. The **Add** screen appears.
5. Select your Brother machine, and then select **AirPrint** from the **Use** pop-up menu.
6. Click **Add**.

Related Information

- Print Using AirPrint

Print Using AirPrint (OS X)

The procedure used to print may vary by application. Safari is used in the example below. Before printing, make sure your Brother machine is in the printer list on your Mac computer.

1. Make sure your Brother machine is turned on.
2. On your Mac computer, use Safari to open the page that you want to print.
3. Click the **File** menu, and then select **Print**.
4. Make sure your Brother machine is selected. If a different machine (or no printer) is selected, click the **Printer** pop-up menu, and then select your Brother machine.
5. Select the desired options, such as the number of pages to print and 2-sided printing (if supported by your machine).
6. Click **Print**.

Related Information

- Print Using AirPrint

Scan Using AirPrint

- Before Scanning Using AirPrint (OS X)
- Scan Using AirPrint (OS X)

Before Scanning Using AirPrint (OS X)

- Before scanning using OS X, add your Brother machine to the scanner list on your Mac computer.
- Monochrome scan is not currently supported by OS X v10.9.

1. Select **System Preferences** from the Apple Menu.
2. Click **Printers & Scanners**.
3. Click the + icon below the Scanners pane on the left.
4. Click **Add Printer or Scanner…**.
   The **Add** screen appears.
5. Select your Brother machine, and then select **AirPrint** from the **Use** pop-up menu.
6. Click **Add**.

Related Information

- Scan Using AirPrint

Scan Using AirPrint (OS X)

Before scanning, make sure your Brother machine is in the scanner list on your Mac computer.

1. Load your document.
2. Select **System Preferences** from the Apple Menu.
3. Click **Printers & Scanners**.
4. Select your Brother machine from the scanner list.
5. Click the **Scan** tab, and then click the **Open Scanner…** button.

   The Scanner screen appears.
6. If you place the document in the ADF, select **Use Document Feeder** check box, and then select the size of your document from the scan size setting pop-up menu.
7. Select the destination folder or destination application from the destination setting pop-up menu.
8. Click **Show Details** to change the scanning settings if needed.

   You can crop the image manually by dragging the mouse pointer over the portion you want to scan when scanning from the scanner glass.
9. Click **Scan**.

Related Information

- Scan Using AirPrint

Send a Fax Using AirPrint (For MFC Models)

- Before Sending a Fax Using AirPrint (OS X)
- Send a Fax Using AirPrint (OS X)

Before Sending a Fax Using AirPrint (OS X)

Before sending a fax, add your Brother machine to the printer list on your Mac computer. Make sure your Brother machine is connected to the telephone line and works correctly.

1. Select **System Preferences** from the Apple Menu.
2. Click **Print & Scan** or **Printers & Scanners**.
3. Click the + icon below the Printers pane on the left.
4. Click **Add Printer or Scanner…**. The **Add** screen appears.
5. Select your Brother machine, and then select **AirPrint** from the **Use** pop-up menu.
6. Click **Add**.

Related Information

- Send a Fax Using AirPrint (For MFC Models)

Send a Fax Using AirPrint (OS X)

Make sure your Brother machine is in the printer list on your Mac computer. Apple TextEdit is used in the example below.

- AirPrint supports only monochrome fax documents.
- Your machine supports the Secure Function Lock feature. Sending faxes via AirPrint is not available if Fax Tx for each user is restricted.

1. Make sure your Brother machine is turned on.
2. On your Mac computer, open the file that you want to send as a fax.
3. Click the **File** menu, and then select **Print**.
4. Click the **Printer** pop-up menu, and then select **Brother MFC-XXXX - Fax** (where XXXX is your model name).
5. Type the fax recipient information.
6. Click **Fax**.

Related Information

- Send a Fax Using AirPrint (For MFC Models)

Mobile Printing for Windows

Mobile printing for Windows is a function to print wirelessly from your Windows mobile device. You can connect to the same network that your Brother machine is connected to and print without installing the printer driver on the device. Many Windows apps support this function.

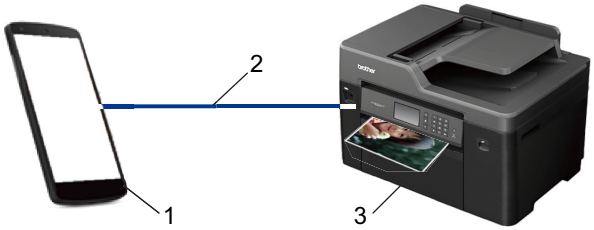

1. Windows mobile device (Windows 10 Mobile or later)
2. Wi-Fi® connection
3. Your Brother machine

Related Information

- Mobile/Web Connect

Mopria® Print Service

Mopria® Print Service is a print feature on Android™ mobile devices (Android™ version 4.4 or later) developed by the Mopria® Alliance. With this service, you can connect to the same network as your machine and print without additional setup. Many native Android™ apps, including Google Chrome™, Gmail™, and Gallery, support printing.

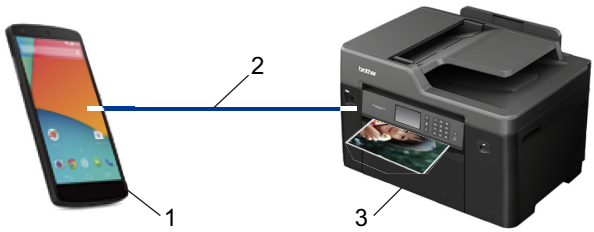

1. Android™ 4.4 or later
2. Wi-Fi® Connection
3. Your Brother machine

You must download the Mopria® Print Service from the Google Play™ Store and install it on your Android™ device. Before using this service, you must turn it on.

Related Information

- Mobile/Web Connect

Brother iPrint&Scan

Use Brother iPrint&Scan to print and scan from various mobile devices.

- For Android™ Devices

  Brother iPrint&Scan allows you to use features of your Brother machine directly from your Android™ device, without using a computer.

  Go to your model's **Downloads** page on the Brother Solutions Center at support.brother.com to download Brother iPrint&Scan.

- For Apple Devices

  Brother iPrint&Scan allows you to use features of your Brother machine directly from your Apple device.

  Download and install Brother iPrint&Scan from the App Store.

- For Windows Devices

  Brother iPrint&Scan allows you to use features of your Brother machine directly from your Windows device, without using a computer.

  Download and install Brother iPrint&Scan from the Microsoft Store.

For more detailed information, see the *Mobile Print/Scan Guide for Brother iPrint&Scan*. Go to your model's **Manuals** page on the Brother Solutions Center at support.brother.com.

Related Information

- Mobile/Web Connect

Near-Field Communication (NFC)

Related Models: MFC-J3930DW

Near-Field Communication (NFC) allows for simple transactions, data exchange and wireless connections between two devices that are close to each other.

If your Android™ device is NFC-enabled, you can print data (photos, PDF files, text files, web pages and email messages) from the device or scan photos and documents to the device by touching it to the NFC symbol on the machine's control panel.

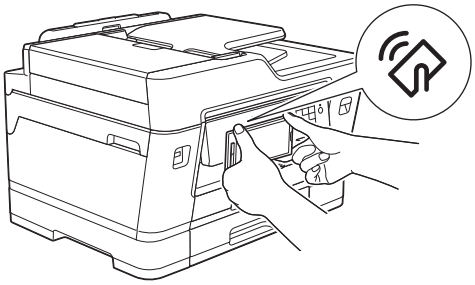

You must download and install Brother iPrint&Scan to your Android™ device to use this feature. For more detailed information, see the *Mobile Print/Scan Guide for Brother iPrint&Scan*. Go to your model's **Manuals** page on the Brother Solutions Center at support.brother.com.

Related Information

- Mobile/Web Connect
- Control Panel Overview

ControlCenter

Use Brother's ControlCenter software utility to quickly access your frequently-used applications. Using ControlCenter gives you direct access to specific applications.

- ControlCenter4 (Windows)
- ControlCenter2 (Mac)

ControlCenter4 (Windows)

- Change the Operation Mode in ControlCenter4 (Windows)
- Scan Using ControlCenter4 Home Mode (Windows)
- Scan Using ControlCenter4 Advanced Mode (Windows)
- Set Up the Brother Machine Using ControlCenter4 (Windows)
- Create a Custom Tab Using ControlCenter4 Advanced Mode (Windows)
- Set Up the Brother Machine from Your Computer (Windows)
- Set Up Your Machine's Address Book Using ControlCenter4 (Windows)

Change the Operation Mode in ControlCenter4 (Windows)

ControlCenter4 has two operation modes: **Home Mode** and **Advanced Mode**. You can change modes at any time.

Home Mode

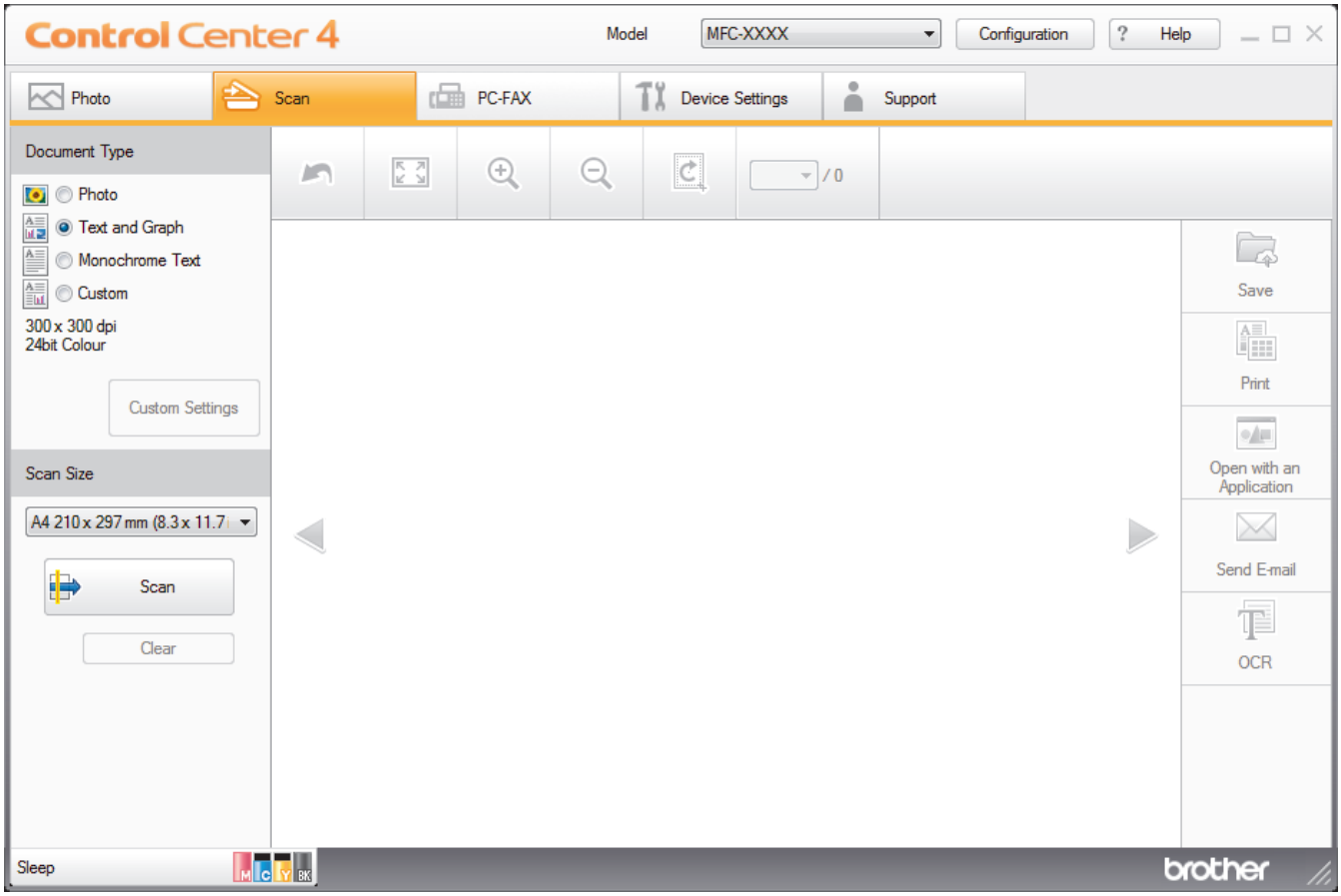

Advanced Mode

- **Home Mode**

  ControlCenter4 Home Mode lets you access your machine's main features easily.

- **Advanced Mode**

ControlCenter4 Advanced Mode gives you more control over the details of your machine's features and allows you to customise one-button scan actions.

To change operation mode:

1. Click the (**ControlCenter4**) icon in the task tray, and then select **Open**.
2. Click the **Configuration** button, and then select **Mode Select**.
3. The mode selection dialog box appears. Select either the **Home Mode** or **Advanced Mode** option.

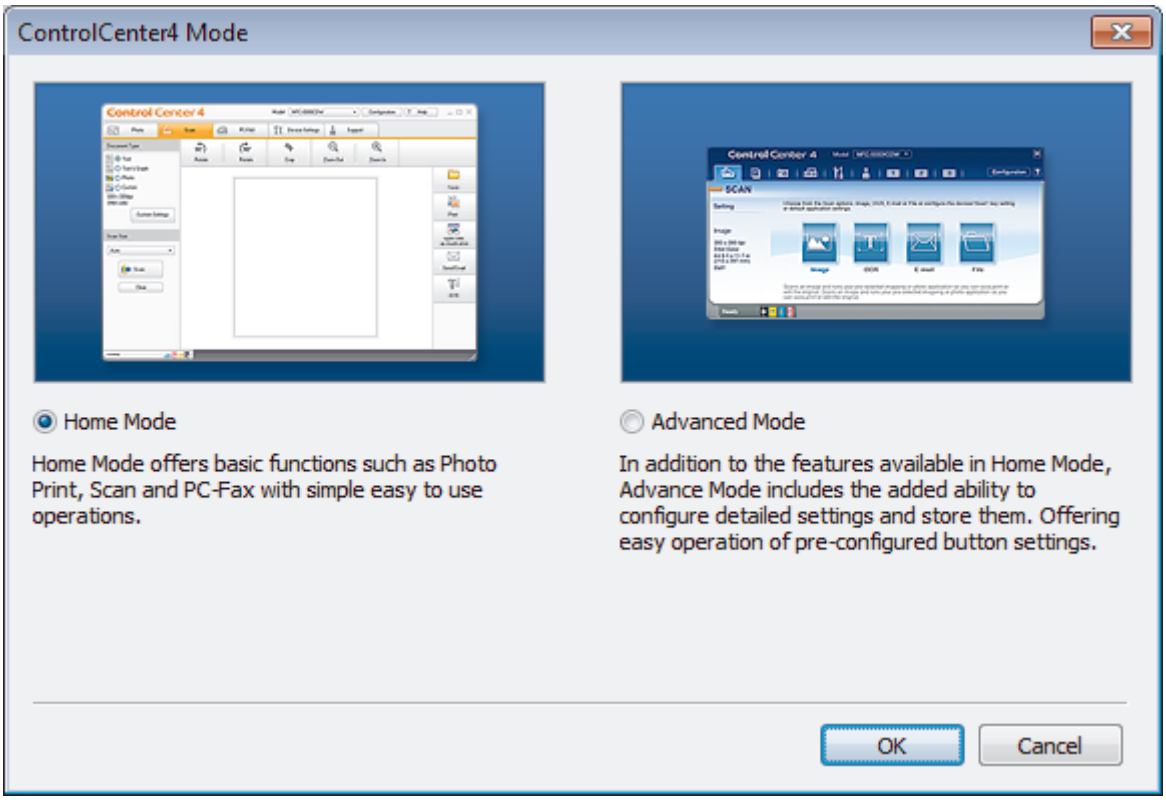

4. Click **OK**.

Related Information

- ControlCenter4 (Windows)
- Scan Using ControlCenter4 Home Mode (Windows)
- Scan Using ControlCenter4 Advanced Mode (Windows)

Scan Using ControlCenter4 Home Mode (Windows)

Use ControlCenter4 Home Mode to access your machine's main features.

- Scan Using ControlCenter4 Home Mode (Windows)
- Save Scanned Data to a Folder as a PDF File Using ControlCenter4 Home Mode (Windows)
- Scan Both Sides of a Document Automatically Using ControlCenter4 Home Mode (Windows)
- Scan Settings for ControlCenter4 Home Mode (Windows)
- Change the Operation Mode in ControlCenter4 (Windows)

Scan Using ControlCenter4 Advanced Mode (Windows)

ControlCenter4 Advanced Mode gives you more control over the details of your machine's features and allows you to customise one-button scan actions.

- Scan Photos and Graphics Using ControlCenter4 Advanced Mode (Windows)
- Save Scanned Data to a Folder as a PDF File Using ControlCenter4 Advanced Mode (Windows)
- Scan Both Sides of a Document Automatically Using ControlCenter4 Advanced Mode (Windows)
- Scan Both Sides of an ID Card Using ControlCenter4 Advanced Mode (Windows)
- Scan to Email Attachment Using ControlCenter4 Advanced Mode (Windows)
- Scan to an Editable Text File (OCR) Using ControlCenter4 Advanced Mode (Windows)
- Scan to an Office File Using ControlCenter4 Advanced Mode (Windows)
- Scan Settings for ControlCenter4 Advanced Mode (Windows)
- Change the Operation Mode in ControlCenter4 (Windows)

Set Up the Brother Machine Using ControlCenter4 (Windows)

If Secure Function Lock is set to On, you cannot use Remote Setup.

1. Click the (**ControlCenter4**) icon in the task tray, and then click **Open**.
2. Click the **Device Settings** tab.
3. Click the **Remote Setup** button.
4. Configure the settings as needed.

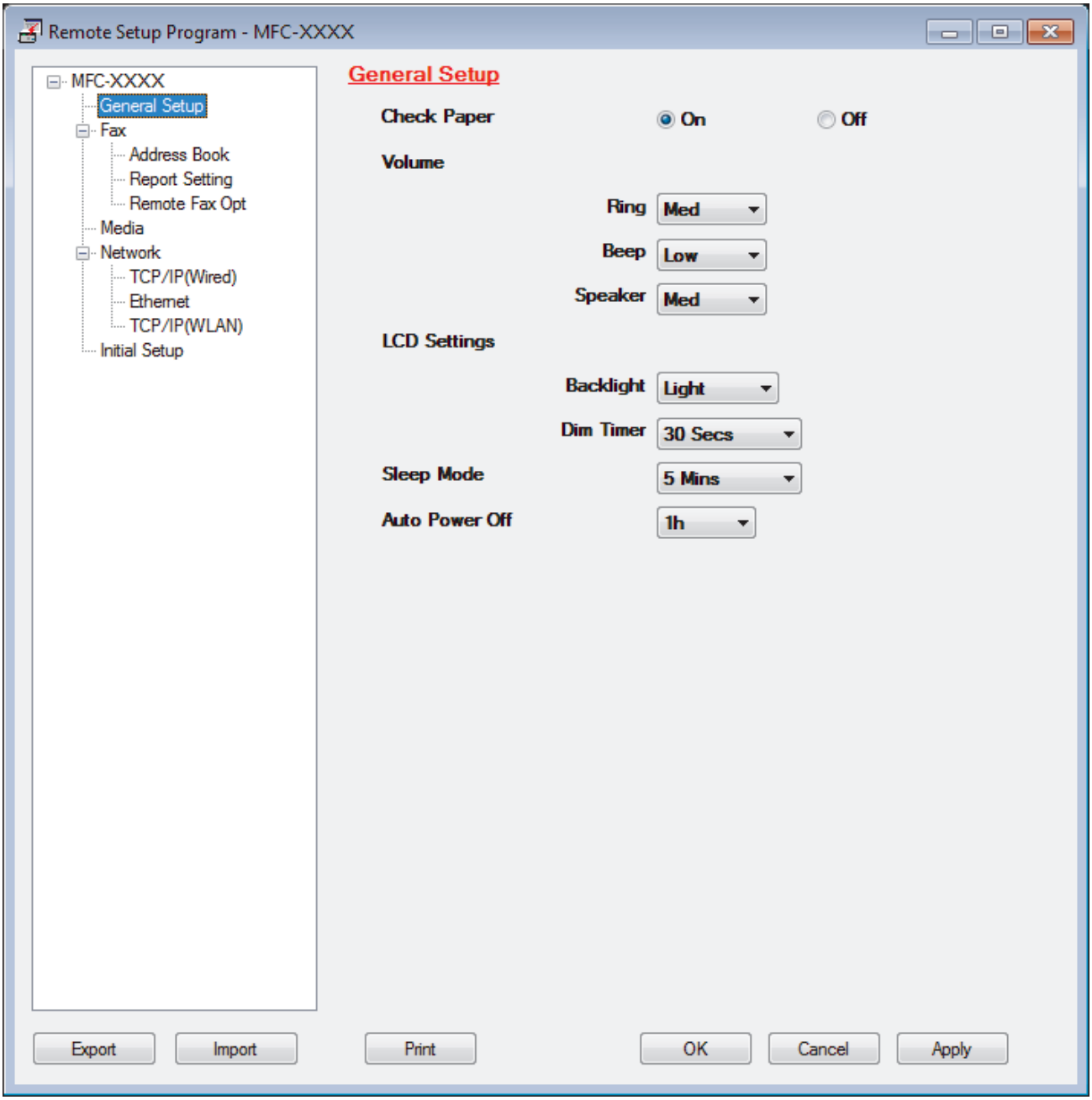

Export

Click to save the current configuration settings to a file.

Click **Export** to save your address book or all settings for your machine.

Import

Click to import a file and read its settings.

Print

Click to print the selected items on the machine. You cannot print the data until it is uploaded to the machine. Click **Apply** to upload the new data to the machine, and then click **Print**.

OK

Click to start uploading data to the machine, and then exit the Remote Setup Program. If an error message appears, confirm that your data is correct, and then click **OK**.

Cancel

Click to exit the Remote Setup Program without uploading data to the machine.

Apply

Click to upload data to the machine without exiting the Remote Setup Program.

5. Click **OK**.

- If your computer is protected by a firewall and is unable to use Remote Setup, you may need to configure the firewall settings to allow communication through port numbers 137 and 161.
- If you are using Windows Firewall and you installed the Brother software and drivers from the CD-ROM, the necessary firewall settings have already been set.

Related Information

- ControlCenter4 (Windows)
- Remote Setup (Windows)

Create a Custom Tab Using ControlCenter4 Advanced Mode (Windows)

You can create up to three customised tabs, each including up to five customised buttons, with your preferred settings.

Select **Advanced Mode** as the mode setting for ControlCenter4.

1. Click the (**ControlCenter4**) icon in the task tray, and then click **Open**.
2. Click the **Configuration** button, and then select **Create custom tab**.
   A custom tab is created.
3. To change the name of a custom tab, right-click the custom tab, and then select **Rename custom tab**.
4. Click the **Configuration** button, select **Create custom button**, and then select the button you want to create.
   The settings dialog box appears.
5. Type the button name, and then change the settings, if needed. Click **OK**.
   The setting options vary depending on the button you select.

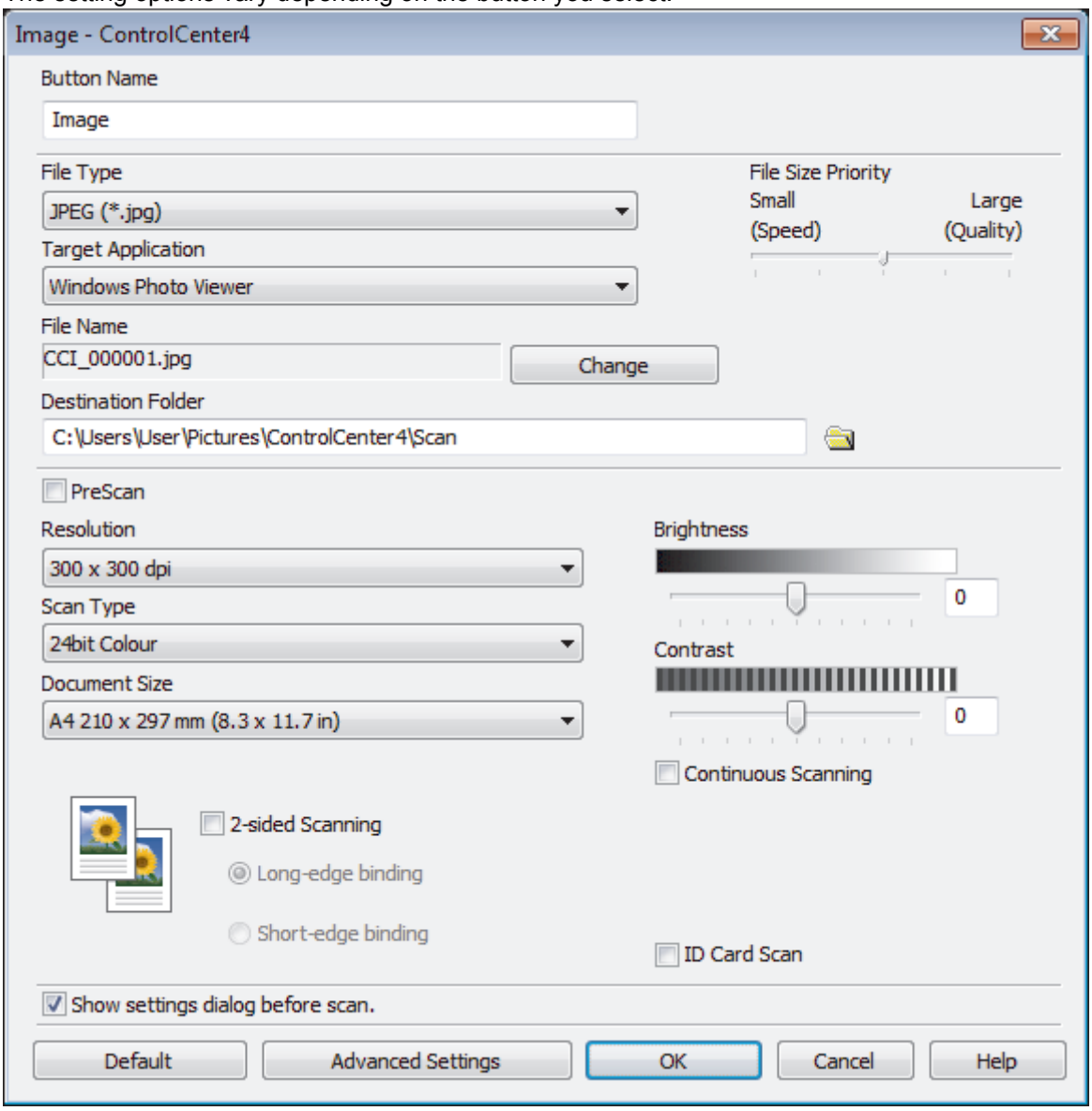

You can change or remove the created tab, button, or settings. Click the **Configuration** button, and then follow the menu.

Related Information

- ControlCenter4 (Windows)

ControlCenter2 (Mac)

- Scan Using ControlCenter2 (Mac)
- Set Up the Brother Machine Using ControlCenter2 (Mac)
- Turn the AutoLoad Feature On (Mac)
- Set Up Your Machine's Address Book Using ControlCenter2 (Mac)

Scan Using ControlCenter2 (Mac)

Use Brother's ControlCenter software to scan photos and save them as JPEGs, PDFs, or other file formats.

- Scan Using ControlCenter2 (Mac)
- Save Scanned Data to a Folder as a PDF File Using ControlCenter2 (Mac)
- Scan Both Sides of a Document Automatically Using ControlCenter2 (Mac)
- Scan Both Sides of an ID Card Using ControlCenter2 (Mac)
- Scan to Email Attachment Using ControlCenter2 (Mac)
- Scan to an Editable Text File (OCR) Using ControlCenter2 (Mac)
- Scan to an Office File Using ControlCenter2 (Mac)
- Scan Settings for ControlCenter2 (Mac)

Set Up the Brother Machine Using ControlCenter2 (Mac)

If Secure Function Lock is set to On, you cannot use Remote Setup.

1. In the **Finder** menu bar, click **Go** > **Applications** > **Brother**, and then double-click the (**ControlCenter**) icon.
   The **ControlCenter2** screen appears.
2. Click the **DEVICE SETTINGS** tab.
3. Click the **Remote Setup** button.
   The Remote Setup Program screen appears.

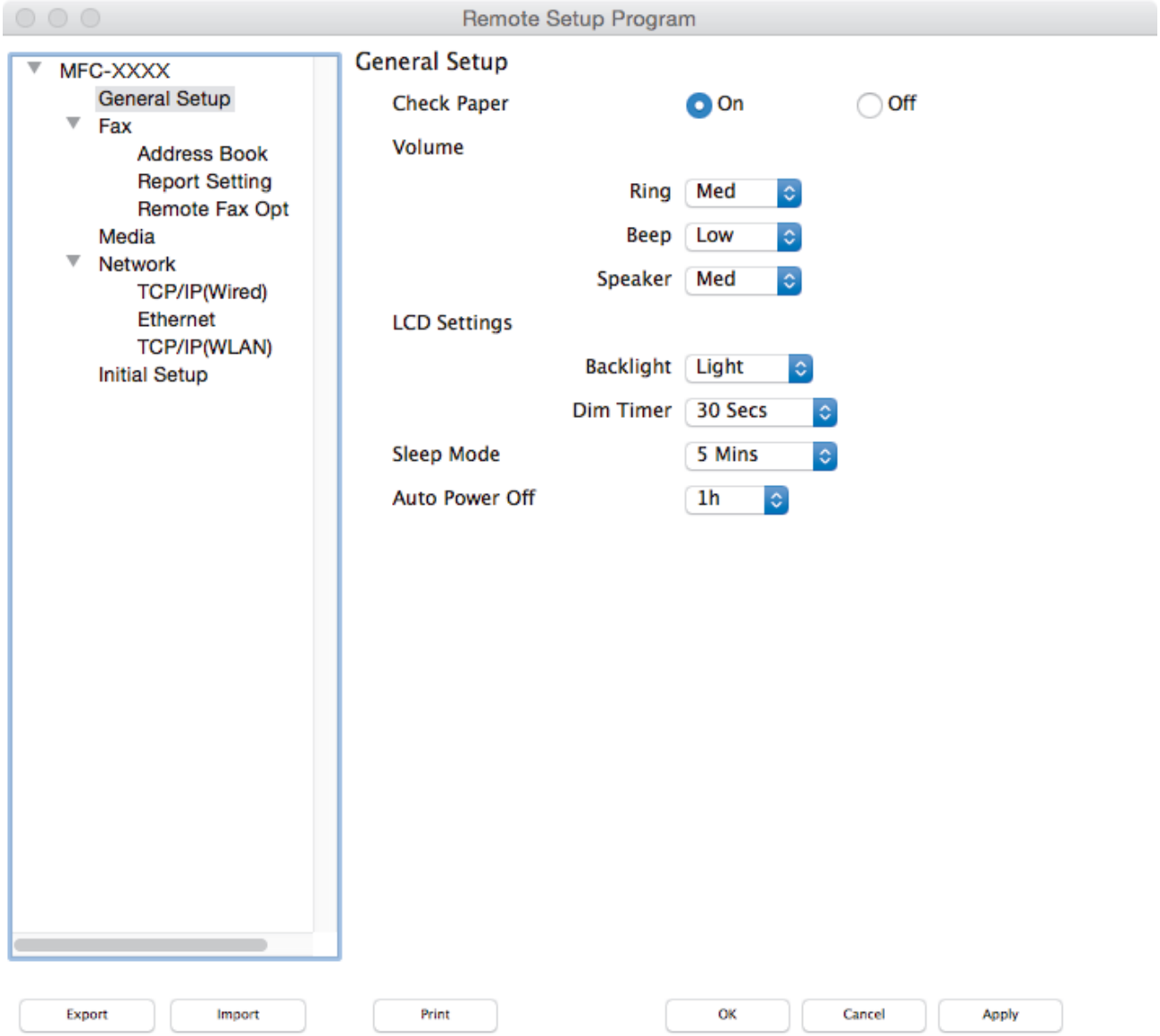

4. Configure the settings as needed.

   Export

   Click to save the current configuration settings to a file.

Click **Export** to save your address book or all settings for your machine.

Import

Click to import a file and read its settings.

Print

Click to print the selected items on the machine. You cannot print the data until it is uploaded to the machine. Click **Apply** to upload the new data to the machine, and then click **Print**.

OK

Click to start uploading data to the machine, and then exit the Remote Setup Program. If an error message appears, enter the correct data again, and then click **OK**.

Cancel

Click to exit the Remote Setup Program without uploading data to the machine.

Apply

Click to upload data to the machine without exiting the Remote Setup Program.

5. When finished, click **OK**.

Related Information

- ControlCenter2 (Mac)
- Remote Setup (Mac)

Turn the AutoLoad Feature On (Mac)

Turn AutoLoad on to launch ControlCenter2 automatically each time you start your Mac.

1. In the **Finder** menu bar, click **Go** > **Applications** > **Brother**, and then double-click the (**ControlCenter**) icon.
   The **ControlCenter2** screen appears.
2. Click the **Configuration** button, and then select **Preferences**.
3. Select the **Start ControlCenter on computer startup** check box.
4. Click **OK**.

Related Information

- ControlCenter2 (Mac)

Troubleshooting

If you think there is a problem with your machine, first check each of the items below, then try to identify the problem, and follow our troubleshooting tips.

You can correct most problems yourself. If you need additional help, the Brother Solutions Center offers the latest FAQs and troubleshooting tips.

Visit us at support.brother.com.

Click **FAQs & Troubleshooting** and search for your model name.

First, check the following:

- The machine's power cord is connected correctly and the machine's power is on.
- All of the machine's orange protective parts have been removed.
- The ink cartridges are installed correctly.
- The Scanner Cover and the Jam Clear Cover are fully closed.
- Paper is inserted correctly in the paper tray.
- The interface cables are securely connected to the machine and the computer, or the wireless connection is set up on both the machine and your computer.
- (For network models) The access point (for wireless), router, or hub is turned on and its link button is blinking.
- The machine's LCD is displaying messages.

If you did not solve the problem with the checks, identify the problem and then see *Related Information*.

Related Information

- Error and Maintenance Messages
- Document Jams
- Printer Jam or Paper Jam
- If You Are Having Difficulty with Your Machine
- Check the Machine Information
- Reset Your Brother Machine
- Paper Handling and Printing Problems
- Telephone and Fax problems
- Other Problems
- Network Problems
- AirPrint Problems

Error and Maintenance Messages

As with any sophisticated office product, errors may occur and supply items may have to be replaced. If this happens, your machine identifies the error or required routine maintenance and shows the appropriate message. The most common error and maintenance messages are shown in the table.

You can correct most errors and perform routine maintenance yourself. If you need more tips, go to your model's **FAQs & Troubleshooting** page on the Brother Solutions Center at support.brother.com.

- (MFC-J3930DW)

  If the touchscreen displays errors and your Android™ device supports the NFC feature, touch your device to the NFC symbol on the control panel to access the Brother Solutions Center and browse the latest FAQs from your device. (Your mobile telephone provider's message and data rates may apply.)

  Make sure the NFC settings of both your Brother machine and your Android™ device are set to On.
- *Related Information* references are at the bottom of this page.

MFC-J3530DW

Error Message	Cause	Action
`B&W Print Only` `Replace ink.`	One or more of the colour ink cartridges have reached the end of their lives. You can use the machine in monochrome mode for approximately four weeks depending on the number of pages you print. While this message appears on the touchscreen, each operation works in the following way: • Printing If the media type is set to **Plain Paper** in the **Basic** tab, and **Greyscale** is chosen in the **Advanced** tab of the printer driver, you can use the machine as a monochrome printer. • Copying If the paper type is set to `Plain Paper`, you can make copies in monochrome. • Faxing If the paper type is set to `Plain Paper`, the machine will receive and print the faxes in monochrome.	Replace the ink cartridges. See *Related Information*: *Replace the Ink Cartridges*. Although the Cause column lists options for using the machine after this error appears, you may not be able to use the machine until you replace the ink cartridge(s) under the following conditions: • If you unplug the machine or remove the ink cartridge. • If you select the **Slow Drying Paper** option on the machine or in the printer driver.
`Cannot Detect`	You installed a new ink cartridge too quickly and the machine did not detect it.	Take out the new ink cartridge and reinstall it slowly and firmly until it locks into place. See *Related Information*: *Replace the Ink Cartridges*.
	An ink cartridge is not installed correctly.	
	A used ink cartridge was reinstalled.	Remove the used ink cartridge and install a new one.
	If you are using non Brother Original ink, the machine may not detect the ink cartridge.	Replace the cartridge with a Brother Original ink cartridge. If the error message remains, contact Brother customer service or your local Brother dealer.
	The ink cartridge must be replaced.	Replace the cartridge with a Brother Original ink cartridge.

Error Message	Cause	Action
	The new ink cartridge has an air bubble.	Slowly turn the ink cartridge so that the ink supply port is pointing downwards, and then reinstall the cartridge.
	The wrong Brother model ink cartridge was installed.	Check the model numbers of the ink cartridges and install the correct ink cartridges.
Comm.Error	Poor telephone line quality caused a communication error.	Send the fax again or connect the machine to another telephone line. If the problem continues, contact the telephone company and ask them to check your telephone line.
Connection Error	Other devices are trying to connect to the Wi-Fi Direct network at the same time.	Make sure there are no other devices trying to connect to the Wi-Fi Direct network, and then try to configure the Wi-Fi Direct settings again.
Connection Failed	The Brother machine and your mobile device cannot communicate during the Wi-Fi Direct network configuration.	• Move the mobile device closer to your Brother machine. • Move your Brother machine and the mobile device to an obstruction-free area. • If you are using the PIN Method of WPS, make sure you have entered the correct PIN.
Cover is Open.	The scanner cover is not locked in the closed position.	Lift the scanner cover and then close it again.
		Make sure the telephone line cord and interface cable (if used) have been guided correctly through the cable channel and out the back of the machine.
	The ink cartridge cover is not locked in the closed position.	Firmly close the ink cartridge cover until it locks into place.
Data Remaining in Memory	Print data is left in the machine's memory.	Press ✕. The machine will cancel the job and clear it from the memory. Try to print again.
Disconnected	The other person or other person's fax machine stopped the call.	Try to send or receive again. If calls are stopped repeatedly and you are using a VoIP (Voice over IP) system, try changing the Compatibility to Basic (for VoIP). See *Related Information*: *Telephone Line Interference/VoIP*.
Document Jam/too Long	The document was not inserted or fed correctly, or the document scanned from the ADF was too long.	Remove the jammed document, and then press ✕. Set the document in the ADF correctly. See *Related Information*: *Load Documents in the Automatic Document Feeder (ADF)*. See *Related Information*: *Document Jams*.
High Temperature	The room temperature is too high.	After cooling the room, allow the machine to cool down to room temperature. Try again when the machine has cooled down.

Error Message	Cause	Action
Hub is Unusable.	A hub or USB flash drive with hub has been connected to the USB direct interface.	Hubs, including a USB flash drive with a built-in hub, are not supported. Unplug the device from the USB direct interface.
Ink Absorber NearFull	The ink absorber box or flushing box is nearly full.	The ink absorber box or flushing box must be replaced soon. Contact Brother customer service or your local Brother dealer.
Ink Absorber Pad Full	The ink absorber box or flushing box is full. These components are periodic maintenance items that may require replacement after a period of time to ensure optimum performance from your Brother machine. Because these components are periodic maintenance items, the replacement is not covered under the warranty. The need to replace these items and the time period before replacement is dependent on the number of purges and flushes required to clean the ink system. These boxes acquire amounts of ink during the different purging and flushing operations. The number of times a machine purges and flushes for cleaning varies depending on different situations. For example, frequently powering the machine on and off will cause numerous cleaning cycles since the machine automatically cleans upon power up. The use of non-Brother ink may cause frequent cleanings because non-Brother ink could cause poor print quality which is resolved by cleaning. The more cleaning the machine requires, the faster these boxes will fill up. **Repairs resulting from the use of non-Brother supplies may not be covered under the stated product warranty.**	The ink absorber box or flushing box must be replaced. Contact Brother customer service or your local Brother Authorised Service Centre to have your machine serviced. Reasons for cleaning are: 1. The machine automatically cleans itself after you remove the power cord and plug it back in. 2. After a paper jam has been cleared, the machine automatically cleans itself before the next received page is printed. 3. The machine automatically cleans itself after sitting idle for more than 30 days (infrequent use). 4. The machine automatically cleans itself after ink cartridges of the same colour have been replaced 12 times.
Ink Low	One or more of the ink cartridges are near the end of their lives. If the sending machine has the ability to convert it, the colour fax will be printed at your machine as a monochrome fax.	Order a new ink cartridge. You can continue printing until the touchscreen displays Replace Ink. See *Related Information*: *Replace the Ink Cartridges*. • **You can still scan even if the ink is low or needs to be replaced.**
Install Ink	An ink cartridge is not installed correctly.	Remove the new ink cartridge and re-install it slowly and firmly until it locks into place. See *Related Information*: *Replace the Ink Cartridges*.
Jam Front/Rear Jam Front Jam Rear Jam Manual Feed Slot Jam Front/Manual Feed Slot Jam Tray2 Repeat Jam XX	The paper is jammed in the machine.	Remove the jammed paper. See *Related Information*: *Printer Jam or Paper Jam*.
		If there is a repeat paper jam, try another paper jam clear operation. See *Related Information*: *Remove Paper Scraps*.
	The paper guides are not set to the correct paper size.	Make sure the paper guides are set to the correct paper size.

Error Message	Cause	Action
	The machine's paper support is not set correctly.	Make sure the paper support is fully inserted into the machine. See *Related Information*: *Paper is Jammed in the Front of the Machine*.
	More than one sheet of paper was placed in the manual feed slot. -**OR**- Another sheet of paper was placed in the manual feed slot before the touchscreen prompted you to load another sheet of paper.	Do not put more than one sheet of paper in the manual feed slot at any one time. Wait until the touchscreen prompts you to load another sheet of paper before you feed the next sheet of paper in the manual feed slot. Remove the jammed paper. See *Related Information*: *Printer Jam or Paper Jam*.
	Paper dust has accumulated on the surface of the paper pick-up rollers.	Clean the paper pick-up rollers. See *Related Information*: *Clean the Paper Pick-up Rollers*.
`Low Temperature`	The room temperature is too low.	After warming the room, allow the machine to warm up to room temperature. Try again when the machine has warmed up.
`Media is Full.`	The USB flash drive you are using already contains 999 files.	Your machine can only save to your USB flash drive if it contains fewer than 999 files. Delete unused files and try again.
	The USB flash drive you are using does not have enough free space to scan the document.	Delete unused files from your USB flash drive to make some free space, and then try again.
`No Caller ID`	There is no incoming call history. You did not receive calls or you have not subscribed to the Caller ID service from your telephone company.	To use the Caller ID feature, contact your telephone company. See *Related Information*: *Caller ID*.
`No Device`	When configuring the Wi-Fi Direct network, the Brother machine cannot find your mobile device.	• Make sure your machine and mobile device are in the Wi-Fi Direct mode. • Move the mobile device closer to your Brother machine. • Move your Brother machine and the mobile device to an obstruction-free area. • If you are manually configuring the Wi-Fi Direct network, make sure you have entered the correct password. • If your mobile device has a configuration page for how to obtain an IP address, make sure the IP address of your mobile device has been configured via DHCP.
`No File`	The USB flash drive in the media drive does not contain a .JPG file.	Put the correct USB flash drive into the slot again.

`No Paper Fed`
`No Paper Fed [Tray #1]`
`No Paper Fed [Tray #2]`
	The machine is out of paper or paper is not correctly loaded in the paper tray.	Do one of the following:
		• Refill the paper tray, and then follow the LCD instructions.
		• Remove and reload the paper, and then follow the LCD instructions.
		See *Related Information*: *Load Paper*.

Error Message	Cause	Action
	The paper was not inserted in the centre position of the manual feed slot.	Remove the paper and reinsert it in the centre of the manual feed slot, and then follow the LCD instructions. See *Related Information*: *Load Paper in the Manual Feed Slot*.
	The Jam Clear Cover is not closed correctly.	Make sure the Jam Clear Cover is closed evenly at both ends. See *Related Information*: *Printer Jam or Paper Jam*.
	Paper dust has accumulated on the surface of the paper pick-up rollers.	Clean the paper pick-up rollers. See *Related Information*: *Clean the Paper Pick-up Rollers*.
`No Response/Busy`	The number you dialled does not answer or is busy.	Verify the number and try again.
`Out of Fax Memory`	The fax memory is full.	Do one of the following: • Clear the data from the memory. To gain extra memory, you can turn off Memory Receive. See *Related Information*: *Turn Off Memory Receive*. • Print the faxes that are in the memory. See *Related Information*: *Print a Fax Stored in the Machine's Memory*.
`Out of Memory`	The machine's memory is full.	**If a fax-sending or copy operation is in progress:** • Press ✕ or `Quit` or `Close` and wait until the other operations that are in progress finish, and then try again. • Press `Send Now` to send the pages scanned so far. • Press `Partial Print` to copy the pages scanned so far. • Clear the data in the memory. To gain extra memory, you can turn Memory Receive off. See *Related Information*: *Turn Off Memory Receive*. • Print the faxes stored in the memory. See *Related Information*: *Print a Fax Stored in the Machine's Memory*.

`Paper Size Mismatch`
`Paper Size Mismatch [Tray #1]`
`Paper Size Mismatch [Tray #2]`
	The paper size setting does not match the size of paper in the tray.
	-**OR**-
	The paper orientation is not proper for the paper size.
	-**OR**-
	You did not set the paper guides in the tray to the indicators for the paper size you are using.
		1. Check that the paper size you selected on the machine's display matches the size of the paper in the tray.
		See *Related Information*: *Change the Paper Size and Paper Type*.
		2. Make sure you loaded the paper in the proper orientation and set the paper guides at the indicators for your paper size.
		See *Related Information*: *Load Paper*.
		3. After you have checked the paper size and the paper orientation, follow the LCD instructions.

Error Message	Cause	Action
		If printing from your computer, make sure the paper size you selected in the printer driver matches the size of paper in the tray. See *Related Information*: *Print Settings (Windows)* or *Print Options (Mac)*.

`Paper Tray not detected`
`Paper Tray #1 not detected`
`Paper Tray #2 not detected`
	The paper tray is not completely inserted.	Slowly push the paper tray completely into the machine.

	Paper or a foreign object has prevented the paper tray from being inserted properly.	Pull the paper tray out of the machine, and remove the jammed paper or foreign object. If you cannot find or remove the jammed paper, see *Related Information*: *Printer Jam or Paper Jam*.
`Repetitive No Paper Fed`	Paper dust has accumulated on the surface of the paper pick-up rollers.	Clean the paper pick-up rollers. See *Related Information*: *Clean the Paper Pick-up Rollers*.
`Repetitive Paper Jams`	A foreign object, such as a paper clip or a piece of ripped paper, is in the machine.	Remove any foreign objects and paper scraps in the machine. See *Related Information*: *Remove Paper Scraps*.
`Replace Ink`	One or more of the ink cartridges have reached the end of their lives. The machine will stop all print operations. While memory is available, monochrome faxes will be stored in the memory. If the sending machine has the ability to convert it, the colour fax will be stored in the memory as a monochrome fax.	Replace the ink cartridges. See *Related Information*: *Replace the Ink Cartridges*. • **You can still scan even if the ink is low or needs to be replaced.**
`Sending Error` `Wrong Document Size Settings`	The document size option does not match the size of your fax document.	Select the correct document size option, and then press `Fax Start` again.
`The maximum number of devices are already connected using Wi-Fi Direct.`	Two mobile devices are already connected to the Wi-Fi Direct network when the Brother machine is the Group Owner (G/O).	After the current connection between your Brother machine and another mobile device has shut down, try to configure the Wi-Fi Direct settings again. You can confirm the connection status by printing the Network Configuration Report. See *Related Information*: *Print the Network Configuration Report*.
`Touchscreen Init. Failed`	The touchscreen was pressed before the power on initialisation was completed.	Make sure nothing is touching or resting on the touchscreen, especially when plugging the machine in.
	Debris may be stuck between the lower part of the touchscreen and its frame.	Insert a piece of stiff paper between the lower part of the touchscreen and its frame and slide it back and forth to push out the debris.

`Tray Settings`
`Tray #1 Settings`
`Tray #2 Settings`
	This message is displayed when the setting to confirm the paper type and size is enabled.	To not display this confirmation message, change the setting to Off.
		See *Related Information*: *Change the Check Paper Size Setting*.

`Unable to Clean XX`
`Unable to Initialize XX`
`Unable to Print XX`
	The machine has a mechanical problem.
	-**OR**-
	A foreign object, such as a paper clip or a piece of ripped paper, is in the machine.
		Open the scanner cover and remove any foreign objects and paper scraps from inside the machine. If the error message continues, disconnect the machine from the power for several minutes, and then reconnect it.

Error Message	Cause	Action
		You can try additional paper jam clear operations. See *Related Information*: *Remove Paper Scraps*. (If you cannot print received faxes, transfer them to another fax machine or to your computer.) See *Related Information*: *Transfer Your Faxes or Fax Journal Report*.
`Unable to Scan XX`	The machine has a mechanical problem.	Disconnect the machine from the power for several minutes, and then reconnect it. (If you cannot print received faxes, transfer them to another fax machine or to your computer.) See *Related Information*: *Transfer Your Faxes or Fax Journal Report*.
`Unusable Device` `Disconnect device from front connector & turn machine off & then on`	A broken device is connected to the USB direct interface.	Unplug the device from the USB direct interface, then press ⏻ to turn the machine off and then on again.
`Unusable Device` `Please disconnect USB device.`	A USB device or USB flash drive that is not supported has been connected to the USB direct interface.	Unplug the device from the USB direct interface. Turn the machine off and then on again.
`Wrong Tray Settings`	The machine's Paper Size and Tray Use settings do not match the size of paper in the tray you are using.	Follow the instructions on the touchscreen and try to print again. Configure the paper size setting for the tray according to the LCD instructions.

MFC-J3930DW

Error Message	Cause	Action
`Black and White Print Only` `Replace ink.`	One or more of the colour ink cartridges have reached the end of their lives. You can use the machine in monochrome mode for approximately four weeks depending on the number of pages you print. While this message appears on the touchscreen, each operation works in the following way: • Printing If the media type is set to **Plain Paper** in the **Basic** tab, and **Greyscale** is chosen in the **Advanced** tab of the printer driver, you can use the machine as a monochrome printer. • Copying If the paper type is set to `Plain Paper` you can make copies in monochrome. • Faxing If the paper type is set to `Plain Paper`, the machine will receive and print the faxes in monochrome.	Replace the ink cartridges. See *Related Information*: *Replace the Ink Cartridges*. Although the Cause column lists options for using the machine after this error appears, you may not be able to use the machine until you replace the ink cartridge(s) under the following conditions: • If you unplug the machine or remove the ink cartridge. • If you select the **Slow Drying Paper** option on the machine or in the printer driver.

Error Message	Cause	Action
Cannot Detect	You installed a new ink cartridge too quickly and the machine did not detect it.	Take out the new ink cartridge and reinstall it slowly and firmly until it locks into place. See *Related Information*: *Replace the Ink Cartridges*.
	An ink cartridge is not installed correctly.	
	A used ink cartridge was reinstalled.	Remove the used ink cartridge and install a new one.
	If you are using non Brother Original ink, the machine may not detect the ink cartridge.	Replace the cartridge with a Brother Original ink cartridge. If the error message remains, contact Brother customer service or your local Brother dealer.
	The ink cartridge must be replaced.	Replace the cartridge with a Brother Original ink cartridge.
	The new ink cartridge has an air bubble.	Slowly turn the ink cartridge so that the ink supply port is pointing downwards, and then reinstall the cartridge.
	The wrong Brother model ink cartridge was installed.	Check the model numbers of the ink cartridges and install the correct ink cartridges.
Comm.Error	Poor telephone line quality caused a communication error.	Send the fax again or connect the machine to another telephone line. If the problem continues, contact the telephone company and ask them to check your telephone line.
Connection Error	Other devices are trying to connect to the Wi-Fi Direct network at the same time.	Make sure there are no other devices trying to connect to the Wi-Fi Direct network, and then try to configure the Wi-Fi Direct settings again.
Connection Failed	The Brother machine and your mobile device cannot communicate during the Wi-Fi Direct network configuration.	• Move the mobile device closer to your Brother machine. • Move your Brother machine and the mobile device to an obstruction-free area. • If you are using the PIN Method of WPS, make sure you have entered the correct PIN.
Cover is Open.	The scanner cover is not locked in the closed position.	Lift the scanner cover and then close it again.
		Make sure the telephone line cord and interface cable (if used) have been guided correctly through the cable channel and out the back of the machine.
	The ink cartridge cover is not locked in the closed position.	Firmly close the ink cartridge cover until it locks into place.
Data Remaining in Memory	Print data is left in the machine's memory.	Press ✕. The machine will cancel the job and clear it from the memory. Try to print again.
Disconnected	The other person or other person's fax machine stopped the call.	Try to send or receive again. If calls are stopped repeatedly and you are using a VoIP (Voice over IP) system, try changing the Compatibility to Basic (for VoIP). See *Related Information*: *Telephone Line Interference/VoIP*.

Error Message	Cause	Action
Document Jam/too Long	The document was not inserted or fed correctly, or the document scanned from the ADF was too long.	Remove the jammed document, and then press ✕. Set the document in the ADF correctly. See *Related Information*: *Load Documents in the Automatic Document Feeder (ADF)*. See *Related Information*: *Document Jams*.
High Temperature	The room temperature is too high.	After cooling the room, allow the machine to cool down to room temperature. Try again when the machine has cooled down.
Hub is Unusable.	A hub or USB flash drive with hub has been connected to the USB direct interface.	Hubs, including a USB flash drive with a built-in hub, are not supported. Unplug the device from the USB direct interface.
Ink Absorber NearFull	The ink absorber box or flushing box is nearly full.	The ink absorber box or flushing box must be replaced soon. Contact Brother customer service or your local Brother dealer.
Ink Absorber Pad Full	The ink absorber box or flushing box is full. These components are periodic maintenance items that may require replacement after a period of time to ensure optimum performance from your Brother machine. Because these components are periodic maintenance items, the replacement is not covered under the warranty. The need to replace these items and the time period before replacement is dependent on the number of purges and flushes required to clean the ink system. These boxes acquire amounts of ink during the different purging and flushing operations. The number of times a machine purges and flushes for cleaning varies depending on different situations. For example, frequently powering the machine on and off will cause numerous cleaning cycles since the machine automatically cleans upon power up. The use of non-Brother ink may cause frequent cleanings because non-Brother ink could cause poor print quality which is resolved by cleaning. The more cleaning the machine requires, the faster these boxes will fill up. **Repairs resulting from the use of non-Brother supplies may not be covered under the stated product warranty.**	The ink absorber box or flushing box must be replaced. Contact Brother customer service or your local Brother Authorised Service Centre to have your machine serviced. Reasons for cleaning are: 1. The machine automatically cleans itself after you remove the power cord and plug it back in. 2. After a paper jam has been cleared, the machine automatically cleans itself before the next received page is printed. 3. The machine automatically cleans itself after sitting idle for more than 30 days (infrequent use). 4. The machine automatically cleans itself after ink cartridges of the same colour have been replaced 12 times.
Ink Low	One or more of the ink cartridges are near the end of their lives. If the sending machine has the ability to convert it, the colour fax will be printed at your machine as a monochrome fax.	Order a new ink cartridge. You can continue printing until the touchscreen displays Replace Ink. See *Related Information*: *Replace the Ink Cartridges*. • **You can still scan even if the ink is low or needs to be replaced.**
Install Ink	An ink cartridge is not installed correctly.	Remove the new ink cartridge and re-install it slowly and firmly until it locks into place.

Error Message	Cause	Action
		See *Related Information*: *Replace the Ink Cartridges*.
Jam Front/Rear Jam Front Jam Rear Jam MP Tray Jam Front/MP Tray Jam Tray2 Repeat Jam XX	The paper is jammed in the machine.	Remove the jammed paper. See *Related Information*: *Printer Jam or Paper Jam*.
		If there is a repeat paper jam, try another paper jam clear operation. See *Related Information*: *Remove Paper Scraps*.
	The paper guides are not set to the correct paper size.	Make sure the paper guides are set to the correct paper size.
	The machine's paper support is not set correctly.	Make sure the paper support is fully inserted into the machine. See *Related Information*: *Paper is Jammed in the Front of the Machine*.
	Paper dust has accumulated on the surface of the paper pick-up rollers.	Clean the paper pick-up rollers. See *Related Information*: *Clean the Paper Pick-up Rollers*.
Low Temperature	The room temperature is too low.	After warming the room, allow the machine to warm up to room temperature. Try again when the machine has warmed up.
Media is Full.	The USB flash drive you are using already contains 999 files.	Your machine can only save to your USB flash drive if it contains fewer than 999 files. Delete unused files and try again.
	The USB flash drive you are using does not have enough free space to scan the document.	Delete unused files from your USB flash drive to make some free space, and then try again.
No Caller ID	There is no incoming call history. You did not receive calls or you have not subscribed to the Caller ID service from your telephone company.	To use the Caller ID feature, contact your telephone company. See *Related Information*: *Caller ID*.
No Device	When configuring the Wi-Fi Direct network, the Brother machine cannot find your mobile device.	• Make sure your machine and mobile device are in the Wi-Fi Direct mode. • Move the mobile device closer to your Brother machine. • Move your Brother machine and the mobile device to an obstruction-free area. • If you are manually configuring the Wi-Fi Direct network, make sure you have entered the correct password. • If your mobile device has a configuration page for how to obtain an IP address, make sure the IP address of your mobile device has been configured via DHCP.
No File	The USB flash drive in the media drive does not contain a .JPG file.	Put the correct USB flash drive into the slot again.
No Paper Fed No Paper Fed [Tray #1] No Paper Fed [MP Tray]	The machine is out of paper or paper is not correctly loaded in the paper tray.	Do one of the following: • Refill the paper tray, and then follow the LCD instructions. • Remove and reload the paper, and then follow the LCD instructions.

Error Message	Cause	Action
No Paper Fed [Tray #2]		See *Related Information*: *Load Paper*.
	The paper was not inserted in the centre position of the MP tray.	Remove the paper and reinsert it in the centre of the MP tray, and then follow the LCD instructions. See *Related Information*: *Load Paper in the Multi-purpose Tray (MP Tray)*.
	The Jam Clear Cover is not closed correctly.	Make sure the Jam Clear Cover is closed evenly at both ends. See *Related Information*: *Printer Jam or Paper Jam*.
	Paper dust has accumulated on the surface of the paper pick-up rollers.	Clean the paper pick-up rollers. See *Related Information*: *Clean the Paper Pick-up Rollers*.
No Response/Busy	The number you dialled does not answer or is busy.	Verify the number and try again.
Out of Fax Memory	The fax memory is full.	Do one of the following: • Clear the data from the memory. To gain extra memory, you can turn off Memory Receive. See *Related Information*: *Turn Off Memory Receive*. • Print the faxes that are in the memory. See *Related Information*: *Print a Fax Stored in the Machine's Memory*.
Out of Memory	The machine's memory is full.	**If a fax-sending or copy operation is in progress:** • Press ✕ or Quit or Close and wait until the other operations that are in progress finish, and then try again. • Press Send Now to send the pages scanned so far. • Press Partial Print to copy the pages scanned so far. • Clear the data in the memory. To gain extra memory, you can turn Memory Receive off. See *Related Information*: *Turn Off Memory Receive*. • Print the faxes stored in the memory. See *Related Information*: *Print a Fax Stored in the Machine's Memory*.
Paper Size Mismatch Paper Size Mismatch [Tray #1] Paper Size Mismatch [MP Tray] Paper Size Mismatch [Tray #2]	The paper size setting does not match the size of paper in the tray. -**OR**- The paper orientation is not proper for the paper size. -**OR**- You did not set the paper guides in the tray to the indicators for the paper size you are using.	1. Check that the paper size you selected on the machine's display matches the size of the paper in the tray. See *Related Information*: *Change the Paper Size and Paper Type*. 2. Make sure you loaded the paper in the proper orientation and set the paper guides at the indicators for your paper size. See *Related Information*: *Load Paper*. 3. After you have checked the paper size and the paper orientation, follow the LCD instructions.

Error Message	Cause	Action
		If printing from your computer, make sure the paper size you selected in the printer driver matches the size of paper in the tray. See *Related Information*: *Print Settings (Windows)* or *Print Options (Mac)*.
`Paper Tray #1 not detected` `Paper Tray #2 not detected`	The paper tray is not completely inserted.	Slowly push the paper tray completely into the machine.
	Paper or a foreign object has prevented the paper tray from being inserted properly.	Pull the paper tray out of the machine, and remove the jammed paper or foreign object. If you cannot find or remove the jammed paper, see *Related Information*: *Printer Jam or Paper Jam*.
`Repetitive No Paper Fed`	Paper dust has accumulated on the surface of the paper pick-up rollers.	Clean the paper pick-up rollers. See *Related Information*: *Clean the Paper Pick-up Rollers*.
`Repetitive Paper Jams`	A foreign object, such as a paper clip or a piece of ripped paper, is in the machine.	Remove any foreign objects and paper scraps in the machine. See *Related Information*: *Remove Paper Scraps*.
`Replace Ink`	One or more of the ink cartridges have reached the end of their lives. The machine will stop all print operations. While memory is available, monochrome faxes will be stored in the memory. If the sending machine has the ability to convert it, the colour fax will be stored in the memory as a monochrome fax.	Replace the ink cartridges. See *Related Information*: *Replace the Ink Cartridges*. • **You can still scan even if the ink is low or needs to be replaced.**
`Sending Error` `Wrong Document Size Settings`	The document size option does not match the size of your fax document.	Select the correct document size option, and then press `Fax Start` again.
`The maximum number of devices are already connected using Wi-Fi Direct.`	Two mobile devices are already connected to the Wi-Fi Direct network when the Brother machine is the Group Owner (G/O).	After the current connection between your Brother machine and another mobile device has shut down, try to configure the Wi-Fi Direct settings again. You can confirm the connection status by printing the Network Configuration Report. See *Related Information*: *Print the Network Configuration Report*.
`Touchscreen Initialisation Failed`	The touchscreen was pressed before the power on initialisation was completed.	Make sure nothing is touching or resting on the touchscreen, especially when plugging the machine in.
	Debris may be stuck between the lower part of the touchscreen and its frame.	Insert a piece of stiff paper between the lower part of the touchscreen and its frame and slide it back and forth to push out the debris.

`Tray #1 Settings`
`Tray #2 Settings`
`MP Tray Settings`
	This message is displayed when the setting to confirm the paper type and size is enabled.	To not display this confirmation message, change the setting to Off.
		See *Related Information*: *Change the Check Paper Size Setting*.

`Unable to Clean XX`
`Unable to Initialize XX`
`Unable to Print XX`
	The machine has a mechanical problem.
	-**OR**-
	A foreign object, such as a paper clip or a piece of ripped paper, is in the machine.
		Open the scanner cover and remove any foreign objects and paper scraps from inside the machine. If the error message continues, disconnect the machine from the power for several minutes, and then reconnect it.

Error Message	Cause	Action
		You can try additional paper jam clear operations. See *Related Information*: *Remove Paper Scraps*. (If you cannot print received faxes, transfer them to another fax machine or to your computer.) See *Related Information*: *Transfer Your Faxes or Fax Journal Report*.
`Unable to Scan XX`	The machine has a mechanical problem.	Disconnect the machine from the power for several minutes, and then reconnect it. (If you cannot print received faxes, transfer them to another fax machine or to your computer.) See *Related Information*: *Transfer Your Faxes or Fax Journal Report*.
`Unusable Device` `Disconnect device from front connector & turn machine off & then on`	A broken device is connected to the USB direct interface.	Unplug the device from the USB direct interface, then press ⏻ to turn the machine off and then on again.
`Unusable Device` `Please disconnect USB device.`	A USB device or USB flash drive that is not supported has been connected to the USB direct interface.	Unplug the device from the USB direct interface. Turn the machine off and then on again.
`Wrong Tray Settings`	The machine's Paper Size and Tray Use settings do not match the size of paper in the tray you are using.	Follow the instructions on the touchscreen and try to print again.
		Configure the paper size setting for the tray according to the LCD instructions.

Related Information

- Troubleshooting
- Transfer Your Faxes or Fax Journal Report
- Error Messages When Using the Brother Web Connect Feature
- Touchscreen LCD Overview
- Print the Network Configuration Report
- Replace the Ink Cartridges
- Change the Check Paper Size Setting
- Telephone Line Interference/VoIP
- Load Documents in the Automatic Document Feeder (ADF)
- Document Jams
- Caller ID
- Load Paper
- Load Paper in the Manual Feed Slot
- Printer Jam or Paper Jam
- Paper is Jammed in the Front of the Machine
- Remove Paper Scraps
- Clean the Paper Pick-up Rollers
- Turn Off Memory Receive
- Print a Fax Stored in the Machine's Memory

- Change the Paper Size and Paper Type
- Print Settings (Windows)
- Print Options (Mac)
- Load Paper in the Multi-purpose Tray (MP Tray)
- Paper Handling and Printing Problems

Transfer Your Faxes or Fax Journal Report

If the LCD shows:

- `[Unable to Clean XX]`
- `[Unable to Initialize XX]`
- `[Unable to Print XX]`
- `[Unable to Scan XX]`

We recommend transferring your faxes to another fax machine or to your computer.

See *Related Information*: *Transfer Faxes to Another Fax Machine*.

See *Related Information*: *Transfer Faxes to Your Computer*.

You can also transfer the Fax Journal report to see if there are any faxes you must transfer.

See *Related Information*: *Transfer the Fax Journal Report to Another Fax Machine*.

Related Information

- Error and Maintenance Messages
- Transfer Faxes to Another Fax Machine
- Transfer Faxes to Your Computer
- Transfer the Fax Journal Report to Another Fax Machine
- Use PC-Fax Receive to Transfer Received Faxes to Your Computer (Windows only)
- Reset the Network Settings to Factory Default
- Reset Your Brother Machine
- Reset Functions Overview
- Paper is Jammed in the Front of the Machine
- Paper is Jammed in the Back of the Machine

Transfer Faxes to Another Fax Machine

If you have not set up your Station ID, you cannot enter Fax Transfer mode.

>> MFC-J3530DW
>> MFC-J3930DW

MFC-J3530DW

1. Press to interrupt the error temporarily.
2. Press [Settings] > [All Settings] > [Service] > [Data Transfer] > [Fax Transfer].
3. Do one of the following:
   - If the touchscreen displays [No Data], there are no faxes left in the machine's memory.

     Press [Close], and then press .
   - Enter the fax number where faxes will be forwarded.
4. Press [Fax Start].

MFC-J3930DW

1. Press to interrupt the error temporarily.
2. Press [Settings] > [All Settings] > [Service] > [Data Transfer] > [Fax Transfer].
3. Do one of the following:
   - If the touchscreen displays [No Data], there are no faxes left in the machine's memory.

     Press [Close], and then press .
   - Enter the fax number where faxes will be forwarded.
4. Press [Fax Start].

Related Information

- Transfer Your Faxes or Fax Journal Report
- Set Your Station ID

Transfer Faxes to Your Computer

You can transfer the faxes from your machine's memory to your computer.

>> MFC-J3530DW
>> MFC-J3930DW

MFC-J3530DW

1. Press to interrupt the error temporarily.
2. Make sure you have installed the Brother software and drivers on your computer, and then turn on **PC-FAX Receive** on the computer. Do one of the following:
   - Windows Vista and Windows 7

     From the (**Start**) menu, select **All Programs** > **Brother** > **Brother Utilities**.

     Click the drop-down list and select your model name (if not already selected). Click **PC-FAX** in the left navigation bar, and then click **Receive**.
   - Windows 8 and Windows 10

     Click (**Brother Utilities**), and then click the drop-down list and select your model name (if not already selected). Click **PC-FAX** in the left navigation bar, and then click **Receive**.
3. Read and confirm the instructions on your computer.

   Faxes in the machine's memory will be sent to your computer automatically.

When faxes in the machine's memory are not sent to your computer:

Make sure you have set `[PC Fax Receive]` on the machine.

If faxes are in the machine's memory when you set up PC-Fax Receive, the touchscreen will ask if you want to transfer the faxes to your computer. If Fax Preview is set to Off, you will be asked if you want to print backup copies.

Press `[Yes]` to transfer all faxes in the memory to your computer.

MFC-J3930DW

1. Press to interrupt the error temporarily.
2. Make sure you have installed the Brother software and drivers on your computer, and then turn on **PC-FAX Receive** on the computer. Do one of the following:
   - Windows Vista and Windows 7

     From the (**Start**) menu, select **All Programs** > **Brother** > **Brother Utilities**.

     Click the drop-down list and select your model name (if not already selected). Click **PC-FAX** in the left navigation bar, and then click **Receive**.
   - Windows 8 and Windows 10

     Click (**Brother Utilities**), and then click the drop-down list and select your model name (if not already selected). Click **PC-FAX** in the left navigation bar, and then click **Receive**.
3. Read and confirm the instructions on your computer.

   Faxes in the machine's memory will be sent to your computer automatically.

When faxes in the machine's memory are not sent to your computer:

Make sure you have set [PC Fax Receive] on the machine.

If faxes are in the machine's memory when you set up PC-Fax Receive, the touchscreen will ask if you want to transfer the faxes to your computer. If Fax Preview is set to Off, you will be asked if you want to print backup copies.

Press [Yes] to transfer all faxes in the memory to your computer.

Related Information

- Transfer Your Faxes or Fax Journal Report
- Use PC-Fax Receive to Transfer Received Faxes to Your Computer (Windows only)

Transfer the Fax Journal Report to Another Fax Machine

If you have not set up your Station ID, you cannot enter fax transfer mode.

>> MFC-J3530DW
>> MFC-J3930DW

MFC-J3530DW

1. Press to interrupt the error temporarily.
2. Press [Settings] > [All Settings] > [Service] > [Data Transfer] > [Report Transfer].
3. Enter the fax number where the Fax Journal report will be forwarded.
4. Press [Fax Start].

MFC-J3930DW

1. Press to interrupt the error temporarily.
2. Press [Settings] > [All Settings] > [Service] > [Data Transfer] > [Report Transfer].
3. Enter the fax number where the Fax Journal report will be forwarded.
4. Press [Fax Start].

Related Information

- Transfer Your Faxes or Fax Journal Report
- Set Your Station ID

Error Messages When Using the Brother Web Connect Feature

Your Brother machine displays an error message if an error occurs. The most common error messages are shown in the following chart.

You can correct most errors yourself. If, after reading this table, you still need help, the Brother Solutions Center offers the latest FAQs and troubleshooting tips.

Visit us at support.brother.com.

Connection Error

Error Messages	Cause	Action

(MFC-J3530DW)
`Connection Error 02`
`Network is not connected. Check that the machine is connected to the network.`
(MFC-J3930DW)
`Connection Error 02`
`Network is not connected. Check that the machine is connected to the network.`
	The machine is not connected to a network.	• Verify that the network connection is good.
		• If the `Web` or `Apps` option was pressed soon after the machine was turned on, the network connection may not have been established yet. Wait and try again.

(MFC-J3530DW)
`Connection Error 03`
`Connection failed to server. Check network settings.`
(MFC-J3930DW)
`Connection Error 03`
`Connection failed to server. Check network settings.`
	• Network or server settings are incorrect.
	• There is a problem with the network or server.
		• Confirm that network settings are correct, or wait and try again later.
		• If the `Web` or `Apps` option was pressed soon after the machine was turned on, the network connection may not have been established yet. Wait and try again.

(MFC-J3530DW)
`Connection Error 07`
`Connection failed to server. Set the correct Date&Time.`
(MFC-J3930DW)
`Connection Error 07`
`Connection failed to server. Set the correct Date&Time.`
	Date and time settings are incorrect.	Set the date and time correctly. Note that if the machine's power cord is disconnected, the date and time settings may have reset to factory settings.

Authentication Error

Error Messages	Cause	Action
Authentication Error 01 Incorrect PIN code. Enter PIN correctly.	The PIN you entered to access the account is incorrect. The PIN is the four-digit number that was entered when registering the account to the machine.	Enter the correct PIN.
Authentication Error 02 Incorrect or expired ID, or this temporary ID is already used. Enter correctly or reissue temporary ID. Temporary ID is valid for 24 hours after it is issued.	The temporary ID that was entered is incorrect .	Enter the correct temporary ID.
	The temporary ID that was entered has expired. A temporary ID is valid for 24 hours.	Apply for Brother Web Connect access again and receive a new temporary ID, and then use the new ID to register the account to the machine.
Authentication Error 03 Display name has already been registered. Enter another display name.	The name you entered as the display name has already been registered to another service user.	Enter a different display name.

Server Error

Error Messages	Cause	Action
Server Error 01 Authentication failed. Do the following: 1. Go to http://bwc.brother.com to get a new temporary ID. 2. Press OK and enter your new temporary ID in the next screen.	The machine's authentication information (needed to access the service) has expired or is invalid.	Apply for Brother Web Connect access again to receive a new temporary ID, and then use the new ID to register the account to the machine.
Server Error 03 Failed to upload. Unsupported file or corrupt data. Confirm data of file.	The file you are trying to upload may have one of the following problems: • The file exceeds the service's limit on number of pixels, file size, etc. • The file type is not supported. • The file is corrupted.	The file cannot be used: • Check the service's size or format restrictions. • Save the file as a different type. • If possible, get a new, uncorrupted version of the file.
Server Error 13 Service temporarily unavailable. Try again later.	There is a problem with the service and it cannot be used now.	Wait and try again. If you get the message again, access the service from a computer to confirm if it is unavailable.

Shortcut Error

Error Messages	Cause	Action
Shortcut Error 02 Account is invalid. Please register account and shortcut again after deleting this shortcut.	The shortcut cannot be used because the account was deleted after the shortcut was registered.	Delete the shortcut, and then register the account and shortcut again.

Related Information

- Error and Maintenance Messages

Document Jams

- Document is Jammed in the Top of the ADF Unit
- Document is Jammed in the Bottom of the ADF Unit
- Document is Jammed inside the ADF Unit
- Remove Paper Scraps Jammed in the ADF
- Error and Maintenance Messages

Document is Jammed in the Top of the ADF Unit

1. Remove any paper that is not jammed from the ADF.
2. Open the ADF cover.
3. Remove the jammed document by pulling it upwards.

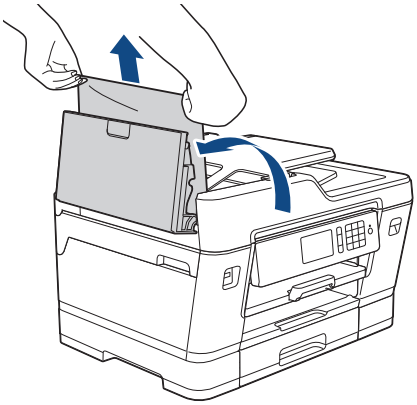

4. Close the ADF cover.
5. Press ✕.

IMPORTANT

To avoid future document jams, close the ADF cover correctly by pressing it down in the centre.

Related Information

- Document Jams

Document is Jammed in the Bottom of the ADF Unit

1. Remove any paper that is not jammed from the ADF.
2. Lift the ADF document support, and remove the jammed paper.

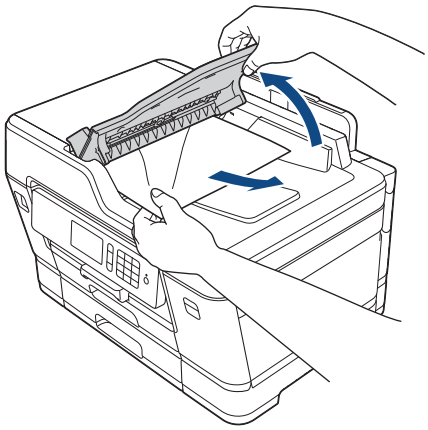

3. Press ✕.

Related Information

- Document Jams

Document is Jammed inside the ADF Unit

1. Remove any paper that is not jammed from the ADF.
2. Lift the document cover.
3. Pull the jammed document out to the right.

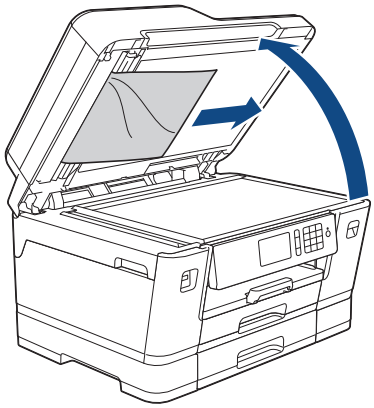

4. Close the document cover.
5. Press .

Related Information

- Document Jams

Remove Paper Scraps Jammed in the ADF

1. Lift the document cover.
2. Insert a piece of stiff paper, such as cardstock, into the ADF to push any small paper scraps through.

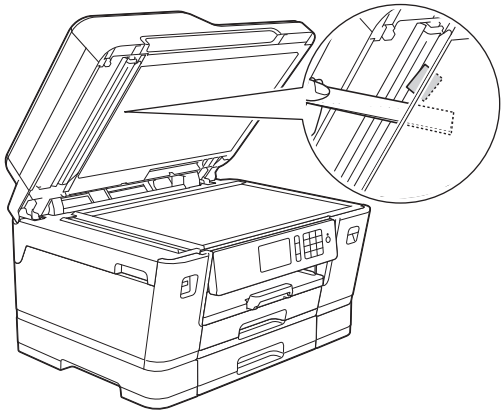

3. Close the document cover.
4. Press .

Related Information

- Document Jams

Printer Jam or Paper Jam

Locate and remove the jammed paper.

- Paper is Jammed in the Front of the Machine
- Paper is Jammed in the Back of the Machine
- Remove Paper Scraps
- Error and Maintenance Messages
- Paper Handling and Printing Problems

Paper is Jammed in the Front of the Machine

If the LCD displays the following paper jam messages, follow these steps:

- [Jam Front/Rear], [Repeat Jam Front/Rear]
- [Jam Front], [Repeat Jam Front]
- [Jam Front/MP Tray], [Repeat Jam Front/MP Tray]
- [Jam Front/Manual Feed Slot], [Repeat Jam Front/Manual Feed]

1. Unplug the machine from the electrical socket.
2. If the paper is loaded in the MP tray, remove the paper. (MFC-J3930DW)
3. Pull Tray #1 (1) completely out of the machine as shown by the arrow.

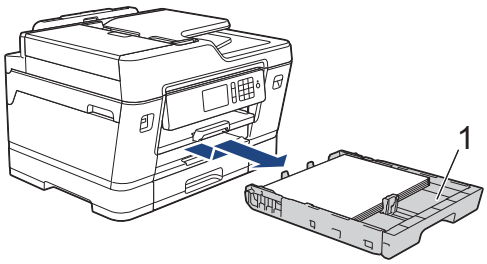

If your LCD error message was repeat paper jam messages, for example [Repeat Jam Front/Rear], lift the paper support (1), and then pull it at an angle completely out of the machine as shown by the arrow.

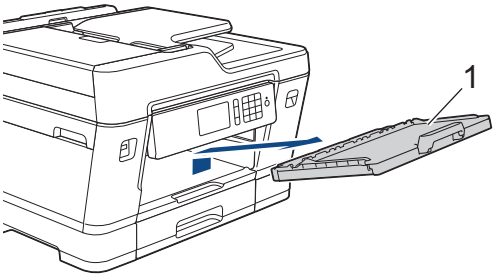

When finished, continue with the next step.

4. Slowly pull out the jammed paper (1).

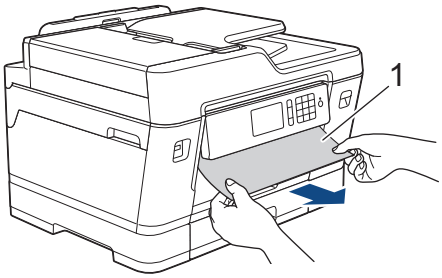

If your LCD error message was repeat paper jam messages, for example `[Repeat Jam Front/Rear]`, do the following:

a. Lift the Jam Clear Flap, and remove the jammed paper.

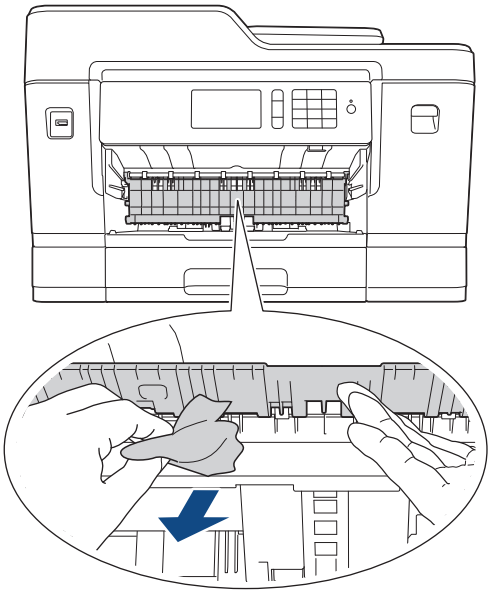

b. Make sure you look carefully inside (1) for any scraps of paper.

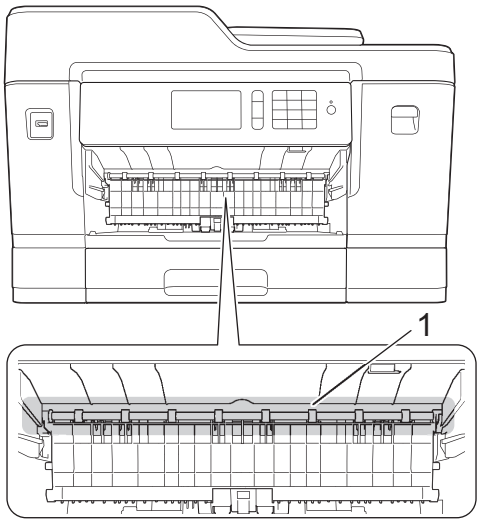

When finished, continue with the next step.

5. Using both hands, use the finger holds on each side of the machine to lift the scanner cover (1) into the open position.

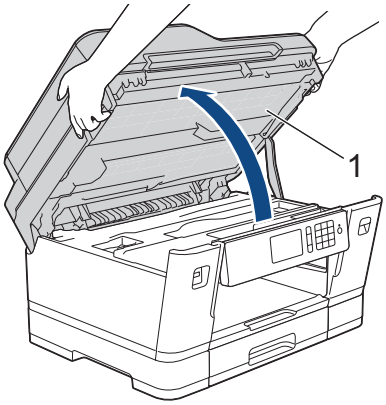

6. Slowly pull the jammed paper (1) out of the machine.

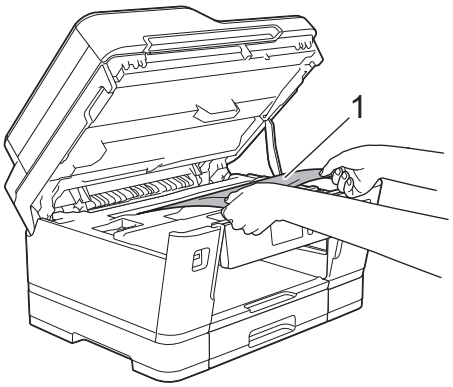

If your LCD error message was repeat paper jam messages, for example `[Repeat Jam Front/Rear]`, move the print head (if necessary) to take out any paper remaining in this area. Make sure pieces of paper are not left in the corners of the machine (1) and (2).

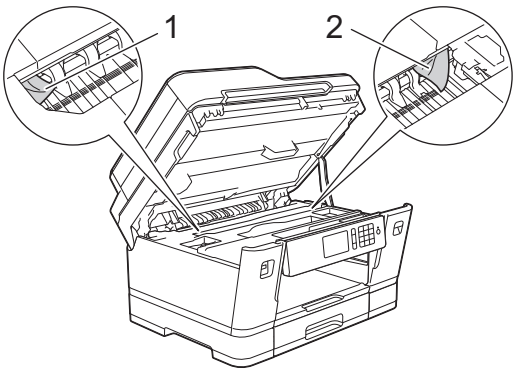

When finished, continue with the next step.

IMPORTANT

- If the print head is in the right corner as shown in the illustration, you cannot move the print head. Close the scanner cover, and then reconnect the power cord. Open the scanner cover again, and then hold down ✕ until the print head moves to the centre. Then unplug the machine from the power source and take out the paper.

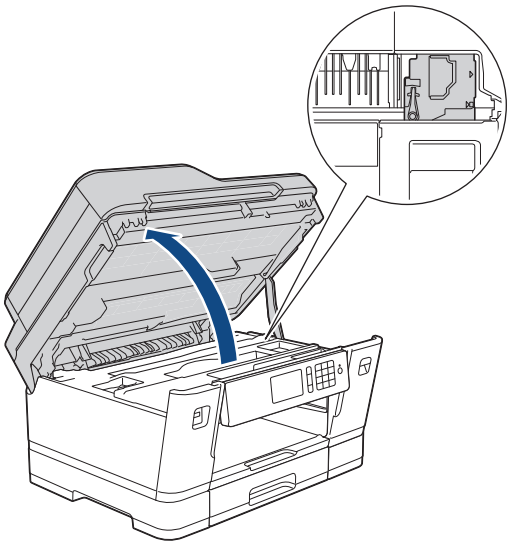

- If the paper is jammed under the print head, unplug the machine from the power source, and then move the print head to take out the paper.
- If ink gets on your skin or clothing, immediately wash it off with soap or detergent.

7. Gently close the scanner cover using the finger holds on each side.

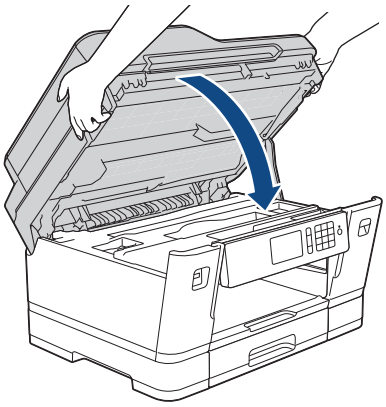

8. If your LCD error message was `[Jam Front/Rear]` or `[Repeat Jam Front/Rear]`, do the following:
   a. Open the Jam Clear Cover (1) at the back of the machine.

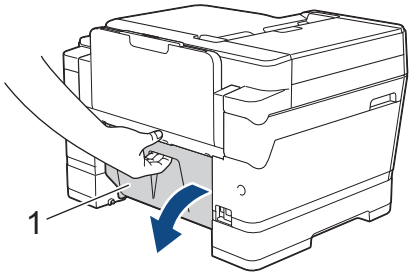

   b. Make sure you look carefully inside for jammed paper and slowly pull it out of the machine.

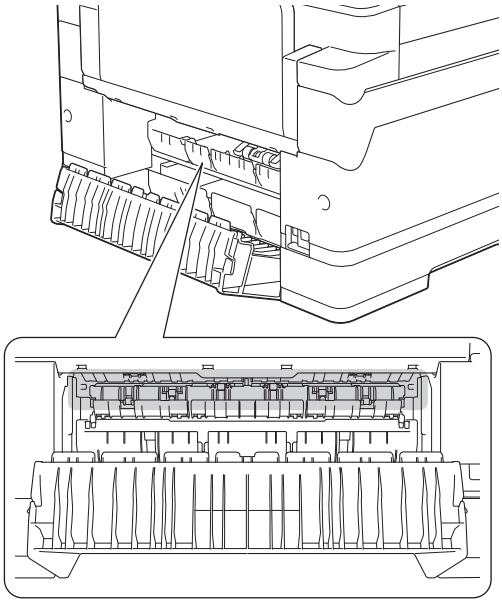

   c. Close the Jam Clear Cover. Make sure the cover is closed completely.

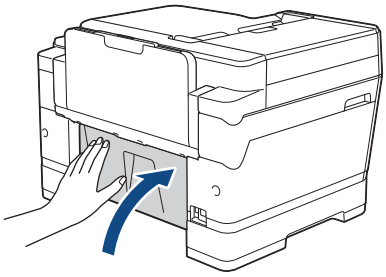

9. If your LCD error message was `[Jam Front/MP Tray]` or `[Repeat Jam Front/MP Tray]`, make sure you look carefully inside the MP tray for jammed paper. Push the release lever (1) towards the back of the machine, and then slowly pull the jammed paper out of the MP tray.

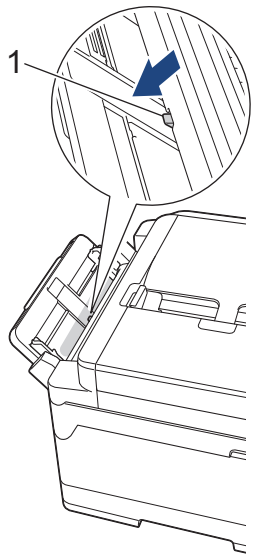

10. If your LCD error message was `[Jam Front/Manual Feed Slot]` or `[Repeat Jam Front/Manual Feed]`, make sure you look carefully inside the manual feed slot for jammed paper and slowly pull it out of the machine.

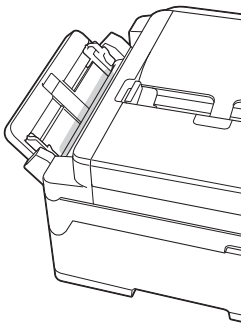

11. If your LCD error message was repeat paper jam messages, for example `[Repeat Jam Front/Rear]`, and you removed the paper support, put it firmly back in the machine. Make sure you fit the paper support into the channels.

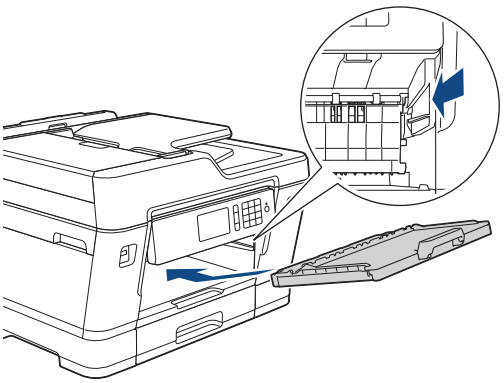

12. Slowly push Tray #1 completely into the machine.

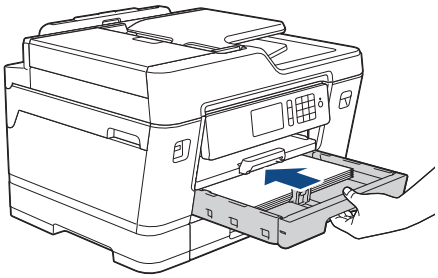

13. Reconnect the power cord.

If there is a repeat paper jam, a small piece of paper may be stuck in the machine. See *Related Information*: *Remove Paper Scraps*.

Related Information

- Printer Jam or Paper Jam
- Transfer Your Faxes or Fax Journal Report
- Error and Maintenance Messages
- Remove Paper Scraps

Paper is Jammed in the Back of the Machine

If the LCD displays the following paper jam messages, follow these steps:

- [Jam Rear], [Repeat Jam Rear]
- [Jam MP Tray], [Repeat Jam MP Tray]
- [Jam Manual Feed Slot], [Repeat Jam Manual Feed Slot]
- [Jam Tray2], [Repeat Jam Tray2]

1. Unplug the machine from the electrical socket.
2. If the paper is loaded in the MP tray, remove the paper. (MFC-J3930DW)
3. Pull Tray #1 (1) completely out of the machine as shown by the arrow.

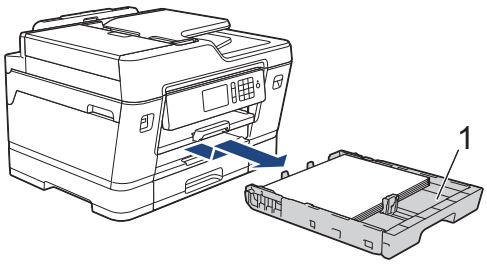

(MFC-J3930DW)

If your LCD error message was [Jam Tray2] or [Repeat Jam Tray2], also pull Tray #2 (2) completely out of the machine as shown by the arrow.

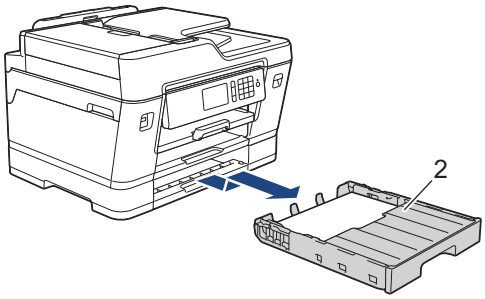

When finished, continue with the next step.

4. If your LCD error message was [Jam Rear], [Repeat Jam Rear], [Jam Tray2] or [Repeat Jam Tray2], do the following:
   a. Open the Jam Clear Cover (1) at the back of the machine.

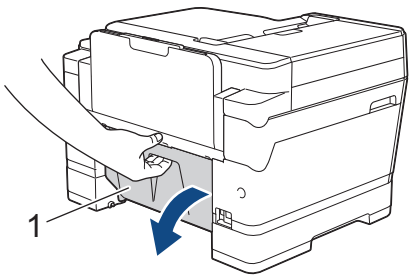

   b. Slowly pull the jammed paper out of the machine.

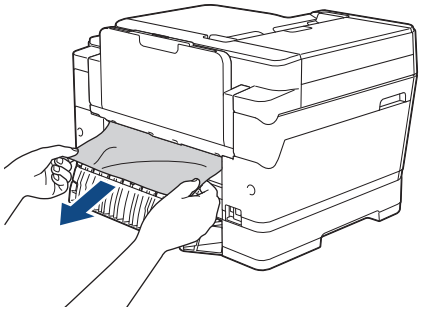

c. Close the Jam Clear Cover. Make sure the cover is closed completely.

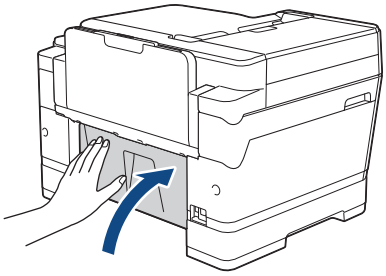

5. If your LCD error message was `[Jam MP Tray]` or `[Repeat Jam MP Tray]`, push the release lever (1) towards the back of the machine, and then slowly pull the jammed paper out of the MP tray.

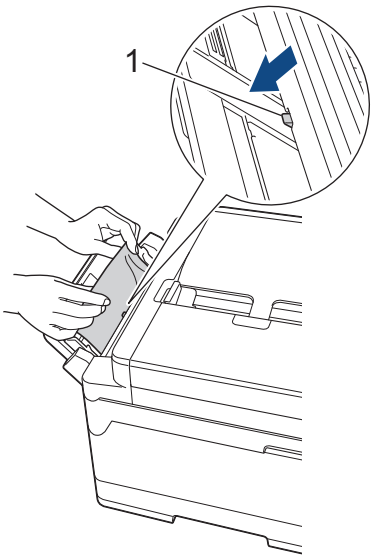

6. If your LCD error message was `[Jam Manual Feed Slot]` or `[Repeat Jam Manual Feed Slot]`, slowly pull the jammed paper out of the manual feed slot.

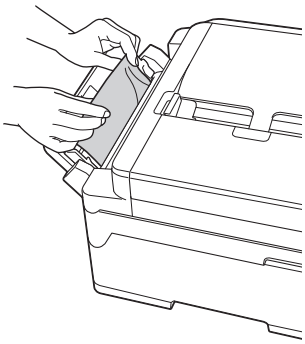

7. Using both hands, use the finger holds on each side of the machine to lift the scanner cover (1) into the open position.

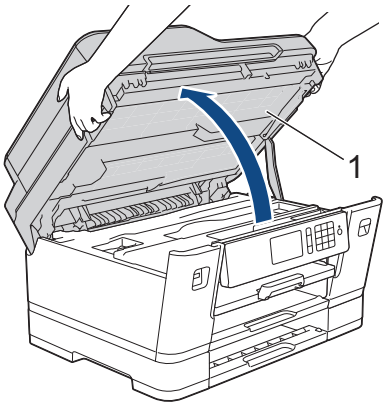

8. Slowly pull the jammed paper (1) out of the machine.

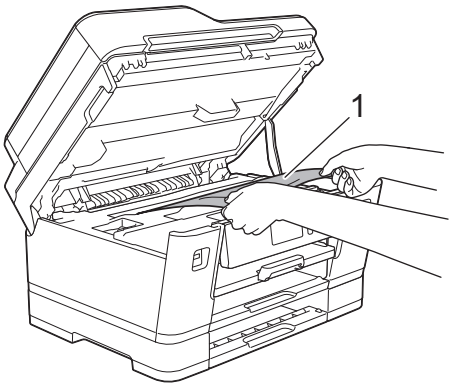

If your LCD error message was repeat paper jam messages, for example `[Repeat Jam Rear]`, move the print head (if necessary) to take out any paper remaining in this area. Make sure pieces of paper are not left in the corners of the machine (1) and (2).

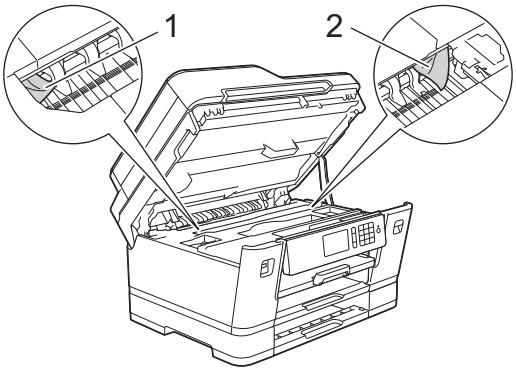

When finished, continue with the next step.

IMPORTANT

- If the print head is in the right corner as shown in the illustration, you cannot move the print head. Close the scanner cover, and then reconnect the power cord. Open the scanner cover again, and then hold down ✕ until the print head moves to the centre. Then unplug the machine from the power source and take out the paper.

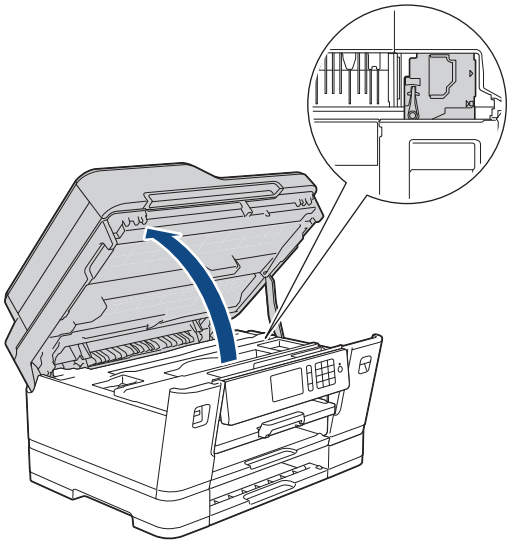

- If the paper is jammed under the print head, unplug the machine from the power source, and then move the print head to take out the paper.
- If ink gets on your skin or clothing, immediately wash it off with soap or detergent.

9. Gently close the scanner cover using the finger holds on each side.

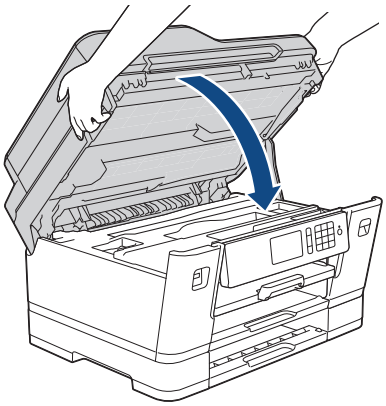

10. (MFC-J3530DW) Slowly push Tray #1 completely into the machine.

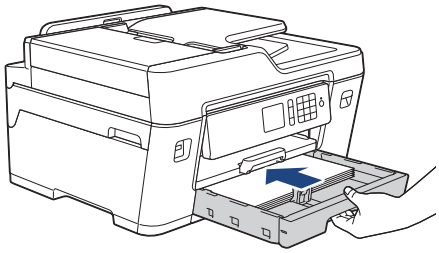

(MFC-J3930DW) Slowly push Tray #1 and Tray #2 (if removed) completely into the machine.

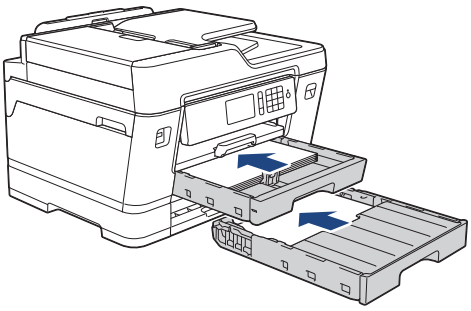

11. Reconnect the power cord.

If there is a repeat paper jam, a small piece of paper may be stuck in the machine.
See *Related Information*: *Remove Paper Scraps*.

Related Information

- Printer Jam or Paper Jam
- Transfer Your Faxes or Fax Journal Report
- Remove Paper Scraps

Remove Paper Scraps

>> MFC-J3530DW
>> MFC-J3930DW

MFC-J3530DW

1. If you repeatedly experience paper jams (3 times or more), the LCD displays a message asking if you want to remove the scraps.

   Press [Yes] to return to the Home screen.

2. Press [Settings] > [Maintenance] > [Remove Paper Scraps].
3. Follow the instructions on the LCD to locate and remove the jammed paper.

During the procedure, you must load the Maintenance sheet (included with your machine) in Landscape orientation in the manual feed slot. (If you do not have the Maintenance sheet, use one sheet of A4 or Letter size thicker paper, such as glossy paper.)

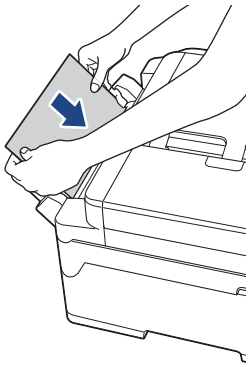

MFC-J3930DW

1. If you repeatedly experience paper jams (3 times or more), the LCD displays a message asking if you want to remove the scraps.

   Press [Yes] to return to the Home screen.

2. Press [Settings] > [Maintenance] > [Remove Paper Scraps].
3. Follow the instructions on the LCD to locate and remove the jammed paper.

Related Information

- Printer Jam or Paper Jam
- Error and Maintenance Messages
- Paper Handling and Printing Problems
- Paper is Jammed in the Front of the Machine
- Paper is Jammed in the Back of the Machine

If You Are Having Difficulty with Your Machine

For technical help, you must contact Brother customer support.

If you think there is a problem with your machine, check the following topics. You can correct most problems yourself.

If you need additional help, the Brother Solutions Center offers the latest FAQs and troubleshooting tips.

Visit support.brother.com.

Using non-Brother supplies may affect the print quality, hardware performance, and machine reliability.

- Paper Handling and Printing Problems
- Telephone and Fax problems
- Other Problems
- Network Problems
- AirPrint Problems

Paper Handling and Printing Problems

Printing Difficulties

Difficulties	Suggestions
No printout	Check that the correct printer driver has been installed and selected.
	Check to see if the machine's display is showing an error message. See *Related Information*: *Error and Maintenance Messages*.
	Check that the machine is online: • Windows Vista and Windows Server 2008 Click /**Start** > **Control Panel** > **Hardware and Sound** > **Printers**. Right-click **Brother MFC-XXXX Printer** (where XXXX is your model name). Make sure **Use Printer Online** is not listed. If it is listed, click this option to set the driver Online. • Windows 7 and Windows Server 2008 R2 Click /**Start** > **Devices and Printers** . Right-click **Brother MFC-XXXX Printer** (where XXXX is your model name) and click **See what's printing**. Click **Printer** in the menu bar. Make sure **Use Printer Offline** is not selected. • Windows 8 Move your mouse to the lower right corner of your desktop. When the menu bar appears, click **Settings** > **Control Panel**. In the **Hardware and Sound** group, click **View devices and printers**. Right-click the **Brother MFC-XXXX Printer** (where XXXX is your model name). Click **See what's printing**. If printer driver options appear, select your printer driver. Click **Printer** in the menu bar and make sure **Use Printer Offline** is not selected. • Windows 10 Click > **All apps** > **Windows System** > **Control Panel**. In the **Hardware and Sound** group, click **View devices and printers**. Right-click the **Brother MFC-XXXX Printer** (where XXXX is your model name). Click **See what's printing**. If printer driver options appear, select your printer driver. Click **Printer** in the menu bar and make sure **Use Printer Offline** is not selected. • Windows Server 2012 Move your mouse to the lower right corner of your desktop. When the menu bar appears, click **Settings** > **Control Panel**. In the **Hardware** group, click **View devices and printers**. Right-click the **Brother MFC-XXXX Printer** (where XXXX is your model name). Click **See what's printing**. If printer driver options appear, select your printer driver. Click **Printer** in the menu bar and make sure **Use Printer Offline** is not selected. • Windows Server 2012 R2 Click **Control Panel** on the **Start** screen. In the **Hardware** group, click **View devices and printers**. Right-click the **Brother MFC-XXXX Printer** (where XXXX is your model name). Click **See what's printing**. If printer driver options appear, select your printer driver. Click **Printer** in the menu bar and make sure **Use Printer Offline** is not selected.
	One or more ink cartridges have reached the end of their life. See *Related Information*: *Replace the Ink Cartridges*.
	If old, unprinted data remains in the printer driver spooler, it will prevent new print jobs from printing. Open the printer icon and delete all data as follows: • Windows Vista and Windows Server 2008 Click /**Start** > **Control Panel** > **Hardware and Sound** > **Printers**. • Windows 7 and Windows Server 2008 R2

Difficulties	Suggestions
	Click /**Start** > **Devices and Printers** > **Printers and Faxes**. • Windows 8 Move your mouse to the lower right corner of your desktop. When the menu bar appears, click **Settings** > **Control Panel**. In the **Hardware and Sound** group, click **View devices and printers** > **Printers**. • Windows 10 Click > **All apps** > **Windows System** > **Control Panel**. In the **Hardware and Sound** group, click **View devices and printers** > **Printers**. • Windows Server 2012 Move your mouse to the lower right corner of your desktop. When the menu bar appears, click **Settings** > **Control Panel**. In the **Hardware** group, click **View devices and printers** > **Printers**. • Windows Server 2012 R2 Click **Control Panel** on the **Start** screen. In the **Hardware** group, click **View devices and printers** > **Printers**. • OS X v10.9.5, 10.10.x, 10.11.x Click the **System Preferences** > **Printers & Scanners**.
The headers or footers appear when the document is displayed on the screen but do not appear when the document is printed.	There is an unprintable area on the top and bottom of the page. Adjust the top and bottom margins in your document to allow for this. See *Related Information*: *Unprintable Area*.
Cannot perform 'Page Layout' printing.	Check that the paper size setting in the application and in the printer driver are the same.
Print speed is too slow.	Try changing the printer driver setting. The highest resolution needs longer data processing, sending and printing time. Try the other quality settings in the printer driver as follows: • Windows In the printer driver, clear the **Colour Enhancement** check box on the **Advanced** tab. • Mac In the printer driver, choose **Color Settings**, click **Advanced Color Settings**, and make sure you clear the **Color Enhancement** check box.
	Turn the Borderless feature off. Borderless printing is slower than normal printing. See *Related Information*: *Print Settings (Windows)* or *Print a Photo (Mac)*.
	Turn the Quiet Mode setting off. Print speed is slower in Quiet Mode. See *Related Information*: *Reduce Printing Noise*.

Print Quality Difficulties

Difficulties	Suggestions
Poor print quality	Check the print quality. See *Related Information*: *Check the Print Quality*.
	Make sure the Media Type setting in the printer driver or the Paper Type setting in the machine's menu matches the type of paper you are using. See *Related Information*: *Change the Paper Size and Paper Type*. See *Related Information*: *Print Settings (Windows)* or *Print Options (Mac)*.
	Make sure your ink cartridges are fresh. The following may cause ink to clog: • The expiration date written on the cartridge package has passed. • The ink cartridge has been in your machine for over six months. • The ink cartridge may not have been stored correctly before use.

Difficulties	Suggestions
	Make sure you are using Brother Original ink. Brother does not recommend the use of cartridges other than Brother Original cartridges or the refilling of used cartridges with ink from other sources.
	Make sure you are using one of the recommended types of paper. See *Related Information*: *Acceptable Paper and Other Print Media*.
	The recommended environment for your machine is between 20 °C to 33 °C.
White lines appear in text or graphics. 	Clean the print head. See *Related Information*: *Clean the Print Head from Your Brother Machine*. See *Related Information*: *Clean the Print Head from Your Computer (Windows)* or *Clean the Print Head from Your Computer (Mac)*.
	Make sure you are using Brother Original ink.
	Try using the recommended types of paper. See *Related Information*: *Acceptable Paper and Other Print Media*.
	To prolong print head life, provide the best ink cartridge economy and maintain print quality, we do not recommend frequently unplugging the machine and/or leaving the machine unplugged for extended periods of time. We recommend using ⏻ to power down the machine. Using ⏻ allows minimal power to the machine, resulting in periodic, but less frequent, cleaning of the print head.
The machine prints blank pages.	Check the print quality. See *Related Information*: *Check the Print Quality*.
	Make sure you are using Brother Original ink.
	To prolong print head life, provide the best ink cartridge economy and maintain print quality, we do not recommend frequently unplugging the machine and/or leaving the machine unplugged for extended periods of time. We recommend using ⏻ to power down the machine. Using ⏻ allows minimal power to the machine, resulting in periodic, but less frequent, cleaning of the print head.
Characters and lines are blurred. 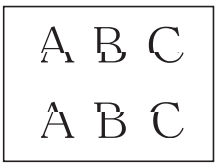 	Check the printing alignment. See *Related Information*: *Check the Print Alignment from Your Brother Machine*. See *Related Information*: *Check the Print Alignment from Your Computer (Windows)* or *Check the Print Alignment from Your Computer (Mac)*.
	Change the print setting options. See *Related Information*: *Change the Print Setting Options When Having Printing Problems*.
Printed text or images are skewed.	Make sure the paper is loaded correctly in the paper tray and the paper guides are adjusted correctly. See *Related Information*: *Load Paper*.
	Make sure the Jam Clear Cover is closed correctly.
Smudge or stain at the top centre of the printed page.	Make sure the paper is not too thick or curled. See *Related Information*: *Acceptable Paper and Other Print Media*.
Printing appears dirty or ink seems to run.	Make sure you are using the recommended types of paper. Do not handle the paper until the ink is dry. See *Related Information*: *Acceptable Paper and Other Print Media*.
	Make sure the printing surface is face down in the paper tray.
	Make sure you are using Brother Original ink.
	If you are using photo paper, make sure the glossy side of the photo paper is face down in the tray and you have set the correct paper type. If you are printing a photo from your computer, set the Media Type in the printer driver.
Ink is smudged or wet when using glossy photo paper.	Be sure to check the front and back of the paper. Place the glossy surface (printing surface) face down.

Difficulties	Suggestions
	See *Related Information*: *Change the Paper Size and Paper Type*.
	If you use glossy photo paper, make sure the paper type setting is correct.
Stains appear on the reverse side or at the bottom of the page.	Make sure the printer platen is not dirty with ink. See *Related Information*: *Clean the Machine's Printer Platen*.
	Make sure you are using Brother Original ink.
	Make sure you are using the paper support flap. See *Related Information*: *Load Paper*.
	Make sure the paper feed rollers are not dirty with ink. See *Related Information*: *Clean the Paper Feed Rollers*.
The machine prints dense lines on the page.	Windows Select **Reverse Order** in the **Basic** tab of the printer driver.
The printouts are wrinkled.	• Windows In the printer driver, choose the **Advanced** tab, click **Other Print Options**, and then click **Advanced Colour Settings**. Clear the **Bi-Directional Printing** check box. • Mac In the printer driver, choose **Print Settings**, click **Advanced**, choose **Other Print Options**, and clear the **Bi-Directional Printing** check box.
	Make sure you are using Brother Original ink.

Paper Handling Difficulties

Difficulties	Suggestions
The machine does not feed paper.	Make sure the paper tray is pushed in all the way until it locks into place.
	Make sure the Jam Clear Cover at the back of the machine is closed.
	If the machine's LCD displays a Paper Jam message and you still have a problem, see *Related Information*: *Error and Maintenance Messages*.
	If the paper tray is empty, load a new stack of paper into the paper tray.
	If there is paper in the paper tray, make sure it is straight. If the paper is curled, straighten it. Sometimes it is helpful to remove the paper, turn the stack over and put it back in the paper tray.
	Reduce the amount of paper in the paper tray, and then try again.
	Clean the paper pick-up rollers. See *Related Information*: *Clean the Paper Pick-up Rollers*.
	Make sure that the paper is within specifications for the machine. See *Related Information*: *Paper Weight and Thickness*.
Photo paper does not feed correctly.	When you print on Brother Photo paper, load one extra sheet of the same photo paper in the paper tray. An extra sheet has been included in the paper package for this purpose.
Machine feeds multiple pages.	• Make sure the paper is loaded correctly in the paper tray. • Remove all the paper from the tray and fan the stack of paper well, then put it back in the tray. • Make sure you do not push the paper in too far. See *Related Information*: *Load Paper*.
	Make sure the Jam Clear Cover is closed correctly. See *Related Information*: *Printer Jam or Paper Jam*.
	Make sure the Base Pad in the paper tray is not dirty. See *Related Information*: *Clean the Base Pad*.

Difficulties	Suggestions
There is a paper jam.	See *Related Information*: *Printer Jam or Paper Jam*. Make sure the paper guides are set to the correct paper size.
	Use the jam prevention settings. For copying See *Related Information*: *Change the Print Setting Options When Having Printing Problems*. For printing See *Related Information*: *Prevent Smudged Printouts and Paper Jams (Windows)* or *Prevent Smudged Printouts and Paper Jams (Mac)*.
Paper jam reoccurs.	If there is a repeat paper jam, a small piece of paper may be stuck in the machine. Make sure paper is not still jammed in the machine. See *Related Information*: *Remove Paper Scraps*.
The paper jams when you use 2-sided copy or 2-sided print.	If paper jams occur frequently during 2-sided copying or 2-sided printing, the paper feed rollers may be stained with ink. Clean the paper feed rollers. See *Related Information*: *Clean the Paper Feed Rollers*.

Printing Received Faxes

Difficulties	Suggestions
• Condensed print • Horizontal streaks • Top and bottom sentences are cut off • Missing lines	This is usually caused by a poor telephone connection. Make a copy; if your copy looks good, you probably had a bad connection, with static or interference on the telephone line. Ask the other party to send the fax again.
Black lines when receiving	The sender's scanner may be dirty. Ask the sender to make a copy to see if the problem is with the sending machine. Try receiving from another fax machine.
Left and right margins are cut off or a single page is printed on two pages.	If the received faxes are divided and printed on two pages or if you get an extra blank page, your paper size setting may not be correct for the paper you are using. See *Related Information*: *Change the Paper Size and Paper Type*.
	Turn on Auto Reduction. See *Related Information*: *Shrink Page Size of an Oversized Incoming Fax*.
Received colour fax prints only in monocrome.	Replace the colour ink cartridges that have reached the end of their life, and then ask the other person to send the colour fax again. See *Related Information*: *Replace the Ink Cartridges*.

Related Information

- If You Are Having Difficulty with Your Machine
- Troubleshooting
- Error and Maintenance Messages
- Replace the Ink Cartridges
- Unprintable Area
- Check the Print Quality
- Change the Paper Size and Paper Type
- Acceptable Paper and Other Print Media
- Clean the Print Head from Your Brother Machine
- Clean the Print Head from Your Computer (Windows)
- Clean the Print Head from Your Computer (Mac)
- Check the Print Alignment from Your Brother Machine

- Check the Print Alignment from Your Computer (Windows)
- Check the Print Alignment from Your Computer (Mac)
- Load Paper
- Clean the Machine's Printer Platen
- Clean the Paper Feed Rollers
- Clean the Paper Pick-up Rollers
- Printer Jam or Paper Jam
- Shrink Page Size of an Oversized Incoming Fax
- Paper Weight and Thickness
- Print Settings (Windows)
- Print Options (Mac)
- Print a Photo (Mac)
- Prevent Smudged Printouts and Paper Jams (Windows)
- Prevent Smudged Printouts and Paper Jams (Mac)
- Clean the Base Pad
- Change the Print Setting Options When Having Printing Problems
- Reduce Printing Noise
- Remove Paper Scraps

Telephone and Fax problems

Telephone Line or Connections

Difficulties	Suggestions
Dialling does not work. (No dial tone)	Check all line cord connections. Make sure the telephone line cord is plugged into the telephone wall socket and the LINE socket of the machine. Make sure your machine has a dial tone by pressing the Hook button in Fax mode. If you subscribe to DSL or VoIP services, contact your service provider for connection instructions. If you are using a VoIP system, try changing the VoIP setting to *Basic (for VoIP)*. This will lower modem speed and turn off Error Correction Mode (ECM). See *Related Information*: *Telephone Line Interference/VoIP*.
	(Available only for some countries.) Change the Tone/Pulse setting. See *Related Information*: *Set Tone or Pulse Dialling Mode*.
	Send a manual fax by pressing the Hook button, and dialing the number. Wait to hear fax-receiving tones before pressing the Start button.
	If there is no dial tone, connect a known working telephone and telephone line cord to the socket. Then lift the external telephone's handset and listen for a dial tone. If there is still no dial tone, ask your telephone company to check the line and/or wall socket.
The machine does not answer when called.	Make sure the machine is in the correct receive mode for your setup. See *Related Information*: *Choose the Correct Receive Mode*. Check for a dial tone. If possible, call your machine to hear it answer. If there is still no answer, check that the telephone line cord is plugged into the telephone wall socket and the LINE socket of the machine. Make sure your machine has a dial tone by pressing the Hook button in Fax mode. If there is no ringing when you call your machine, ask your telephone company to check the line.

Handling Incoming Calls

Difficulties	Suggestions
The machine 'Hears' a voice as a CNG Tone.	If Fax Detect is set to On, your machine is more sensitive to sounds. It may mistakenly interpret certain voices or music on the line as a fax machine calling and respond with fax receiving tones. Deactivate the machine by pressing ❌. Try avoiding this problem by turning Fax Detect to Off. See *Related Information*: *Set Fax Detect*.
Sending a Fax Call to the machine.	If you answered on an extension or external telephone, press your Remote Activation Code (the factory setting is *51). If you answered on the external telephone, press the Start button to receive the fax. When your machine answers, hang up.
Custom features on a single line.	If you have Call Waiting, Call Waiting/Caller ID, Caller ID, Voice Mail, an answering machine, an alarm system or other custom feature on a single telephone line with your machine, it may create a problem sending or receiving faxes. **For Example:** If you subscribe to Call Waiting or some other custom service and its signal comes through the line while your machine is sending or receiving a fax, the signal can temporarily interrupt or disrupt the faxes. Brother's ECM (Error Correction Mode) feature should help overcome this problem. This condition is related to the telephone system industry and is common to all devices that send and receive information on a single, shared line with custom features. If avoiding

Difficulties	Suggestions
	a slight interruption is crucial to your business, we recommend using a separate telephone line with no custom features.

Receiving Faxes

Difficulties	Suggestions
Cannot receive a fax.	Make sure your machine has a dial tone by pressing the Hook button in Fax mode. If you hear static or interference on your fax line, contact your local telephone provider.
	Check all line cord connections. Make sure the telephone line cord is plugged into the telephone wall socket and the LINE socket of the machine. If you subscribe to DSL or VoIP services, contact your service provider for connection instructions. If you are using a VoIP system, try changing the VoIP setting to *Basic (for VoIP)*. This will lower modem speed and turn off Error Correction Mode (ECM). See *Related Information*: *Telephone Line Interference/VoIP*.
	Make sure the machine is in the correct Receive Mode. This is determined by the external devices and telephone subscriber services you have on the same line as the Brother machine. See *Related Information*: *Choose the Correct Receive Mode*. • If you have a dedicated fax line and want your Brother machine to automatically answer all incoming faxes, you should select Fax Auto mode. • If your Brother machine shares a line with an external answering machine, you should select the External TAD mode. In External TAD mode, your Brother machine will automatically receive incoming faxes and voice callers will be able to leave a message on your answering machine. • If your Brother machine shares a line with other telephones and you want it to automatically answer all incoming faxes, you should select the Fax/Tel mode. In Fax/Tel mode, your Brother machine will automatically receive faxes and produce a pseudo/double-ring to alert you to answer voice calls. • If you do not want your Brother machine to automatically answer any incoming faxes, you should select the Manual mode. In Manual mode, you must answer every incoming call and activate the machine to receive faxes.
	Another device or service at your location may be answering the call before your Brother machine answers. To test this, lower the Ring Delay setting: • If the Receive Mode is set to Fax Auto or Fax/Tel, reduce the Ring Delay to 1 ring. See *Related Information*: *Set the Number of Rings Before the Machine Answers (Ring Delay)*. • If the Receive Mode is set to External TAD, reduce the number of rings programmed on your answering machine to 2. • If the Receive Mode is set to Manual, DO NOT adjust the Ring Delay setting.
	Have someone send you a test fax: • If you received the test fax successfully, your machine is operating correctly. Remember to reset your Ring Delay or answering machine setting back to your original setting. If receiving problems recur after resetting the Ring Delay, then a person, device, or subscriber service is answering the fax call before the machine has a chance to answer. • If you were not able to receive the fax, then another device or subscriber service may be interfering with your fax reception or there may be a problem with your fax line.
	If you are using a telephone answering machine (External TAD mode) on the same line as the Brother machine, make sure your answering machine is set up correctly. See *Related Information*: *Connect an External TAD*. 1. Connect the external TAD as shown in the illustration.

Difficulties	Suggestions
	See *Related Information*: *External TAD (Telephone Answering Device)*. 2. Set your answering machine to answer in one or two rings. 3. Record the outgoing message on your answering machine. • Record five seconds of silence at the beginning of your outgoing message. • Limit your speaking to 20 seconds. • End your outgoing message with your Remote Activation Code for people sending manual faxes. For example: “After the beep, leave a message or press *51 and Start to send a fax.” 4. Set your answering machine to answer calls. 5. Set your Brother machine’s Receive Mode to External TAD. See *Related Information*: *Choose the Correct Receive Mode*.
	Make sure your Brother machine’s Fax Detect feature is turned On. Fax Detect is a feature that allows you to receive a fax even if you answered the call on an external or extension telephone. See *Related Information*: *Set Fax Detect*.
	If you often get transmission errors due to possible interference on the telephone line or if you are using a VoIP system, try changing the Compatibility setting to *Basic(for VoIP)*. See *Related Information*: *Telephone Line Interference/VoIP*.

Sending Faxes

Difficulties	Suggestions
Cannot send a fax.	Check all line cord connections. Make sure the telephone line cord is plugged into the telephone wall socket and the LINE socket of the machine. Make sure your machine has a dial tone by pressing the Hook button in Fax mode. If you subscribe to DSL or VoIP services, contact your service provider for connection instructions. If you are using a VoIP system, try changing the VoIP setting to *Basic (for VoIP)*. This will lower modem speed and turn off Error Correction Mode (ECM). See *Related Information*: *Telephone Line Interference/VoIP*.
	Print the Transmission Verification Report and check for an error. See *Related Information*: *Print Reports*.
	Contact your administrator to check your Secure Function Lock Settings.
	Ask the other party to check that the receiving machine has paper.
Poor sending quality.	Try changing your resolution to Fine or S.Fine. Make a copy to check your machine’s scanner operation. If the copy quality is poor, clean the scanner. See *Related Information*: *Clean the Scanner*.
Transmission Verification Report says RESULT:NG.	There is probably temporary noise or static on the line. Try sending the fax again. If you are sending a PC-Fax message and get RESULT:NG on the Transmission Verification Report, your machine may be out of memory. To free up extra memory, you can turn off Fax Storage, print fax messages in memory or cancel a delayed fax. If the problem continues, ask the telephone company to check your telephone line. See *Related Information*: *Turn Off Memory Receive*. See *Related Information*: *Print a Fax Stored in the Machine's Memory*. See *Related Information*: *Cancel a Fax in Progress*. See *Related Information*: *Check and Cancel a Pending Fax*.
	If you often get transmission errors due to possible interference on the telephone line or if you are using a VoIP system, try changing the Compatibility setting to Basic(for VoIP). See *Related Information*: *Telephone Line Interference/VoIP*.
Sent faxes are blank.	Make sure you are loading the document correctly.

Difficulties	Suggestions
	See *Related Information*: *Load Documents in the Automatic Document Feeder (ADF)*. See *Related Information*: *Load Documents on the Scanner Glass*.
Size of the sent fax is different from the document size.	The machine may not detect the document size correctly for some documents, such as dark-colour documents and transparencies. Select the correct document size option according to the size of your document.
Vertical black lines when sending.	Black vertical lines on faxes you send are typically caused by dirt or correction fluid on the glass strip. Clean the glass strip. See *Related Information*: *Clean the Scanner*.

Related Information

- If You Are Having Difficulty with Your Machine
- Set Dial Tone Detection
- Telephone Line Interference/VoIP
- Troubleshooting
- Set Tone or Pulse Dialling Mode
- Choose the Correct Receive Mode
- Set Fax Detect
- Set the Number of Rings Before the Machine Answers (Ring Delay)
- Connect an External TAD
- External TAD (Telephone Answering Device)
- Print Reports
- Clean the Scanner
- Turn Off Memory Receive
- Print a Fax Stored in the Machine's Memory
- Cancel a Fax in Progress
- Check and Cancel a Pending Fax
- Load Documents in the Automatic Document Feeder (ADF)
- Load Documents on the Scanner Glass

Set Dial Tone Detection

Setting the Dial Tone to [Detection] will shorten the Dial Tone detect pause.

>> MFC-J3530DW
>> MFC-J3930DW

MFC-J3530DW

1. Press [Settings] > [All Settings] > [Initial Setup] > [Dial Tone].
2. Press [Detection] or [No Detection].
3. Press .

MFC-J3930DW

1. Press [Settings] > [All Settings] > [Initial Setup] > [Dial Tone].
2. Press [Detection] or [No Detection].
3. Press .

Related Information

- Telephone and Fax problems

Telephone Line Interference/VoIP

If you are having problems sending or receiving a fax due to possible interference on the telephone line or if you are using a VoIP system, we recommend changing the modem speed to minimise errors in fax operations.

>> MFC-J3530DW
>> MFC-J3930DW

MFC-J3530DW

1. Press [Settings] > [All Settings] > [Initial Setup] > [Compatibility].
2. Press the option you want.
   - [Basic(for VoIP)] reduces the modem speed to 9,600 bps and turns off colour fax receiving and ECM, except for colour fax-sending. Unless interference is a recurring problem on your telephone line, you may prefer to use it only when needed.

     To improve compatibility with most VoIP services, Brother recommends changing the compatibility setting to [Basic(for VoIP)].
   - [Normal] sets the modem speed at 14,400 bps.
   - [High] sets the modem speed at 33,600 bps.
3. Press .

- VoIP (Voice over IP) is a type of phone system that uses an Internet connection, rather than a traditional phone line.
- Brother does not recommend the use of a VoIP line. VoIP limitations in general can cause some functions of the fax machine not to work correctly.

MFC-J3930DW

1. Press [Settings] > [All Settings] > [Initial Setup] > [Compatibility].
2. Press the option you want.
   - [Basic(for VoIP)] reduces the modem speed to 9,600 bps and turns off colour fax receiving and ECM, except for colour fax-sending. Unless interference is a recurring problem on your telephone line, you may prefer to use it only when needed.

     To improve compatibility with most VoIP services, Brother recommends changing the compatibility setting to [Basic(for VoIP)].
   - [Normal] sets the modem speed at 14,400 bps.
   - [High] sets the modem speed at 33,600 bps.
3. Press .

- VoIP (Voice over IP) is a type of phone system that uses an Internet connection, rather than a traditional phone line.
- Brother does not recommend the use of a VoIP line. VoIP limitations in general can cause some functions of the fax machine not to work correctly.

Related Information

- Telephone and Fax problems
- Voice Over Internet Protocol (VoIP/Telephone Line Interference)
- Error and Maintenance Messages

Other Problems

Copying Difficulties

Difficulties	Suggestions
Cannot make a copy.	Contact your administrator to check your Secure Function Lock Settings.
Black lines or streaks appear in copies. 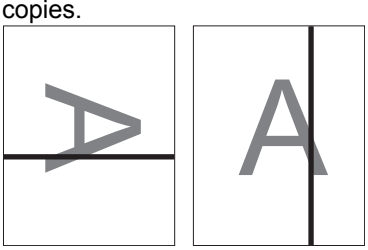	Black lines on copies are typically caused by dirt or correction fluid on the glass strip. Clean the glass strip, scanner glass, and the white bar and white plastic above them. See *Related Information*: *Clean the Scanner*.
Black marks or spots appear in copies.	Black marks or spots on copies are typically caused by dirt or correction fluid on the scanner glass. Clean the scanner glass and white plastic above it. See *Related Information*: *Clean the Scanner*.
Dark lines appear at regular intervals.	Check and adjust the paper feed. See *Related Information*: *Correct the Paper Feed to Clear Vertical Lines*.
Copies are blank.	Make sure you are loading the document correctly. See *Related Information*: *Load Documents in the Automatic Document Feeder (ADF)*. See *Related Information*: *Load Documents on the Scanner Glass*.
Poor copy results when using the ADF.	Try using the scanner glass. See *Related Information*: *Load Documents on the Scanner Glass*.
Fit to Page does not work correctly.	Make sure the document is not skewed on the scanner glass. Reposition the document and try again.
	The machine may not detect the document size correctly for some documents, such as dark-colour documents and transparencies. Therefore, Fit to Page may not work. Select an enlargement or reduction ratio other than Fit to Page according to the sizes of your document and paper.

Scanning Difficulties

Difficulties	Suggestions
TWAIN or WIA errors appear when starting to scan. (Windows)	Make sure the Brother TWAIN or WIA driver is selected as the primary source in your scanning application. For example, in Nuance™ PaperPort™ 14, click **Desktop** > **Scan Settings** > **Select** to choose the Brother TWAIN/WIA driver.
TWAIN error appears when starting to scan. (Mac)	Make sure the Brother TWAIN driver is selected as the primary source in your scanning application. You can also scan documents using the ICA Scanner Driver.
OCR does not work.	Try increasing the scanning resolution.
Poor scanning results when using the ADF. (Black lines appear in the scanned data.)	Clean the white bar and the glass strip underneath it. See *Related Information*: *Clean the Scanner*.

Difficulties	Suggestions
	Try using the scanner glass. See *Related Information*: *Load Documents on the Scanner Glass*.

Direct Photo Printing Difficulties

Difficulties	Suggestions
Part of my photo is missing when printed.	Make sure Borderless printing and Cropping are turned off. See *Related Information*: *Print Borderless Photos from a USB Flash Drive*. See *Related Information*: *Print Photos with Auto Cropping*.

Software Difficulties

Difficulties	Suggestions
Cannot print.	Uninstall and reinstall the Brother driver.
“Device Busy” appears on the computer screen.	Make sure the machine is not showing an error message on the machine's display.

Related Information

- If You Are Having Difficulty with Your Machine
- Troubleshooting
- Clean the Scanner
- Correct the Paper Feed to Clear Vertical Lines
- Load Documents in the Automatic Document Feeder (ADF)
- Load Documents on the Scanner Glass
- Print Borderless Photos from a USB Flash Drive
- Print Photos with Auto Cropping

Network Problems

- Use the Network Connection Repair Tool (Windows)
- Where Can I Find My Brother Machine's Network Settings?
- I Cannot Complete the Wireless Network Setup Configuration
- My Brother Machine Cannot Print, Scan, or PC-FAX Receive over the Network
- I Want to Check that My Network Devices are Working Correctly
- Troubleshooting

Use the Network Connection Repair Tool (Windows)

Use the Network Connection Repair Tool to fix the Brother machine's network settings. It will assign the correct IP address and Subnet Mask.

- Windows Vista/Windows 7/Windows 8/Windows 10
  You must log on with Administrator rights.
- Make sure the Brother machine is turned on and is connected to the same network as your computer.

1. Do one of the following:

Option	Description
Windows Vista/ Windows 7	Click **(Start)** > **All Programs** > **Brother** > **Brother Utilities**. Click the drop-down list and select your model name (if not already selected). Click **Tools** in the left navigation bar, and then click **Network Connection Repair Tool**.
Windows 8/ Windows 10	Launch (**Brother Utilities**), and then click the drop-down list and select your model name (if not already selected). Click **Tools** in the left navigation bar, and then click **Network Connection Repair Tool**.

- If the **User Account Control** screen appears, do one of the following:
  - Windows Vista: Click **Allow**.
  - Windows 7/Windows 8/Windows 10: Click **Yes**.

2. Follow the on-screen instructions.
3. Check the diagnosis by printing the Network Configuration Report.

The Network Connection Repair Tool will start automatically if you select the **Enable Connection Repair Tool** option in the Status Monitor. Right-click the Status Monitor screen, and then click **Other Settings** > **Enable Connection Repair Tool**. This is not recommended when your network administrator has set the IP address to Static, since it will automatically change the IP address.

If the correct IP address and the Subnet Mask are still not assigned even after using the Network Connection Repair Tool, ask your network administrator for this information.

Related Information

- Network Problems
- Print the Network Configuration Report
- My Brother Machine Cannot Print, Scan, or PC-FAX Receive over the Network
- I Want to Check that My Network Devices are Working Correctly

Where Can I Find My Brother Machine's Network Settings?

- Change Machine Settings from Your Computer
- Print the Network Configuration Report

I Cannot Complete the Wireless Network Setup Configuration

Turn your wireless router off and back on. Then try to configure the wireless settings again. If you are unable to resolve the problem, follow the instructions below:

Investigate the problem using the WLAN Report.

Cause	Action	Interface
Your security settings (SSID/ Network Key) are not correct.	• Confirm the security settings using the Wireless Setup Helper utility. For more information and to download the utility, go to your model's **Downloads** page on the Brother Solutions Center at support.brother.com. • Select and confirm that you are using the correct security settings. - See the instructions supplied with your wireless LAN access point/router for information on how to find the security settings. - The manufacturer's name or model number of the wireless LAN access point/router may be used as the default security settings. - Consult with the access point/router manufacturer, your Internet provider, or network administrator.	Wireless
Your Brother machine's MAC address is not allowed.	Confirm that the Brother machine's MAC Address is allowed in the filter. You can find the MAC Address on your Brother machine's control panel.	Wireless
Your wireless LAN access point/router is in stealth mode (not broadcasting the SSID).	• Enter the correct SSID name or Network Key manually. • Check the SSID name or the Network Key in the instructions supplied with your wireless LAN access point/router and reconfigure the wireless network setup.	Wireless
Your security settings (SSID/ password) are not correct.	• Confirm the SSID and password. - When you are configuring the network manually, the SSID and password are displayed on your Brother machine. If your mobile device supports the manual configuration, the SSID and password will be displayed on your mobile device's screen.	Wi-Fi Direct
You are using Android™ 4.0.	If your mobile device disconnects (approximately six minutes after using Wi-Fi Direct), try the one-push configuration using WPS (recommended) and set the Brother machine as a G/O.	Wi-Fi Direct
Your Brother machine is placed too far from your mobile device.	Move your Brother machine within about 3.3 feet (1 metre) of the mobile device when you configure the Wi-Fi Direct network settings.	Wi-Fi Direct
There are some obstructions (walls or furniture, for example) between your machine and the mobile device.	Move your Brother machine to an obstruction-free area.	Wi-Fi Direct
There is a wireless computer, Bluetooth-supported device, microwave oven, or digital cordless phone near the Brother machine or the mobile device.	Move other devices away from the Brother machine or the mobile device.	Wi-Fi Direct
If you have checked and tried all of the above, but still cannot complete the Wi-Fi	• Turn your Brother machine off and back on. Then try to configure the Wi-Fi Direct settings again.	Wi-Fi Direct

Cause	Action	Interface
Direct configuration, do the following:	• If you are using your Brother machine as a client, confirm how many devices are allowed in the current Wi-Fi Direct network, and then check how many devices are connected.	

For Windows

If your wireless connection has been interrupted, and you have checked and tried all of the above, we recommend using the Network Connection Repair Tool.

Related Information

- Network Problems
- Configure Your Machine for a Wireless Network When the SSID is Not Broadcast
- Use Wi-Fi Direct®

My Brother Machine Cannot Print, Scan, or PC-FAX Receive over the Network

Cause	Action	Interface
Your security software blocks your machine's access to the network. (The Network scanning feature does not work.)	• Windows Configure the third-party Security/Firewall Software to allow Network scanning. To add port 54925 for Network scanning, type the information below: - In **Name**: Type any description, for example Brother NetScan. - In **Port number**: Type 54925. - In **Protocol**: UDP is selected. See the instruction manual that came with your third-party Security/Firewall Software or contact the software manufacturer. • Mac Launch ControlCenter2. Click the **Model** pop-up menu, and then select **Other...**. The **Device Selector** window appears. Reselect your network machine, make sure **Status** is **idle**, and then click **OK**.	Wired/Wireless
Your security software blocks your machine's access to the network. (The network PC-Fax Receive feature does not work.) (Windows)	Set the third-party Security/Firewall Software to allow PC-FAX Rx. To add port 54926 for Network PC-FAX Rx, type the information below: • In **Name**: Type any description, for example Brother PC-FAX Rx. • In **Port number**: Type 54926. • In **Protocol**: UDP is selected. See the instruction manual that came with your third-party Security/Firewall Software or contact the software manufacturer.	Wired/Wireless
Your security software blocks your machine's access to the network.	Some security software might block access without showing a security alert dialog box even after successful installation. To allow access, see the instructions for your security software or ask the software manufacturer.	Wired/Wireless
Your Brother machine was not assigned an available IP address.	• Confirm the IP address and the Subnet Mask. Verify that both the IP addresses and Subnet Masks of your computer and the Brother machine are correct and located on the same network. For more information about how to verify the IP address and the Subnet Mask, ask your network administrator. • Windows Confirm the IP address and the Subnet Mask using the Network Connection Repair Tool. • Mac Check your network devices using the ping command. For more information on how to confirm your network settings, see *Related Information*:*Check Network Devices Using the Ping Command*.	Wired/Wireless
The failed print job is still in your computer's print queue.	• If the failed print job is still in your computer's print queue, delete it. • Otherwise, double-click the printer icon in the following folder and cancel all documents:	Wired/Wireless

Cause	Action	Interface
	- Windows Vista Click (Start) > **Control Panel** > **Hardware and Sound** > **Printers**. - Windows 7 Click (Start) > **Devices and Printers** > **Printers and Faxes**. - Windows 8 Move your mouse to the lower right corner of your desktop. When the menu bar appears, click **Settings** > **Control Panel**. In the **Hardware and Sound** group, click **View devices and printers** > **Printers**. - Windows 10 Click > **All apps** > **Windows System** > **Control Panel**. In the **Hardware and Sound** group, click **View devices and printers** > **Printers**. - Windows Server 2008 Click **Start** > **Control Panel** > **Printers**. - Windows Server 2012 Move your mouse to the lower right corner of your desktop. When the menu bar appears, click **Settings** > **Control Panel**. In the **Hardware** group, click **View devices and printers** > **Printers**. - Windows Server 2012 R2 Click **Control Panel** on the **Start** screen. In the **Hardware** group, click **View devices and printers**. - OS X v10.9.5, 10.10.x, 10.11.x Click **System Preferences** > **Printers & Scanners**.	
Your Brother machine is not connected to the wireless network.	Print the WLAN Report to check the error code on the printed report.	Wireless

If you have checked and tried all of the above, but your Brother machine still cannot print and scan, uninstall the Brother software and drivers and reinstall them.

Related Information

- Network Problems
- Print the WLAN Report
- Use the Network Connection Repair Tool (Windows)
- Wireless LAN Report Error Codes
- Check Network Devices Using the Ping Command
- I Want to Check that My Network Devices are Working Correctly

I Want to Check that My Network Devices are Working Correctly

Check	Action	Interface
Check that your Brother machine, access point/router, or network hub is turned on.	**Check the following:** • The power cord is connected correctly and the Brother machine is turned on. • The access point/router or hub is turned on and its link button is blinking. • All protective packaging has been removed from the machine. • The ink cartridges are installed correctly. • The Scanner Cover and the Jam Clear Cover are fully closed. • Paper is inserted correctly in the paper tray. • (For wired networks) A network cable is securely connected to the Brother machine and to the router or hub.	Wired/Wireless
Check that you can "ping" the Brother machine from your computer.	Ping the Brother machine from your computer using the IP address or the node name in the Windows command prompt or Mac Terminal application: ping `<ipaddress>` or `<nodename>`. • Successful: Your Brother machine is working correctly and connected to the same network as your computer. • Unsuccessful: Your Brother machine is not connected to the same network as your computer. (Windows) Ask the network administrator and use the Network Connection Repair Tool to fix the IP address and the subnet mask. (Mac) Confirm that the IP address and the Subnet Mask are set correctly.	Wired/Wireless
Check that your Brother machine is connected to the wireless network.	Print the WLAN Report to check the error code on the printed report.	Wireless

If you have checked and tried all of the above but you are still having problems, see the instructions supplied with your wireless LAN access point/router to find the SSID and the Network Key information and set them correctly.

Related Information

- Network Problems
- Check Network Devices Using the Ping Command
- Print the Network Configuration Report
- Print the WLAN Report
- Use the Network Connection Repair Tool (Windows)
- My Brother Machine Cannot Print, Scan, or PC-FAX Receive over the Network
- Wireless LAN Report Error Codes

Check Network Devices Using the Ping Command

Check the IP addresses of both your computer and your Brother machine, and then confirm whether the network is operating correctly.

>> Configure the IP Address on your computer (Windows)
>> Configure the IP Address on your computer (Mac)
>> Configure the IP Address on your Brother machine

Configure the IP Address on your computer (Windows)

1. Do one of the following:
   - Windows Vista and Windows7

     Click /**Start** > **All Programs** > **Accessories** > **Command Prompt**
   - Windows 8

     Move your mouse to the lower right corner of your desktop. When the menu bar appears, click **Search** > **Command Prompt**.
   - Windows 10

     Click > **All apps** > **Windows System** > **Command Prompt**.
2. Type "ipconfig" and then press the Enter key on your keyboard.
3. Confirm the values for the IPv4 address and subnet mask.
4. Type "exit" and then press the Enter key on your keyboard.

Configure the IP Address on your computer (Mac)

1. Select **System Preferences** from the Apple menu.
2. Click **Network** > **Advanced** > **TCP/IP**
3. Confirm the values for the IPv4 address and subnet mask.

Configure the IP Address on your Brother machine

Print the Network Configuration Report, and confirm the values for the IP address and subnet mask.

```
<IP Settings >
 IP Address                192.168.11.250     (set manually)
 Subnet Mask               255.255.255.0
 IP Gateway                192.168.100.200
 Boot Method               STATIC
 Boot Tries                3
 IP Filter                 Disabled
```

Check the IP addresses for both your computer and your Brother machine. Confirm that the network address portions are the same. For example, if the subnet mask is "255.255.255.0", it is normal for only the host address portions to be different.

	Network Address	Host Address	
IP Address	192.168.100.	250	Set the final number, which corresponds to "0" in the subnet mask, to 1–254.
Subnet Mask	255.255.255.	0	Usually, there are no problems when the subnet mask is "255.255.255.0". Use the same value for all of your computers.

Related Information

- I Want to Check that My Network Devices are Working Correctly

- My Brother Machine Cannot Print, Scan, or PC-FAX Receive over the Network

AirPrint Problems

Difficulty	Suggestions
My Brother machine is not displayed in the printer list.	Make sure your Brother machine is turned on.
	Confirm the network settings. See *Related Information*.
	Move the mobile device closer to the wireless access point/router, or to your Brother machine.
I cannot print.	Make sure your Brother machine is turned on.
	Confirm the network settings. See *Related Information*.
I am trying to print a multiple-page document from an Apple device, but ONLY the first page is printing.	Make sure you are running the latest version of iOS. Refer to the following Apple support article for more information about AirPrint: support.apple.com/kb/HT4356.

Related Information

- If You Are Having Difficulty with Your Machine
- Troubleshooting

Check the Machine Information

Follow these instructions to check your Brother machine's serial number, firmware version, and firmware update.

>> MFC-J3530DW
>> MFC-J3930DW

MFC-J3530DW

1. Press [Settings] > [All Settings] > [Machine Info.].
2. Press one of the following options:
   - [Serial No.]
     Check your machine's serial number.
   - [Firmware Version]
     Check your machine's firmware version.
   - [Firmware Update]
     Update your machine to the latest firmware.
   - [Firmware Auto Check]
     View firmware information on the Home screen.
3. Press .

MFC-J3930DW

1. Press [Settings] > [All Settings] > [Machine Info.] .
2. Press one of the following options:
   - [Serial No.]
     Check your machine's serial number.
   - [Firmware Version]
     Check your machine's firmware version.
   - [Firmware Update]
     Update your machine to the latest firmware.
   - [Firmware Auto Check]
     View firmware information on the Home screen.
3. Press .

Related Information

- Troubleshooting

Reset Your Brother Machine

>> MFC-J3530DW
>> MFC-J3930DW

MFC-J3530DW

1. Press [Settings] > [All Settings] > [Initial Setup] > [Reset].
2. Press the reset option you want to use.
3. Press [OK] for two seconds to reboot the machine.

MFC-J3930DW

1. Press [Settings] > [All Settings] > [Initial Setup] > [Reset].
2. Press the reset option you want to use.
3. Press [OK] for two seconds to reboot the machine.

Related Information

- Troubleshooting
- Reset Functions Overview
- Transfer Your Faxes or Fax Journal Report

Reset Functions Overview

The following reset functions are available:

1. [Machine Reset]

   You can reset all the machine's settings that you have changed, such as Date and Time and Ring Delay. The Address Book, Fax Reports, and Call History will remain.

2. [Network]

   Reset the print server back to its default factory settings (includes Password and IP Address information).

3. [Address Book & Fax]

   Address Book & Fax resets the following settings:

   - Address Book
     (Address Book and Setup Groups)
   - Programmed fax jobs in the memory
     (Delayed Fax and Delayed Batch Transmission)
   - Station ID
     (Name and Number)
   - Remote Fax Options
     (Fax Forwarding)
   - Report
     (Transmission Verification Report, Address Book and Fax Journal)
   - History
     (Caller ID history and Outgoing Call)
   - Faxes in memory

4. [All Settings]

   Use the Settings Reset function to reset all machine's settings to the settings originally set at the factory. Brother strongly recommends you perform this operation when you dispose of the machine.

Unplug the interface cable before you choose [Network] or [All Settings].

Related Information

- Reset Your Brother Machine
- Transfer Your Faxes or Fax Journal Report

Routine Maintenance

- Replace the Ink Cartridges
- Clean Your Brother Machine
- Check Your Brother Machine
- Correct the Paper Feed to Clear Vertical Lines
- Change the Print Setting Options When Having Printing Problems
- Pack and Ship Your Brother Machine

Replace the Ink Cartridges

Your Brother machine is equipped with an ink dot counter. The ink dot counter automatically monitors the level of ink in each of the four cartridges. When the machine detects an ink cartridge is running out of ink, the machine will display a message.

The LCD displays which ink cartridge is low or needs replacing. Be sure to follow the LCD prompts to replace the ink cartridges in the correct order.

Even though the machine tells you to replace an ink cartridge, there will be a small amount of ink left in the ink cartridge. It is necessary to keep some ink in the ink cartridge to prevent air from drying out and damaging the print head assembly.

CAUTION

If ink gets in your eyes, wash it out with water at once and call a doctor if you are concerned.

IMPORTANT

Brother strongly recommends that you do not refill the ink cartridges provided with your machine. We also strongly recommend that you continue to use only Brother Original replacement ink cartridges. Use or attempted use of potentially incompatible ink and/or cartridges in the Brother machine may cause damage to the machine and/or may result in unsatisfactory print quality. Our warranty coverage does not apply to any problem that is caused by the use of unauthorised third-party ink and/or cartridges. To protect your investment and obtain premium performance from the Brother machine, we strongly recommend the use of Brother Original ink cartridges.

1. Open the ink cartridge cover (1).

   If one or more of the ink cartridges needs replacing, the LCD displays `[Black and White Print Only]` or `[Replace Ink]`.

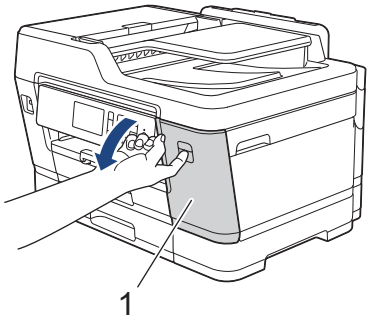

If the black cartridge is empty, the only message that will appear is `[Replace Ink]`. You must replace the black cartridge.

2. Press the lock release lever to release the cartridge colour indicated on the LCD and remove the cartridge from the machine, as shown in the illustration.

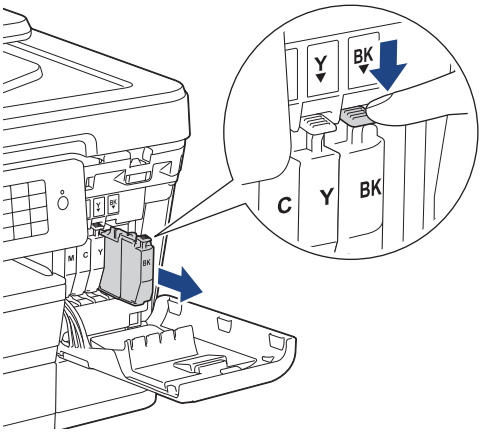

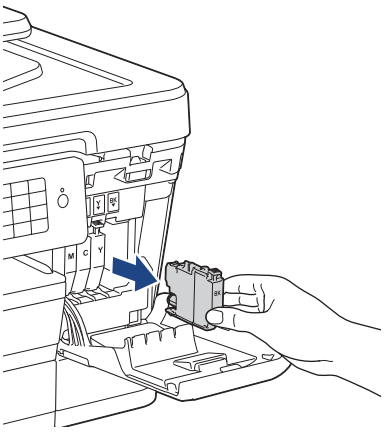

3. Open the new ink cartridge bag for the colour indicated on the LCD, and take out the ink cartridge.

IMPORTANT

- Quickly shake just the **black** ink cartridge horizontally 15 times as shown, before inserting it into the machine.

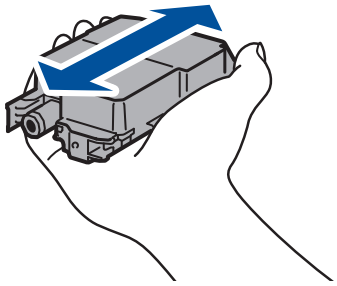

4. Insert the ink cartridge in the direction of the arrow on the label.

   Each colour has its own correct position.

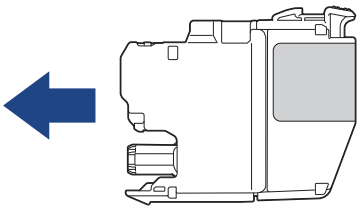

5. Gently push the area marked “PUSH” until the ink cartridge locks into place, and then close the ink cartridge cover.

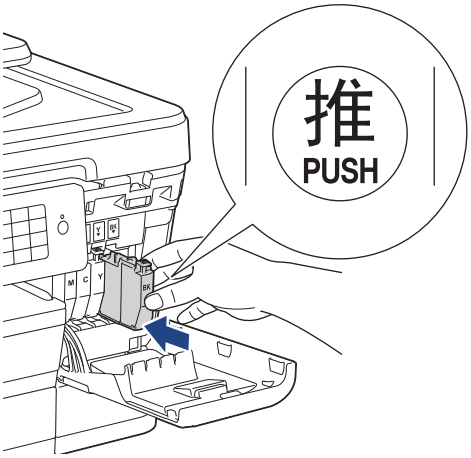

The machine will automatically reset the ink dot counter.

- If you replaced an ink cartridge, for example, the Black cartridge, the LCD may ask you to verify that it is a brand new one (for example, `[Did you change Black]`). For each new cartridge you installed, select `[Yes]` to reset the ink dot counter for that colour. If the ink cartridge you installed is not a brand new one, be sure to select `[No]`.
- If the LCD displays `[No Ink Cartridge]` or `[Cannot Detect]` after you install the ink cartridge, check that the ink cartridge is installed correctly. Remove the ink cartridge and reinstall it slowly until it locks into place.

IMPORTANT

- DO NOT shake the ink cartridges. If ink stains your skin or clothing, wash with soap or detergent at once.
- DO NOT take out ink cartridges if you do not need to replace them; the machine will not know the quantity of ink left in the cartridge.
- DO NOT touch the cartridge insertion slots; the ink may stain your skin.
- If you mix the colors by installing an ink cartridge in the wrong position, clean the print head several times after correcting the cartridge installation.
- When you open an ink cartridge, install it in the machine and use it up within six months of installation. Use unopened ink cartridges by the expiration date written on the cartridge package.
- DO NOT dismantle or tamper with the ink cartridge; this can cause the ink to leak out of the cartridge.

Related Information

- Routine Maintenance
- Error and Maintenance Messages
- Paper Handling and Printing Problems
- Pack and Ship Your Brother Machine

Clean Your Brother Machine

- Clean the Scanner
- Clean the Print Head from Your Brother Machine
- Clean the Print Head from Your Computer (Windows)
- Clean the Print Head from Your Computer (Mac)
- Clean the Machine's LCD
- Clean the Outside of the Machine
- Clean the Machine's Printer Platen
- Clean the Paper Feed Rollers
- Clean the Base Pad
- Clean the Paper Pick-up Rollers
- Clean the Paper Pick-up Rollers for Paper Tray #2

Clean the Scanner

1. Unplug the machine from the electrical socket.
2. Lift the document cover (1). Clean the scanner glass (2) and the white plastic (3) with a soft lint-free cloth moistened with water.

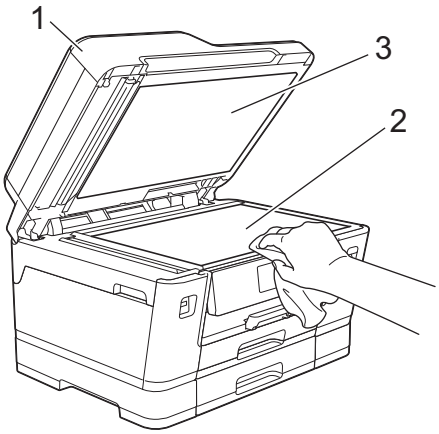

3. In the ADF unit, clean the white bar (1) and the glass strip (2) with a lint-free cloth moistened with water.

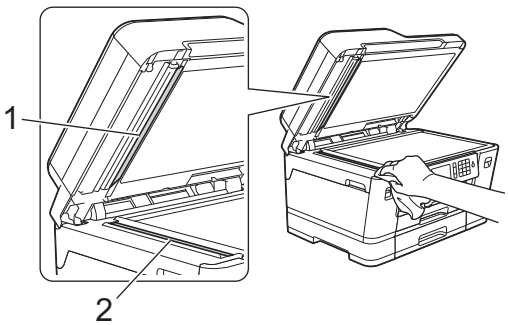

4. (MFC-J3930DW) Open the scanner glass cover (1), and clean the white bar (2) and the glass strip (3) with a soft lint-free cloth moistened with water.

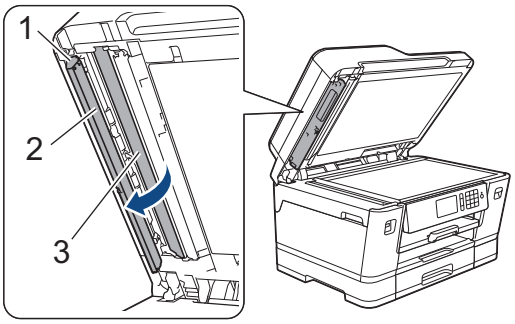

In addition to cleaning the scanner glass and glass strip with a non-flammable glass cleaner, run your fingertip over the glass to see if you can feel anything on it. If you feel dirt or debris, clean the glass again concentrating on that area. You may need to repeat the cleaning process three or four times. To test, make a copy after each cleaning attempt.

When there is a spot of dirt or correction fluid on the glass strip, the printed sample shows a vertical line.

After the glass strip is cleaned, the vertical line is gone.

Related Information

- Clean Your Brother Machine
- Telephone and Fax problems
- Other Problems

Clean the Print Head from Your Brother Machine

To maintain good print quality, the machine automatically cleans the print head when needed. If there is a print quality problem, start the cleaning process manually.

- Clean the print head if there is a horizontal line or a blank space in the text or graphics on printed pages. Depending on the problem colour, select to clean Black only, three colours at a time (Yellow/Cyan/Magenta), or all four colours at once.
- Cleaning the print head consumes ink.
- Cleaning too often uses ink unnecessarily.

IMPORTANT

DO NOT touch the print head. Touching the print head may cause permanent damage and may void the print head's warranty.

>> MFC-J3530DW
>> MFC-J3930DW

MFC-J3530DW

1. Press [Ink] > [Print Head Cleaning].

   You can also press [Settings] > [Maintenance] > [Print Head Cleaning].

2. Press [Black only], [Colour only], or [All].
3. Press [Normal], [Strong], or [Strongest].
4. Press [Start].

   The machine cleans the print head.

- If you clean the print head and the print has not improved, try installing a new Brother Original replacement ink cartridge for each problem colour. Try cleaning the print head again. If the print has not improved, contact Brother customer service or your local Brother dealer.
- You can also clean the print head from your computer.

MFC-J3930DW

1. Press [Ink] > [Print Head Cleaning].

   You can also press [Settings] > [Maintenance] > [Print Head Cleaning].

2. Press [Black only], [Colour only], or [All].
3. Press [Normal], [Strong], or [Strongest].
4. Press [Start].

   The machine cleans the print head.

- If you clean the print head and the print has not improved, try installing a new Brother Original replacement ink cartridge for each problem colour. Try cleaning the print head again. If the print has not improved, contact Brother customer service or your local Brother dealer.
- You can also clean the print head from your computer.

Related Information

- Clean Your Brother Machine
- Paper Handling and Printing Problems
- Clean the Print Head from Your Computer (Windows)
- Clean the Print Head from Your Computer (Mac)

Clean the Print Head from Your Computer (Windows)

To maintain good print quality, the machine automatically cleans the print head when needed. If there is a print quality problem, start the cleaning process manually.

1. Do one of the following:
   - For Windows Vista and Windows Server 2008

     Click **(Start)** > **Control Panel** > **Hardware and Sound** > **Printers**.
   - For Windows 7 and Windows Server 2008 R2

     Click **(Start)** > **Devices and Printers**.
   - For Windows 8

     Move your mouse to the lower right corner of your desktop. When the menu bar appears, click **Settings**, and then click **Control Panel**. In the **Hardware and Sound** group, click **View devices and printers**.
   - For Windows Server 2012

     Move your mouse to the lower right corner of your desktop. When the menu bar appears, click **Settings**, and then click **Control Panel**. In the **Hardware** group, click **View devices and printers**.
   - For Windows Server 2012 R2

     Click **Control Panel** on the **Start** screen. In the **Hardware** group, click **View devices and printers**.
   - For Windows 10

     Click > **All apps** > **Windows System** > **Control Panel**. In the **Hardware and Sound** group, click **View devices and printers**.
2. Right-click the **Brother MFC-XXXX Printer** icon (where XXXX is your model name), and then select **Printing preferences**. If printer driver options appear, select your printer driver.

   The printer driver dialog box appears.
3. Click the **Maintenance** tab.
4. Select one of the following options:

Option	Description
Check Print Quality...	Use to print the test page and check the print quality.
Print Head Cleaning...	Use to start the cleaning process manually. Select if a line or blank spaces appear in text or graphics on the test page.

5. Do one of the following:
   - If you selected the **Check Print Quality...** option, click **Start**.

     The machine prints the test page.
   - If you selected the **Print Head Cleaning...** option, select the **Black only**, **Colour only**, or **All** option for the cleaning type, and then click **Next**.
6. Select the **Normal**, **Strong**, or **Strongest** option for the cleaning strength, and then click **Next**.
7. Click **Start**.

   The machine starts cleaning.

Related Information

- Clean Your Brother Machine
- Paper Handling and Printing Problems
- Clean the Print Head from Your Brother Machine

Clean the Print Head from Your Computer (Mac)

To maintain good print quality, the machine automatically cleans the print head when needed. If there is a print quality problem, start the cleaning process manually.

1. Select **System Preferences** from the Apple menu.
2. Select **Printers & Scanners**, and then select the machine.
3. Click the **Options & Supplies** button.
4. Click the **Utility** tab, and then click the **Open Printer Utility** button.

   The Status Monitor screen appears.
5. Click the **Control** menu, and then select **Maintenance**.
6. Select one of the following options:

Option	Description
Check Print Quality...	Use to print the test page and check the print quality.
Print Head Cleaning...	Use to start the cleaning process manually. Select if a line or blank spaces appear in text or graphics on the test page.

7. Do one of the following:
   - If you selected the **Check Print Quality...** option, click **Start**.

     The machine prints the test page.
   - If you selected the **Print Head Cleaning...** option, select **Black only**, **Color only**, or **All** option for the cleaning type, and then click **Next**.
8. Select the **Normal**, **Strong**, or **Strongest** option for the cleaning strength, and then click **Next**.
9. Click **Start**.

   The machine starts cleaning.

Related Information

- Clean Your Brother Machine
- Paper Handling and Printing Problems
- Clean the Print Head from Your Brother Machine

Clean the Machine's LCD

IMPORTANT

DO NOT use liquid cleaners (including ethanol).

1. Press and hold down ⏻ to turn off the machine. The LCD displays `[Shutting Down]` for a few seconds before the power goes off.
2. Clean the LCD with a dry, soft lint-free cloth.

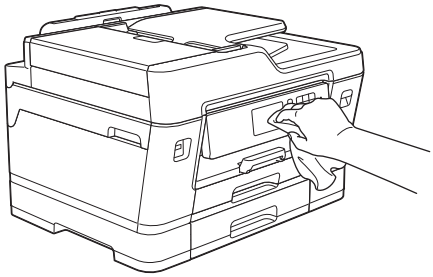

Related Information

- Clean Your Brother Machine

Clean the Outside of the Machine

IMPORTANT

- Use neutral detergents. Cleaning with volatile liquids such as thinner or benzine will damage the outside surface of the machine.
- DO NOT use cleaning materials that contain ammonia.
- DO NOT use isopropyl alcohol to remove dirt from the control panel. It may crack the panel.

1. If the paper support flap is open, close it, and then close the paper support.
2. Pull the paper trays (1) completely out of the machine as shown by the arrow.

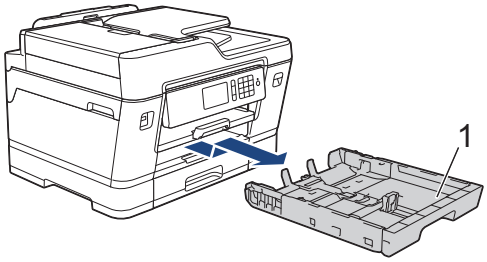

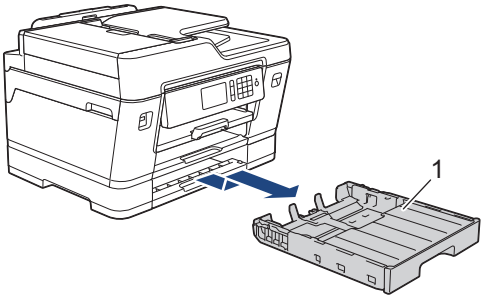

3. Wipe the outside of the machine with a dry, lint-free cloth to remove dust.

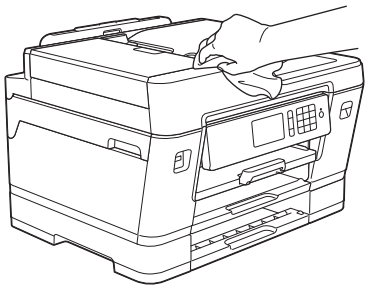

4. Remove anything that is stuck inside the paper tray. Wipe the inside and the outside of the paper tray with a dry, lint-free cloth to remove dust.

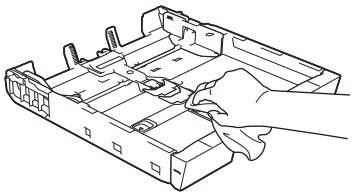

5. Slowly push the paper tray completely into the machine.

Related Information

- Clean Your Brother Machine

Clean the Machine's Printer Platen

WARNING

Be sure to unplug the machine from the electrical socket before cleaning the printer platen to avoid an electrical shock.

1. Using both hands, use the finger holds on each side of the machine to lift the scanner cover into the open position.
2. Clean the machine’s printer platen (1) and the area around it, wiping off scattered ink with a dry, soft lint-free cloth.

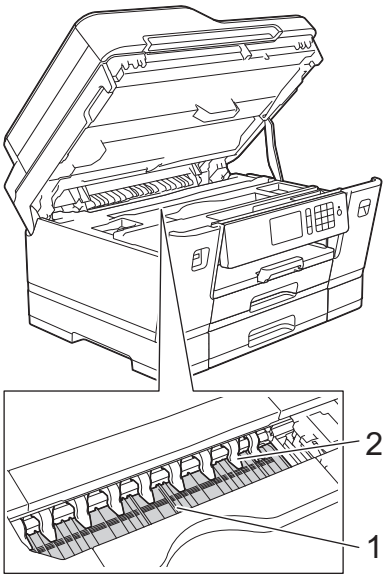

IMPORTANT

DO NOT bend or apply too much pressure on the nine tabs (2). They could be damaged.

3. Gently close the scanner cover using both hands.

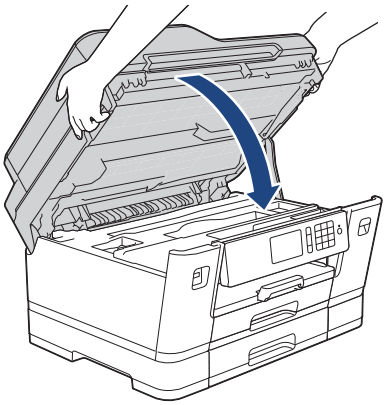

4. Reconnect the power cord.

Related Information

- Clean Your Brother Machine
- Paper Handling and Printing Problems

Clean the Paper Feed Rollers

If the paper feed rollers are stained with ink or have a buildup of paper dust, it may cause paper feed problems.

1. Unplug the machine from the electrical socket.
2. If the paper support flap is open, close it, and then close the paper support.
3. Pull the paper tray (1) completely out of the machine as shown by the arrow.

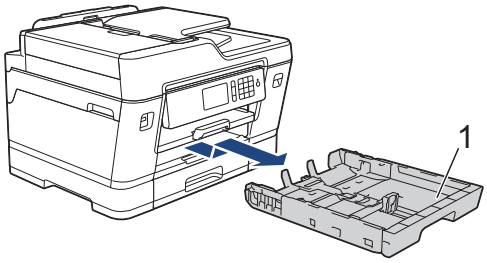

4. Lift the paper support (1), and then pull it at an angle completely out of the machine as shown by the arrow.

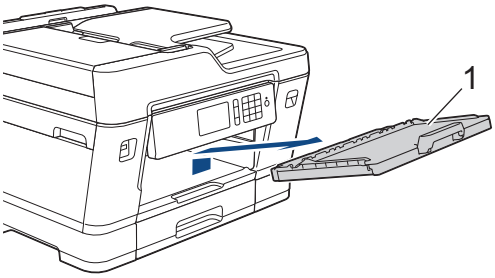

5. Clean the front side of the Paper Feed Rollers (1) with a soft lint-free cloth moistened with water, using a side-to-side motion. After cleaning, wipe the rollers with a dry, soft lint-free cloth to remove all moisture.

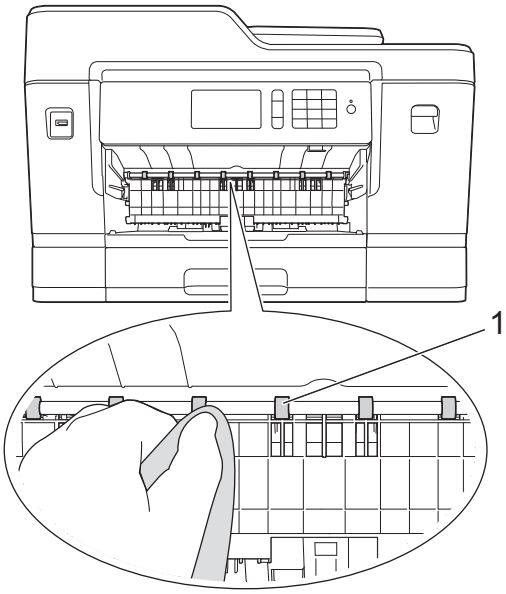

6. Lift the Jam Clear Flap (2), and then clean the back side of the Paper Feed Rollers (1) with a soft lint-free cloth moistened with water. After cleaning, wipe the rollers with a dry, soft lint-free cloth to remove all moisture.

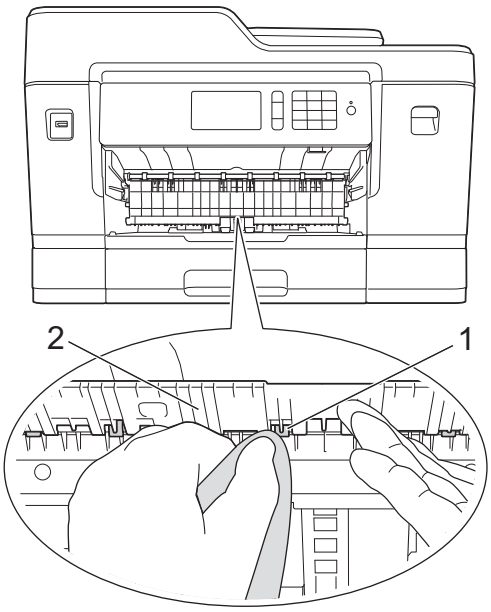

7. Put the paper support firmly back in the machine. Make sure you fit the paper support into the channels.

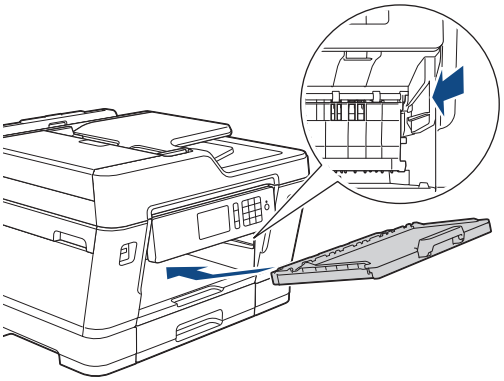

8. Slowly push the paper tray completely into the machine.
9. Reconnect the power cord.

Do not use the machine again until the rollers are dry. Using the machine before the rollers are dry may cause paper feed problems.

Related Information

- Clean Your Brother Machine
- Paper Handling and Printing Problems

Clean the Base Pad

Cleaning the Base Pad periodically may prevent the machine from feeding multiple sheets of paper when there are only a few sheets of paper left in the tray.

1. If the paper support flap is open, close it, and then close the paper support.
2. Pull the paper trays (1) completely out of the machine as shown by the arrow.

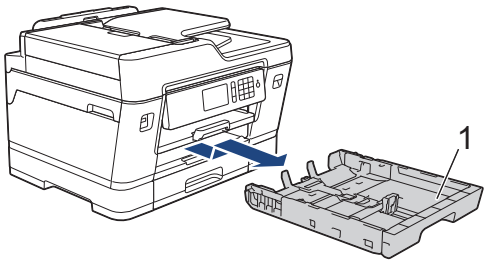

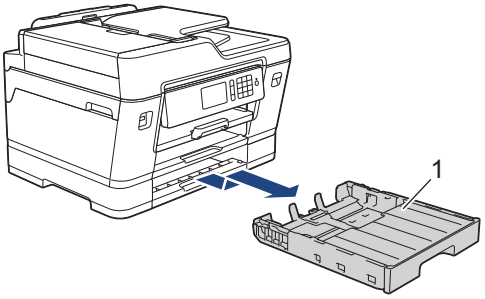

3. Clean the Base Pad (1) with a soft lint-free cloth moistened with water.
   After cleaning, wipe the pad with a dry, soft lint-free cloth to remove all moisture.

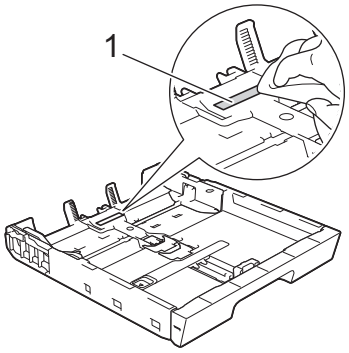

4. Slowly push the paper trays completely into the machine.

Related Information

- Clean Your Brother Machine
- Paper Handling and Printing Problems

Clean the Paper Pick-up Rollers

Cleaning the paper pick-up rollers periodically may prevent paper jams by ensuring that paper feeds properly.

1. Unplug the machine from the electrical socket.
2. If the paper support flap is open, close it, and then close the paper support.
3. Pull the paper tray (1) completely out of the machine as shown by the arrow.

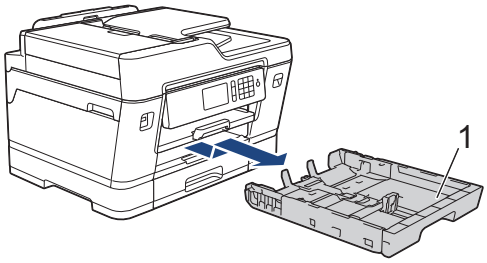

4. Lift the paper support (1), and then pull it at an angle completely out of the machine as shown by the arrow.

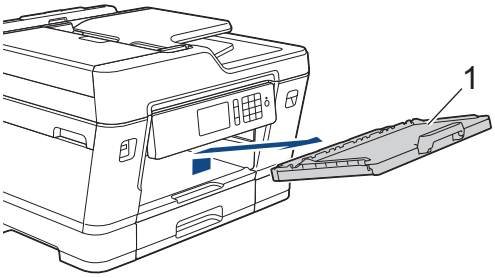

5. Clean the Paper Pick-up Rollers (1) with a soft lint-free cloth moistened with water. Slowly turn the rollers so that the whole surface is cleaned. After cleaning, wipe the rollers with a dry, soft lint-free cloth to remove all moisture.

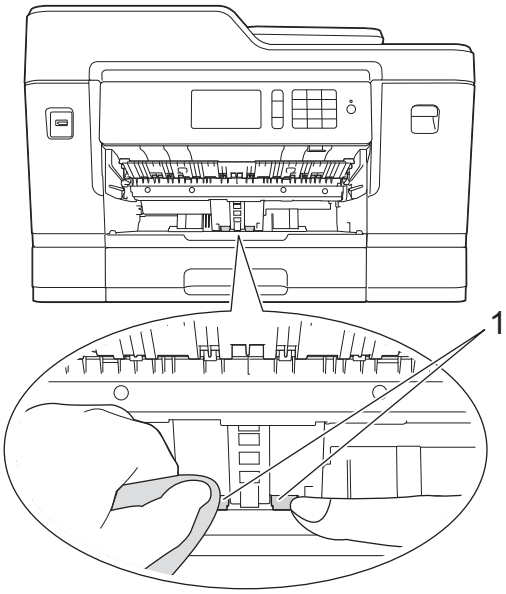

6. Put the paper support firmly back in the machine. Make sure you fit the paper support into the channels.

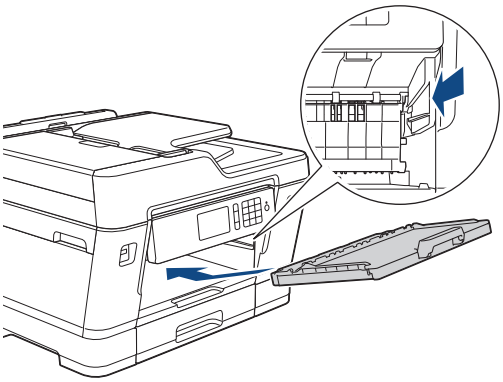

7. Slowly push the paper tray completely into the machine.
8. Reconnect the power cord.

Related Information

- Clean Your Brother Machine
- Error and Maintenance Messages
- Paper Handling and Printing Problems

Clean the Paper Pick-up Rollers for Paper Tray #2

Related Models: MFC-J3930DW

1. Unplug the machine from the electrical socket.
2. If the paper support flap is open, close it, and then close the paper support.
3. Pull tray #2 (1) completely out of the machine as shown by the arrow.

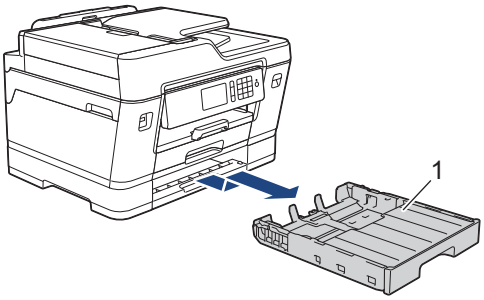

4. Clean the paper pick-up rollers for tray #2 (1) with a soft lint-free cloth moistened with water. Slowly turn the rollers so that the whole surface is cleaned. After cleaning, wipe the rollers with a dry, soft lint-free cloth to remove all moisture.

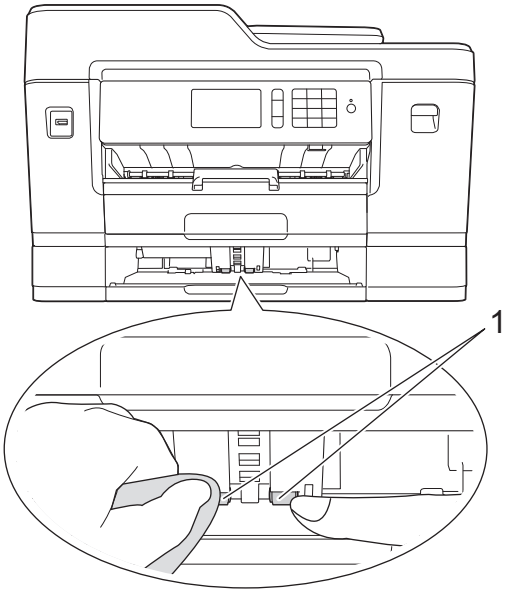

5. Slowly push tray #2 completely into the machine.
6. Reconnect the power cord.

Related Information

- Clean Your Brother Machine

Check Your Brother Machine

- Check the Print Quality
- Check the Print Alignment from Your Brother Machine
- Check the Print Alignment from Your Computer (Windows)
- Check the Print Alignment from Your Computer (Mac)
- Check the Ink Volume
- Monitor Machine Status from Your Computer (Windows)
- Monitor Machine Status from Your Computer (Mac)

Check the Print Quality

If faded or streaked colours and text appear or if text is missing on your printouts, the print head nozzles may be clogged. Print the Print Quality Check Sheet and look at the nozzle check pattern.

>> MFC-J3530DW
>> MFC-J3930DW

MFC-J3530DW

1. Press [Ink] > [Improve Print Quality] > [Check Print Quality].

   You can also press [Settings] > [Maintenance] > [Improve Print Quality] > [Check Print Quality].

2. Press [Start].

   The machine prints the Print Quality Check Sheet.

3. Check the quality of the four colour blocks on the sheet.
4. The touchscreen asks about the print quality. Do one of the following:
   - If all lines are clear and visible, press [No], and then press to finish the Print Quality check.
   - If lines are missing (see **Poor**, below), press [Yes].

     OK

     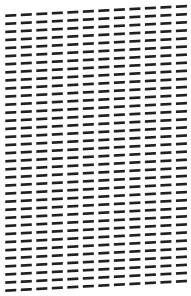

     Poor

     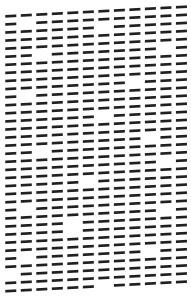

5. The touchscreen asks you to check the print quality of each colour. Press the number of the pattern (1–4) that most closely matches the printing result.
6. Do one of the following:
   - If print head cleaning is needed, press [Start] to start the cleaning procedure.
   - If print head cleaning is not needed, the Maintenance screen reappears on the touchscreen. Press .
7. After the cleaning procedure is finished, the touchscreen asks if you want to print the Print Quality Check Sheet again. Press [Yes], and then press [Start].

   The machine prints the Print Quality Check Sheet again. Check the quality of the four colour blocks on the sheet again.

If you clean the print head and the print has not improved, try installing a new Brother Original replacement ink cartridge for each problem colour. Try cleaning the print head again. If the print has not improved, contact Brother customer service or your local Brother dealer.

IMPORTANT

DO NOT touch the print head. Touching the print head may cause permanent damage and may void the print head's warranty.

When a print head nozzle is clogged, the printed sample looks like this.

After the print head nozzle is cleaned, the lines are gone.

MFC-J3930DW

1. Press [Ink] > [Improve Print Quality] > [Check Print Quality].

   You can also press [Settings] > [Maintenance] > [Improve Print Quality] > [Check Print Quality].

2. Press [Start].

   The machine prints the Print Quality Check Sheet.

3. Check the quality of the four colour blocks on the sheet.
4. The touchscreen asks about the print quality. Do one of the following:
   - If all lines are clear and visible, press [No], and then press to finish the Print Quality check.
   - If lines are missing (see **Poor**, below), press [Yes].

     OK

     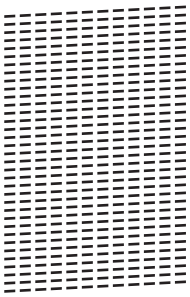

Poor

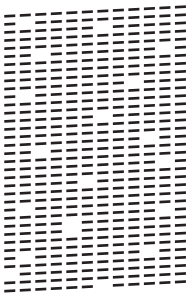

5. The touchscreen asks you to check the print quality of each colour. Press the number of the pattern (1–4) that most closely matches the printing result.
6. Do one of the following:
   - If print head cleaning is needed, press `[Start]` to start the cleaning procedure.
   - If print head cleaning is not needed, the Maintenance screen reappears on the touchscreen. Press .
7. After the cleaning procedure is finished, the touchscreen asks if you want to print the Print Quality Check Sheet again. Press `[Yes]`, and then press `[Start]`.

   The machine prints the Print Quality Check Sheet again. Check the quality of the four colour blocks on the sheet again.

If you clean the print head and the print has not improved, try installing a new Brother Original replacement ink cartridge for each problem colour. Try cleaning the print head again. If the print has not improved, contact Brother customer service or your local Brother dealer.

IMPORTANT

DO NOT touch the print head. Touching the print head may cause permanent damage and may void the print head's warranty.

When a print head nozzle is clogged, the printed sample looks like this.

After the print head nozzle is cleaned, the lines are gone.

Related Information

- Check Your Brother Machine
- Paper Handling and Printing Problems

Check the Print Alignment from Your Brother Machine

If your printed text becomes blurred or images become faded after transporting the machine, adjust the print alignment.

>> MFC-J3530DW
>> MFC-J3930DW

MFC-J3530DW

1. Press [Ink] > [Improve Print Quality] > [Alignment].

   You can also press [Settings] > [Maintenance] > [Improve Print Quality] > [Alignment].

2. Press [Next].
3. Press ▲ or ▼ to display the paper size that needs a print alignment adjustment, and then press it.
4. Press [Basic alignment] or [Advanced alignment].
5. Load the selected paper size in the tray, and then press [Start].

   The machine prints the Alignment Check Sheet.

   (A)

   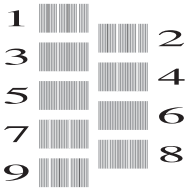

6. For the (A) pattern, press ▲ or ▼ to display the number of the test print with the fewest visible vertical stripes (1-9), and then press it (in the example above, row number 6 is the best choice). Press [OK].

   Repeat this step for the rest of the patterns.

   When the print alignment is not adjusted correctly, text looks blurry or crooked, like this.

   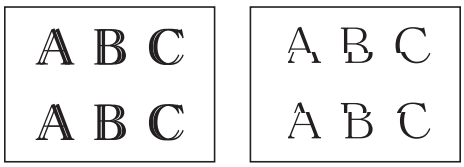

   After the print alignment is adjusted correctly, text looks like this.

7. Press .

MFC-J3930DW

1. Press [Ink] > [Improve Print Quality] > [Alignment].

You can also press [Settings] > [Maintenance] > [Improve Print Quality] > [Alignment].

2. Press [Next].
3. Swipe up or down or press ▲ or ▼ to display the paper size that needs a print alignment adjustment, and then press it.
4. Press [Basic alignment] or [Advanced alignment].
5. Load the selected paper size in the tray, and then press [Start].

   The machine prints the Alignment Check Sheet.

   (A)

   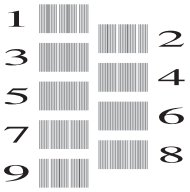

6. For the “A” pattern, swipe up or down or press ▲ or ▼ to display the number of the test print with the least visible vertical stripes (1-9), and then press it (in the example, number 6 is the best choice). Press [OK].

   Repeat this step for the rest of the patterns.

When the print alignment is not adjusted correctly, text looks blurry like this.

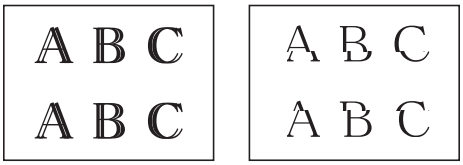

After the print alignment is adjusted correctly, text looks like this.

7. Press .

Related Information

- Check Your Brother Machine
- Paper Handling and Printing Problems

Check the Print Alignment from Your Computer (Windows)

If your printed text becomes blurred or images become faded after transporting the machine, adjust the print alignment.

1. Do one of the following:
   - For Windows Vista and Windows Server 2008

     Click **(Start)** > **Control Panel** > **Hardware and Sound** > **Printers**.
   - For Windows 7 and Windows Server 2008 R2

     Click **(Start)** > **Devices and Printers**.
   - For Windows 8

     Move your mouse to the lower right corner of your desktop. When the menu bar appears, click **Settings**, and then click **Control Panel**. In the **Hardware and Sound** group, click **View devices and printers**.
   - For Windows Server 2012

     Move your mouse to the lower right corner of your desktop. When the menu bar appears, click **Settings**, and then click **Control Panel**. In the **Hardware** group, click **View devices and printers**.
   - For Windows Server 2012 R2

     Click **Control Panel** on the **Start** screen. In the **Hardware** group, click **View devices and printers**.
   - For Windows 10

     Click > **All apps** > **Windows System** > **Control Panel**. In the **Hardware and Sound** group, click **View devices and printers**.
2. Right-click the **Brother MFC-XXXX Printer** icon (where XXXX is your model name), and then select **Printer properties**. If printer driver options appear, select your printer driver.
3. Click the **General** tab, and then click the **Printing Preferences...** or **Preferences...** button.

   The printer driver dialog box appears.
4. Click the **Advanced** tab.
5. Click the **Other Print Options** button.
6. Select the **Reduce Uneven Lines** option.
7. Select one of the following options:

Option	Description
A3, JIS B4, Ledger	Adjust the print alignment for A3, JIS B4 (available only for some countries) and Ledger size paper.
A4, Letter	Adjust the print alignment for A4 and Letter size paper.
Other Sizes	Adjust the print alignment for other paper sizes.

8. Click **OK** to return to the printer driver window.
9. Click **OK**.

Related Information

- Check Your Brother Machine
- Paper Handling and Printing Problems
- Change the Print Setting Options When Having Printing Problems

Check the Print Alignment from Your Computer (Mac)

If your printed text becomes blurred or images become faded after transporting the machine, adjust the print alignment.

1. From an application, such as Apple TextEdit, click the **File** menu, and then select **Print**.
2. Select **Brother MFC-XXXX** (where XXXX is your model name).

For more page setup options, click the **Show Details** button.

3. Click the application pop-up menu, and then select **Print Settings**.

   The **Print Settings** options appear.
4. Click the **Advanced** print settings list.
5. Click the **Reduce Uneven Lines** menu.
6. Select one of the following options:

Option	Description
A3, JIS B4, Ledger	Adjust the print alignment for A3, JIS B4 (available only for some countries) and Ledger size paper.
A4, Letter	Adjust the print alignment for A4 and Letter size paper.
Other Sizes	Adjust the print alignment for other paper sizes.

7. Change other printer settings, if needed.
8. Click **Print**.

Related Information

- Check Your Brother Machine
- Paper Handling and Printing Problems
- Change the Print Setting Options When Having Printing Problems

Check the Ink Volume

Although an ink volume icon appears on the machine's LCD, you can use the ink menu to see a large graph showing the ink left in each cartridge.

>> MFC-J3530DW
>> MFC-J3930DW

MFC-J3530DW

1. Press [Ink] > [Ink Volume]. The touchscreen displays the ink volume.

- You can also press [Settings] > [Maintenance] > [Ink Volume].
- When the ink cartridge is near the end of its life or having a problem, one of the following icons is displayed.

	The ink level is low.
	The ink cartridge is at the end of its life.
	There is a problem with the ink cartridge.

- To check or print the model numbers of the ink cartridges, press (Back) to go back to the [Ink] menu screen.
  Press [Ink Cartridge Model], and follow the instruction on the touchscreen.

2. Press .

You can also check the ink volume from your computer.

MFC-J3930DW

1. Press [Ink] > [Ink Volume]. The touchscreen displays the ink volume.

- You can also press [Settings] > [Maintenance] > [Ink Volume].
- When the ink cartridge is near the end of its life or having a problem, one of the following icons is displayed.

	The ink level is low.
	The ink cartridge is at the end of its life.
	There is a problem with the ink cartridge.

- To check or print the model numbers of the ink cartridges, press (Back) to go back to the [Ink] menu screen.
  Press [Ink Cartridge Model], and follow the instruction on the touchscreen.

2. Press .

You can also check the ink volume from your computer.

Related Information

- Check Your Brother Machine
- Touchscreen LCD Overview
- Settings Screen Overview
- Print a Document (Windows)
- Print a Document (Mac)
- Monitor Machine Status from Your Computer (Windows)

Monitor Machine Status from Your Computer (Windows)

The Status Monitor utility is a configurable software tool for monitoring the status of one or more devices; it allows you to get immediate notification of errors.

- Do one of the following:
  - Double-click the icon in the task tray.
  - Windows Vista and Windows 7

    Click (**Start**) > **All Programs** > **Brother** > **Brother Utilities**.

    Click the drop-down list and select your model name (if not already selected). Click **Tools** in the left navigation bar, and then click **Status Monitor**.
  - Windows 8 and Windows 10

    Click (**Brother Utilities**), and then click the drop-down list and select your model name (if not already selected). Click **Tools** in the left navigation bar, and then click **Status Monitor**.

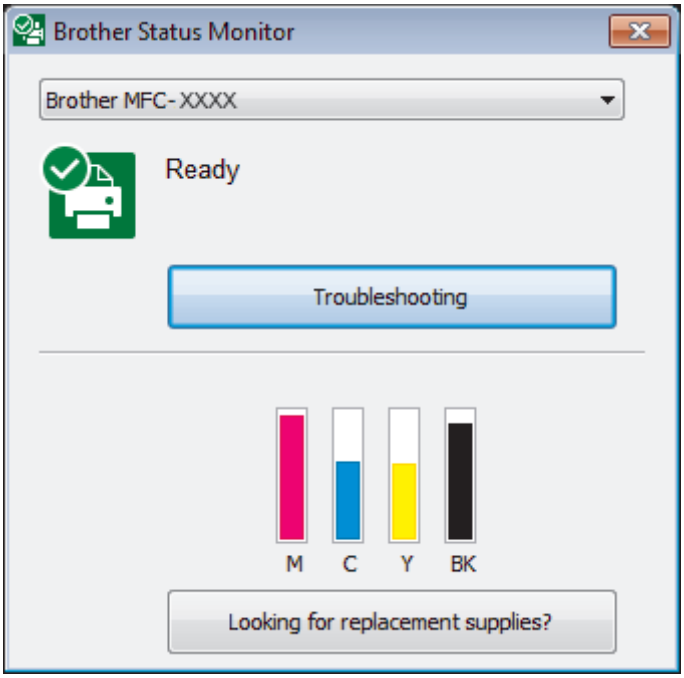

Troubleshooting

Click the **Troubleshooting** button to access the troubleshooting website.

Looking for replacement supplies?

Click the **Looking for replacement supplies?** button for more information on Brother original supplies.

Error icons

Icon	Description
	The ink level is low.
	The ink cartridge is at the end of its life.
	There is a problem with the ink cartridge.

Related Information

- Check Your Brother Machine

- Status Monitor Indicators and What They Mean (Windows)
- Turn Off the Show Status Monitor Feature (Windows)
- Turn Off the Status Monitor (Windows)
- Cancel a Print Job (Windows)
- Check the Ink Volume

Status Monitor Indicators and What They Mean (Windows)

When you start up your computer, the **Brother Status Monitor** icon appears on the task tray.

- A green icon indicates the normal stand-by condition.

- A yellow icon indicates a warning.

- A red icon indicates an error has occurred.

- A grey icon indicates the machine is offline.

Related Information

- Monitor Machine Status from Your Computer (Windows)

Turn Off the Show Status Monitor Feature (Windows)

The Show Status Monitor feature lets you know if there is a problem with a device that your computer is monitoring. The default setting is **Only when printing from this PC**. To turn it off, follow these steps:

1. Right-click the (**Brother Status Monitor**) icon or window, select the **Status Monitor Settings** option, and then click **Options**.

   The **Options** window appears.
2. Select the **Basic** tab, and then select **Off** for **Show Status Monitor**.
3. Click **OK**.

Even if the Show Status Monitor feature is turned off, you can check the machine's status at any time by displaying the Status Monitor.

Related Information

- Monitor Machine Status from Your Computer (Windows)

Turn Off the Status Monitor (Windows)

1. Right-click the (**Brother Status Monitor**) icon or window, and then select **Exit**.
2. Click **OK**.

Related Information

- Monitor Machine Status from Your Computer (Windows)

Monitor Machine Status from Your Computer (Mac)

Brother's Status Monitor utility program is a configurable software tool for monitoring the status of a device and notifying you immediately in the event of an error. You can also use Brother's Status Monitor to access Web Based Management.

1. Select **System Preferences** from the Apple menu.
2. Select **Printers & Scanners**, and then select the machine.
3. Click the **Options & Supplies** button.
4. Click the **Utility** tab, and then click the **Open Printer Utility** button.

   The Status Monitor screen appears.

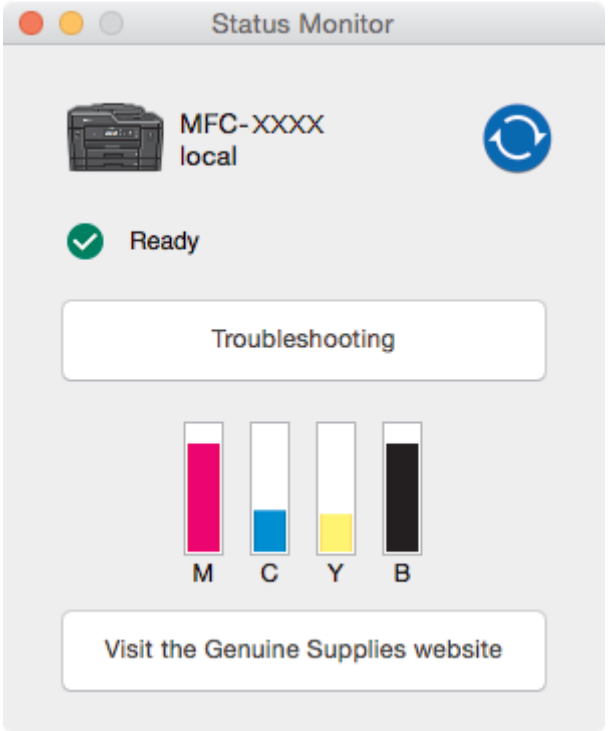

Troubleshooting

Click the **Troubleshooting** button to access the Brother Solutions Center, offering FAQs and troubleshooting tips.

Visit the Genuine Supplies website

Click the **Visit the Genuine Supplies website** button for more information about Brother original supplies.

Updating the machine's status

To view the latest machine status while the **Status Monitor** window is open, click the icon. To set the interval at which the software updates the machine status information, click the **Brother Status Monitor** menu, and then select **Preferences**.

Web Based Management (Network Connection Only)

Access the Web Based Management system by clicking the machine icon on the **Status Monitor** screen. You can use a standard web browser to manage your machine using Hyper Text Transfer Protocol (HTTP).

Error icons

Icon	Description
	The ink level is low.
	The ink cartridge is at the end of its life.

Icon	Description
	There is a problem with the ink cartridge.

Related Information

- Check Your Brother Machine
- Access Web Based Management

Correct the Paper Feed to Clear Vertical Lines

Adjust the paper feed to reduce vertical lines.

>> MFC-J3530DW
>> MFC-J3930DW

MFC-J3530DW

1. Press [Ink] > [Improve Print Quality] > [Correct Paper Feed].

You can also press [Settings] > [Maintenance] > [Improve Print Quality] > [Correct Paper Feed].

2. Press the [Next] button, and then follow the instructions on the touchscreen.

MFC-J3930DW

1. Press [Ink] > [Improve Print Quality] > [Correct Paper Feed].

You can also press [Settings] > [Maintenance] > [Improve Print Quality] > [Correct Paper Feed].

2. Press the [Next] button, and then follow the instructions on the touchscreen.

Related Information

- Routine Maintenance
- Other Problems

Change the Print Setting Options When Having Printing Problems

If your print result is poor quality, select these options depending on your purpose. When these settings are selected, the printing speed is slower.

These options are available only when performing operations from the machine, such as copying. When printing from your computer, change the settings in the printer driver.

>> MFC-J3530DW
>> MFC-J3930DW

MFC-J3530DW

1. Press [Settings] > [Maintenance] > [Print Setting Options].
2. Press one of the following options:

Option	Description
Reduce Smudging	Select this option according to your paper type and whether you are using 1-sided or 2-sided printing if you have problems with smudged printouts or paper jams.
Reduce Uneven Lines	Select this option according to your paper size if you have problems with uneven lines.
Slow Drying Paper	Select this option if you use a type of plain paper on which ink dries slowly.

3. Follow the LCD menus.
4. Press .

MFC-J3930DW

1. Press [Settings] > [Maintenance] > [Print Setting Options].
2. Press one of the following options:

Option	Description
Reduce Smudging	Select this option according to your paper type and whether you are using 1-sided or 2-sided printing if you have problems with smudged printouts or paper jams.
Reduce Uneven Lines	Select this option according to your paper size if you have problems with uneven lines.
Slow Drying Paper	Select this option if you use a type of plain paper on which ink dries slowly.

3. Follow the LCD menus.
4. Press .

Related Information

- Routine Maintenance
- Copy on Both Sides of the Paper (2-sided Copy)
- Paper Handling and Printing Problems
- Prevent Smudged Printouts and Paper Jams (Windows)

- Prevent Smudged Printouts and Paper Jams (Mac)
- Check the Print Alignment from Your Computer (Windows)
- Check the Print Alignment from Your Computer (Mac)
- Print Settings (Windows)
- Print Options (Mac)

Pack and Ship Your Brother Machine

- When you transport the machine, use the packing materials that came with your machine. If you do not pack the machine correctly, any damage that may occur in transit may not be covered by your warranty.
- The machine should be adequately insured with the carrier.

IMPORTANT

It is important to allow the machine to “park” the print head after a print job. Listen carefully to the machine before unplugging it to make sure that all mechanical noises have stopped. Not allowing the machine to finish this parking process may lead to print problems and possible damage to the print head.

1. Unplug the machine from the electrical socket.
2. Using both hands, use the finger holds on each side of the machine to lift the scanner cover into the open position. Then unplug the machine from the telephone wall socket and take the telephone line cord out of the machine.
3. Unplug the interface cable from the machine, if it is connected.
4. Remove the orange protective part from its storage place inside the machine.

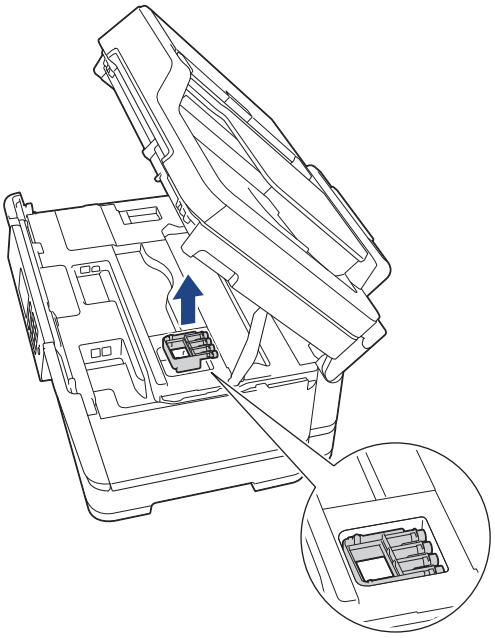

5. Gently close the scanner cover using the finger holds on each side.

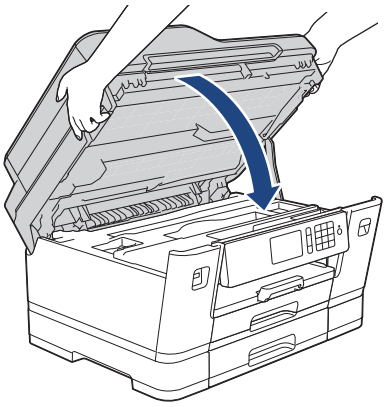

6. Open the ink cartridge cover.
7. Press the ink release levers to release the ink cartridges and then take out the ink cartridges.
8. Install the orange protective part and then close the ink cartridge cover.

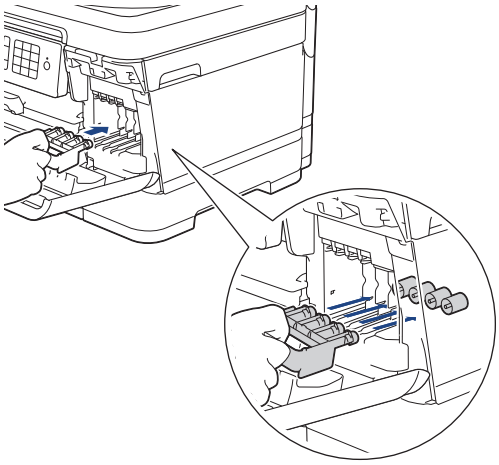

IMPORTANT

- Make sure the plastic tab on the left side of the orange protective part (1) clicks securely into place (2).

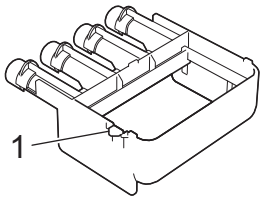

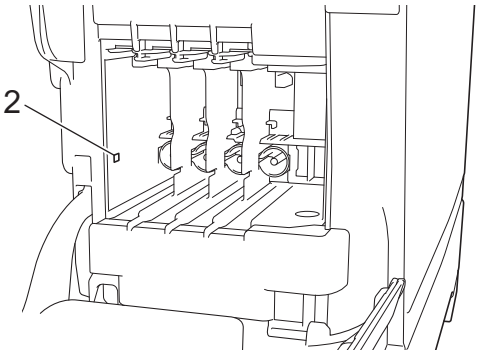

- If you are not able to find the orange protective part, ship the machine without it. DO NOT leave the ink cartridges in the machine during shipping.

9. Wrap the machine in the bag.

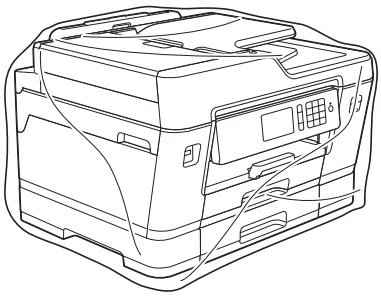

10. Pack the machine in the original carton with the original packing material as shown below.

    Do not pack the used ink cartridge in the carton.

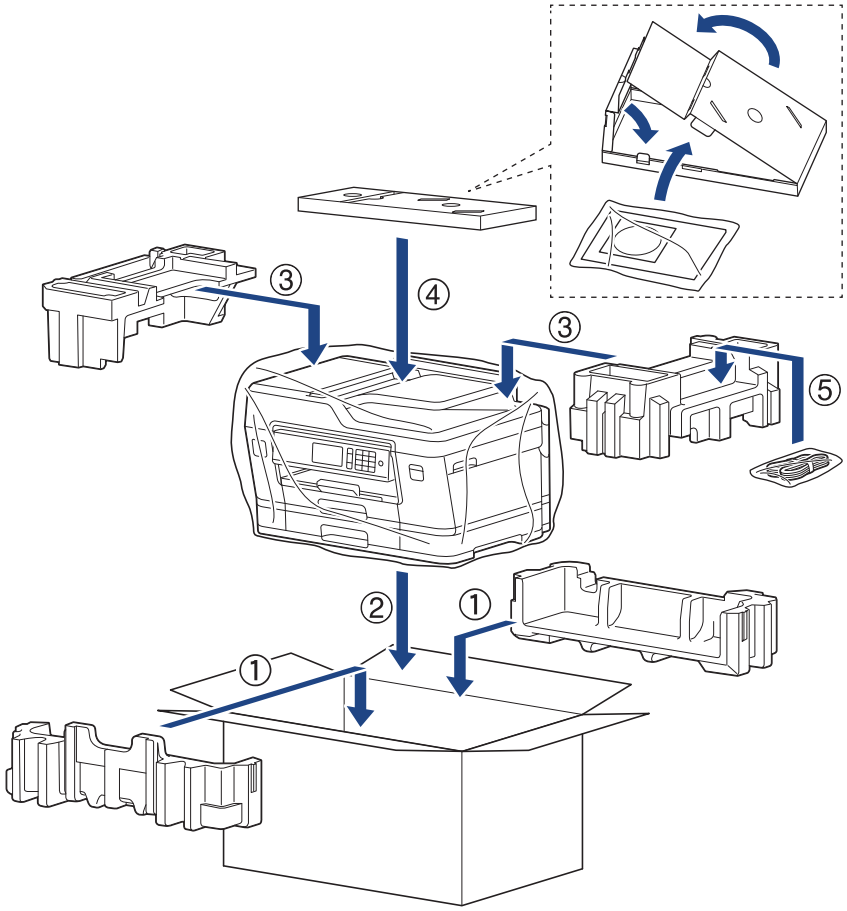

11. Close the carton and tape it shut.

Related Information

- Routine Maintenance
- Replace the Ink Cartridges

Machine Settings

Customise settings and features, create shortcuts, and work with options displayed on the machine's LCD to make your Brother machine a more efficient work tool.

- Change Machine Settings from the Control Panel
- Change Machine Settings from Your Computer

Change Machine Settings from the Control Panel

- In the Event of Power Failure (Memory Storage)
- General Settings
- Save Your Favourite Settings as a Shortcut
- Print Reports
- Settings and Features Tables

In the Event of Power Failure (Memory Storage)

- Your menu settings are stored permanently and will not be lost.
- Temporary settings (for example: Contrast and Overseas Mode) will be lost.
- The date and time and programmed fax timer jobs (for example: Delayed Fax) will be retained for approximately 24 hours.
- Other fax jobs in the machine's memory will not be lost.

Related Information

- Change Machine Settings from the Control Panel

General Settings

- Adjust the Machine Volume
- Set Sleep Mode Countdown
- Set the Machine to Power Off Automatically
- Set the Date & Time
- Set the Time Zone
- Adjust the LCD Backlight Brightness
- Change How Long the LCD Backlight Stays On
- Set Your Station ID
- Set Tone or Pulse Dialling Mode
- Set a Prefix Dial Before Every Fax Number
- Prevent Dialling a Wrong Number (Dial Restriction)
- Reduce Printing Noise
- Change the Language Displayed on the LCD
- Change the Keyboard Setting

Adjust the Machine Volume

>> MFC-J3530DW
>> MFC-J3930DW

MFC-J3530DW

1. Press [Settings] > [All Settings] > [General Setup] > [Volume].
2. Press one of the following options:

Option	Description
Ring	Adjust the ring volume.
Beep	Adjust the volume when you press a button, make a mistake, or after you send or receive a fax.
Speaker	Adjust the speaker volume.

3. Press ▲ or ▼ to display the [Off], [Low], [Med], or [High] option, and then press the option you want.
4. Press .

MFC-J3930DW

1. Press [Settings] > [All Settings] > [General Setup] > [Volume].
2. Press one of the following options:

Option	Description
Ring	Adjust the ring volume.
Beep	Adjust the volume when you press a button, make a mistake, or after you send or receive a fax.
Speaker	Adjust the speaker volume.

3. Press the [Off], [Low], [Med], or [High] option.
4. Press .

Related Information

- General Settings

Set Sleep Mode Countdown

The Sleep Mode (or Power Save Mode) setting can reduce power consumption. When the machine is in Sleep Mode, it acts as though it is turned off. The machine will wake up and start printing when it receives a print job or a fax. Use these instructions to set a time delay (countdown) before the machine enters Sleep Mode.

- The timer will restart if any operation is carried out on the machine, such as receiving a fax or a print job.
- The factory setting is five minutes.
- When the machine goes into Sleep Mode, the LCD backlight turns off.

>> MFC-J3530DW
>> MFC-J3930DW

MFC-J3530DW

1. Press [Settings] > [All Settings] > [General Setup] > [Sleep Mode].
2. Press ▲ or ▼ to display the [1Min], [2Mins], [3Mins], [5Mins], [10Mins], [30Mins], or [60Mins] option, and then press the option you want.
3. Press .

MFC-J3930DW

1. Press [Settings] > [All Settings] > [General Setup] > [Sleep Mode].
2. Swipe up or down or press ▲ or ▼ to display the [1Min], [2Mins], [3Mins], [5Mins], [10Mins], [30Mins], or [60Mins] option, and then press the option you want.
3. Press .

Related Information

- General Settings
- Set the Machine to Power Off Automatically

Set the Machine to Power Off Automatically

The Auto Power Off feature can save power consumption. Set the amount of time that the machine will be in Sleep Mode before it automatically powers off. When this feature is set to [Off], you must power off the machine manually.

To turn on the machine after the Auto Power Off feature has turned it Off, press .

The machine will not power off automatically when:

- The machine is connected to a telephone line.
- The machine is connected to a wired network.
- The machine is connected to a wireless network.
- [WLAN Enable] is set to [On] or [WLAN] is selected in the [Network I/F] setting.

>> MFC-J3530DW
>> MFC-J3930DW

MFC-J3530DW

1. Press [Settings] > [All Settings] > [General Setup] > [Auto Power Off].
2. Press ▲ or ▼ to display the [Off], [1hour], [2hours], [4hours], or [8hours] option, and then press the option you want.
3. Press .

MFC-J3930DW

1. Press [Settings] > [All Settings] > [General Setup] > [Auto Power Off].
2. Swipe up or down or press ▲ or ▼ to display the [Off], [1hour], [2hours], [4hours], or [8hours] option, and then press the option you want.
3. Press .

Related Information

- General Settings
- Set the Fax Journal's Interval Period
- Set Sleep Mode Countdown

Set the Date & Time

The LCD displays the date and time. If they are not current, re-enter them. You can add the date and time to each fax you send by setting your Station ID.

>> MFC-J3530DW
>> MFC-J3930DW

MFC-J3530DW

1. Press [Settings].
2. Press [Date & Time].
3. Press [Date].
4. Enter the last two digits of the year on the touchscreen, and then press [OK].
5. Enter two digits for the month on the touchscreen, and then press [OK].
6. Enter two digits for the day on the touchscreen, and then press [OK].
7. Press [Time].
8. Enter the time (in 24-hour format) using the touchscreen.
   Press [OK].
   (For example, enter 19:45 for 7:45 PM.)
9. Press .

MFC-J3930DW

1. Press [Settings].
2. Press [Date & Time].
3. Press [Date].
4. Enter the last two digits of the year on the touchscreen, and then press [OK].
5. Enter two digits for the month on the touchscreen, and then press [OK].
6. Enter two digits for the day on the touchscreen, and then press [OK].
7. Press [Time].
8. Enter the time (in 24-hour format) using the touchscreen.
   Press [OK].
   (For example, enter 19:45 for 7:45 PM.)
9. Press .

Related Information

- General Settings
- Set Your Station ID

Set the Time Zone

Set the time zone for your location on the machine.

>> MFC-J3530DW
>> MFC-J3930DW

MFC-J3530DW

1. Press [Settings].
2. Press [Date & Time] > [Time Zone].
3. Enter your time zone.
4. Press [OK].
5. Press .

MFC-J3930DW

1. Press [Settings].
2. Press [Date & Time] > [Time Zone].
3. Enter your time zone.
4. Press [OK].
5. Press .

Related Information

- General Settings

Adjust the LCD Backlight Brightness

If you are having difficulty reading the LCD, changing the brightness setting may help.

>> MFC-J3530DW
>> MFC-J3930DW

MFC-J3530DW

1. Press [Settings] > [All Settings] > [General Setup] > [LCD Settings] > [Backlight].
2. Press the [Light], [Med], or [Dark] option.
3. Press .

MFC-J3930DW

1. Press [Settings] > [All Settings] > [General Setup] > [LCD Settings] > [Backlight].
2. Press the [Light], [Med], or [Dark] option.
3. Press .

Related Information

- General Settings

Change How Long the LCD Backlight Stays On

You can set how long the LCD backlight stays on after the last finger press.

>> MFC-J3530DW
>> MFC-J3930DW

MFC-J3530DW

1. Press [Settings] > [All Settings] > [General Setup] > [LCD Settings] > [Dim Timer].
2. Press ▲ or ▼ to display the [10Secs], [30Secs], [1Min], [2Mins], [3Mins], or [5Mins] option, and then press the option you want.
3. Press .

MFC-J3930DW

1. Press [Settings] > [All Settings] > [General Setup] > [LCD Settings] > [Dim Timer].
2. Swipe up or down or press ▲ or ▼ to display the [10Secs], [30Secs], [1Min], [2Mins], [3Mins], or [5Mins] option, and then press the option you want.
3. Press .

Related Information

- General Settings

Set Your Station ID

Set the machine's Station ID if you want the date and time to appear on each fax you send.

>> MFC-J3530DW
>> MFC-J3930DW

MFC-J3530DW

1. Press [Settings] > [All Settings] > [Initial Setup] > [Station ID].
2. Press [Fax].
3. Enter your fax number (up to 20 digits) on the touchscreen, and then press [OK].
4. Press [Name].
5. Enter your name (up to 20 characters) using the touchscreen, and then press [OK].

- Press A 1 @ to cycle between letters, numbers and special symbols. (The available characters may differ depending on your country.)
- If you entered an incorrect character and want to change it, press ◀ or ▶ to move the cursor to it. Press ⌫ and then enter the correct character.
- To enter a space, press [Space].

6. Press .

MFC-J3930DW

1. Press [Settings] > [All Settings] > [Initial Setup] > [Station ID].
2. Press [Fax].
3. Enter your fax number (up to 20 digits) on the touchscreen, and then press [OK].
4. Press [Name].
5. Enter your name (up to 20 characters) using the touchscreen, and then press [OK].

- Press A 1 @ to cycle between letters, numbers and special symbols. (The available characters may differ depending on your country.)
- If you entered an incorrect character and want to change it, press ◀ or ▶ to move the cursor to it. Press ⌫ and then enter the correct character.
- To enter a space, press [Space].

6. Press .

Related Information

- General Settings
- Transfer Faxes to Another Fax Machine
- Transfer the Fax Journal Report to Another Fax Machine
- Enter Text on Your Brother Machine
- Set the Date & Time

Set Tone or Pulse Dialling Mode

Your Brother machine is set for a Tone dialling service. If you have a Pulse dialling (rotary) service, you must change the dialling mode.

This feature is not available in some countries.

>> MFC-J3530DW
>> MFC-J3930DW

MFC-J3530DW

1. Press [Settings] > [All Settings] > [Initial Setup] > [Tone/Pulse].
2. Press [Tone] or [Pulse].
3. Press .

MFC-J3930DW

1. Press [Settings] > [All Settings] > [Initial Setup] > [Tone/Pulse].
2. Press [Tone] or [Pulse].
3. Press .

Related Information

- General Settings
- Telephone and Fax problems

Set a Prefix Dial Before Every Fax Number

The Dial Prefix setting will automatically dial a predefined number before every fax number you dial. For example: If your telephone system requires a 9 to dial an outside number, use this setting to automatically dial 9 for every fax you send.

- Use the numbers and symbols from 0 to 9, #, and *. (You cannot use ! with any other numbers or symbols.)
- If your telephone system requires a time break recall (hookflash), press ! on the LCD.
- If pulse dialing mode is on, # and * are not available to use.

>> MFC-J3530DW
>> MFC-J3930DW

MFC-J3530DW

1. Press [Settings] > [All Settings] > [Initial Setup] > [Dial Prefix].
2. Press [On] or [Off].
   - You can turn off the prefix number by pressing [Off].
   - The prefix number will remain off until you press [On].
3. Press [Dial Prefix].
4. Enter the prefix number (up to 5 digits) using the touchscreen, and then press [OK].

To change the prefix number, press ◀ or ▶ to position the cursor under the digit to be deleted and press the Back Space button. Then press the correct digit.

Repeat until the prefix number is correct, and then press [OK].

5. Press .

MFC-J3930DW

1. Press [Settings] > [All Settings] > [Initial Setup] > [Dial Prefix].
2. Press [On] or [Off].
   - You can turn off the prefix number by pressing [Off].
   - The prefix number will remain off until you press [On].
3. Press [Dial Prefix].
4. Enter the prefix number (up to 5 digits) using the touchscreen, and then press [OK].

To change the prefix number, press ◀ or ▶ to position the cursor under the digit to be deleted and press the Back Space button. Then press the correct digit.

Repeat until the prefix number is correct, and then press [OK].

5. Press .

Related Information

- General Settings

Prevent Dialling a Wrong Number (Dial Restriction)

This feature is to prevent users from sending a fax or call to wrong number by mistake. You can set the machine to restrict Dialling when you use the dial pad, Address Book and Shortcuts.

>> MFC-J3530DW
>> MFC-J3930DW

MFC-J3530DW

1. Press [Settings] > [All Settings] > [Fax] > [Dial Restriction].
2. Press one of the following options:
   - [Dial Pad]
   - [Address Book]

   If you combine Address Book numbers when dialling, the address will be recognised as dial pad input and will not be restricted.

   - [Shortcuts]
3. Press one of the following options:

Option	Description
Enter # Twice	The machine will prompt you to re-enter the number. If you re-enter the same number correctly, the machine will start dialling. If you re-enter the wrong number, the touchscreen will show an error message.
On	The machine will restrict all fax sending and outbound calls for that dialling method.
Off	The machine does not restrict the dialling method.

   - The [Enter # Twice] setting will not work if you use an external phone or press [Hook] before entering the number. You will not be asked to re-enter the number.
   - If you selected [On] or [Enter # Twice], you cannot use the Broadcasting feature.

4. Press .

MFC-J3930DW

1. Press [Settings] > [All Settings] > [Fax] > [Dial Restriction].
2. Press one of the following options:
   - [Dial Pad]
   - [Address Book]

   If you combine Address Book numbers when dialling, the address will be recognised as dial pad input and will not be restricted.

   - [Shortcuts]
3. Press one of the following options:

Option	Description
Enter # Twice	The machine will prompt you to re-enter the number. If you re-enter the same number correctly, the machine will start dialling. If you re-enter the wrong number, the touchscreen will show an error message.
On	The machine will restrict all fax sending and outbound calls for that dialling method.
Off	The machine does not restrict the dialling method.

- The [Enter # Twice] setting will not work if you use an external phone or press [Hook] before entering the number. You will not be asked to re-enter the number.
- If you selected [On] or [Enter # Twice], you cannot use the Broadcasting feature.

4. Press .

Related Information

- General Settings

Reduce Printing Noise

The Quiet Mode setting can reduce printing noise. When Quiet Mode is turned on, the print speed becomes slower.

The factory setting is [Off].

- When the Quiet Mode setting is turned on, appears on the Home screen.

>> MFC-J3530DW
>> MFC-J3930DW

MFC-J3530DW

1. Press [Settings] > [All Settings] > [General Setup] > [Quiet Mode].
2. Press [On] or [Off].
3. Press .

MFC-J3930DW

1. Press [Settings] > [All Settings] > [General Setup] > [Quiet Mode].
2. Press [On] or [Off].
3. Press .

Related Information

- General Settings
- Touchscreen LCD Overview
- Paper Handling and Printing Problems

Change the Language Displayed on the LCD

Change the LCD language if needed.

This feature is not available in some countries.

>> MFC-J3530DW
>> MFC-J3930DW

MFC-J3530DW

1. Press [Settings] > [All Settings] > [Initial Setup] > [Local Language].
2. Press your language.
3. Press .

MFC-J3930DW

1. Press [Settings] > [All Settings] > [Initial Setup] > [Local Language].
2. Press your language.
3. Press .

Related Information

- General Settings

Change the Keyboard Setting

Related Models: MFC-J3530DW

You can choose the type of keyboard for the LCD.

1. Press [Settings] > [All Settings] > [General Setup] > [Keyboard Settings].
2. Press [QWERTY] or [ABC].
3. Press .

Related Information

- General Settings

Save Your Favourite Settings as a Shortcut

- Add Shortcuts
- Change or Delete Shortcuts

Add Shortcuts

You can add the Fax, Copy, Scan, Web Connect and Apps settings you use most frequently by saving them as your Shortcuts. Later you can press the Shortcut to apply these settings instead of manually re-entering them.

Some Shortcut menus are not available depending on your model.

These instructions describe how to add a Copy Shortcut. The steps for adding a Fax, Scan, Web Connect or Apps Shortcut are very similar.

>> MFC-J3530DW
>> MFC-J3930DW

MFC-J3530DW

1. Press [+] [Shortcuts].
2. Press ◀ or ▶ to display the Shortcut screens.
3. Press + where you have not added a Shortcut.
4. Press ▲ or ▼ to display [Copy].
5. Press [Copy].
6. Press [Options].
7. Press ▲ or ▼ to display the available settings, and then press the setting you want to change.
8. Press ▲ or ▼ to display the available options for the setting, and then press the option you want.

   Repeat the previous and this steps until you have selected all the settings for this Shortcut. When finished, press [OK].
9. Press [Save as Shortcut].
10. Read and confirm the displayed list of settings you have selected, and then press [OK].
11. Enter a name for the Shortcut using the LCD, and then press [OK].

When adding Fax or Scan to Shortcuts, you will be asked if you want to make this a One Touch Shortcut. Follow the LCD instructions.

MFC-J3930DW

1. If the Home screen 1, screen 2, or screen 3 appears, press [+] [Shortcuts].
2. Press a tab from [1] to [3].
3. Press + where you have not added a Shortcut.
4. Press [Copy].
5. Press [Options].
6. Swipe up or down or press ▲ or ▼ to display the available settings, and then press the setting you want to change.
7. Swipe up or down or press ▲ or ▼ to display the available options for the setting, and then press the option you want.

   Repeat the previous and this steps until you have selected all the settings for this Shortcut. When finished, press [OK].
8. Press [Save as Shortcut].
9. Read and confirm the displayed list of settings you have selected, and then press [OK].
10. Enter a name for the Shortcut using the LCD, and then press [OK].

When adding Fax or Scan to Shortcuts, you will be asked if you want to make this a One Touch Shortcut. Follow the LCD instructions.

Related Information

- Save Your Favourite Settings as a Shortcut

Change or Delete Shortcuts

You can change the settings in a Shortcut.

You cannot change a Web Connect Shortcut or Apps Shortcut. If you need to change them, delete them, and then add a new Shortcut.

>> MFC-J3530DW
>> MFC-J3930DW

MFC-J3530DW

1. Press [+] [Shortcuts].
2. Press ◀ or ▶ to display the Shortcut you want to change.
3. Press and hold the Shortcut you want to change.
4. Press [Edit].

To delete the Shortcut, press [Delete]. To edit the name of the Shortcut, press [Rename] and follow the LCD menus.

5. Change the settings for the Shortcut you selected.
6. Press [Save as Shortcut] when you have finished changing the settings.
7. Press [OK] to confirm.

When changing Fax or Scan Shortcuts, you will be asked if you want to make this a One Touch Shortcut. Follow the LCD instructions.

MFC-J3930DW

1. If the Home screen 1, screen 2, or screen 3 appears, press [+] [Shortcuts].
2. Press a tab from [1] to [3] to display the Shortcut you want to change.
3. Press and hold the Shortcut you want to change.
4. Press [Edit].

To delete the Shortcut, press [Delete]. To edit the name of the Shortcut, press [Rename] and follow the LCD menus.

5. Change the settings for the Shortcut you selected.
6. Press [Save as Shortcut] when you have finished changing the settings.
7. Press [OK] to confirm.

When changing Fax or Scan Shortcuts, you will be asked if you want to make this a One Touch Shortcut. Follow the LCD instructions.

Related Information

- Save Your Favourite Settings as a Shortcut
- Enter Text on Your Brother Machine

Print Reports

- Reports
- Print a Report
- Fax Reports
- Telephone and Fax problems

Reports

The following reports are available:

Transmission Verify

The Transmission Verify prints a Transmission Verification Report for your last transmission.

Address Book

The Address Book report prints an alphabetical list of names and numbers stored in the Address Book memory.

Fax Journal

The Fax Journal prints a list of information about your last 200 incoming and outgoing faxes. (TX means Transmit, RX means Receive)

(Windows 7, Windows 8 and Windows 10)

You can view and print the Fax Journal report from your computer using the Fax Journal management software. Go to your model's **Downloads** page on the Brother Solutions Center at support.brother.com to download the software.

User Settings

The User Settings report prints a list of your current settings.

Network Configuration

The Network Configuration report prints a list of your current network settings.

WLAN Report

The WLAN Report prints the wireless LAN connectivity diagnosis.

Caller ID history

The Caller ID history report prints a list of the available Caller ID information for the last 30 received faxes and telephone calls.

Related Information

- Print Reports

Print a Report

>> MFC-J3530DW
>> MFC-J3930DW

MFC-J3530DW

1. Press [Settings] > [All Settings] > [Print Reports].
2. Press ▲ or ▼ to display the report options, and then press the option you want.
3. Press [Yes].
4. Press .

MFC-J3930DW

1. Press [Settings] > [All Settings] > [Print Reports].
2. Swipe up or down or press ▲ or ▼ to display the report options, and then press the option you want.
3. Press [Yes].
4. Press .

Related Information

- Print Reports
- Caller ID

Settings and Features Tables

- Settings Tables (2.7"(67.5 mm) Touchpanel models)
- Features Tables (2.7"(67.5 mm) Touchpanel models)
- Settings Tables (3.7"(93.4 mm) Touch Panel models)
- Features Tables (3.7"(93.4 mm) Touch Panel models)

Settings Tables (2.7"(67.5 mm) Touchpanel models)

Related Models: MFC-J3530DW

These tables will help you understand your machine's menu selections and options.

[Settings]

Level 1	Level 2	Level 3	Descriptions
(Date & Time)	Date	-	Add the date and time on the screen and in the headings of the faxes you send.
	Time	-	
	Time Zone	-	Set your time zone.
Maintenance	Improve Print Quality	-	Check and correct the print quality, alignment and paper feeding according to the LCD instructions.
	Print Head Cleaning	-	Clean the print head according to the LCD instructions.
	Remove Paper Scraps	-	Remove a piece of paper in the machine according to the LCD instructions.
	Ink Volume	-	Check the available ink volume.
	Ink Cartridge Model	-	Check your ink cartridge numbers.
	Print Setting Options	Reduce Smudging	Reduce smudging on the paper or paper jams during printing.
		Reduce Uneven Lines	Reduce uneven lines on the paper during printing.
		Slow Drying Paper	Use this setting when printing with a type of plain paper on which the ink dries very slowly.
Wi-Fi	TCP/IP	-	Set TCP/IP protocol.
	Setup Wizard	-	Configure your internal print server manually.
	WLAN Assistant	-	Configure your wireless network settings using the Brother CD-ROM.
	WPS	-	Configure your wireless network settings using the one-button push method.
	WPS w/ PIN Code	-	Configure your wireless network settings using WPS with a PIN.
	WLAN Status	-	View the current wireless network status.
	MAC Address	-	View the machine's MAC address.
Fax Preview	-	-	View received faxes on the LCD.
Tray Setting	Paper Type	-	Set the type of paper in the paper tray.
	Paper Size	-	Set the size of paper in the paper tray.
Receive Mode	-	-	Select the Receive Mode that best suits your needs.
All Settings	-	-	Configure the detailed settings.

[Settings] > [All Settings] > [General Setup]

Level 1	Level 2	Level 3	Descriptions
Maintenance	Improve Print Quality	-	Check and correct the print quality, alignment and paper feeding according to the LCD instructions.
	Print Head Cleaning	-	Clean the print head according to the LCD instructions.
	Remove Paper Scraps	-	Remove a piece of paper in the machine according to the LCD instructions.
	Ink Volume	-	Check the available ink volume.
	Ink Cartridge Model	-	Check your ink cartridge numbers.
	Print Setting Options	Reduce Smudging	Reduce smudging on the paper or paper jams during printing.
		Reduce Uneven Lines	Reduce uneven lines on the paper during printing.
		Slow Drying Paper	Use this setting when printing with a type of plain paper on which the ink dries very slowly.
Paper Type	-	-	Set the type of paper in the paper tray.
Paper Size	-	-	Set the size of paper in the paper tray.
Check Paper	-	-	Check the paper type and paper size when you pull the tray out of the machine.
Quiet Mode	-	-	Decrease printing noise.
Volume	Ring	-	Adjust the ring volume.
	Beep	-	Adjust the beeper volume.
	Speaker	-	Adjust the speaker volume.
LCD Settings	Backlight	-	Adjust the brightness of the LCD backlight.
	Dim Timer	-	Set how long the LCD backlight stays on after the last finger press.
Screen Settings	Scan Screen	-	Set the default Scan screen settings.
Notice Settings	Document Alert	-	Displays the alert when a document is left on the scanner glass.
	Copy Tip	-	Displays the document placement guidance when you open the document cover.
	Scan Result(Skip Blank Page)	-	Displays a scan result of skip blank page when finished.
Keyboard Settings	-	-	Select the type of keyboard for the LCD.
Sleep Mode	-	-	Select how long the machine must be idle before it goes into Sleep Mode.
Auto Power Off	-	-	Select how long the machine must wait before it automatically turns itself off after entering Sleep Mode. When set to Off, the machine will not power off automatically.

[Settings] > [All Settings] > [Shortcut Settings]

Level 1	Level 2	Descriptions
(Select shortcut button.)	Rename	Change the shortcut name.
	Edit	Change the shortcut settings.
	Delete	Delete the shortcut.

[Settings] > [All Settings] > [Fax]

Level 1	Level 2	Level 3	Descriptions
Setup Receive	Ring Delay	-	Set the number of rings before the machine answers in Fax Only or Fax/Tel mode.
	Receive Mode	-	Select the Receive Mode that best suits your needs.
	Fax Preview	-	View received faxes on the LCD.
	Fax Detect	-	Receive fax messages automatically when you answer a call and hear fax tones.
	Remote Codes	-	Answer calls at an extension or external telephone and use codes to turn the machine on or off. You can personalise the codes.
	Auto Reduction	-	Reduce the size of incoming faxes.
	PC Fax Receive	-	Set the machine to send faxes to your computer. You can turn on the Backup Print safety feature.
	Memory Receive	-	Set the machine to forward fax messages, to store incoming faxes in the memory (so you can retrieve them while you are away from your machine), or the cloud service. If you select Fax Forward, or Forward to Cloud, you can turn on the Backup Print safety feature.
	Fax Rx Stamp	-	Print the received time and date on the top of received faxes.
Report Setting	XMIT Report	-	Select the initial setup for the Transmission Verification Report.
	Journal Period	-	Set the interval for automatic printing of the Fax Journal. If you select an option other than Off and Every 50 Faxes, you can set the time for the option. If you select Every 7 Days, you can set the day of the week.
Print Document	-	-	Print received faxes stored in the machine's memory.
Remote Access	-	-	Set your own code for Remote Retrieval.
Dial Restriction	Dial Pad	-	Set the machine to restrict dialling when using the dial pad.
	Address Book	-	Set the machine to restrict the dialling when using the Address Book.
	Shortcuts	-	Set the machine to restrict the dialling when using a Shortcut.
Remaining Jobs	-	-	Check which scheduled jobs are in the machine's memory and cancel selected jobs.
Miscellaneous	Caller ID Type	-	Switch the mode if Caller ID cannot be displayed normally.
	Fax Mode	-	Select the transmission process when sending/receiving the faxes manually.

[Settings] > [All Settings] > [Network]

Level 1	Level 2	Level 3	Level 4	Descriptions
Wired LAN	TCP/IP	BOOT Method	-	Select the BOOT method that best suits your needs.
		IP Address	-	Enter the IP address.
		Subnet Mask	-	Enter the Subnet mask.
		Gateway	-	Enter the Gateway address.
		Node Name	-	Enter the Node name.
		WINS Configuration	-	Select the WINS configuration mode.
		WINS Server	-	Specify the IP address of the primary or secondary WINS server.
		DNS Server	-	Specify the IP address of the primary or secondary DNS server.
		APIPA	-	Set the machine to allocate the IP address from the link-local address range automatically.
		IPv6	-	Turn the IPv6 protocol on or off. To use the IPv6 protocol, go to the Brother Solutions Center at support.brother.com for more information.
	Ethernet	-	-	Select the Ethernet link mode.
	Wired Status	-	-	View the current wired status.
	MAC Address	-	-	View the machine's MAC address.
WLAN	TCP/IP	BOOT Method	-	Select the BOOT method that best suits your needs.
		IP Address	-	Enter the IP address.
		Subnet Mask	-	Enter the Subnet mask.
		Gateway	-	Enter the Gateway address.
		Node Name	-	Enter the Node name.
		WINS Configuration	-	Select the WINS configuration mode.
		WINS Server	-	Specify the IP address of the primary or secondary WINS server.
		DNS Server	-	Specify the IP address of the primary or secondary DNS server.
		APIPA	-	Set the machine to allocate the IP address from the link-local address range automatically.
		IPv6	-	Turn the IPv6 protocol on or off for a wireless LAN. To use the IPv6 protocol, go to the Brother Solutions Center at support.brother.com for more information.

Level 1	Level 2	Level 3	Level 4	Descriptions
WLAN	Setup Wizard	-	-	Configure your internal print server manually.
	WLAN Assistant	-	-	Configure your wireless network settings using the Brother CD-ROM.
	WPS	-	-	Configure your wireless network settings using the one-button push method.
	WPS w/ PIN Code	-	-	Configure your wireless network settings using WPS with a PIN.
	WLAN Status	Status	-	View the current wireless network status.
		Signal	-	View the current wireless network signal strength.
		SSID	-	View the current SSID.
		Comm. Mode	-	View the current Communication Mode.
	MAC Address	-	-	View the machine's MAC address.
Wi-Fi Direct	Push Button	-	-	Configure your Wi-Fi Direct network settings using the one-button push method.
	PIN Code	-	-	Configure your Wi-Fi Direct network settings using WPS with a PIN code.
	Manual	-	-	Configure your Wi-Fi Direct network settings manually.
	Group Owner	-	-	Set your machine as the Group Owner.
	Device Information	Device Name	-	View your machine's device name.
		SSID	-	View the Group Owner's SSID. When the machine is not connected, the LCD displays Not Connected.
		IP Address	-	View your machine's current IP Address.
	Status Information	Status	-	View the current Wi-Fi Direct network status.
		Signal	-	View the current Wi-Fi Direct network signal strength. When your machine acts as Group Owner, the LCD always indicates a strong signal.
	I/F Enable	-	-	Turn the Wi-Fi Direct connection on or off.
E-mail/IFAX (Available after Internet Fax (I-Fax) is downloaded.)	Mail Address	-	-	Enter the email address. (Up to 60 characters)
	Setup Server	SMTP	Server	Enter the SMTP server name and address.
			Port	Enter the SMTP port number.

Level 1	Level 2	Level 3	Level 4	Descriptions
E-mail/IFAX (Available after Internet Fax (I-Fax) is downloaded.)	Setup Server	SMTP	Auth. for SMTP	Select the Security method for email notification.
			SSL/TLS	Send or receive an email via an email server that requires secure SSL/TLS communication.
			Verify Certification	Verify the SMTP Server Certificate automatically.
		POP3/IMAP4	Protocol	Select the protocol for receiving an email from the server.
			Server	Enter the server name and address.
			Port	Enter the port number.
			Mailbox Name	Enter the mailbox name. (Up to 60 characters)
			Mailbox Password	Enter the password to login to the server. (Up to 32 characters)
			Select Folder	Select the specified folder in the mailbox using the IMAP4 protocol.
			SSL/TLS	Send or receive an E-mail via an E-mail server that requires secure SSL/TLS communication.
			Verify Certification	Verify the Server Certificate automatically.
			APOP	Turn APOP on or off.
	Setup Mail RX	Auto Polling	Auto Polling	Automatically check the server for new messages.
			Poll Frequency	Set the interval for checking new messages on the server.
		Header	-	Select the contents of the email header to be printed.
		Del/Read Error Mail	-	Set the machine to automatically delete error mails.
		Notification	-	Receive notification messages.
	Setup Mail TX	Sender Subject	-	View the subject.
		Size Limit	Size Limit	Limit the size of email documents.
			Maximum Size(MB)	
		Notification	-	Send notification messages.
	Setup Relay	Relay Broadcast	-	Relay a document to another fax machine.
		Relay Domain	-	Register the Domain name.
		Relay Report	-	Print the relay Broadcast Report.
	Manual Receive	-	-	Manually check the POP3 or IMAP4 server for new messages.

Level 1	Level 2	Level 3	Level 4	Descriptions
Message from Brother	Message from Brother	-	-	Display messages and notifications from Brother.
	Status	-	-	
Web Connect Settings	Proxy Settings	Proxy Connection	-	Change the Web connection settings.
		Address	-	
		Port	-	
		User Name	-	
		Password	-	
Network I/F	-	-	-	Select the network connection type.
Network Reset	-	-	-	Restore all network settings back to the factory settings.

[Settings] > [All Settings] > [Print Reports]

Level 1	Descriptions
XMIT Verify	Print a Transmission Verification Report for your last transmission.
Address Book	Print a list of names and numbers stored in the Address Book.
Fax Journal	Print a list of information about your last 200 incoming and outgoing faxes. (TX means Transmit. RX means Receive.)
User Settings	Print a list of your settings.
Network Configuration	Print a list of your Network settings.
WLAN Report	Print the wireless LAN connection results.
Caller ID History	Print a list of the available Caller ID information about the last 30 received faxes and telephone calls.

[Settings] > [All Settings] > [Machine Info.]

Level 1	Level 2	Descriptions
Serial No.	-	Check your machine's serial number.
Firmware Version	Main Version	Check your machine's firmware version.
Firmware Update	-	Update your machine to the latest firmware.
Firmware Auto Check	-	View firmware information on the Home screen.

[Settings] > [All Settings] > [Initial Setup]

Level 1	Level 2	Descriptions
Date & Time	Date	Add the date and time on the screen and in the headings of the faxes you send.
	Time	
	Time Zone	Set your time zone.
Station ID	Fax	Enter your name and fax number so it appears on each page you fax.
	Name	
Tone/Pulse (Available only for some countries.)	-	Select the dialling mode.

Level 1	Level 2	Descriptions
Fax Auto Redial	-	Set the machine to redial the last fax number if the fax did not go through because the line was busy.
Dial Tone	-	Shorten the dial tone detect pause.
Dial Prefix	-	Set a prefix number to always be added before the fax number every time you dial.
Compatibility	-	Adjust the equalisation for transmission difficulties. VoIP service providers offer fax support using various standards. If you regularly experience fax transmission errors, select Basic (for VoIP).
Reset	**Machine Reset**	Restore all the machine's settings that you have changed, such as Date and Time and Ring Delay.
	Network	Restore all network settings back to the factory settings.
	Address Book & Fax	Erase all stored phone numbers and fax settings.
	All Settings	Restore all the machine's settings back to the factory settings.
Local Language (Available only for some countries.)	-	Change your LCD language.

Related Information

- Settings and Features Tables

Features Tables (2.7"(67.5 mm) Touchpanel models)

Related Models: MFC-J3530DW

[Fax] (When [Fax Preview] is [Off])

Level 1	Level 2	Level 3	Descriptions
Redial(Pause)	-	-	Redial the last number called. When you are entering a fax or telephone number on the Touchpanel, Redial changes to Pause on the LCD. Press Pause when you need a delay while dialling numbers, such as access codes and credit card numbers. You can also store a pause when you set up addresses.
Address Book	(Search:)	-	Search within the Address Book.
	Edit	-	Store Address Book numbers, set up Group numbers for Broadcasting, and change and delete Address Book numbers.
	-	Apply	Start sending a fax using the Address Book.
Call History	Redial	-	Redial the last number you dialled.
	Outgoing Call	Apply	Select a number from the Outgoing Call history and then send a fax to it, add it to the Address Book, or delete it.
		Edit	
	Caller ID History	Apply	Select a number from the Caller ID history and then send a fax to it, add it to the Address Book, or delete it.
		Edit	
Options	Fax Resolution	-	Set the resolution for outgoing faxes.
	Contrast	-	Adjust the contrast.
	Document Size	-	Set the document size for outgoing faxes.
	Scan Long Paper	-	Scan a long document using the ADF.
	Broadcasting	Add Number	Send the same fax message to more than one fax number.
	Preview	-	Preview a fax message before you send it.
	Colour Setting	-	Set whether faxes are sent in monochrome or colour.
	Delayed Fax	Delayed Fax	Set the time of day the delayed faxes will be sent.
		Set Time	
	Batch TX	-	Combine delayed faxes to the same fax number at the same time of day into one transmission.
	Real Time TX	-	Send a fax without using the memory.
	Overseas Mode	-	Set to On if you have difficulty sending faxes overseas.
	Call History	Redial	Redial the last number you dialled.
		Outgoing Call	Select a number from the Outgoing Call history and then send a fax to it, add it to the Address Book, or delete it.

Level 1	Level 2	Level 3	Descriptions
Options	Call History	Caller ID History	Select a number from the Caller ID history and then send a fax to it, add it to the Address Book, or delete it.
	Address Book	(Search:)	Search within the Address Book.
		Edit	Store Address Book numbers, set up Group numbers for Broadcasting, and change and delete Address Book numbers.
	Set New Default	-	Save your settings as the default.
	Factory Reset	-	Restore all settings back to the factory settings.
Save as Shortcut	-	-	Save the current settings as a shortcut.

[Fax] (When [Fax Preview] is [On])

Level 1	Level 2	Level 3	Level 4	Descriptions
Sending Faxes	Redial(Pause)	-	-	Redial the last number called. When you are entering a fax or telephone number on the Touchpanel, Redial changes to Pause on the LCD. Press Pause when you need a delay while dialling numbers, such as access codes and credit card numbers. You can also store a pause when you set up addresses.
	Address Book	(Search:)	-	Search within the Address Book.
		Edit	-	Store Address Book numbers, set up Group numbers for Broadcasting, and change and delete Address Book numbers.
		-	Apply	Start sending a fax using the Address Book.
	Call History	Redial	-	Redial the last number you dialled.
		Outgoing Call	Apply	Select a number from the Outgoing Call history and then send a fax to it, add it to the Address Book, or delete it.
			Edit	
		Caller ID History	Apply	Select a number from the Caller ID history and then send a fax to it, add it to the Address Book, or delete it.
			Edit	
	Options	Fax Resolution	-	Set the resolution for outgoing faxes.
		Contrast	-	Adjust the contrast.
		Document Size	-	Set the document size for outgoing faxes.
		Scan Long Paper	-	Scan a long document using the ADF.
		Broadcasting	Add Number	Send the same fax message to more than one fax number.
		Preview	-	Preview a fax message before you send it.
		Colour Setting	-	Set whether faxes are sent in monochrome or colour.

Level 1	Level 2	Level 3	Level 4	Descriptions
Sending Faxes	Options	Delayed Fax	Delayed Fax	Set the time of day the delayed faxes will be sent.
			Set Time	
		Batch TX	-	Combine delayed faxes to the same fax number at the same time of day into one transmission.
		Real Time TX	-	Send a fax without using the memory.
		Overseas Mode	-	Set to On if you have difficulty sending faxes overseas.
		Call History	Redial	Redial the last number you dialled.
			Outgoing Call	Select a number from the Outgoing Call history and then send a fax to it, add it to the Address Book, or delete it.
			Caller ID History	Select a number from the Caller ID history and then send a fax to it, add it to the Address Book, or delete it.
		Address Book	(Search:)	Search within the Address Book.
			Edit	Store Address Book numbers, set up Group numbers for Broadcasting, and change and delete Address Book numbers.
		Set New Default	-	Save your settings as the default.
		Factory Reset	-	Restore all settings back to the factory settings.
	Save as Shortcut	-	-	Save the current settings as a shortcut.
Received Faxes	Print/Delete	Print All(New Faxes)	-	Print the new received faxes.
		Print All(Old Faxes)	-	Print the old received faxes.
		Delete All(New Faxes)	-	Delete the new received faxes.
		Delete All(Old Faxes)	-	Delete the old received faxes.
Address Book	(Search:)	-	-	Search within the Address Book.
	Edit	-	-	Store Address Book numbers, set up Group numbers for Broadcasting, and change and delete Address Book numbers.
	-	Apply	-	Start sending a fax using the Address Book.
Call History	Redial	-	-	Redial the last number you dialled.
	Outgoing Call	Apply	-	Select a number from the Outgoing Call history and then send a fax to it, add it to the Address Book, or delete it.
		Edit	-	

Level 1	Level 2	Level 3	Level 4	Descriptions
Call History	Caller ID History	Apply	-	Select a number from the Caller ID history and then send a fax to it, add it to the Address Book, or delete it.
		Edit	-	

[Copy]

Level 1	Level 2	Level 3	Descriptions
Save as Shortcut	-	-	Save the current settings as a shortcut.
Options	Quality	-	Select the Copy resolution for your document type.
	Paper Type	-	Select the paper type that matches the paper in the tray.
	Paper Size	-	Select the paper size that matches the paper in the tray.
	Enlarge/Reduce	100%	-
		Enlarge	Select an enlargement ratio for the next copy.
		Reduce	Select a reduction ratio for the next copy.
		Fit to Page	Adjust the copy size to fit on the paper size you have set.
		Custom(25-400%)	Enter an enlargement or reduction ratio.
	Density	-	Adjust the density.
	Stack/Sort	-	Select to stack or sort multiple copies.
	Page Layout	-	Make N in 1, 2 in 1 ID, 1 to 2, or Poster copies.
	Layout Format (When you set A3 or Ledger, and then choose 2 in 1 or Poster 2x2)		
	Auto Deskew	-	Set the machine to correct a skewed copy.
	2-sided Copy	-	Turn off or turn on 2-sided copying and select flip on long edge or flip on short edge.
	Advanced Settings	-	Select advanced copy settings.
	Set New Default	-	Save your settings as the default.
	Factory Reset	-	Restore all settings back to the factory settings.

[Scan]

Level 1	Level 2	Level 3	Level 4	Descriptions
to Media (When a USB Flash drive is inserted)	Other Scan to Actions	-	-	Scan documents and save them directly to a USB flash drive without using a computer.
	Options	-	-	
	Save as Shortcut	-	-	
to PC	to File	Other Scan to Actions	-	Scan documents and save them to a folder on your computer.
		(Select USB or PC)	Options	
			Save as Shortcut	

Level 1	Level 2	Level 3	Level 4	Descriptions
to PC	to OCR	Other Scan to Actions	-	Convert your scanned document to an editable text file.
		(Select USB or PC)	Options	
			Save as Shortcut	
	to Image	Other Scan to Actions	-	Scan photos or graphics into your graphics applications.
		(Select USB or PC)	Options	
			Save as Shortcut	
	to E-mail	Other Scan to Actions	-	Send a scanned document as an email attachment.
		(Select USB or PC)	Options	
			Save as Shortcut	
to E-mail Server (Available after Internet Fax (I-Fax) is downloaded.)	Other Scan to Actions	-	-	Send scanned data to an email server by allowing your machine to communicate with your network and mail server.
	Address Book	Next	Destinations	
	Manual		Save as Shortcut	
			Options	
to FTP	Other Scan to Actions	-	-	Scan documents directly to an FTP server.
	(Select Profile name)	Options	-	
		Save as Shortcut	-	
to Network	Other Scan to Actions	-	-	Scan documents directly to a CIFS server on your local network.
	(Select Profile name)	Options	-	
		Save as Shortcut	-	
to Web	-	-	-	Upload the scanned data to an Internet service.
WS Scan (Appears when you install a Web Services Scanner, which is displayed in your computer's Network explorer.)	Other Scan to Actions	-	-	Scan data using the Web Service protocol.
	Scan	-	-	
	Scan for E-mail	-	-	
	Scan for Fax	-	-	
	Scan for Print	-	-	

[Web]

Level 1	Descriptions
Web	Connect the Brother machine to an Internet service.

[Apps]

Level 1	Descriptions
Apps	Connect the Brother machine to the Brother Apps service.

[USB]

Level 1	Level 2	Level 3	Level 4	Descriptions
JPEG Print	Select Files	OK	Print Settings	Adjust your photos with the options.
		Print All	-	Print all photos in your USB flash drive.
	Index Print	Print Index Sheet	Print Settings	Print a thumbnail page.
		Print Photos	Print Settings	Print photos by choosing the index numbers.
Scan to Media	-	-	-	Scan documents into a USB flash drive.
Web	-	-	-	Connect the Brother machine to an Internet service.

[A3 Copy Shortcuts]

Level 1	Level 2	Level 3	Descriptions
A3 2in1 A3 A4 ⇒ A3 A3 ⇒ A4 A4 + Note(L) A4 + Note(P) A4 + Grid A4 + Blank A4 Center	Options	Quality	Select the Copy resolution for your document type.
		Paper Type	View the available paper type.
		Paper Size	Set the size of paper in the paper tray.
		Density	Adjust the density.
		Auto Deskew	Set the machine to correct a skewed copy.

[2 in 1 ID Copy]

Level 1	Descriptions
2 in 1 ID Copy	Copy both sides of an identification card onto one page.

[Download Software]

Level 1	Descriptions
Download Software	Displays information about downloading and installing software for mobile devices and computers.

[Shortcuts]

Level 1	Level 2	Level 3	Descriptions
Add Shortcut	Copy	-	Change the settings in the Copy Options.
	Fax	-	Change the settings in the Fax Options.

Level 1	Level 2	Level 3	Descriptions
Add Shortcut	Scan	to PC(File)	Scan documents and save them to a folder on your computer.
		to PC(OCR)	Convert your scanned document to an editable text file.
		to PC(Image)	Scan photos or graphics into your graphics applications.
		to PC(E-mail)	Send a scanned document as an email attachment.
		to Media	Scan documents and save them directly to a USB flash drive without using a computer.
		to E-mail Server (Available after Internet Fax (I-Fax) is downloaded.)	Scan a monochrome or a colour document to your email server.
		to Network	Send scanned data to a CIFS server on your local network or on the Internet.
		to FTP	Send scanned data via FTP.
	Web	-	Connect the Brother machine to an Internet service.
	Apps	-	Connect the Brother machine to the Brother Apps service.
This list appears when each Shortcut icon is pressed for 2 seconds.	Rename	-	Change the shortcut name.
	Edit	-	Change the shortcut settings.
	Delete	-	Delete the shortcut.
Edit/Delete	(Select shortcut button.)	Rename	Change the shortcut name.
		Edit	Change the shortcut settings.
		Delete	Delete the shortcut.

[Ink]

Level 1	Level 2	Descriptions
Ink Volume	-	Check the available ink volume.
Ink Cartridge Model	-	Check your ink cartridge numbers.
Improve Print Quality	-	Check and correct the print quality, alignment and paper feeding according to the LCD instructions.
Print Head Cleaning	-	Clean the print head according to the LCD instructions.
Remove Paper Scraps	-	Remove a piece of paper in the machine according to the LCD instructions.
Print Setting Options	Reduce Smudging	Reduce smudging on the paper or paper jams during printing.
	Reduce Uneven Lines	Reduce uneven lines on the paper during printing.
	Slow Drying Paper	Use this setting when printing with a type of plain paper on which the ink dries very slowly.

(Wi-Fi Setup)

Level 1	Descriptions
Setup Wizard	Configure your internal print server manually.
WLAN Assistant	Configure your wireless network settings using the Brother CD-ROM.
WPS	Configure your wireless network settings using the one-button push method.

When you have put a USB Flash drive in the USB slot

Level 1	Descriptions
JPEG Print	Select photo menu.
Scan to Media	Scan documents into a USB flash drive.
Web	Connect the Brother machine to an Internet service.

Related Information

- Settings and Features Tables

Settings Tables (3.7"(93.4 mm) Touch Panel models)

Related Models: MFC-J3930DW

The Settings tables will help you understand the menu selections and options found in the machine's programs.

[Settings]

Level 1	Level 2	Level 3	Descriptions
(Date & Time)	Date	-	Add the date and time on the screen and in the headings of the faxes you send.
	Time	-	
	Time Zone	-	Set your time zone.
Maintenance	Improve Print Quality	-	Check and correct the print quality, alignment and paper feeding according to the LCD instructions.
	Print Head Cleaning	-	Clean the print head according to the LCD instructions.
	Remove Paper Scraps	-	Remove a piece of paper in the machine according to the LCD instructions.
	Ink Volume	-	Check the available ink volume.
	Ink Cartridge Model	-	Check your ink cartridge numbers.
	Print Setting Options	Reduce Smudging	Reduce smudging on the paper or paper jams during printing.
		Reduce Uneven Lines	Reduce uneven lines on the paper during printing.
		Slow Drying Paper	Use this setting when printing with a type of plain paper on which the ink dries very slowly.
Wi-Fi	TCP/IP	-	Set TCP/IP protocol.
	Setup Wizard	-	Configure your internal print server manually.
	WLAN Assistant	-	Configure your wireless network settings using the Brother CD-ROM.
	WPS	-	Configure your wireless network settings using the one-button push method.
	WPS w/ PIN Code	-	Configure your wireless network settings using WPS with a PIN.
	WLAN Status	-	View the current wireless network status.
	MAC Address	-	View the machine's MAC address.
Receive Mode	-	-	Select the Receive Mode that best suits your needs.
Tray Setting	Tray #1	Paper Type	Set the type of paper in paper tray #1.
		Paper Size	Set the size of paper in paper tray #1.
	Tray #2	Paper Size	Set the size of paper in paper tray #2.
	MP Tray	Paper Type	Set the type of paper in the MP tray.
		Paper Size	Set the size of paper in the MP tray.
Fax Preview	-	-	View received faxes on the LCD.
All Settings	-	-	Configure the detailed settings.

[Settings] > [All Settings] > [General Setup]

Level 1	Level 2	Level 3	Descriptions
Maintenance	Improve Print Quality	-	Check and correct the print quality, alignment and paper feeding according to the LCD instructions.
	Print Head Cleaning	-	Clean the print head according to the LCD instructions.
	Remove Paper Scraps	-	Remove a piece of paper in the machine according to the LCD instructions.
	Ink Volume	-	Check the available ink volume.
	Ink Cartridge Model	-	Check your ink cartridge numbers.
	Print Setting Options	Reduce Smudging	Reduce smudging on the paper or paper jams during printing.
		Reduce Uneven Lines	Reduce uneven lines on the paper during printing.
		Slow Drying Paper	Use this setting when printing with a type of plain paper on which the ink dries very slowly.
Tray Setting	Tray #1	Paper Type	Set the type of paper in paper tray #1.
		Paper Size	Set the size of paper in paper tray #1.
	Tray #2	Paper Size	Set the size of paper in paper tray #2.
	MP Tray	Paper Type	Set the type of paper in the MP tray.
		Paper Size	Set the size of paper in the MP tray.
	Tray Setting: Copy	Tray Use	Select the tray to be used for copying.
		Tray Priority	Change the tray priority for copying.
	Tray Setting: Fax	Tray Use	Select the tray to be used for faxing.
		Tray Priority	Change the tray priority for faxing.
	Tray Setting: Print	Tray Priority	Change the tray priority for printing from your computer.
	Tray Setting: JPEG Print (Media)	Tray Use	Select the tray to be used for printing photos from a USB flash drive.
		Tray Priority	Change the tray priority for printing photos from a USB flash drive.
	Check Paper	-	Check the paper type and paper size when you pull the tray out of the machine or set the paper in MP tray.
Quiet Mode	-	-	Decrease printing noise.
Volume	Ring	-	Adjust the ring volume.
	Beep	-	Adjust the beeper volume.
	Speaker	-	Adjust the speaker volume.
LCD Settings	Backlight	-	Adjust the brightness of the LCD backlight.
	Dim Timer	-	Set how long the LCD backlight stays on after the last finger press.
Screen Settings	Home Screen	-	Set the screen that is displayed when you press (Home).
	Copy Screen	-	Set the default Copy screen settings.

Level 1	Level 2	Level 3	Descriptions
Screen Settings	Scan Screen	-	Set the default Scan screen settings.
Notice Settings	Document Alert	-	Displays the alert when a document is left on the scanner glass.
	Copy Tip	-	Displays the document placement guidance when you open the document cover.
	Scan Result(Skip Blank Page)	-	Displays a scan result of skip blank page when finished.
Sleep Mode	-	-	Select how long the machine must be idle before it goes into Sleep Mode.
Auto Power Off	-	-	Select how long the machine must wait before it automatically turns itself off after entering Sleep Mode. When set to Off, the machine will not power off automatically.

[Settings] > [All Settings] > [Shortcut Settings]

Level 1	Level 2	Descriptions
(Select shortcut button.)	Rename	Change the shortcut name.
	Edit	Change the shortcut settings.
	Delete	Delete the shortcut.

[Settings] > [All Settings] > [Fax]

Level 1	Level 2	Level 3	Descriptions
Setup Receive	Ring Delay	-	Set the number of rings before the machine answers in Fax Auto or Fax/Tel mode.
	Receive Mode	-	Select the Receive Mode that best suits your needs.
	Fax Preview	-	View received faxes on the LCD.
	Fax Detect	-	Receive fax messages automatically when you answer a call and hear fax tones.
	Remote Codes	-	Answer calls at an extension or external telephone and use codes to turn the machine on or off. You can personalise the codes.
	Auto Reduction	-	Reduce the size of incoming faxes.
	PC Fax Receive	-	Set the machine to send faxes to your computer. You can turn on the Backup Print safety feature.
	Memory Receive	-	Set the machine to forward fax messages, to store incoming faxes in the memory (so you can retrieve them while you are away from your machine), or the cloud service. If you select Fax Forward, or Forward to Cloud, you can turn on the Backup Print safety feature.
	Fax Rx Stamp	-	Print the received time and date on the top of received faxes.
Report Setting	XMIT Report	-	Select the initial setup for the Transmission Verification Report.
	Journal Period	-	Set the interval for automatic printing of the Fax Journal. If you select an option other than Off and Every 50 Faxes, you can set the time for the option. If you select Every 7 Days, you can set the day of the week.

Level 1	Level 2	Level 3	Descriptions
Print Document	-	-	Print received faxes stored in the machine's memory.
Remote Access	-	-	Set your own code for Remote Retrieval.
Dial Restriction	Dial Pad	-	Set the machine to restrict dialling when using the dial pad.
	Address Book	-	Set the machine to restrict the dialling when using the Address Book.
	Shortcuts	-	Set the machine to restrict the dialling when using a Shortcut.
Remaining Jobs	-	-	Check which scheduled jobs are in the machine's memory and cancel selected jobs.
Miscellaneous	Caller ID Type	-	Switch the mode if Caller ID cannot be displayed normally.
	Fax Mode	-	Select the transmission process when sending/receiving the faxes manually.

[Settings] > [All Settings] > [Network]

Level 1	Level 2	Level 3	Level 4	Descriptions
Wired LAN	TCP/IP	BOOT Method	-	Select the BOOT method that best suits your needs.
		IP Address	-	Enter the IP address.
		Subnet Mask	-	Enter the Subnet mask.
		Gateway	-	Enter the Gateway address.
		Node Name	-	Enter the Node name.
		WINS Configuration	-	Select the WINS configuration mode.
		WINS Server	-	Specify the IP address of the primary or secondary WINS server.
		DNS Server	-	Specify the IP address of the primary or secondary DNS server.
		APIPA	-	Set the machine to allocate the IP address from the link-local address range automatically.
		IPv6	-	Turn the IPv6 protocol on or off. To use the IPv6 protocol, go to the Brother Solutions Center at support.brother.com for more information.
	Ethernet	-	-	Select the Ethernet link mode.
	Wired Status	-	-	View the current wired status.
	MAC Address	-	-	View the machine's MAC address.
WLAN	TCP/IP	BOOT Method	-	Select the BOOT method that best suits your needs.
		IP Address	-	Enter the IP address.
		Subnet Mask	-	Enter the Subnet mask.
		Gateway	-	Enter the Gateway address.
		Node Name	-	Enter the Node name.

Level 1	Level 2	Level 3	Level 4	Descriptions
WLAN	TCP/IP	WINS Configuration	-	Select the WINS configuration mode.
		WINS Server	-	Specify the IP address of the primary or secondary WINS server.
		DNS Server	-	Specify the IP address of the primary or secondary DNS server.
		APIPA	-	Set the machine to allocate the IP address from the link-local address range automatically.
		IPv6	-	Turn the IPv6 protocol on or off for a wireless LAN. To use the IPv6 protocol, go to the Brother Solutions Center at support.brother.com for more information.
	Setup Wizard	-	-	Configure your internal print server manually.
	WLAN Assistant	-	-	Configure your wireless network settings using the Brother CD-ROM.
	WPS	-	-	Configure your wireless network settings using the one-button push method.
	WPS w/ PIN Code	-	-	Configure your wireless network settings using WPS with a PIN.
	WLAN Status	Status	-	View the current wireless network status.
		Signal	-	View the current wireless network signal strength.
		SSID	-	View the current SSID.
		Comm. Mode	-	View the current Communication Mode.
	MAC Address	-	-	View the machine's MAC address.
Wi-Fi Direct	Push Button	-	-	Configure your Wi-Fi Direct network settings using the one-button push method.
	PIN Code	-	-	Configure your Wi-Fi Direct network settings using WPS with a PIN code.
	Manual	-	-	Configure your Wi-Fi Direct network settings manually.
	Group Owner	-	-	Set your machine as the Group Owner.
	Device Information	Device Name	-	View your machine's device name.
		SSID	-	View the Group Owner's SSID. When the machine is not connected, the LCD displays Not Connected.

Level 1	Level 2	Level 3	Level 4	Descriptions
Wi-Fi Direct	Device Information	IP Address	-	View your machine's current IP Address.
	Status Information	Status	-	View the current Wi-Fi Direct network status.
		Signal	-	View the current Wi-Fi Direct network signal strength. When your machine acts as Group Owner, the LCD always indicates a strong signal.
	I/F Enable	-	-	Turn the Wi-Fi Direct connection on or off.
NFC	-	-	-	Turn the NFC function on or off.
E-mail/IFAX (Available after Internet Fax (I-Fax) is downloaded.)	Mail Address	-	-	Enter the email address. (Up to 60 characters)
	Setup Server	SMTP	Server	Enter the SMTP server name and address.
			Port	Enter the SMTP port number.
			Auth. for SMTP	Select the Security method for email notification.
			SSL/TLS	Send or receive an email via an email server that requires secure SSL/TLS communication.
			Verify Certification	Verify the SMTP Server Certificate automatically.
		POP3/IMAP4	Protocol	Select the protocol for receiving an email from the server.
			Server	Enter the server name and address.
			Port	Enter the port number.
			Mailbox Name	Enter the mailbox name. (Up to 60 characters)
			Mailbox Password	Enter the password to login to the server. (Up to 32 characters)
			Select Folder	Select the specified folder in the mailbox using the IMAP4 protocol.
			SSL/TLS	Send or receive an E-mail via an E-mail server that requires secure SSL/TLS communication.
			Verify Certification	Verify the Server Certificate automatically.
			APOP	Turn APOP on or off.
	Setup Mail RX	Auto Polling	Auto Polling	Automatically check the server for new messages.
			Poll Frequency	Set the interval for checking for new messages on the server.
		Header	-	Select the contents of the email header to be printed.

Level 1	Level 2	Level 3	Level 4	Descriptions
E-mail/IFAX (Available after Internet Fax (I-Fax) is downloaded.)	Setup Mail RX	Del/Read Error Mail	-	Set the machine to automatically delete error mails.
		Notification	-	Receive notification messages.
	Setup Mail TX	Sender Subject	-	View the subject.
		Size Limit	Size Limit	Limit the size of email documents.
			Maximum Size(MB)	
		Notification	-	Send notification messages.
	Setup Relay	Relay Broadcast	-	Relay a document to another fax machine.
		Relay Domain	-	Register the Domain name.
		Relay Report	-	Print the relay Broadcast Report.
	Manual Receive	-	-	Manually check the POP3 or IMAP4 server for new messages.
Message from Brother	Message from Brother	-	-	Display messages and notifications from Brother.
	Status	-	-	
Web Connect Settings	Proxy Settings	Proxy Connection	-	Change the Web connection settings.
		Address	-	
		Port	-	
		User Name	-	
		Password	-	
Network I/F	-	-	-	Select the network connection type.
Network Reset	-	-	-	Restore all network settings back to the factory settings.

[Settings] > [All Settings] > [Print Reports]

Level 1	Descriptions
XMIT Verify	Print a Transmission Verification Report for your last transmission.
Address Book	Print a list of names and numbers stored in the Address Book.
Fax Journal	Print a list of information about your last 200 incoming and outgoing faxes. (TX means Transmit. RX means Receive.)
User Settings	Print a list of your settings.
Network Configuration	Print a list of your Network settings.
WLAN Report	Print the wireless LAN connection results.
Caller ID History	Print a list of the available Caller ID information about the last 30 received faxes and telephone calls.

[Settings] > [All Settings] > [Machine Info.]

Level 1	Level 2	Descriptions
Serial No.	-	Check your machine's serial number.

Level 1	Level 2	Descriptions
Firmware Version	Main Version	Check your machine's firmware version.
Firmware Update	-	Update your machine to the latest firmware.
Firmware Auto Check	-	View firmware information on the Home screen.

[Settings] > [All Settings] > [Initial Setup]

Level 1	Level 2	Descriptions
Date & Time	Date	Add the date and time on the screen and in the headings of the faxes you send.
	Time	
	Time Zone	Set your time zone.
Station ID	Fax	Enter your name and fax number so it appears on each page you fax.
	Name	
Tone/Pulse (Available only for some countries.)	-	Select the dialling mode.
Fax Auto Redial	-	Set the machine to redial the last fax number if the fax did not go through because the line was busy.
Dial Tone	-	Shorten the dial tone detect pause.
Dial Prefix	-	Set a prefix number to always be added before the fax number every time you dial.
Compatibility	-	Adjust the equalisation for transmission difficulties. VoIP service providers offer fax support using various standards. If you regularly experience fax transmission errors, select Basic (for VoIP).
Reset	Machine Reset	Restore all the machine's settings that you have changed, such as Date and Time and Ring Delay.
	Network	Restore all network settings back to the factory settings.
	Address Book & Fax	Erase all stored phone numbers and fax settings.
	All Settings	Restore all the machine's settings back to the factory settings.
Local Language (Available only for some countries.)	-	Change your LCD language.

Related Information

- Settings and Features Tables

Features Tables (3.7"(93.4 mm) Touch Panel models)

Related Models: MFC-J3930DW

[Fax] (When [Fax Preview] is [Off])

Level 1	Level 2	Level 3	Descriptions
Address Book	(Search:)	-	Search within the Address Book.
	Edit	-	Store Address Book numbers, set up Group numbers for Broadcasting, and change and delete Address Book numbers.
	-	Apply	Start sending a fax using the Address Book.
Call History	Redial	-	Redial the last number you dialled.
	Outgoing Call	Apply	Select a number from the Outgoing Call history and then send a fax to it, add it to the Address Book, or delete it.
		Edit	
	Caller ID History	Apply	Select a number from the Caller ID history and then send a fax to it, add it to the Address Book, or delete it.
		Edit	
Options	Fax Resolution	-	Set the resolution for outgoing faxes.
	2-sided Fax	-	Set the 2-sided scanning format.
	Contrast	-	Adjust the contrast.
	Document Size	-	Set the document size for outgoing faxes.
	Scan Long Paper	-	Scan a long document using the ADF.
	Broadcasting	Add Number	Send the same fax message to more than one fax number.
	Preview	-	Preview a fax message before you send it.
	Colour Setting	-	Set whether faxes are sent in monochrome or colour.
	Delayed Fax	Delayed Fax	Set the time of day the delayed faxes will be sent.
		Set Time	
	Batch TX	-	Combine delayed faxes to the same fax number at the same time of day into one transmission.
	Real Time TX	-	Send a fax without using the memory.
	Overseas Mode	-	Set to On if you have difficulty sending faxes overseas.
	Set New Default	-	Save your settings as the default.
	Factory Reset	-	Restore all settings back to the factory settings.
Save as Shortcut	-	-	Save the current settings as a shortcut.

[Fax] (When [Fax Preview] is [On])

Level 1	Level 2	Level 3	Level 4	Descriptions
Sending Faxes	Address Book		-	Search within the Address Book.

Level 1	Level 2	Level 3	Level 4	Descriptions
Sending Faxes	Address Book	(Search:)		
		Edit	-	Store Address Book numbers, set up Group numbers for Broadcasting, and change and delete Address Book numbers.
		-	Apply	Start sending a fax using the Address Book.
	Call History	Redial	-	Redial the last number you dialled.
		Outgoing Call	Apply	Select a number from the Outgoing Call history and then send a fax to it, add it to the Address Book, or delete it.
			Edit	
		Caller ID History	Apply	Select a number from the Caller ID history and then send a fax to it, add it to the Address Book, or delete it.
			Edit	
	Options	Fax Resolution	-	Set the resolution for outgoing faxes.
		2-sided Fax	-	Set the 2-sided scanning format.
		Contrast	-	Adjust the contrast.
		Document Size	-	Set the document size for outgoing faxes.
		Scan Long Paper	-	Scan a long document using the ADF.
		Broadcasting	Add Number	Send the same fax message to more than one fax number.
		Preview	-	Preview a fax message before you send it.
		Colour Setting	-	Set whether faxes are sent in monochrome or colour.
		Delayed Fax	Delayed Fax	Set the time of day the delayed faxes will be sent.
			Set Time	
		Batch TX	-	Combine delayed faxes to the same fax number at the same time of day into one transmission.
		Real Time TX	-	Send a fax without using the memory.
		Overseas Mode	-	Set to On if you have difficulty sending faxes overseas.
		Set New Default	-	Save your settings as the default.
		Factory Reset	-	Restore all settings back to the factory settings.
	Save as Shortcut	-	-	Save the current settings as a shortcut.
Received Faxes	Print/ Delete	Print All(New Faxes)	-	Print the new received faxes.
		Print All(Old Faxes)	-	Print the old received faxes.
		Delete All(New Faxes)	-	Delete the new received faxes.
		Delete All(Old Faxes)	-	Delete the old received faxes.
Address Book	(Search:)	-	-	Search within the Address Book.

Level 1	Level 2	Level 3	Level 4	Descriptions
Address Book	Edit	-	-	Store Address Book numbers, set up Group numbers for Broadcasting, and change and delete Address Book numbers.
	-	Apply	-	Start sending a fax using the Address Book.
Call History	Redial	-	-	Redial the last number you dialled.
	Outgoing Call	Apply	-	Select a number from the Outgoing Call history and then send a fax to it, add it to the Address Book, or delete it.
		Edit	-	
	Caller ID History	Apply	-	Select a number from the Caller ID history and then send a fax to it, add it to the Address Book, or delete it.
		Edit	-	

[Copy]

Level 1	Level 2	Level 3	Descriptions
Preset (Appears when you press ▶.)	A4 ⇒ A3 Normal 2sided(1⇒2) 2sided(2⇒2) 2in1(ID) 2in1 Poster Ink Save Book	-	Select the settings you want.
Save as Shortcut	-	-	Save the current settings as a shortcut.
Options	Quality	-	Select the Copy resolution for your document type.
	Paper Type	-	Select the paper type that matches the paper in the tray.
	Paper Size	-	Select the paper size that matches the paper in the tray.
	Tray Select	-	Select the tray to be used for Copy mode.
	Enlarge/Reduce	100%	-
		Enlarge	Select an enlargement ratio for the next copy.
		Reduce	Select a reduction ratio for the next copy.
		Fit to Page	Adjust the copy size to fit on the paper size you have set.
		Custom(25-400%)	Enter an enlargement or reduction ratio.
	Density	-	Adjust the density.
	Stack/Sort	-	Select to stack or sort multiple copies.
	Page Layout	-	Make N in 1, 2 in 1 ID, 1 to 2, or Poster copies.
	Layout Format (When you set A3 or Ledger, and then choose 2 in 1 or Poster 2x2)		
	Auto Deskew	-	Set the machine to correct a skewed copy.

Level 1	Level 2	Level 3	Descriptions
Options	2-sided Copy	-	Turn off or turn on 2-sided copying and select flip on long edge or flip on short edge.
	Advanced Settings	-	Select advanced copy settings.

[Scan]

Level 1	Level 2	Level 3	Level 4	Descriptions
to Media (When a USB Flash drive is inserted)	Other Scan to Actions	-	-	Scan documents and save them directly to a USB flash drive without using a computer.
	Options	-	-	
	Save as Shortcut	-	-	
to PC	to File	Other Scan to Actions	-	Scan documents and save them to a folder on your computer.
		(Select USB or PC)	Options	
			Save as Shortcut	
	to OCR	Other Scan to Actions	-	Convert your scanned document to an editable text file.
		(Select USB or PC)	Options	
			Save as Shortcut	
	to Image	Other Scan to Actions	-	Scan photos or graphics into your graphics applications.
		(Select USB or PC)	Options	
			Save as Shortcut	
	to E-mail	Other Scan to Actions	-	Send a scanned document as an email attachment.
		(Select USB or PC)	Options	
			Save as Shortcut	
to E-mail Server (Available after Internet Fax (I-Fax) is downloaded.)	Other Scan to Actions	-	-	Send scanned data to an email server by allowing your machine to communicate with your network and mail server.
	Address Book	-	-	
	Manual	-	-	
	Next	Destinations	-	
		Options	-	
		Save as Shortcut	-	
	Destinations	-	-	
to FTP	Other Scan to Actions	-	-	Scan documents directly to an FTP server.
	(Select Profile name)	Options	-	
		Save as Shortcut	-	

Level 1	Level 2	Level 3	Level 4	Descriptions
to Network	Other Scan to Actions	-	-	Scan documents directly to a CIFS server on your local network.
	(Select Profile name)	Options	-	
		Save as Shortcut	-	
to Web	-	-	-	Upload the scanned data to an Internet service.
WS Scan (Appears when you install a Web Services Scanner, which is displayed in your computer's Network explorer.)	Other Scan to Actions	-	-	Scan data using the Web Service protocol.
	Scan	-	-	
	Scan for E-mail	-	-	
	Scan for Fax	-	-	
	Scan for Print	-	-	

[Web]

Level 1	Descriptions
Web	Connect the Brother machine to an Internet service.

[Apps]

Level 1	Descriptions
Apps	Connect the Brother machine to the Brother Apps service.

[USB]

Level 1	Level 2	Level 3	Level 4	Descriptions
JPEG Print	Select Files	OK	Print Settings	Adjust your photos with the options.
		Print All	-	Print all photos in your USB flash drive.
	Index Print	Print Index Sheet	Print Settings	Print a thumbnail page.
		Print Photos Using Index No.	Print Settings	Print photos by choosing the index numbers.
Scan to Media	-	-	-	Scan documents into a USB flash drive.
Web	-	-	-	Connect the Brother machine to an Internet service.

[A3 Copy Shortcuts]

Level 1	Level 2	Level 3	Descriptions
A3 2in1 A3 A4 ⇒ A3 A3 ⇒ A4 A4 + Note(L)	Options	Quality	Select the Copy resolution for your document type.
		Paper Type	View the available paper type.
		Paper Size	Set the size of paper in the paper tray.

Level 1	Level 2	Level 3	Descriptions
A4 + Note(P) A4 + Grid A4 + Blank A4 Center	Options	Tray Select	Set the machine to automatically select the tray that contains the most appropriate paper.
		Density	Adjust the density.
		Auto Deskew	Set the machine to correct a skewed copy.

[2 in 1 ID Copy]

Level 1	Descriptions
2 in 1 ID Copy	Copy both sides of an identification card onto one page.

[Download Software]

Level 1	Descriptions
Download Software	Displays information about downloading and installing software for mobile devices and computers.

[Shortcuts]

Level 1	Level 2	Level 3	Descriptions
Add Shortcut	Copy	-	Change the settings in the Copy Options.
	Fax	-	Change the settings in the Fax Options.
	Scan	to PC(File)	Scan a monochrome or a colour document to your computer.
		to PC(OCR)	Convert your scanned document to an editable text file.
		to PC(Image)	Scan a colour picture into your graphics application.
		to PC(E-mail)	Scan a monochrome or a colour document into your email application.
		to Media	Scan documents and save them directly to a USB flash drive without using a computer.
		to E-mail Server (Available after Internet Fax (I-Fax) is downloaded.)	Scan a monochrome or a colour document to your email server.
		to Network	Send scanned data to a CIFS server on your local network or on the Internet.
		to FTP	Send scanned data via FTP.
	Web	-	Connect the Brother machine to an Internet service.
	Apps	-	Connect the Brother machine to the Brother Apps service.
This list appears when each Shortcut icon is pressed for 2 seconds.	Rename	-	Change the shortcut name.
	Edit	-	Change the shortcut settings.
	Delete	-	Delete the shortcut.
Edit/ Delete	(Select shortcut button.)	Rename	Change the shortcut name.
		Edit	Change the shortcut settings.

Level 1	Level 2	Level 3	Descriptions
Edit/ Delete	(Select shortcut button.)	Delete	Delete the shortcut.

[Ink]

Level 1	Level 2	Descriptions
Ink Volume	-	Check the available ink volume.
Ink Cartridge Model	-	Check your ink cartridge numbers.
Improve Print Quality	-	Check and correct the print quality, alignment and paper feeding according to the LCD instructions.
Print Head Cleaning	-	Clean the print head according to the LCD instructions.
Remove Paper Scraps	-	Remove a piece of paper in the machine according to the LCD instructions.
Print Setting Options	Reduce Smudging	Reduce smudging on the paper or paper jams during printing.
	Reduce Uneven Lines	Reduce uneven lines on the paper during printing.
	Slow Drying Paper	Use this setting when printing with a type of plain paper on which the ink dries very slowly.

(Wi-Fi Setup)

Level 1	Descriptions
Setup Wizard	Configure your internal print server manually.
WLAN Assistant	Configure your wireless network settings using the Brother CD-ROM.
WPS	Configure your wireless network settings using the one-button push method.

When you have put a USB Flash drive in the USB slot

Level 1	Descriptions
JPEG Print	Select photo menu.
Scan to Media	Scan documents into a USB flash drive.
Web	Connect the Brother machine to an Internet service.

Related Information

- Settings and Features Tables

Change Machine Settings from Your Computer

- Change Machine Settings Using Web Based Management
- Change the Machine Settings Using Remote Setup
- Where Can I Find My Brother Machine's Network Settings?
- Network Management Software and Utilities

Change Machine Settings Using Web Based Management

Web Based Management is a utility that uses a standard web browser to manage your machine using the Hyper Text Transfer Protocol (HTTP) or Hyper Text Transfer Protocol over Secure Socket Layer (HTTPS).

- What is Web Based Management?
- Access Web Based Management
- Set a Login Password for Web Based Management

What is Web Based Management?

Web Based Management is a utility that uses a standard web browser to manage your machine using the Hyper Text Transfer Protocol (HTTP) or Hyper Text Transfer Protocol over Secure Socket Layer (HTTPS). Type your machine's IP address into your web browser to access and change your print server settings.

- We recommend Microsoft Internet Explorer 8/11 for Windows and Safari 9 for Mac. Make sure that JavaScript and Cookies are always enabled in whichever browser you use. If you use different web browser, make sure it is compatible with HTTP 1.0 and HTTP 1.1.
- You must use the TCP/IP protocol on your network and have a valid IP address programmed into the print server and your computer.

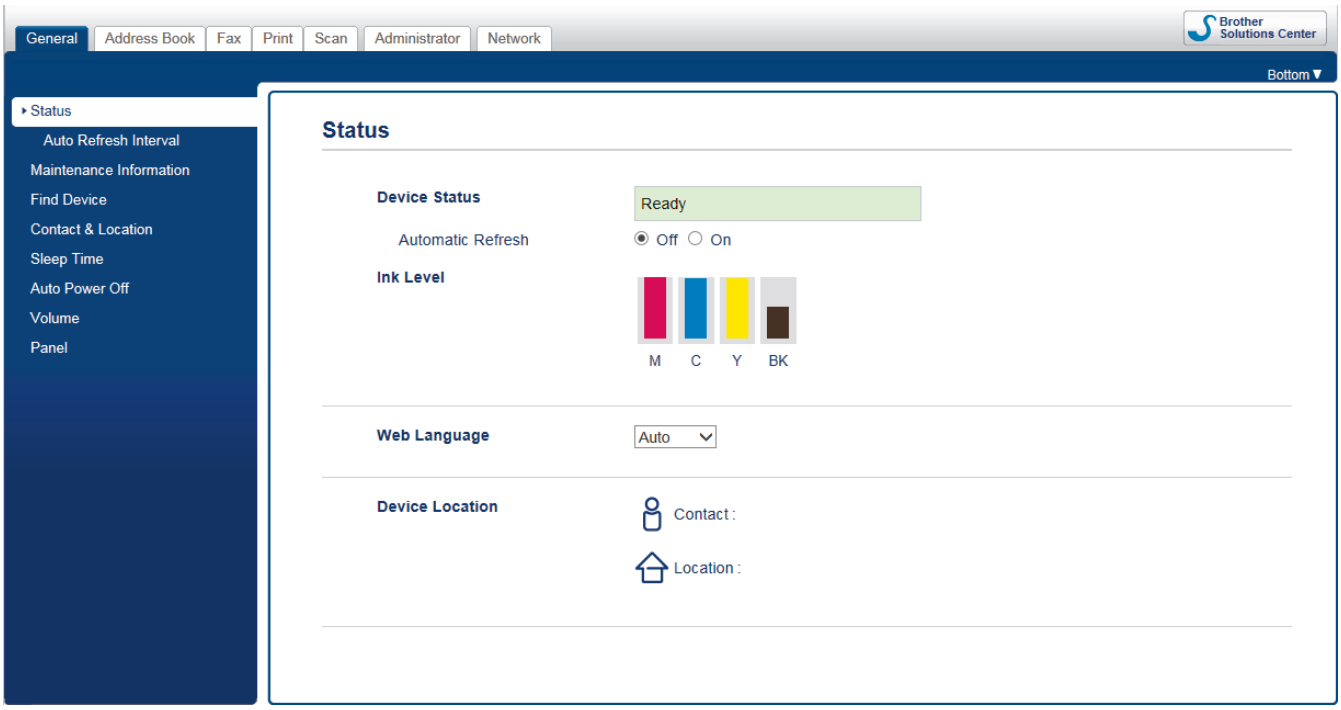

- The actual screen may differ from the screen shown above.

Related Information

- Change Machine Settings Using Web Based Management

Access Web Based Management

- We recommend using the HTTPS security protocol when configuring settings using Web Based Management.
- When you use HTTPS for Web Based Management configuration, your browser will display a warning dialog box.

1. Start your web browser.
2. Type "http://machine's IP address" in your browser's address bar (where "machine's IP address" is the machine's IP address).

   For example:

   http://192.168.1.2

- If you are using a Domain Name System or enable a NetBIOS name, you can type another name, such as "SharedPrinter" instead of the IP address.
  - For example:

    http://SharedPrinter

  If you enable a NetBIOS name, you can also use the node name.
  - For example:

    http://brnxxxxxxxxxxxx

  The NetBIOS name can be found in the Network Configuration Report.
- For Mac, access Web Based Management by clicking the machine's icon on the **Status Monitor** screen.

3. No password is required by default. Type a password if you have set one, and then click .

You can now change the print server settings.

If you change the protocol settings, you must restart the machine after clicking **Submit** to activate the configuration.

Related Information

- Change Machine Settings Using Web Based Management
- Print the Network Configuration Report
- Monitor Machine Status from Your Computer (Mac)

Set a Login Password for Web Based Management

We recommend setting a login password to prevent unauthorised access to Web Based Management.

1. Start your web browser.
2. Type "http://machine's IP address" in your browser's address bar (where "machine's IP address" is the machine's IP address).

   For example:

   http://192.168.1.2

- If you are using a Domain Name System or enable a NetBIOS name, you can type another name, such as "SharedPrinter" instead of the IP address.
  - For example:

    http://SharedPrinter

  If you enable a NetBIOS name, you can also use the node name.
  - For example:

    http://brnxxxxxxxxxxxx

  The NetBIOS name can be found in the Network Configuration Report.
- For Mac, access Web Based Management by clicking the machine's icon on the **Status Monitor** screen.

3. No password is required by default. Type a password if you have set one, and then click .
4. Click **Administrator**.
5. Type the password you want to use in the **Enter New Password** field (8 to 32 characters).
6. Retype the password in the **Confirm New Password** field.
7. Click **Submit**.

In the future, every time you access Web Based Management, type the password in the **Login** field, and then click .

After configuring the settings, log off by clicking .

If you have not previously set a login password, you can also set a password by clicking the **Please configure the password** button on the machine's web page.

Related Information

- Change Machine Settings Using Web Based Management

Change the Machine Settings Using Remote Setup

The Remote Setup program lets you configure many of your Brother machine's settings from your computer. When you start Remote Setup, the settings on your Brother machine will be downloaded to your computer and displayed on your screen. If you change the settings on your computer, you can upload them directly to the machine.

- Remote Setup (Windows)
- Remote Setup (Mac)

Remote Setup (Windows)

- Set Up the Brother Machine from Your Computer (Windows)
- Set Up the Brother Machine Using ControlCenter4 (Windows)
- Set Up Your Machine's Address Book Using ControlCenter4 (Windows)

Set Up the Brother Machine from Your Computer (Windows)

If Secure Function Lock is set to On, you cannot use Remote Setup.

1. Do one of the following:
   - Windows Vista and Windows 7

     Click **(Start)** > **All Programs** > **Brother** > **Brother Utilities**.

     Click the drop-down list and select your model name (if not already selected). Click **Tools** in the left navigation bar, and then click **Remote Setup**.
   - Windows 8 and Windows 10

     Launch (**Brother Utilities**), and then click the drop-down list and select your model name (if not already selected). Click **Tools** in the left navigation bar, and then click **Remote Setup**.

   The Remote Setup Program window appears.

When your machine is connected via a Network, type the password if required.

2. Configure the settings as needed.

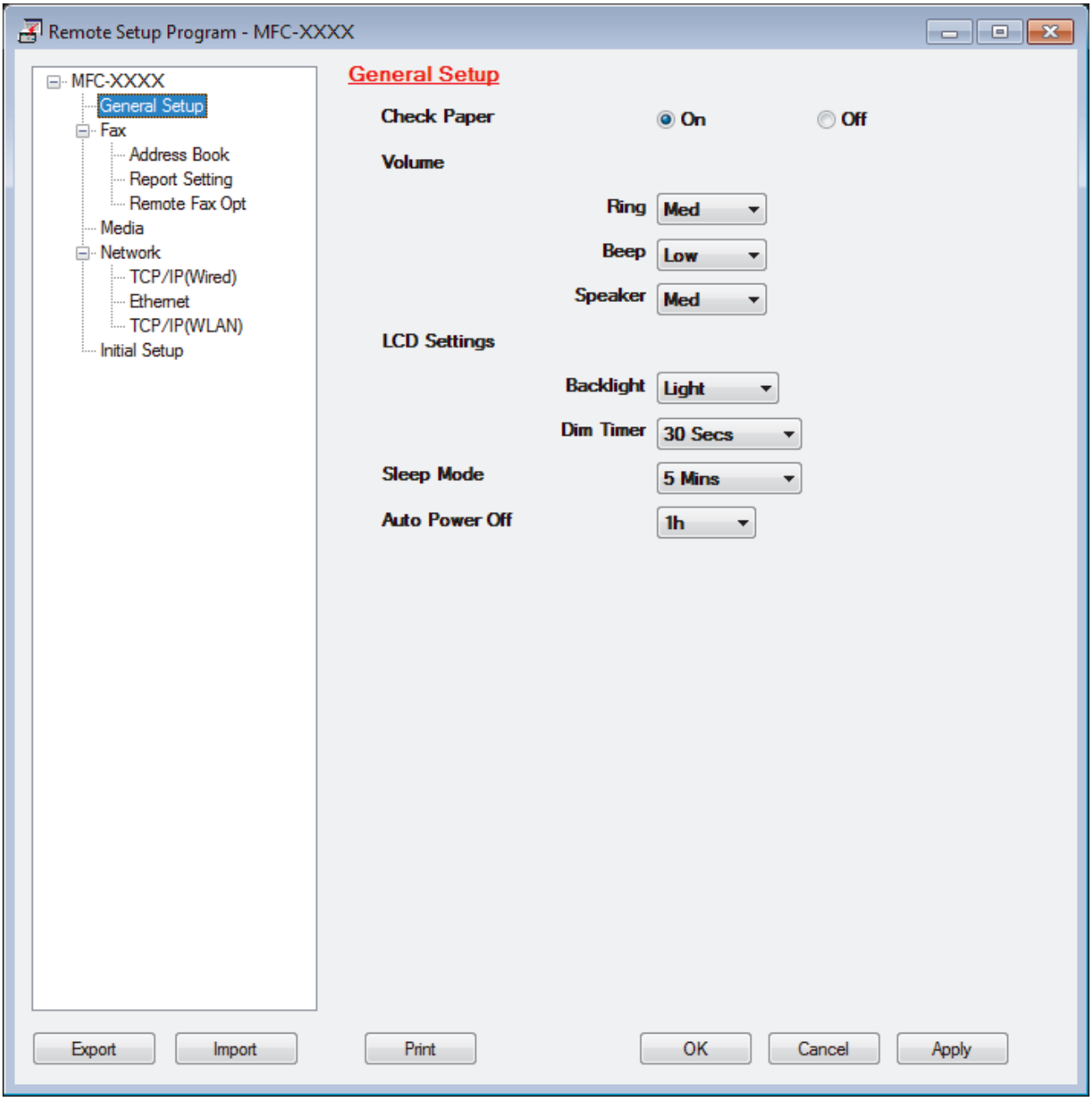

Export

Click to save the current configuration settings to a file.

Click **Export** to save your address book or all settings for your machine.

Import

Click to import a file and read its settings.

Print

Click to print the selected items on the machine. You cannot print the data until it is uploaded to the machine. Click **Apply** to upload the new data to the machine, and then click **Print**.

OK

Click to start uploading data to the machine, and then exit the Remote Setup Program. If an error message appears, confirm that your data is correct, and then click **OK**.

Cancel

Click to exit the Remote Setup Program without uploading data to the machine.

Apply

Click to upload data to the machine without exiting the Remote Setup Program.

3. Click **OK**.

- If your computer is protected by a firewall and is unable to use Remote Setup, you may need to configure the firewall settings to allow communication through port numbers 137 and 161.
- If you are using Windows Firewall and you installed the Brother software and drivers from the CD-ROM, the necessary firewall settings have already been set.

Related Information

- Remote Setup (Windows)
- ControlCenter4 (Windows)

Set Up the Brother Machine Using ControlCenter4 (Windows)

If Secure Function Lock is set to On, you cannot use Remote Setup.

1. Click the (**ControlCenter4**) icon in the task tray, and then click **Open**.
2. Click the **Device Settings** tab.
3. Click the **Remote Setup** button.
4. Configure the settings as needed.

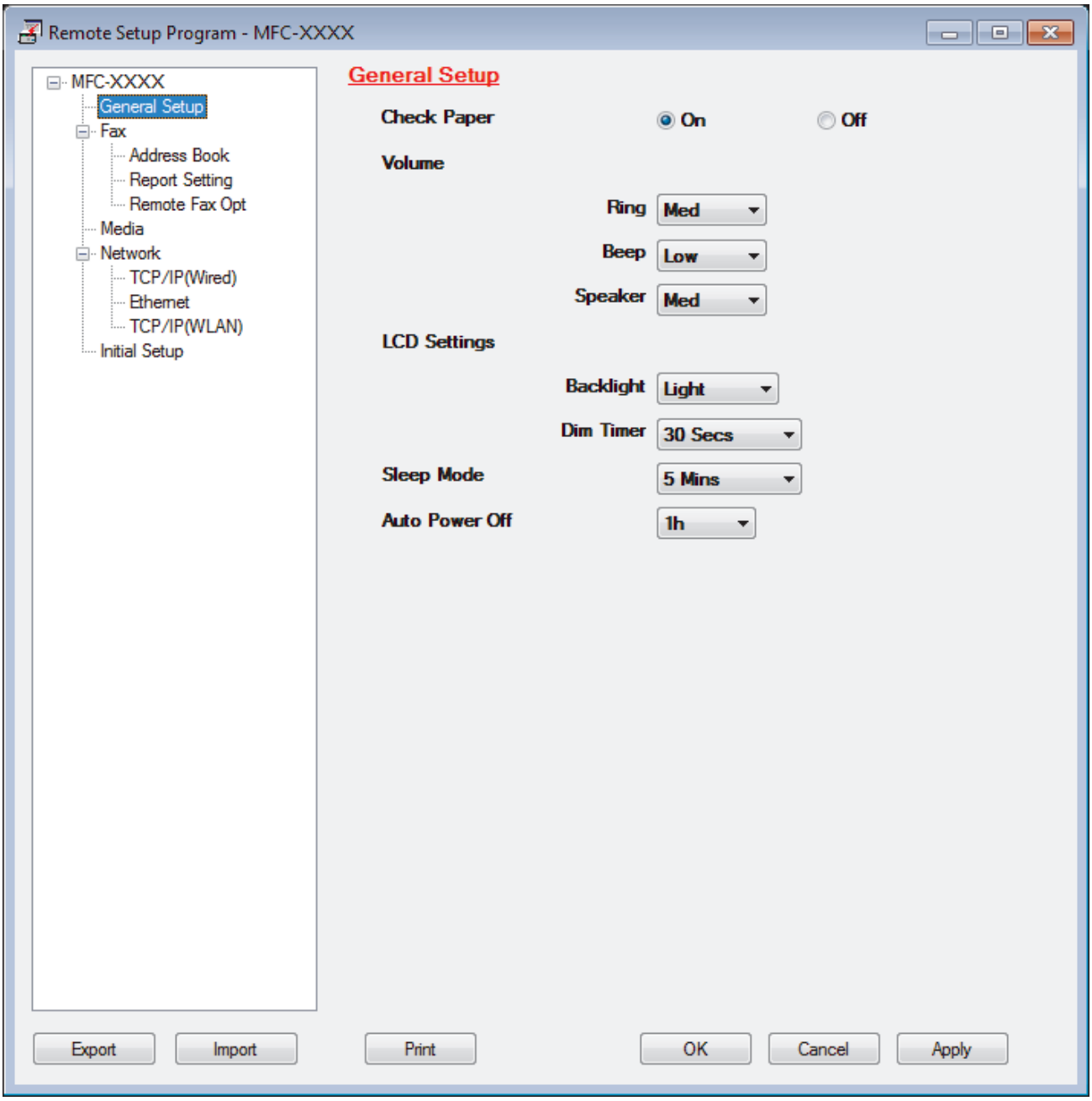

Export

Click to save the current configuration settings to a file.

Click **Export** to save your address book or all settings for your machine.

Import

Click to import a file and read its settings.

Print

Click to print the selected items on the machine. You cannot print the data until it is uploaded to the machine. Click **Apply** to upload the new data to the machine, and then click **Print**.

OK

Click to start uploading data to the machine, and then exit the Remote Setup Program. If an error message appears, confirm that your data is correct, and then click **OK**.

Cancel

Click to exit the Remote Setup Program without uploading data to the machine.

Apply

Click to upload data to the machine without exiting the Remote Setup Program.

5. Click **OK**.

- If your computer is protected by a firewall and is unable to use Remote Setup, you may need to configure the firewall settings to allow communication through port numbers 137 and 161.
- If you are using Windows Firewall and you installed the Brother software and drivers from the CD-ROM, the necessary firewall settings have already been set.

Related Information

- ControlCenter4 (Windows)
- Remote Setup (Windows)

Set Up Your Machine's Address Book Using ControlCenter4 (Windows)

Use Remote Setup through CC4 to add or change Address Book numbers on your computer.

If Secure Function Lock is set to On, you cannot use Remote Setup.

1. Click the (**ControlCenter4**) icon in the task tray, and then click **Open**.
2. Click the **Device Settings** tab.
3. Click the **Address Book** button.
   The **Address Book** opens in a Remote Setup window.
4. Add or update the Address Book information as needed.
5. Click **OK**.

Related Information

- Remote Setup (Windows)
- ControlCenter4 (Windows)

Remote Setup (Mac)

- Set Up the Brother Machine Using ControlCenter2 (Mac)
- Set Up Your Machine's Address Book Using ControlCenter2 (Mac)

Set Up the Brother Machine Using ControlCenter2 (Mac)

If Secure Function Lock is set to On, you cannot use Remote Setup.

1. In the **Finder** menu bar, click **Go** > **Applications** > **Brother**, and then double-click the (**ControlCenter**) icon.
   The **ControlCenter2** screen appears.
2. Click the **DEVICE SETTINGS** tab.
3. Click the **Remote Setup** button.
   The Remote Setup Program screen appears.

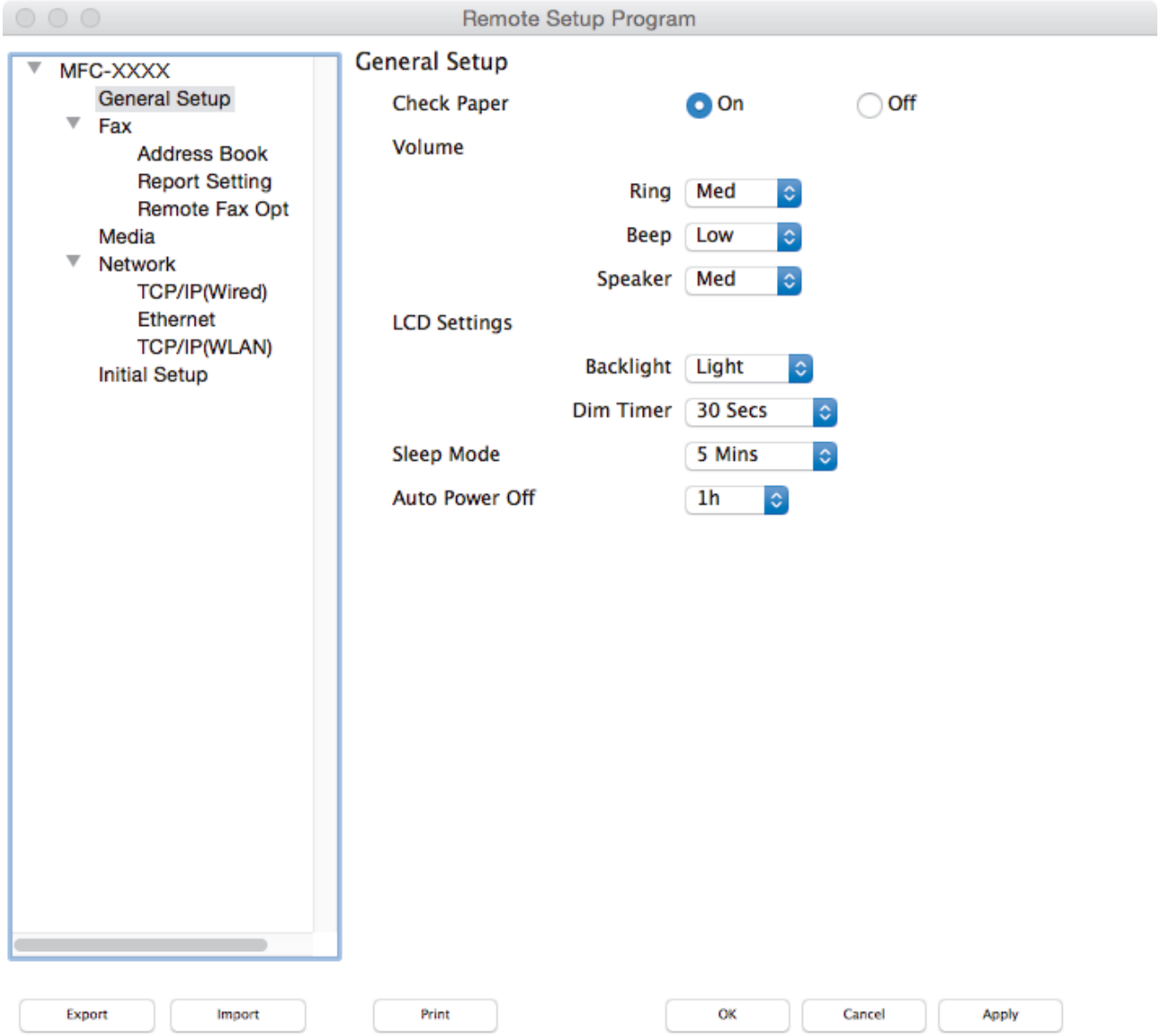

4. Configure the settings as needed.

   Export

   Click to save the current configuration settings to a file.

Click **Export** to save your address book or all settings for your machine.

Import

Click to import a file and read its settings.

Print

Click to print the selected items on the machine. You cannot print the data until it is uploaded to the machine. Click **Apply** to upload the new data to the machine, and then click **Print**.

OK

Click to start uploading data to the machine, and then exit the Remote Setup Program. If an error message appears, enter the correct data again, and then click **OK**.

Cancel

Click to exit the Remote Setup Program without uploading data to the machine.

Apply

Click to upload data to the machine without exiting the Remote Setup Program.

5. When finished, click **OK**.

Related Information

- ControlCenter2 (Mac)
- Remote Setup (Mac)

Set Up Your Machine's Address Book Using ControlCenter2 (Mac)

Use Remote Setup through ControlCenter2 to add or change Address Book numbers on your computer.

If Secure Function Lock is set to On, you cannot use Remote Setup.

1. In the **Finder** menu bar, click **Go** > **Applications** > **Brother**, and then double-click the (**ControlCenter**) icon.
   The **ControlCenter2** screen appears.
2. Click the **DEVICE SETTINGS** tab.
3. Click the **Address Book** button.
   The **Address Book** opens in a Remote Setup window.
4. Add or update the Address Book information as needed.
5. When finished, click **OK**.

Related Information

- Remote Setup (Mac)
- ControlCenter2 (Mac)

Appendix

- Specifications
- Supply Specifications
- Enter Text on Your Brother Machine
- To create a better environment
- Brother Numbers

Specifications

General Specifications

Printer Type		Inkjet
Print Head	**Mono**	Piezo with 420 nozzles x 1
	Colour	Piezo with 420 nozzles x 3
Memory Capacity		• MFC-J3530DW 128 MB • MFC-J3930DW 256 MB
LCD (liquid crystal display) [1]		• MFC-J3530DW 2.7 in. (67.5 mm) TFT Colour Touchscreen LCD • MFC-J3930DW 3.7 in. (93.4 mm) TFT Colour Touchscreen LCD
Power Source		AC 220 to 240 V 50/60 Hz
Power Consumption [2]		• MFC-J3530DW **Copying** [3]: Approx. 27 W **Ready** [4]: Approx. 6.0 W **Sleep** [4]: Approx. 1.6 W **Power Off** [4] [5]: Approx. 0.04 W • MFC-J3930DW **Copying** [6]: Approx. 29 W **Ready** [4]: Approx. 6.5 W **Sleep** [4]: Approx. 1.7 W **Power Off** [4] [5]: Approx. 0.04 W
Dimensions		• MFC-J3530DW 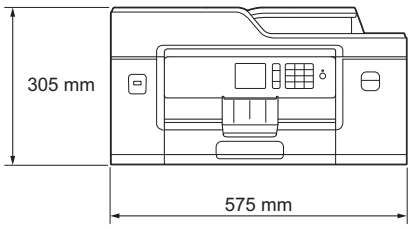 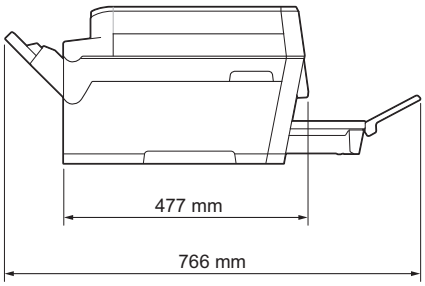

			• MFC-J3930DW 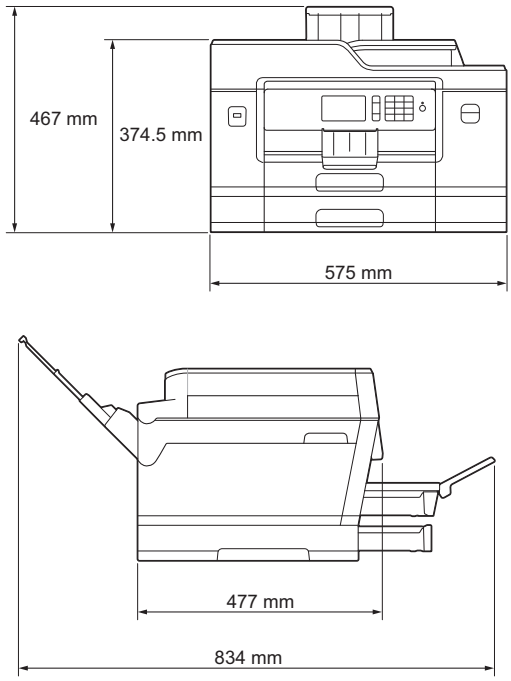
Weights			• MFC-J3530DW 19.6 kg • MFC-J3930DW 23.6 kg
Noise Level	**Sound Pressure**	**Operating**	50 dB (A) (Approx.) [7]
Temperature	**Operating**		10 to 35 °C
	Best Print Quality		20 to 33 °C
Humidity	**Operating**		20 to 80% (without condensation)
	Best Print Quality		20 to 80% (without condensation)
ADF (automatic document feeder)			Up to 50 pages [8] Paper: 80 gsm

1 Measured diagonally
2 Measured when the machine is connected to the USB interface. Power consumption varies slightly depending on the usage environment or part wear.
3 When using ADF, single-sided printing, resolution: standard / document: ISO/IEC 24712 printed pattern.
4 Measured according to IEC 62301 Edition 2.0.
5 Even when the machine is turned off, it will automatically turn itself on periodically for print head maintenance, and then turn itself off.
6 When using ADF, single-sided printing and scanning, resolution: standard / document: ISO/IEC 24712 printed pattern.
7 Noise depends on printing conditions.
8 MFC-J3530DW: Up to 30 pages when copying with the sort function.

Document Size Specifications

Document Size	**ADF Width**	105 to 297 mm
	ADF Length [1]	148 to 431.8 mm
	Scanner Glass Width	Max. 297 mm
	Scanner Glass Length	Max. 431.8 mm

1 Up to 900 mm when using the long paper function.

Print Media Specifications

Paper Input	**Paper Tray #1**	**Paper Type** [1]	Plain Paper, Inkjet Paper (coated paper), Glossy Paper, Recycled Paper
		Paper Size	(Landscape) A4, Letter, Executive, B5 (JIS) (Portrait) A3, Ledger, B4 (JIS), Legal, Mexico Legal, India Legal, Folio, A5, B6 (JIS), A6, Envelopes (C5, Com-10, DL, Monarch), Photo (10 x 15 cm), Photo L (9 x 13 cm), Photo 2L (13 x 18 cm), Index card (13 x 20 cm), 16K (195 x 270 mm)
		Maximum Paper Capacity	Up to 250 sheets of 80 gsm plain paper
	Paper Tray #2 (MFC-J3930DW)	**Paper Type**	Plain Paper, Recycled Paper
		Paper Size	(Landscape) A4, Letter (Portrait) A3, Ledger, B4 (JIS), Legal, Mexico Legal, India Legal, Folio
		Maximum Paper Capacity	Up to 250 sheets of 80 gsm plain paper
	Multi-purpose tray (MP tray) [2] (MFC-J3930DW)	**Paper Type** [1]	Plain Paper, Inkjet Paper (coated paper), Glossy Paper, Recycled Paper
		Paper Size	(Landscape) A4, Letter, Executive, B5 (JIS) (Portrait) A3, Ledger, B4 (JIS), Legal, Mexico Legal, India Legal, Folio, A5, B6 (JIS), A6, Envelopes (C5, Com-10, DL, Monarch), Photo (10 x 15 cm), Photo L (9 x 13 cm), Photo 2L (13 x 18 cm), Index card (13 x 20 cm), 16K (195 x 270 mm)
		Maximum Paper Capacity	Up to 100 sheets of 80 g/m² Plain Paper
	Manual Feed Slot (MFC-J3530DW)	**Paper Type** [1]	Plain Paper, Inkjet Paper (coated paper), Glossy Paper, Recycled Paper
		Paper Size	(Landscape) A4, Letter, Executive, B5 (JIS) (Portrait) A3, Ledger, B4 (JIS), Legal, Mexico Legal, India Legal, Folio, A5, B6 (JIS), A6, Envelopes (C5, Com-10, DL, Monarch), Photo (10 x 15 cm), Photo L (9 x 13 cm), Photo 2L (13 x 18 cm), Index card (13 x 20 cm), 16K (195 x 270 mm)
		Maximum Paper Capacity	Up to 1 sheet
Paper Output [1]			• Up to A4/Letter size paper Up to 100 sheets of 80 g/m² Plain Paper (face up print delivery to the output paper tray) • Over A4/Letter size paper Up to 50 sheets of 80 g/m² Plain Paper (face up print delivery to the output paper tray)

[1] For glossy paper, remove printed pages from the output paper tray immediately after they exit the machine to avoid smudging.

2 We recommend using the MP tray for glossy paper.

Fax Specifications

Compatibility	• ITU-T Super Group 3
Modem Speed	• Automatic Fallback: 33,600 bps
Scanning Width (Single-sided document)	288 mm (A3)
Scanning Width and Length (2-sided document) (MFC-J3930DW)	Width: 288 mm (A3) (ADF) Length: 425.8 mm (ADF)
Printing Width	291 mm (A3)
Greyscale	Monochrome: 8 bit (256 levels) Colour: 24 bit (8 bit per colour/ 256 levels)
Resolution **(Horizontal)**	203 dpi
Resolution **(Vertical)**	Standard: 98 dpi (Mono) 196 dpi (Colour)
	Fine: 196 dpi (Mono) 196 dpi (Colour)
	Superfine: 392 dpi (Mono)
	Photo: 196 dpi (Mono)
Address Book	100 names x 2 numbers or E-mail addresses [1]
Groups	Up to 6
Broadcasting	250 (200 Address Book/50 Manual Dial)
Automatic Redial	3 times at 5 minute intervals
Memory Transmission	Up to 200 pages [2]
Out of Paper Reception	Up to 200 pages [2]

1 E-mail addresses are available after Internet Fax (I-Fax) is downloaded.

2 'Pages' refers to the 'ITU-T Test Chart #1' (a typical business letter, Standard resolution, MMR code).

Copy Specifications

Colour/Monochrome		Yes/Yes
Copy Width		291 mm [1]
Multiple Copies		Stacks/Sorts up to 99 pages
Enlarge/Reduce		25% to 400% (in increments of 1%)
Resolution		Prints up to 1200 × 4800 dpi
2-sided	**Paper Type**	Plain Paper, Recycled Paper
	Paper Size	A3, Ledger, Legal, Mexico Legal, India Legal, Folio, A4, A5, Letter

1 When copying on A3 size paper.

USB Flash Drive Specifications

Compatible Media		USB Flash drive [1]
JPEG Print	**Resolution**	Up to 1200 x 4800 dpi
	Paper Type	Plain Paper, Inkjet Paper (coated paper), Glossy Paper, Recycled Paper
	Paper Size	A4, Letter, A3, Ledger, Photo (10 x 15 cm), Photo 2L (13 x 18 cm)
	File Format	JPEG (Progressive JPEG format is not supported)
Scan to Media	**File Format**	JPEG, PDF (Colour, Grey) TIFF, PDF (Monochrome)

1 USB Flash drive is not included. Full-Speed USB 2.0. USB Mass Storage standard up to 256 GB. Supported formats: FAT12/FAT16/FAT32/exFAT

Scanner Specifications

Colour/Monochrome	Yes/Yes
TWAIN Compliant	Yes (Windows Vista / Windows 7 / Windows 8 / Windows 10) (OS X v10.9.5 / 10.10.x /10.11.x)
WIA Compliant	Yes (Windows Vista / Windows 7 / Windows 8 / Windows 10)
ICA Compliant	Yes (OS X v10.9.5 / 10.10.x /10.11.x)
Colour Depth	48 bit colour processing (Input) 24 bit colour processing (Output)
Greyscale	16 bit colour processing (Input) 8 bit colour processing (Output)
Resolution	Up to 19200 × 19200 dpi (interpolated) [1] Up to 1200 × 2400 dpi (optical) (from Scanner Glass) Up to 600 × 600 dpi (optical) (from ADF)
Scanning Width and Length (Single-sided document)	(Scanner Glass) Width: Up to 295 mm Length: Up to 429.8 mm (ADF) Width: Up to 295 mm Length: Up to 429.8 mm
Scanning Width and Length (2-sided document) (MFC-J3930DW)	Width: Up to 295 mm (ADF) Length: Up to 429.8 mm (ADF)

1 Maximum 1200 × 1200 dpi scanning with the WIA driver in Windows Vista, Windows 7 , Windows 8 and Windows 10 (resolution up to 19200 × 19200 dpi can be selected using the scanner utility).

Printer Specifications

Resolution		Up to 1200 × 4800 dpi
Printing Width [1]		291 mm [297 mm (borderless)] [2]
Borderless		A4, Letter, A3, Ledger, A6, Photo (10 x 15 cm), Photo L (9 x 13 cm), Photo 2L (13 x 18 cm), Index card (13 x 20 cm)
Automatic 2-sided	**Paper Type**	Plain Paper, Recycled Paper

Automatic 2-sided	**Paper Size**	A3, Ledger, B4 (JIS), Legal, Mexico Legal, India Legal, Folio, A4, A5, Letter, Executive, B5 (JIS), B6 (JIS), 16K (195 x 270 mm)
Print Speed		For detailed specifications visit www.brother.com.

1 When printing on A3 size paper.
2 When the Borderless feature is set to On.

Interface Specifications

USB [1 2]	Use a USB 2.0 interface cable that is 2 m.
LAN	Use an Ethernet UTP cable category 5 or greater.
Wireless LAN	IEEE 802.11b/g/n (Infrastructure) IEEE 802.11g/n (Wi-Fi Direct)
NFC (MFC-J3930DW)	Yes

1 Your machine has a USB 2.0 Hi-Speed interface. The machine can also be connected to a computer that has a USB 1.1 interface.
2 Third party USB ports are not supported.

Network Specifications

You can connect your machine to a network for Network Printing, Network Scanning, PC-Fax Send, PC-Fax Receive (Windows only), and Remote Setup.

Brother BRAdmin Light (Windows only) Network Management software is also available as a download from Brother Solutions Center. Go to your model's **Downloads** page on the Brother Solutions Center at support.brother.com to download the software.
(Windows) If you require more advanced machine management, use the latest Brother BRAdmin Professional utility version. Go to your model's **Downloads** page on the Brother Solutions Center at support.brother.com to download the software.

Wireless Network Security		WEP 64/128 bit, WPA-PSK (TKIP/AES), WPA2-PSK (TKIP/AES) [1]
Wireless Setup Support Utility	**WPS**	Yes

1 Wi-Fi Direct supports WPA2-PSK (AES) only.

Computer Requirements Specifications

Supported Operating Systems And Software Functions

Computer Platform & Operating System Version		**PC Interface**			**Processor**	**Hard Disk Space to Install**	
		USB [1]	**10/100 Base-TX (Ethernet)**	**Wireless 802.11b/g/n**		**For Drivers**	**For Applications (Including Drivers)**
Windows Operating System	Windows Vista [2 3]	Printing PC Fax [4] Scanning			32 bit (x86) or 64 bit (x64) processor	500 MB	1.3 GB
	Windows 7 [2 3] Windows 8 [2 3] Windows 8.1 [2 3]					650 MB	

	Windows 10 Home [2] [3] Windows 10 Pro [2] [3] Windows 10 Education [2] [3] Windows 10 Enterprise [2] [3]					
	Windows Server 2008	N/A	Printing		50 MB	N/A
	Windows Server 2008 R2 Windows Server 2012 Windows Server 2012 R2			64 bit (x64) processor		
Mac Operating System	OS X v10.9.5 OS X v10.10.x OS X v10.11.x	Printing PC-Fax (Send) [4] Scanning		Intel® Processor	80 MB	550 MB

1 Third party USB ports are not supported.

2 For WIA, 1200 x 1200 resolution. Brother Scanner Utility enables enhancing up to 19200 x 19200 dpi.

3 Nuance™ PaperPort™ 14 supports Windows Vista (SP2 or greater), Windows 7, Windows 8, Windows 8.1, Windows 10 Home, Windows 10 Pro, Windows 10 Education and Windows 10 Enterprise.

4 PC-Fax supports black and white only.

For the latest driver updates, visit support.brother.com and go to your model's **Downloads** page.

All trademarks, brand and product names are the property of their respective companies.

Related Information

- Appendix

Supply Specifications

Ink	The machine uses individual Black, Yellow, Cyan and Magenta ink cartridges that are separate from the print head assembly.
Service Life of Ink Cartridge	The first time you install a set of ink cartridges the machine will use an amount of ink to fill the ink delivery tubes for high quality printouts. This process will only happen once. After this process is complete the cartridges provided with your machine will have a lower yield than the Super High Yield replacement cartridges. With all following ink cartridges you can print the specified number of pages.
Replacement Supplies	<Super High Yield Black> LC3919BK <Super High Yield Yellow>LC3919Y <Super High Yield Cyan> LC3919C <Super High Yield Magenta> LC3919M Black - Approximately 3000 pages [1] Yellow, Cyan and Magenta - Approximately 1500 pages [1]
	For more information about the replacement supplies, visit us www.brother.com/pageyield
What is Innobella?	Innobella is a range of genuine supplies offered by Brother. The name "Innobella" derives from the words "Innovation" and "Bella" (meaning "Beautiful" in Italian) and is a representation of the "innovative" technology providing you with "beautiful" and "long lasting" print results. When you print photo images, Brother recommends Innobella glossy photo paper (BP71 series) for high quality. Brilliant prints are made easier with Innobella Ink and paper.

[1] Approx. cartridge yield is declared in accordance with ISO/IEC 24711

Related Information

- Appendix

Enter Text on Your Brother Machine

- The characters that are available may differ depending on your country.
- The keyboard layout may differ depending on the function you are setting.

>> MFC-J3530DW
>> MFC-J3930DW

MFC-J3530DW

When you need to enter text on your Brother machine, a keyboard will appear on the touchscreen.

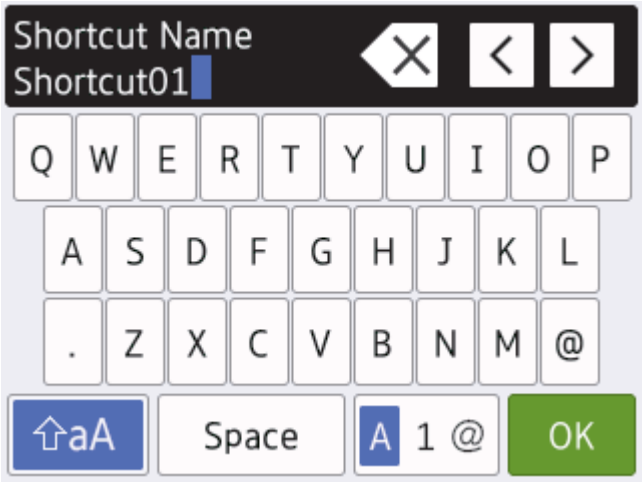

- Press A 1 @ to cycle between letters, numbers and special characters.
- Press ⇧aA to cycle between lowercase and uppercase letters.
- To move the cursor to the left or right, press ◀ or ▶.

Inserting spaces

- To enter a space, press [Space]. Or, you can press ▶ to move the cursor.

Making corrections

- If you entered an incorrect character and want to change it, press ◀ or ▶ to highlight the incorrect character. Press ⌫, and then enter the correct character.
- To insert a character, press ◀ or ▶ to move the cursor to the correct place, and then enter the character.
- Press ⌫ for each character you want to erase, or press and hold ⌫ to erase all the characters.

MFC-J3930DW

When you need to enter text on your Brother machine, a keyboard will appear on the touchscreen.

- Press A 1 @ to cycle between letters, numbers and special characters.
- Press ⇧aA to cycle between lowercase and uppercase letters.
- To move the cursor to the left or right, press ◀ or ▶.

Inserting spaces

- To enter a space, press `[Space]`. Or, you can press ▶ to move the cursor.

Making corrections

- If you entered an incorrect character and want to change it, press ◀ or ▶ to highlight the incorrect character. Press ⌫, and then enter the correct character.
- To insert a character, press ◀ or ▶ to move the cursor to the correct place, and then enter the character.
- Press ⌫ for each character you want to erase, or press and hold ⌫ to erase all the characters.

Related Information

- Appendix
- Send the Same Fax to More than One Recipient (Broadcasting)
- Store Address Book Numbers from Outgoing Calls
- Store Address Book Numbers from Caller ID History
- Change a Broadcasting Group Name
- Set Your Station ID
- Change or Delete Shortcuts

To create a better environment

Please cooperate.

Firstly, thank you very much indeed for using our Brother products!

Brother focuses on the earth environment concerned. And make a basic policy which is to concern about the earth environment, including any workflow from product development to discard. The local citizen should be responsible for local society and its environment during these environment protection activities.

Therefore, we hope you'll take part in this environment plan, and pay attention to environment protection points as below while discarding used consumables.

1. Please deliver the used package materials to relevant waste disposal office for recycle.
2. When you discard used consumables, please follow and carry on relevant local regulations properly.
3. When the machine need replacing parts for the maintenance and repair, please discard used circuit boards, used electrical parts and products as disposed electrical materials.
4. The power consumption is 0 W after you turn off the machine and unplug it from the AC outlet.
5. Some parts in the machine can be used on the same series model machines which are produced in the same factory.

   Note: If you want to replace the parts, please contact Brother Authorized Service Centers.
6. Machines with an LWAd > 63.0 dB(A) are recommended to be set up in separate rooms due to their noise emissions.
7. The machine can use recycled paper.
8. Ensure that during use the machine is used in a well ventilated area.
9. Brother will accept machines and consumables for recycling. For details of the return scheme please refer to the webpage

   www.brother.cn/company/info/declaration/20090304.html.

Related Information

- Appendix

Brother Numbers

IMPORTANT

For technical and operational assistance, call the call center in mainland China.

To seach Frequently asked questions (FAQs)/ASCs/Driver/Manuals, etc, please visit our service website:

support.brother.com

To search where to purchase consumables, please visit the official website of BROTHER (CHINA) LTD.:

www.brother.cn

Related Information

- Appendix

brother

Brother Earth

www.brotherearth.com

CHN-ENG
Version B