Online User's Guide

DCP-J572DW
DCP-J772DW
MFC-J491DW
MFC-J690DW
MFC-J890DW

© 2017 Brother Industries, Ltd. All rights reserved.

Table of Contents

Before You Use Your Brother Machine 1
Definitions of Notes 2
Trademarks 3
Important Note 4
Introduction to Your Brother Machine 5
Before Using Your Machine 6
Control Panel Overview 7
LCD Overview 12
Touchscreen LCD Overview 14
New Information from Brother 19
Settings Screen Overview 20
Navigate the Touchscreen 23
Access Brother Utilities (Windows) 24
Uninstall the Brother Software and Drivers (Windows) 25
Paper Handling 26
Load Paper 27
Load Paper in the Paper Tray 28
Load Photo or Photo L Paper in Photo Paper Tray 43
Load Paper in the Manual Feed Slot 45
Unprintable Area 49
Paper Settings 50
Acceptable Paper and Other Print Media 53
Load Documents 62
Load Documents in the Automatic Document Feeder (ADF) 63
Load Documents on the Scanner Glass 65
Unscannable Area 66
Print 67
Print from Your Computer (Windows) 68
Print a Photo (Windows) 69
Print a Document (Windows) 70
Cancel a Print Job (Windows) 71
Print More Than One Page on a Single Sheet of Paper (N in 1) (Windows) 72
Print as a Poster (Windows) 73
Print on Both Sides of the Paper Automatically (Automatic 2-sided Printing) (Windows) 74
Print as a Booklet Automatically (Windows) 77
Print a Colour Document in Greyscale (Windows) 79
Prevent Smudged Printouts and Paper Jams (Windows) 80
Use a Preset Print Profile (Windows) 81
Change the Default Print Settings (Windows) 84
Print Settings (Windows) 85
Print from Your Computer (Mac) 90
Print a Photo (Mac) 91
Print a Document (Mac) 92
Print on Both Sides of the Paper Automatically (Automatic 2-sided Printing) (Mac) 93
Print More Than One Page on a Single Sheet of Paper (N in 1) (Mac) 94

Print a Colour Document in Greyscale (Mac) ... 95
Prevent Smudged Printouts and Paper Jams (Mac) ... 96
Print Options (Mac) ... 97
Scan ... 102
Scan Using the Scan Button on Your Brother Machine ... 103
Scan Photos and Graphics ... 104
Save Scanned Data to a Folder as a PDF File ... 107
Save Scanned Data to a Memory Card or USB Flash Drive ... 110
Scan Multiple Business Cards and Photos (Auto Crop) ... 114
Scan to an Editable Text File Using OCR ... 116
Scan to Email Attachment ... 119
Web Services for Scanning on Your Network (Windows 7, Windows 8 and Windows 10) ... 122
Change Scan Button Settings from ControlCenter4 (Windows) ... 126
Change Scan Button Settings from Brother iPrint&Scan (Mac) ... 130
Scan from Your Computer (Windows) ... 131
Scan Using ControlCenter4 Home Mode (Windows) ... 132
Scan Using ControlCenter4 Advanced Mode (Windows) ... 147
Scan Using Nuance™ PaperPort™ 14SE or Other Windows Applications ... 162
Scan Using Windows Fax and Scan ... 167
Install BookScan Enhancer and Whiteboard Enhancer (Windows) ... 170
Scan from Your Computer (Mac) ... 171
Scan Using Brother iPrint&Scan (Mac) ... 172
Scan Using TWAIN-Compliant Applications (Mac) ... 173
Copy ... 176
Copy a Document ... 177
Enlarge or Reduce Copied Images ... 179
Sort Copies ... 181
Make Page Layout Copies (N in 1 or Poster) ... 182
Copy on Both Sides of the Paper (2-sided Copy) ... 186
Copy an ID Card ... 189
Copy in Ink Save Mode ... 191
Copy Options ... 192
Fax ... 196
Send a Fax ... 197
Send a Fax from Your Brother Machine ... 198
Send a Fax Manually ... 201
Send a Fax at the End of a Conversation ... 202
Send the Same Fax to More than One Recipient (Broadcasting) ... 203
Send a Fax in Real Time ... 206
Send a Fax at a Specified Time (Delayed Fax) ... 207
Change the Fax Auto Redial Setting ... 208
Cancel a Fax in Progress ... 209
Check and Cancel a Pending Fax ... 210
Fax Options ... 211
Receive a Fax ... 213
Receive Mode Settings ... 214
Fax Preview ... 221

Shrink Page Size of an Oversized Incoming Fax ... 225
Set the Fax Receive Stamp ... 226
Receive a Fax at the End of a Telephone Conversation ... 227
Memory Receive Options ... 228
Remote Fax Retrieval ... 236
Voice Operations and Fax Numbers ... 242
Voice Operations ... 243
Store Fax Numbers ... 246
Set up Groups for Broadcasting ... 254
Telephone Services and External Devices ... 259
Distinctive Ring ... 260
Caller ID ... 264
Set the Telephone Line Type ... 266
FaxAbility ... 268
Voice Over Internet Protocol (VoIP/Telephone Line Interference) ... 270
External TAD (Telephone Answering Device) ... 271
External and Extension Telephones ... 275
Fax Reports ... 281
Set the Transmission Verification Report's Style ... 282
Set the Fax Journal's Interval Period ... 284
PC-FAX ... 286
PC-FAX for Windows ... 287
PC-FAX for Mac ... 310
PhotoCapture Center ... 313
Print Photos Directly from Media ... 314
Compatible Media ... 315
Important Information about Photo Printing ... 316
Print Photos from Media on the Brother Machine ... 317
Copy Photos from Media to a Computer ... 331
Before Copying Photos ... 332
Copy Photos from Media Over a Local Connection ... 333
Print Photos from ControlCenter4 (Windows) ... 334
Edit Photos Using ControlCenter4 (Windows) ... 336
Network ... 338
Supported Basic Network Features ... 339
Network Management Software and Utilities ... 340
Learn about Network Management Software and Utilities ... 341
Additional Methods of Configuring Your Brother Machine for a Wireless Network ... 342
Before Configuring Your Brother Machine for a Wireless Network ... 343
Configure Your Machine for a Wireless Network Using the One Push Method of Wi-Fi Protected Setup™ (WPS) ... 344
Configure Your Machine for a Wireless Network Using the PIN Method of Wi-Fi Protected Setup™ (WPS) ... 346
Configure Your Machine for a Wireless Network When the SSID is Not Broadcast ... 349
Use Wi-Fi Direct® ... 352
Advanced Network Features ... 365
Print the Network Configuration Report ... 366

Technical Information for Advanced Users ... 367
Reset the Network Settings to Factory Default ... 368
Print the WLAN Report ... 369
Security ... 372
Lock the Machine Settings ... 373
About Using Memory Security ... 374
About Using TX Lock ... 378
Mobile/Web Connect ... 382
Brother Web Connect ... 383
Brother Web Connect Overview ... 384
Online Services Used with Brother Web Connect ... 385
Conditions for Using Brother Web Connect ... 387
Set Up Brother Web Connect ... 390
Scan and Upload Documents Using Brother Web Connect ... 399
Upload a Document from an External Memory Device Using Brother Web Connect ... 401
Download and Print Documents Using Brother Web Connect ... 402
Download and Save a Document to an External Memory Device Using Brother Web Connect ... 405
FaxForward to Cloud or E-mail ... 407
Google Cloud Print ... 410
Google Cloud Print Overview ... 411
Before Using Google Cloud Print ... 412
Print from Google Chrome™ or Chrome OS™ ... 417
Print from Google Drive™ for Mobile ... 418
Print from Gmail™ Webmail Service for Mobile ... 419
AirPrint ... 420
AirPrint Overview ... 421
Before Using AirPrint (macOS) ... 422
Print Using AirPrint ... 423
Scan Using AirPrint (macOS) ... 426
Send a Fax Using AirPrint (macOS) ... 427
Mobile Printing for Windows ... 428
Mopria® Print Service ... 429
Brother iPrint&Scan for mobile ... 430
Near-Field Communication (NFC) ... 431
ControlCenter ... 432
ControlCenter4 (Windows) ... 433
Change the Operation Mode in ControlCenter4 (Windows) ... 434
Scan Using ControlCenter4 Home Mode (Windows) ... 436
Scan Using ControlCenter4 Advanced Mode (Windows) ... 437
Set Up the Brother Machine Using ControlCenter4 (Windows) ... 438
Create a Custom Tab Using ControlCenter4 Advanced Mode (Windows) ... 440
Brother iPrint&Scan for Windows and Mac ... 442
Brother iPrint&Scan Overview ... 443
Troubleshooting ... 444
Error and Maintenance Messages ... 445
Transfer Your Faxes or Fax Journal Report ... 460

Error Messages When Using the Brother Web Connect Feature ... 465
Document Jams ... 467
Document is Jammed in the Top of the ADF Unit ... 468
Document is Jammed inside the ADF Unit ... 469
Remove Paper Scraps Jammed in the ADF ... 470
Printer Jam or Paper Jam ... 471
Paper is Jammed Inside and in the Front of the Machine (Jam A Inside/Front) ... 472
Paper is Jammed in the Front of the Machine (Jam B Front) ... 477
Paper is Jammed in the Back of the Machine (Jam C Rear) ... 480
If You Are Having Difficulty with Your Machine ... 483
Paper Handling and Printing Problems ... 484
Telephone and Fax Problems ... 490
Other Problems ... 497
Network Problems ... 499
Google Cloud Print Problems ... 509
AirPrint Problems ... 510
Check the Machine Information ... 511
Reset Your Brother Machine ... 512
Reset Functions Overview ... 513
Routine Maintenance ... 514
Replace the Ink Cartridges ... 515
Clean Your Brother Machine ... 518
Clean the Scanner ... 519
Clean the Print Head from Your Brother Machine ... 521
Clean the Print Head from Your Computer (Windows) ... 523
Clean the Print Head from Your Computer (Mac) ... 524
Clean the Machine's LCD ... 525
Clean the Outside of the Machine ... 526
Clean the Machine's Printer Platen ... 527
Clean the Paper Feed Rollers ... 528
Clean the Base Pad ... 530
Clean the Paper Pick-up Rollers ... 531
Check Your Brother Machine ... 532
Check the Print Quality ... 533
Check the Print Alignment from Your Brother Machine ... 536
Check the Ink Volume ... 538
Monitor Machine Status from Your Computer (Windows) ... 540
Monitor Machine Status from Your Computer (Mac) ... 545
Correct the Paper Feed to Clear Vertical Lines ... 547
Change the Print Setting Options When Having Printing Problems ... 548
Pack and Ship Your Brother Machine ... 550
Machine Settings ... 553
Change Machine Settings from the Control Panel ... 554
In the Event of Power Failure (Memory Storage) ... 555
General Settings ... 556
Save Your Favourite Settings as a Shortcut ... 571
Print Reports ... 574

Settings and Features Tables 577
Change Machine Settings from Your Computer 601
Change the Machine Settings Using Remote Setup 602
Appendix 614
Specifications 615
Enter Text on Your Brother Machine 624
Supply Specifications 627
Brother Numbers 628

Before You Use Your Brother Machine

- Definitions of Notes
- Trademarks
- Important Note

Definitions of Notes

We use the following symbols and conventions throughout this User's Guide:

⚠ WARNING	WARNING indicates a potentially hazardous situation which, if not avoided, could result in death or serious injuries.
⚠ CAUTION	CAUTION indicates a potentially hazardous situation which, if not avoided, may result in minor or moderate injuries.
IMPORTANT	IMPORTANT indicates a potentially hazardous situation which, if not avoided, may result in damage to property or loss of product functionality.
NOTE	NOTE specifies the operating environment, conditions for installation, or special conditions of use.
	Tips icons indicate helpful hints and supplementary information.
	Electrical Hazard icons alert you to possible electrical shock.
Bold	Bold style identifies buttons on the machine's control panel or computer screen.
Italics	Italicised style emphasises an important point or refers you to a related topic.
Courier New	Courier New font identifies messages shown on the machine's LCD.

Related Information

- Before You Use Your Brother Machine

Trademarks

Microsoft, Windows, Windows Server, SharePoint, Internet Explorer, Excel, PowerPoint, OneNote and OneDrive are either registered trademarks or trademarks of Microsoft Corporation in the United States and/or other countries.

Apple, App Store, Mac, Safari, iPad, iPhone, iPod touch and macOS are trademarks of Apple Inc., registered in the United States and other countries.

AirPrint and the AirPrint logo are trademarks of Apple Inc., registered in the U.S. and other countries.

Nuance and PaperPort are trademarks or registered trademarks of Nuance Communications, Inc. or its affiliates in the United States and/or other countries.

The SDHC Logo is a trademark of SD-3C, LLC.

Wi-Fi®, Wi-Fi Alliance® and Wi-Fi Direct® are registered trademarks of Wi-Fi Alliance®.

WPA™, WPA2™, Wi-Fi Protected Setup™ and Wi-Fi Protected Setup™ logo are trademarks of Wi-Fi Alliance®.

Android, Gmail, Google Cloud Print, Google Drive, Google Play, Google Chrome, Chrome OS and Google are trademarks of Google, Inc. Use of these trademarks are subject to Google Permissions.

Mozilla and Firefox are registered trademarks of the Mozilla Foundation.

The Bluetooth® word mark and logos are registered trademarks owned by the Bluetooth SIG, Inc. and any use of such marks by Brother Industries, Ltd. and related companies is under license. Other trademarks and trade names are those of their respective owners.

Intel is a trademark of Intel Corporation in the U.S. and/or other countries.

Evernote and the Evernote Elephant logo are trademarks of Evernote Corporation and used under a license.

Mopria® and Mopria logo are registered trademarks and service marks of Mopria Alliance, Inc. in the United States and other countries. Unauthorized use is strictly prohibited.

WordPerfect is a trademark or a registered trademark of Corel Corporation and/or its subsidiaries in Canada, the United States and/or other countries.

Each company whose software title is mentioned in this manual has a Software License Agreement specific to its proprietary programs.

Any trade names and product names of companies appearing on Brother products, related documents and any other materials are all trademarks or registered trademarks of those respective companies.

Related Information

- Before You Use Your Brother Machine

Important Note

- Do not use this product outside the country of purchase as it may violate the wireless telecommunication and power regulations of that country.
- Windows 10 in this document represents Windows 10 Home, Windows 10 Pro, Windows 10 Education and Windows 10 Enterprise.
- Windows Server 2008 in this document represents Windows Server 2008 and Windows Server 2008 R2.
- In this User's Guide, the LCD messages of the DCP-J572DW/DCP-J772DW are used unless otherwise specified.
- In this User's Guide, the illustrations of the are used unless otherwise specified.
- The screens in this User's Guide are for illustration purposes only and may differ from the actual screens.
- Unless otherwise specified, the screens in this manual are from Windows 7 and macOS v10.12.x. Screens on your computer may vary depending on your operating system.
- The contents of this guide and the specifications of this product are subject to change without notice.
- This documentation is for both MFC and DCP models. Read 'XXX-XXXX' as 'MFC/DCP-XXXX' (where XXXX is the name of your model).

Related Information

- Before You Use Your Brother Machine

Introduction to Your Brother Machine

- Before Using Your Machine
- Control Panel Overview
- LCD Overview
- Touchscreen LCD Overview
- Settings Screen Overview
- Navigate the Touchscreen
- Access Brother Utilities (Windows)

Before Using Your Machine

Before attempting any printing operation, confirm the following:

- Make sure you have installed the Brother software and drivers.
- For USB or network cable users: Make sure the interface cable is physically secure.

Selecting the correct type of paper

For high quality printing, it is important to select the correct type of paper. Be sure to read the information about acceptable paper before buying paper, and to determine the printable area depending on the settings in the printer driver.

Simultaneous printing, scanning and faxing

Your machine can print from your computer while sending or receiving a fax into memory or while scanning a document into the computer. Fax sending will not be stopped during printing from your computer. However, when the machine is copying or receiving a fax on paper, it pauses the printing operation, and then continues printing when copying or fax receiving has finished.

DCP models do not support the fax feature.

Firewall (Windows)

If your computer is protected by a firewall and you are unable to network print, network scan, or PC-FAX, you may need to configure the firewall settings. If you are using the Windows Firewall and you installed the drivers using the steps in the installer, the necessary firewall settings have been already set. If you are using any other personal firewall software, see the User's Guide for your software or contact the software manufacturer.

Related Information

- Introduction to Your Brother Machine

Control Panel Overview

MFC-J491DW

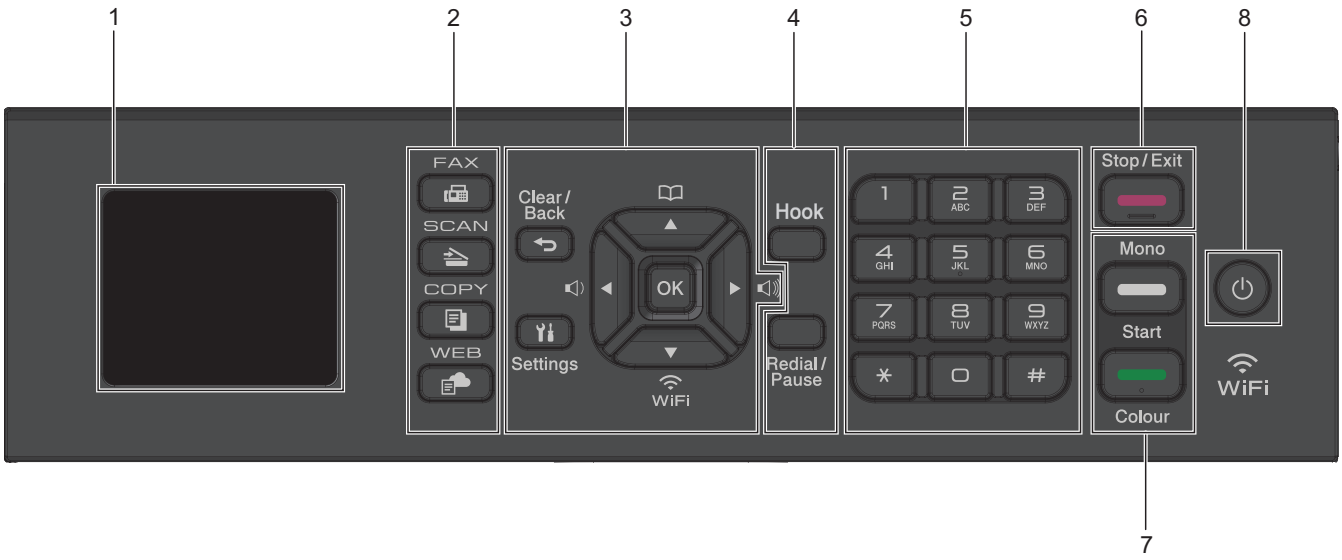

1. **1.8"(44.9 mm) Liquid Crystal Display (LCD)**

   Displays messages to help you set up and use the machine.

2. **Mode buttons**

   FAX

   Press to switch the machine to Fax mode.

   SCAN

   Press to switch the machine to Scan mode.

   COPY

   Press to switch the machine to Copy mode.

   WEB

   Press to switch the machine to Web mode.

3. **Settings buttons**

   Clear/Back

   Press to go back to the previous menu level.

   Settings

   Press to access the main menu.

   OK

   Press to select a setting.

   ◀ or ▶

   Press to adjust the ring volume while the machine is idle.

   ▲

   - Press to store Speed Dial and Group numbers in the machine's memory.

- Press to look up and dial numbers that are stored in the machine's memory.

▼ WiFi

Press to configure the wireless settings while the machine is idle.

▲ or ▼

Press to scroll through the menus and options.

◀ or ▶

- Press to move the cursor left or right on the LCD.
- Press to either confirm or cancel a procedure which is in progress.

4. **Telephone buttons**

Hook

If the machine is in Fax/Tel (F/T) mode and you pick up the handset of an external telephone during the F/T ring (pseudo/double-ring), press **Hook** to talk.

Redial/Pause

- Press to redial the last number you called.
- Press to select and redial the numbers from the Outgoing Call history or Caller ID history.
- Press to insert a pause when dialling numbers.

5. **Dial Pad**
   - Use to dial fax and telephone numbers.
   - Use as a keyboard to enter text or characters.
6. **Stop/Exit**
   - Press to stop an operation.
   - Press to exit from a menu.
7. **Start buttons**

Mono Start

- Press to start sending faxes in monochrome.
- Press to start making copies in monochrome.
- Press to start scanning documents (in colour or monochrome, depending on the scan setting).

Colour Start

- Press to start sending faxes in full colour.
- Press to start making copies in full colour.
- Press to start scanning documents (in colour or monochrome, depending on the scan setting).

8. **Power On/Off**

Press to turn the machine on.

Press and hold down to turn the machine off. The LCD displays `[Shutting Down]` and stays on for a few seconds before turning itself off. If you have connected an external telephone or TAD, it is always available.

If you turn the machine off using , it will still clean the print head periodically to maintain print quality. To prolong print head life, provide better ink efficiency, and maintain print quality, keep your machine connected to a power source at all times.

DCP-J572DW

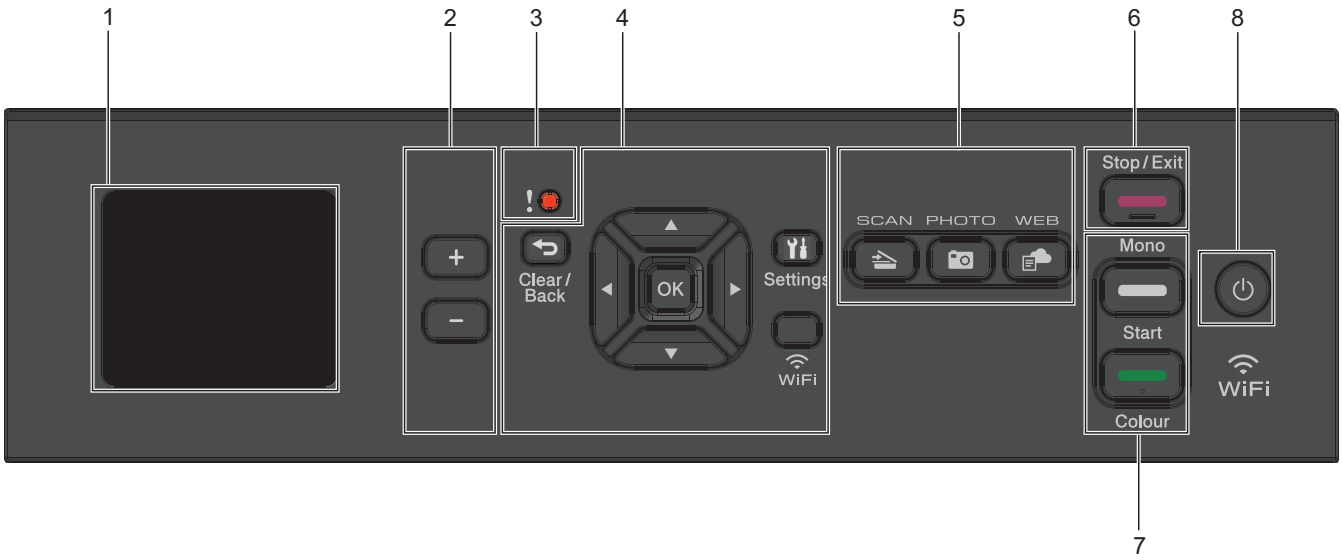

1. **1.8"(44.9 mm) Liquid Crystal Display (LCD)**

   Displays messages to help you set up and use the machine.

2. **Number of Copies**

   Press + to increase or - to decrease the number of copies.

3. **Warning icon**

   The warning icon lights up when there is an error or maintenance message.

4. **Settings buttons**

   Clear/Back

   Press to go back to the previous menu level.

   Settings

   Press to access the main menu.

   OK

   Press to select a setting.

   WiFi

   Press to configure the wireless settings while the machine is idle.

   ▲ or ▼

   Press to scroll through the menus and options.

   ◀ or ▶

   - Press to move the cursor left or right on the LCD.
   - Press to either confirm or cancel a procedure which is in progress.

5. **Mode buttons**

   SCAN

   Press to switch the machine to Scan mode.

   PHOTO

   Press to switch the machine to Photo mode.

   WEB

   Press to switch the machine to Web mode.

6. **Stop/Exit**
   - Press to stop an operation.
   - Press to exit from a menu.
7. **Start buttons**

   Mono Start
   - Press to start making copies in monochrome.
   - Press to start scanning documents (in colour or monochrome, depending on the scan setting).

   Colour Start
   - Press to start making copies in full colour.
   - Press to start scanning documents (in colour or monochrome, depending on the scan setting).
8. **Power On/Off**

   Press to turn the machine on.

   Press and hold down to turn the machine off. The LCD displays `[Shutting Down]` and stays on for a few seconds before turning itself off.

   If you turn the machine off using , it will still clean the print head periodically to maintain print quality. To prolong print head life, provide better ink efficiency, and maintain print quality, keep your machine connected to a power source at all times.

DCP-J772DW/MFC-J690DW/MFC-J890DW

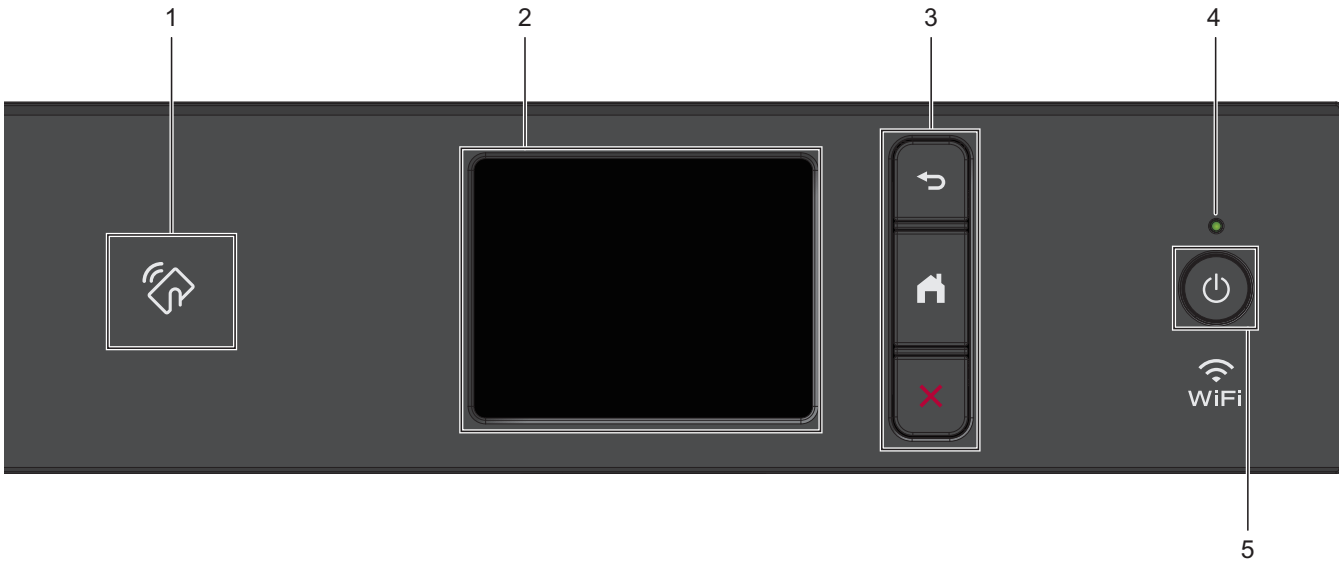

1. **NFC (Near Field Communication) symbol**

   (MFC-J890DW)

   If your Android™ device supports the NFC feature, you can print from your device or scan documents to your device by touching it to the NFC logo on the control panel.
2. **Touchscreen Liquid Crystal Display (LCD)**

   Access menus and options by pressing them on the touchscreen.
3. **Menu buttons**

   (Back)

   Press to go back to the previous menu.

(Home)

Press to return to the Home screen.

(Cancel)

Press to cancel an operation.

4. **LED Power Indicator**

   The LED lights up depending on the machine's power status.

   When the machine is in Sleep Mode, the LED blinks.

5. **Power On/Off**

   Press to turn the machine on.

   Press and hold down to turn the machine off. The touchscreen displays `[Shutting Down]` and stays on for a few seconds before turning itself off. If you have connected an external telephone or TAD, it is always available (MFC models).

   If you turn the machine off using , it will still clean the print head periodically to maintain print quality. To prolong print head life, provide better ink efficiency, and maintain print quality, keep your machine connected to a power source at all times.

Related Information

- Introduction to Your Brother Machine
- Near-Field Communication (NFC)

LCD Overview

Related Models: DCP-J572DW/MFC-J491DW

MFC-J491DW

This screen shows the machine's status when the machine is idle. When displayed, this indicates that your machine is ready for the next command.

Home Screen

1. **Quiet Mode**

   This icon appears when the `[Quiet Mode]` setting is set to `[On]`.

   The Quiet Mode setting can reduce printing noise. When Quiet Mode is turned on, the print speed becomes slower.

2. **Wireless Status**

   Each icon in the following table shows the wireless network status:

	Wireless network is connected. A three-level indicator in the Home screen displays the current wireless signal strength.
	The wireless access point cannot be detected.
	The wireless setting is disabled.

3. **`[Ink]`**

   Displays the available ink volume.

   When an ink cartridge is near the end of its life or having a problem, an error icon is displayed on the ink colour.

4. **Date and Time**

   Displays the date and time set on the machine.

5. **Faxes in Memory**

   Displays how many received faxes are in the machine's memory.

6. **Receive Mode**

   Displays the current Receive Mode.

(For some countries)

When the Distinctive Ring feature is turned on, the LCD displays `[D/R]`.

(For New Zealand)

When the FaxAbility feature is turned on, the LCD displays `[D/R]`.

DCP-J572DW

The LCD shows the machine's status when the machine is idle.

Home Screen

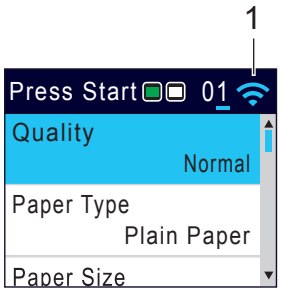

1. **Wireless Status**

   Each icon in the following table shows the wireless network status:

	Wireless network is connected. A three-level indicator in each of the Home screens displays the current wireless signal strength.
	The wireless access point cannot be detected.
	The wireless setting is disabled.

You can configure wireless settings by pressing **WiFi** on the control panel.

Related Information

- Introduction to Your Brother Machine

Touchscreen LCD Overview

Related Models: DCP-J772DW/MFC-J690DW/MFC-J890DW

MFC-J690DW/MFC-J890DW

You can switch Home screens by pressing ◀ or ▶.

From the Home screens, you can access Wi-Fi® setup, Shortcuts, Ink levels and Setup screens.

Home Screen

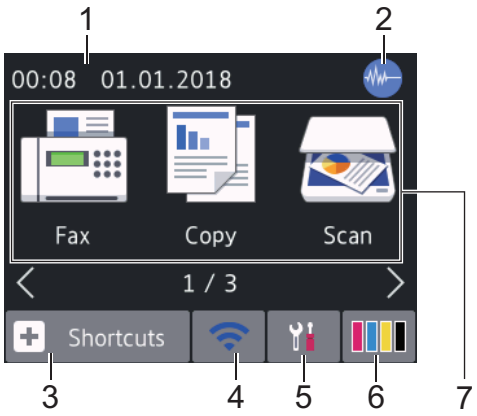

This screen shows the machine's status when the machine is idle. When displayed, it indicates that your machine is ready for the next command.

1. **Date & Time**

   Displays the date and time set on the machine.

2. **Quiet Mode**

   This icon appears when the `[Quiet Mode]` setting is set to `[On]`.

   The Quiet Mode setting can reduce printing noise. When Quiet Mode is turned on, the print speed becomes slower.

3. **`[Shortcuts]`**

   Create Shortcuts for frequently-used operations, such as sending a fax, copying, scanning, Web Connect and Apps services.

   - There are three Shortcuts screens. You can program four shortcuts on each screen.

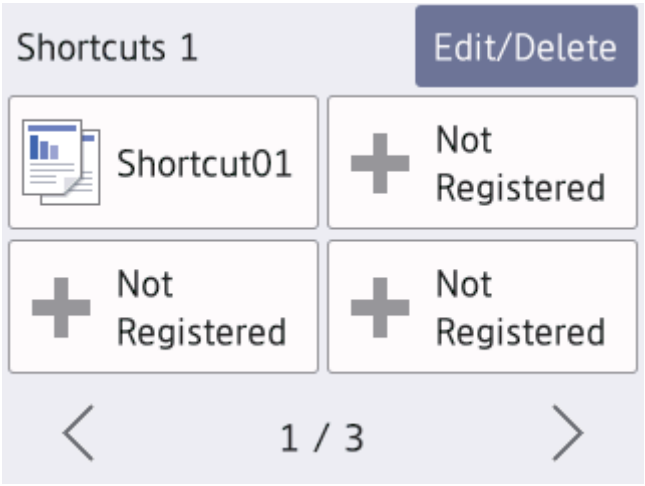

   - To display the other Shortcuts screens, press ◀ or ▶.

4. **Wireless Status**

Each icon in the following table shows the wireless network status:

	Your machine is not connected to the wireless access point/router. Press this button to configure wireless settings. For more detailed information, see the *Quick Setup Guide*.
	Wireless network is connected. A three-level indicator in each of the Home screens displays the current wireless signal strength.
	The wireless access point/router cannot be detected.
	The wireless setting is disabled.

You can configure wireless settings by pressing the Wireless Status button.

5. **[Settings]**

   Press to access the [Settings] menu.

6. **[Ink]**

   Displays the available ink volume. Press to access the [Ink] menu.

   When an ink cartridge is near the end of its life or having a problem, an error icon is displayed on the ink colour.

7. **Modes:**

   Press to switch to each mode.

   [Fax] / [Copy] / [Scan] / [Photo] / [Web] / [Apps] / [Download Software]

8. **Information icon**

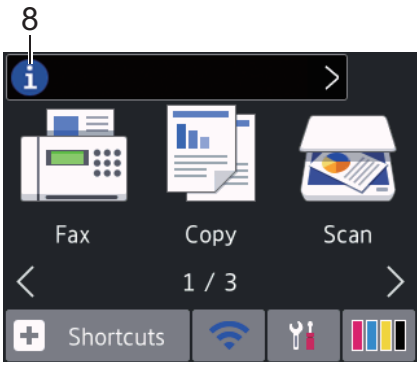

   New information from Brother appears in the information bar when the notification settings such as [Message from Brother] and [Firmware Auto Check] are set to [On].

   (Internet connection is needed, and data rates may apply.)

   Press to view the details.

9. **Warning icon**

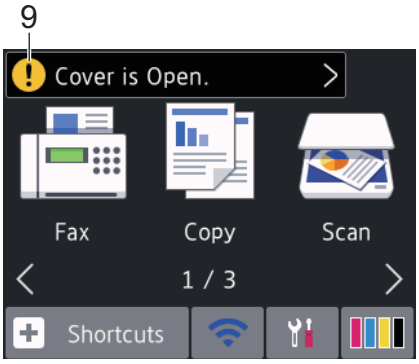

   The warning icon appears when there is an error or maintenance message; press to view the details, and then press to return to the Home screen.

DCP-J772DW

You can switch Home screens by pressing ◀ or ▶.

From the Home screens, you can access Wi-Fi setup, Shortcuts, Ink levels and Setup screens.

Home Screen

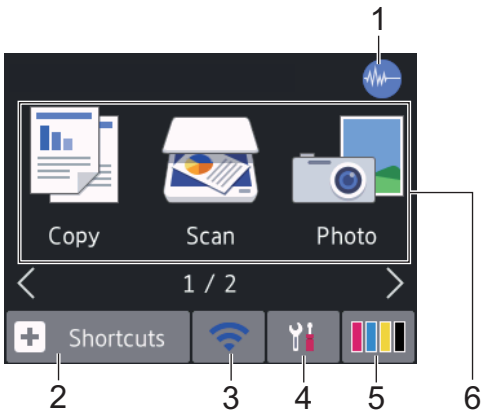

This screen shows the machine's status when the machine is idle. When displayed, it indicates that your machine is ready for the next command.

1. **Quiet Mode**

   This icon appears when the `[Quiet Mode]` setting is set to `[On]`.

   The Quiet Mode setting can reduce printing noise. When Quiet Mode is turned on, the print speed becomes slower.

2. **`[Shortcuts]`**

   Create Shortcuts for frequently-used operations, such as copying, scanning, Web Connect and Apps services.

   - There are three Shortcuts screens. You can program four shortcuts on each screen.

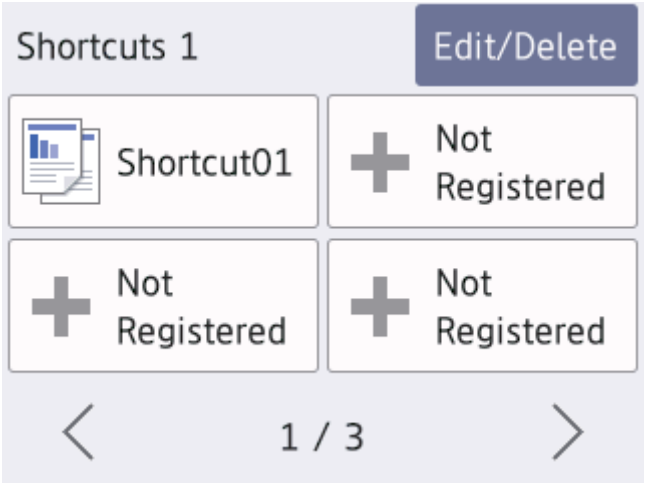

   - To display the other Shortcuts screens, press ◀ or ▶.

3. **Wireless Status**

   Each icon in the following table shows the wireless network status:

WiFi	Your machine is not connected to the wireless access point/router. Press this button to configure wireless settings. For more detailed information, see the *Quick Setup Guide*.
	Wireless network is connected. A three-level indicator in each of the Home screens displays the current wireless signal strength.
	The wireless access point/router cannot be detected.

	The wireless setting is disabled.

You can configure wireless settings by pressing the Wireless Status button.

4. **[Settings]**

   Press to access the [Settings] menu.

5. **[Ink]**

   Displays the available ink volume. Press to access the [Ink] menu.

   When an ink cartridge is near the end of its life or having a problem, an error icon is displayed on the ink colour.

6. **Modes:**

   Press to switch to each mode.

   [Copy] / [Scan] / [Photo] / [Web] / [Apps] / [Download Software]

7. **Information icon**

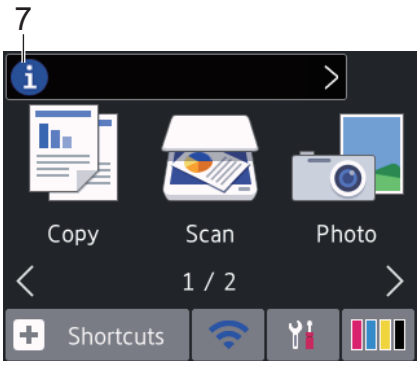

   New information from Brother appears in the information bar when the notification settings such as [Message from Brother] and [Firmware Auto Check] are set to [On].

   (Internet connection is needed, and data rates may apply.)

   Press to view the details.

8. **Warning icon**

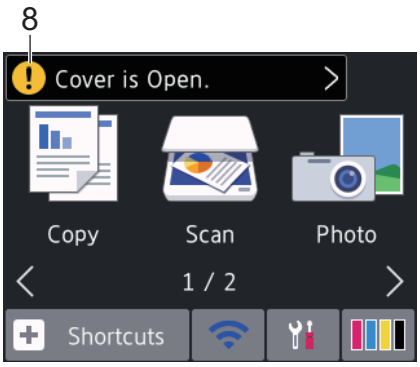

   The warning icon appears when there is an error or maintenance message; press to view the details, and then press to return to the Home screen.

Related Information

- Introduction to Your Brother Machine
- New Information from Brother
- Reduce Printing Noise
- Check the Ink Volume
- Settings Screen Overview

New Information from Brother

Related Models: DCP-J772DW/MFC-J690DW/MFC-J890DW

New information from Brother appears in the information bar when the notification settings such as `[Message from Brother]` and `[Firmware Auto Check]` are set to `[On]`.

Press to view the details.

Internet connection is needed, and data rates may apply.

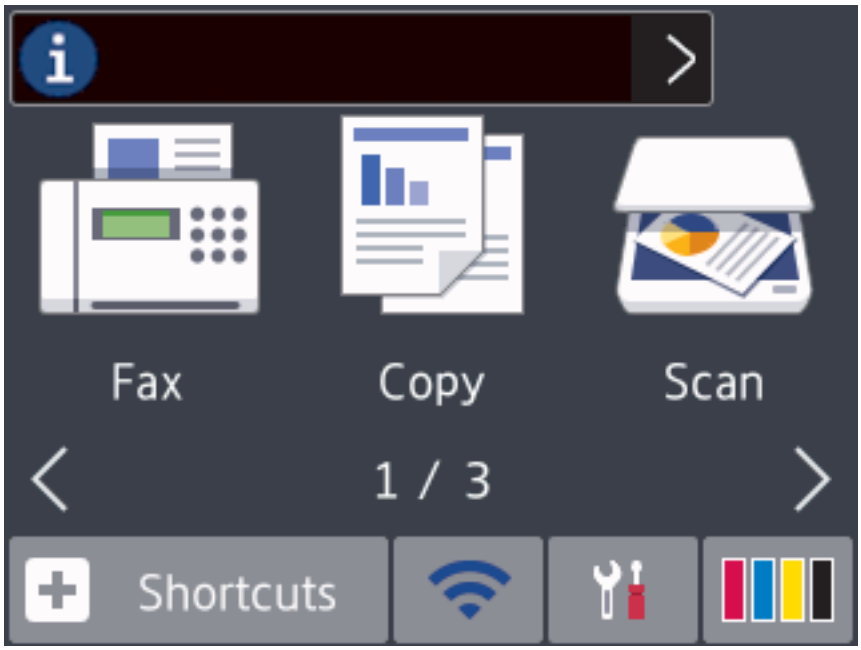

Related Information

- Touchscreen LCD Overview

Settings Screen Overview

Related Models: DCP-J772DW/MFC-J690DW/MFC-J890DW

MFC-J690DW

The touchscreen shows the machine's status when you press [Settings].

Use the Settings menu to access all of your Brother machine's settings.

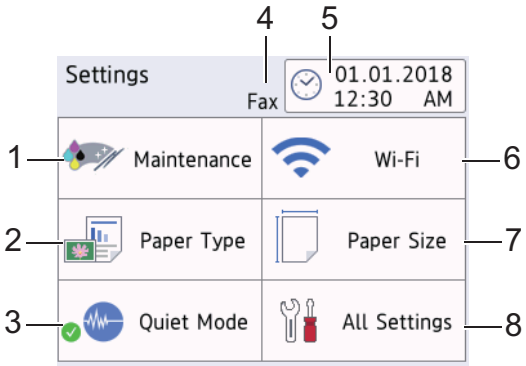

1. **[Maintenance]**

   Press to access the following menus:

   - [Improve Print Quality]
   - [Print Head Cleaning]
   - [Ink Volume]
   - [Ink Cartridge Model]
   - [Print Setting Options]

2. **[Paper Type]**

   Press to access the [Paper Type] menu.

   Use this option to change the paper type.

3. **[Quiet Mode]**

   Displays the Quiet Mode setting.

   Press to access the [Quiet Mode] menu.

   When this menu is set to [On], is displayed on the Home screen.

4. **Receive Mode**

   Displays the current Receive Mode.

5. **[Date & Time]**

   Displays the date and time.

   Press to access the [Date & Time] menu.

6. **[Wi-Fi]**

   Press to set up a wireless network connection.

   If you are using a wireless connection, a three-level indicator on the screen displays the current wireless signal strength.

7. **[Paper Size]**

   Press to access the [Paper Size] menu.

   Use this option to change the paper size.

8. **[All Settings]**

   Press to access a menu of all of your machine's settings.

MFC-J890DW

The touchscreen shows the machine's status when you press [Settings].

Use the Settings menu to access all of your Brother machine's settings.

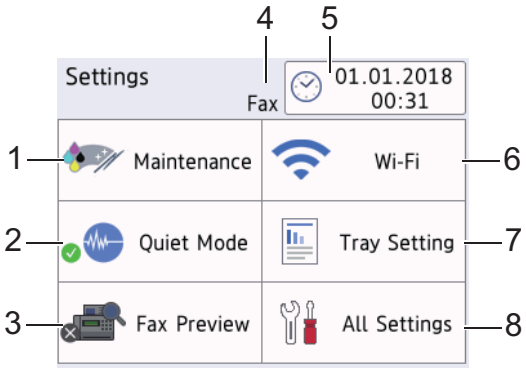

1. **[Maintenance]**

   Press to access the following menus:

   - [Improve Print Quality]
   - [Print Head Cleaning]
   - [Ink Volume]
   - [Ink Cartridge Model]
   - [Print Setting Options]

2. **[Quiet Mode]**

   Displays the Quiet Mode setting.

   Press to access the [Quiet Mode] menu.

   When this menu is set to [On], is displayed on the Home screen.

3. **[Fax Preview]**

   Displays the Fax Preview setting.

   Press to access the [Fax Preview] menu.

4. **Receive Mode**

   Displays the current Receive Mode.

5. **[Date & Time]**

   Displays the date and time.

   Press to access the [Date & Time] menu.

6. **[Wi-Fi]**

   Press to set up a wireless network connection.

   If you are using a wireless connection, a three-level indicator on the screen displays the current wireless signal strength.

7. **[Tray Setting]**

   Press to access the [Tray Setting] menu.

   Use options in the Tray setting menu to change the paper size and type.

8. **[All Settings]**

   Press to access a menu of all of your machine's settings.

DCP-J772DW

The touchscreen shows the machine's status when you press [Settings].

Use the Settings menu to access all of your Brother machine's settings.

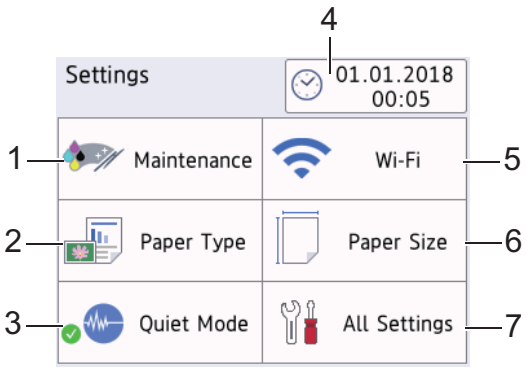

1. **[Maintenance]**

   Press to access the following menus:

   - [Improve Print Quality]
   - [Print Head Cleaning]
   - [Ink Volume]
   - [Ink Cartridge Model]
   - [Print Setting Options]

2. **[Paper Type]**

   Press to access the [Paper Type] menu.

   Use this option to change the paper type.

3. **[Quiet Mode]**

   Displays the Quiet Mode setting.

   Press to access the [Quiet Mode] menu.

   When this menu is set to [On], is displayed on the Home screen.

4. **[Date & Time]**

   Displays the date and time.

   Press to access the [Date & Time] menu.

5. **[Wi-Fi]**

   Press to set up a wireless network connection.

   If you are using a wireless connection, a three-level indicator on the screen displays the current wireless signal strength.

6. **[Paper Size]**

   Press to access the [Paper Size] menu.

   Use this option to change the paper type.

7. **[All Settings]**

   Press to access a menu of all of your machine's settings.

Related Information

- Introduction to Your Brother Machine
- Touchscreen LCD Overview
- Check the Ink Volume
- Distinctive Ring

Navigate the Touchscreen

Related Models: DCP-J772DW/MFC-J690DW/MFC-J890DW

Press your finger on the LCD to operate it. To display and access all the options, press ◄► or ▲▼ on the LCD to scroll through them.

NOTE

- This product adopts the font of ARPHIC TECHNOLOGY CO., LTD.

Related Information

- Introduction to Your Brother Machine

Access Brother Utilities (Windows)

Brother Utilities is an application launcher that offers convenient access to all Brother applications installed on your computer.

1. Do one of the following:
   - Windows 7

     Click **(Start)** > **All Programs** > **Brother** > **Brother Utilities**.
   - Windows 8

     Tap or click **(Brother Utilities)** either on the **Start** screen or the desktop.
   - Windows 8.1

     Move your mouse to the lower left corner of the **Start** screen and click (if using a touch-based device, swipe up from the bottom of the **Start** screen to bring up the **Apps** screen).

     When the **Apps** screen appears, tap or click **(Brother Utilities)**.
   - Windows 10

     Click > **Brother** > **Brother Utilities**.
2. Select your machine.

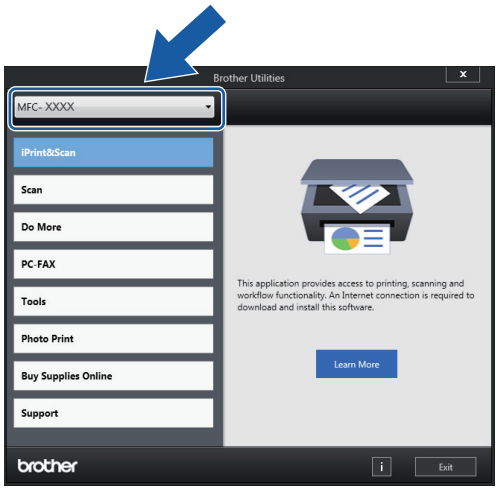

3. Select the operation you want to use.

Related Information

- Introduction to Your Brother Machine
- Uninstall the Brother Software and Drivers (Windows)

Uninstall the Brother Software and Drivers (Windows)

1. Do one of the following:
   - Windows 7

     Click **(Start)** > **All Programs** > **Brother** > **Brother Utilities**.
   - Windows 8

     Tap or click (**Brother Utilities**) either on the **Start** screen or the desktop.
   - Windows 8.1

     Move your mouse to the lower left corner of the **Start** screen and click (if using a touch-based device, swipe up from the bottom of the **Start** screen to bring up the **Apps** screen).

     When the **Apps** screen appears, tap or click (**Brother Utilities**).
   - Windows 10

     Click > **Brother** > **Brother Utilities**.
2. Select your model from the drop-down list (if it is not already selected).
3. Click **Tools** in the left navigation bar.
   - If the **Software Update Notification** icon is visible, select it, and then click **Check now** > **Check for Software Updates** > **Update**. Follow the on-screen instructions.
   - If the **Software Update Notification** icon is not visible, go to the next step.
4. Click **Uninstall** in the **Tools** section of **Brother Utilities**.

   Follow the instructions in the dialog box to uninstall the software and drivers.

Related Information

- Access Brother Utilities (Windows)

Paper Handling

- Load Paper
- Load Documents

Load Paper

- Load Paper in the Paper Tray
- Load Photo or Photo L Paper in Photo Paper Tray
- Load Paper in the Manual Feed Slot
- Unprintable Area
- Paper Settings
- Acceptable Paper and Other Print Media
- Error and Maintenance Messages
- Paper Handling and Printing Problems

Load Paper in the Paper Tray

- Load Cut-Sheet Paper or Photo 2L Paper in the Paper Tray
- Load Legal Size Paper in the Paper Tray
- Load Photo Paper in the Paper Tray
- Load Envelopes in the Paper Tray

Load Cut-Sheet Paper or Photo 2L Paper in the Paper Tray

- If the [Check Paper] setting is set to [On] and you pull the paper tray out of the machine, a message appears on the LCD asking if you want to change the paper type and paper size. Change the Paper Size and Paper Type settings if needed, following the LCD instructions.
- Load only one size and type of paper in the paper tray at a time.
- When you load a different paper size in the tray, you must change the Paper Size setting in the machine or the paper size setting on your computer.

1. If the paper support flap (1) is open, close it, and then close the paper support (2).

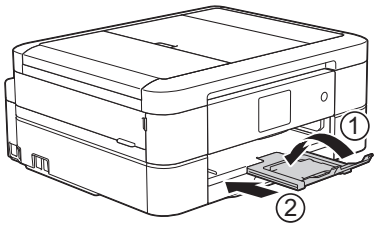

2. Pull the paper tray completely out of the machine.

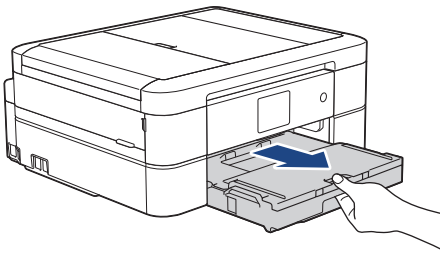

3. Open the output paper tray cover (1).

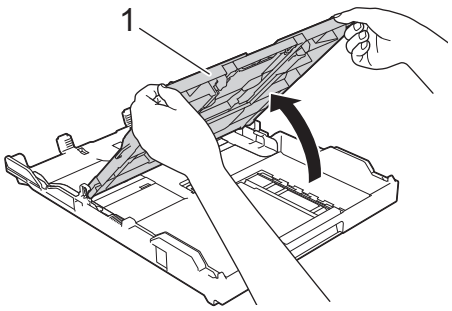

4. Gently press and slide the paper width guides (1) and then the paper length guide (2) to fit the paper size.

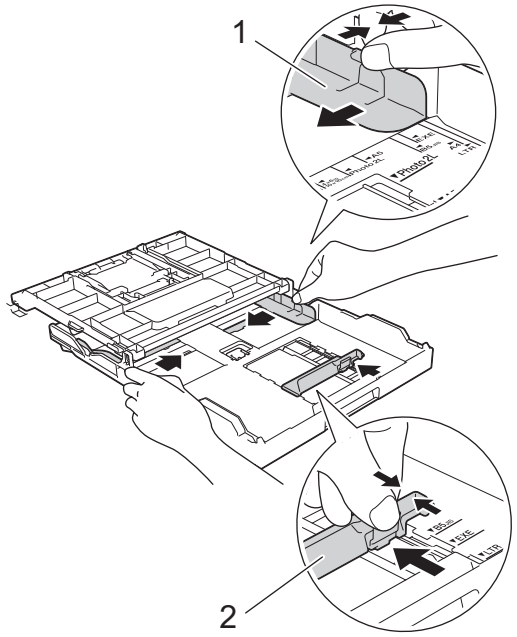

5. Fan the stack of paper well to avoid paper jams and misfeeds.

Always make sure the paper is not curled or wrinkled.

6. Gently load paper in the paper tray with the printing surface **face down**.

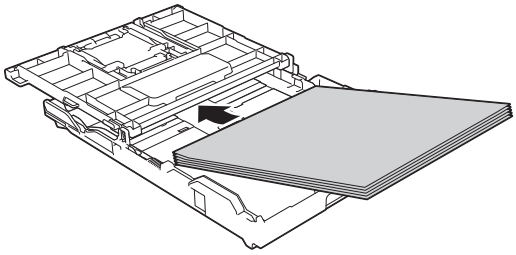

Make sure the paper is flat in the tray and the paper length guide (1) touches the edges of the paper.

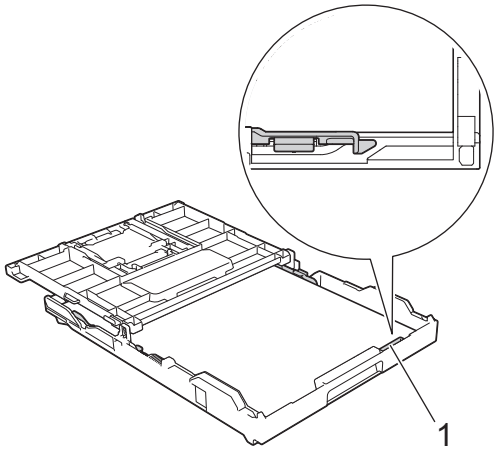

IMPORTANT

- Be careful not to push the paper in too far; it may lift at the back of the tray and cause paper feed problems.
- Loading more than 20 sheets of Photo 2L (13 x 18 cm) paper may cause paper jams.

To add paper before the tray is empty, remove the paper from the tray and combine it with the paper you are adding. Always fan the stack of paper well to prevent the machine from feeding multiple pages.

7. Gently adjust the paper width guides (1) to fit the paper.

   Make sure the paper width guides touch the edges of the paper.

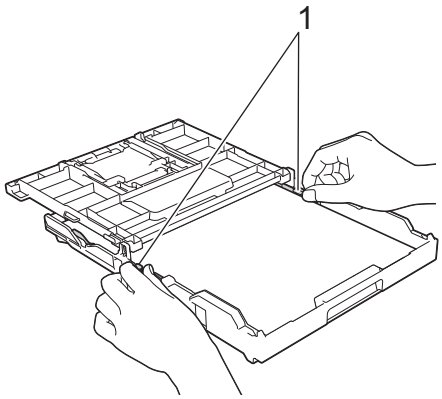

8. Close the output paper tray cover.

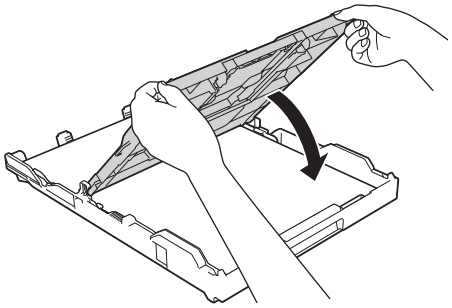

9. Slowly push the paper tray completely into the machine.

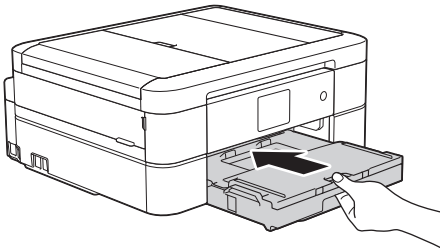

10. Pull out the paper support (1) until it locks into place, and then unfold the paper support flap (2).

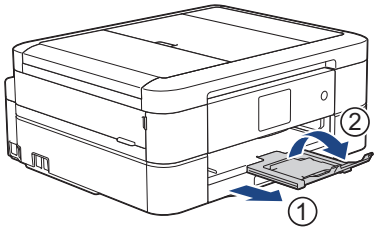

Related Information

- Load Paper in the Paper Tray

- Change the Check Paper Size Setting
- Choose the Right Print Media
- Change the Paper Size and Paper Type

Load Legal Size Paper in the Paper Tray

- If the [Check Paper] setting is set to [On] and you pull the paper tray out of the machine, a message appears on the LCD asking if you want to change the paper type and paper size. Change the Paper Size and Paper Type settings if needed, following the LCD instructions.
- Load only one size and type of paper in the paper tray at a time.
- When you load a different paper size in the tray, you must change the Paper Size setting in the machine or the paper size setting on your computer.

This operation is available only for some countries.

1. If the paper support flap (1) is open, close it, and then close the paper support (2).

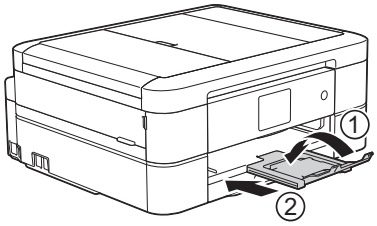

2. Pull the paper tray completely out of the machine.

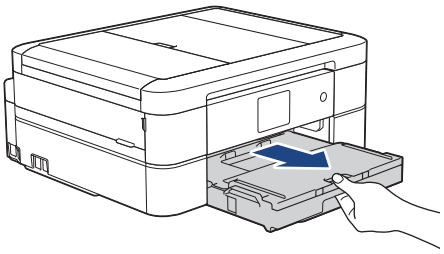

3. Open the output paper tray cover (1).

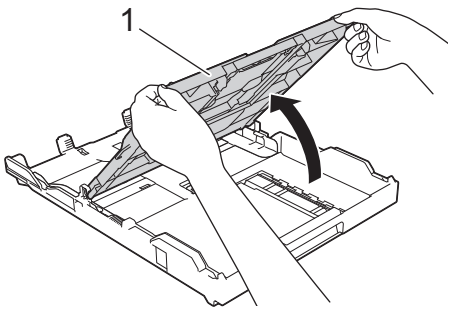

4. Press the square paper tray expansion button (1) and slide out the paper tray until the square paper tray expansion button locks into the square LGL hole.

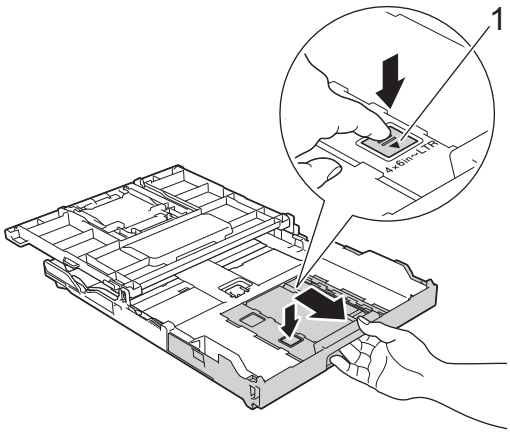

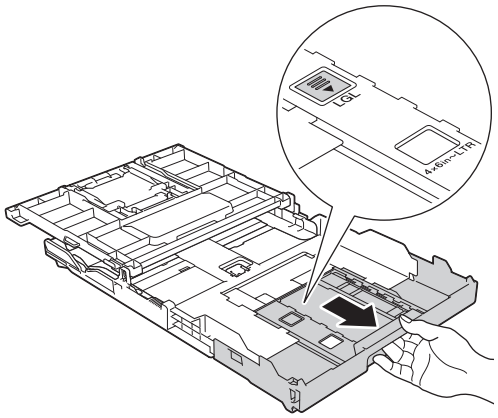

5. Gently press and slide the paper width guides (1) and the paper length guide (2) to fit the paper size.

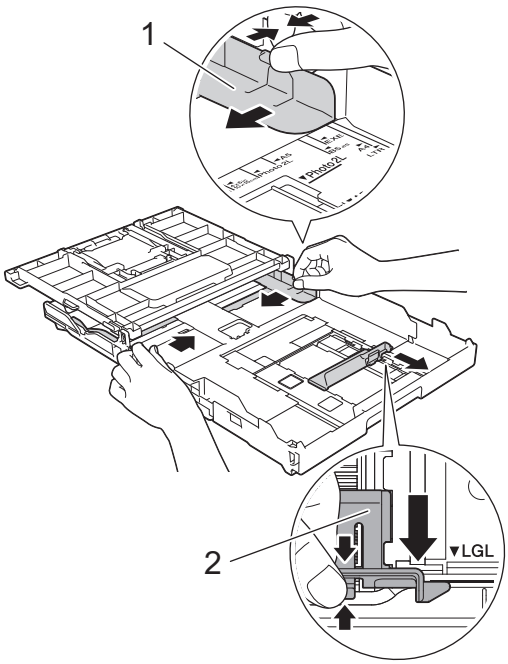

6. Fan the stack of paper well to avoid paper jams and misfeeds.

Always make sure the paper is not curled or wrinkled.

7. Gently load paper in the paper tray with the printing surface **face down**.

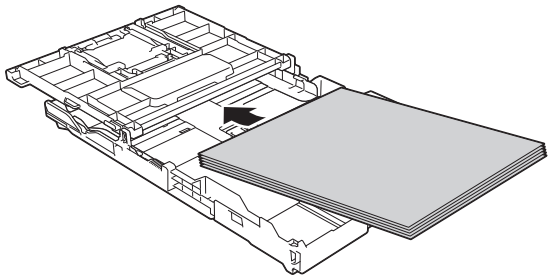

Make sure the paper is flat in the tray and the paper length guide (1) touches the edges of the paper.

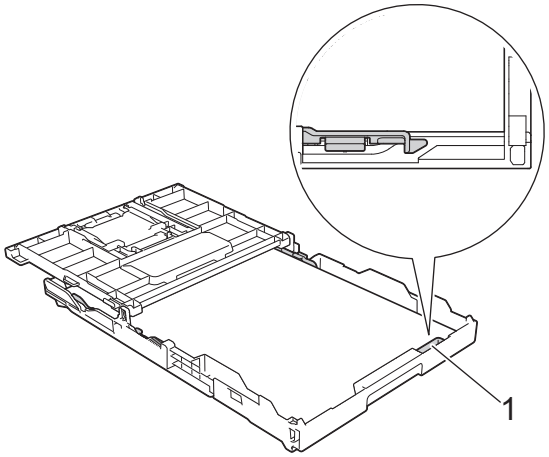

IMPORTANT

Be careful not to push the paper in too far; it may lift at the back of the tray and cause paper feed problems.

To add paper before the tray is empty, remove the paper from the tray and combine it with the paper you are adding. Always fan the stack of paper well to prevent the machine from feeding multiple pages.

8. Gently adjust the paper width guides to fit the paper.

   Make sure the paper guides touch the edges of the paper.

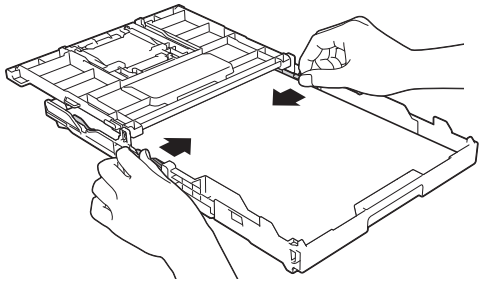

9. Close the output paper tray cover.

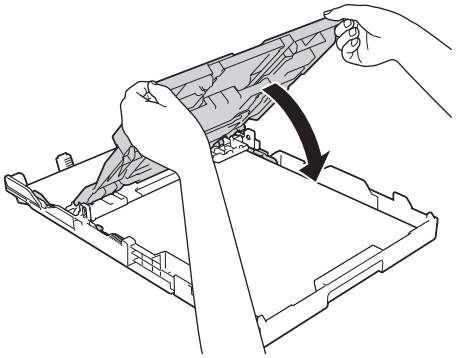

10. Slowly push the paper tray completely into the machine.

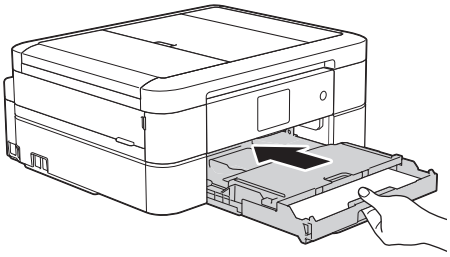

11. Pull out the paper support (1) until it locks into place, and then unfold the paper support flap (2).

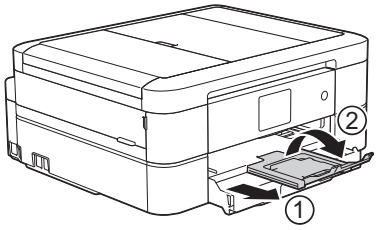

Related Information

- Load Paper in the Paper Tray

Load Photo Paper in the Paper Tray

- If the [Check Paper] setting is set to [On] and you pull the paper tray out of the machine, a message appears on the LCD asking if you want to change the paper type and paper size. Change the Paper Size and Paper Type settings if needed, following the LCD instructions.
- Load only one size and type of paper in the paper tray at a time.
- When you load a different paper size in the tray, you must change the Paper Size setting in the machine or the paper size setting on your computer.

1. If the paper support flap (1) is open, close it, and then close the paper support (2).

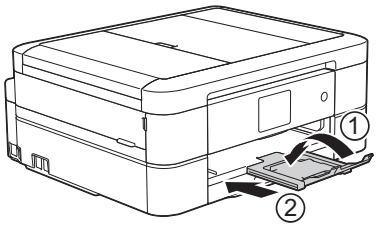

2. Pull the paper tray completely out of the machine.

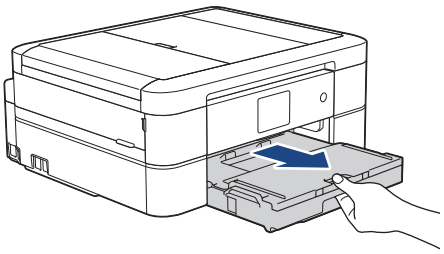

3. Open the output paper tray cover (1).

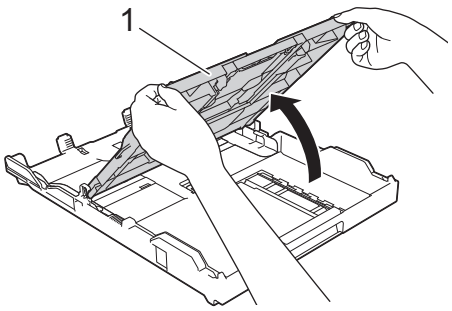

4. Gently press and slide the paper width guides (1) to fit the paper size, and then lift up the stopper (2).

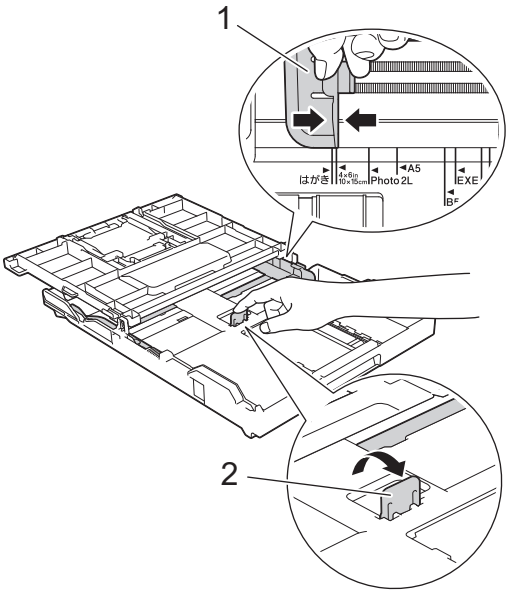

5. Close the output paper tray cover.

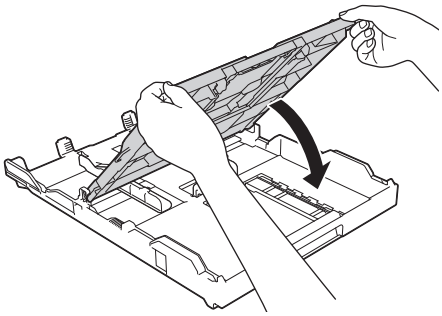

6. Load up to 20 sheets of photo paper with the printing surface **face down**.
   Loading more than 20 sheets of photo paper may cause paper jams.

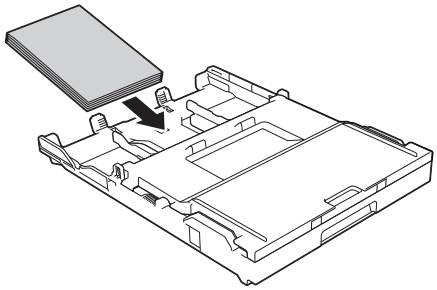

7. Gently adjust the paper width guides (1) to fit the paper.
   Make sure the paper width guides touch the edges of the paper and the paper is flat in the tray.

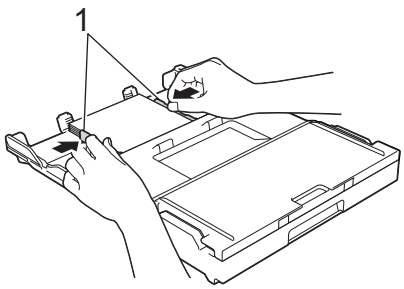

8. Slowly push the paper tray completely into the machine.

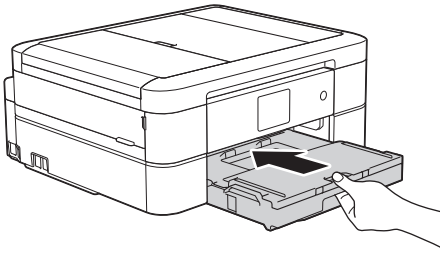

9. Pull out the paper support (1) until it locks into place, and then unfold the paper support flap (2).

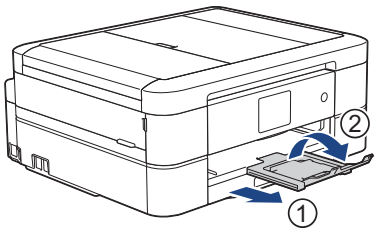

Related Information

- Load Paper in the Paper Tray
- Change the Check Paper Size Setting
- Choose the Right Print Media
- Change the Paper Size and Paper Type

Load Envelopes in the Paper Tray

- If the [Check Paper] setting is set to [On] and you pull the paper tray out of the machine, a message appears on the LCD asking if you want to change the paper type and paper size. Change the Paper Size and Paper Type settings if needed, following the LCD instructions.
- Load only one size and type of paper in the paper tray at a time.
- When you load a different paper size in the tray, you must change the Paper Size setting in the machine or the paper size setting on your computer.
- Before loading envelopes in the tray, press the corners and sides of the envelopes to make them as flat as possible.

  See *Related Information*: *About Envelopes*.

1. If the paper support flap (1) is open, close it, and then close the paper support (2).

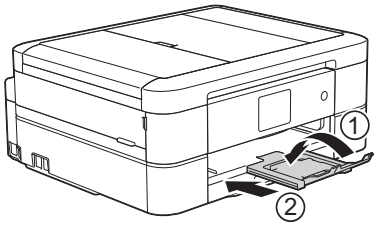

2. Pull the paper tray completely out of the machine.

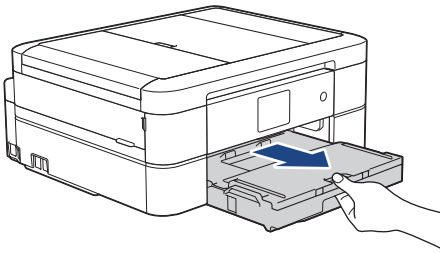

3. Open the output paper tray cover (1).

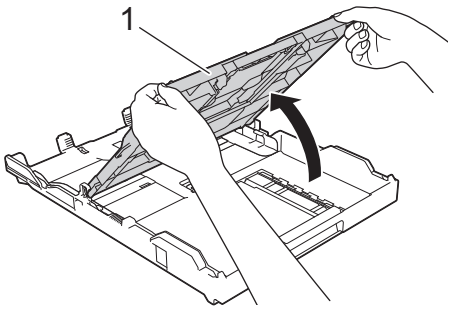

4. Load up to 10 envelopes in the paper tray with the printing surface **face down**. Loading more than 10 envelopes may cause paper jams.

   If the envelope flaps are on the long edge, load the envelopes with the flap on the left, as shown in the illustration. Gently press and slide the paper width guides (1) and paper length guide (2) to fit the size of the envelopes.

   Make sure the envelopes are flat in the tray.

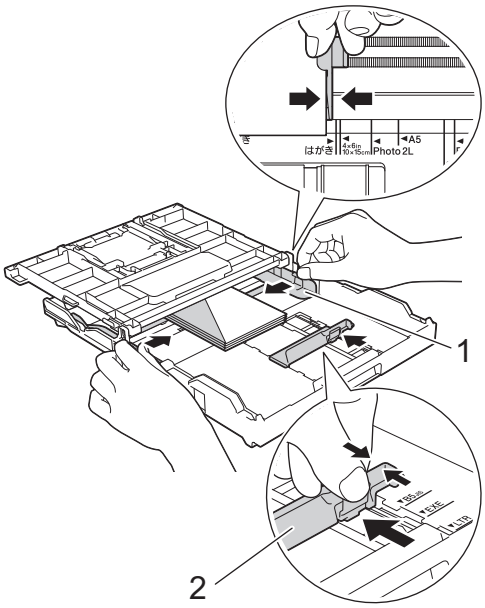

IMPORTANT

If envelopes are "double-feeding," load one envelope in the paper tray at a time.

5. Close the output paper tray cover.

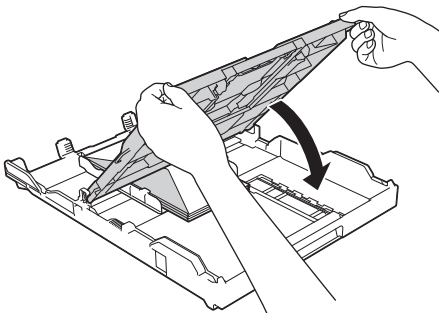

6. Slowly push the paper tray completely into the machine.

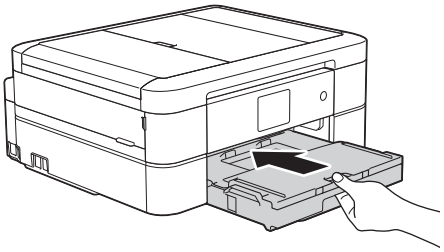

7. Pull out the paper support (1) until it locks into place, and then unfold the paper support flap (2).

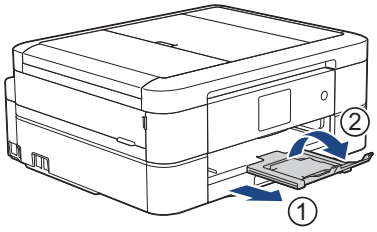

Related Information

- Load Paper in the Paper Tray
- About Envelopes
- Change the Check Paper Size Setting

- Choose the Right Print Media
- Change the Paper Size and Paper Type

Load Photo or Photo L Paper in Photo Paper Tray

Related Models: DCP-J572DW/DCP-J772DW/MFC-J690DW

Use the photo paper tray, which is located on the top of the output paper tray cover, to print on Photo (10 x 15 cm) or Photo L (89 x 127 mm) size paper.

- When you use the photo paper tray, you do not have to remove the paper from the tray beneath it.

- If the [Check Paper] setting is set to [On] and you pull the paper tray out of the machine, a message appears on the LCD asking if you want to change the paper type and paper size. Change the Paper Size and Paper Type settings if needed, following the LCD instructions.
- Load only one size and type of paper in the paper tray at a time.
- When you load a different paper size in the tray, you must change the Paper Size setting in the machine or the paper size setting on your computer.

1. If the paper support flap (1) is open, close it, and then close the paper support (2).

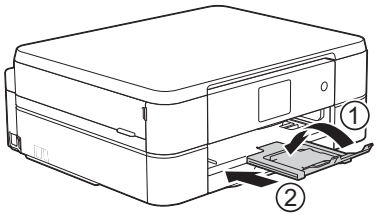

2. Pull the paper tray completely out of the machine.

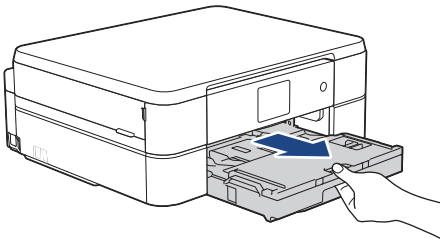

3. Press the blue photo paper tray release button (1) and slide the whole output paper tray cover forward until it locks into the photo printing position (2).

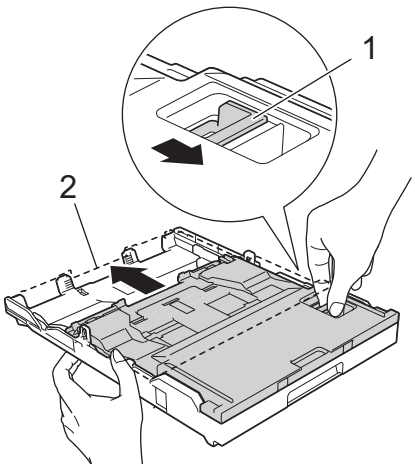

4. Load up to 20 sheets of Photo or Photo L paper in the photo paper tray with the printing surface **face down**.
   Loading more than 20 sheets of photo paper may cause paper jams.

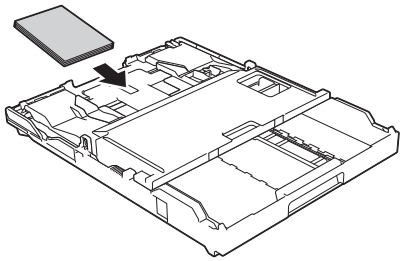

5. Gently adjust the paper width guides (1) to fit the paper. Make sure the paper width guides touch the edges of the paper and the paper is flat in the tray.

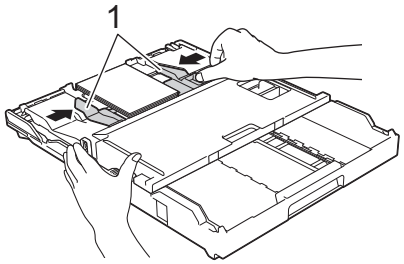

6. Slowly push the paper tray completely into the machine.

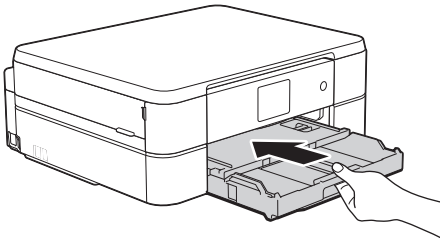

Do not open the paper support and the paper support flap when using the photo paper tray. Otherwise it is difficult to take out the printouts.

IMPORTANT

When you have finished printing photos, return the photo paper tray to the Normal printing position. If you do not, you will get a `[No Paper Fed]` error when you use cut sheet paper.

Photo Paper Tray in the Normal printing position

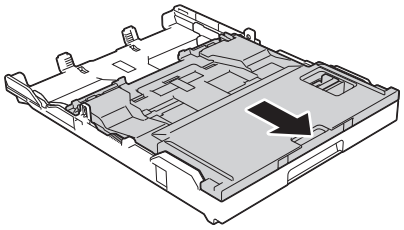

Photo Paper Tray in the Photo printing position

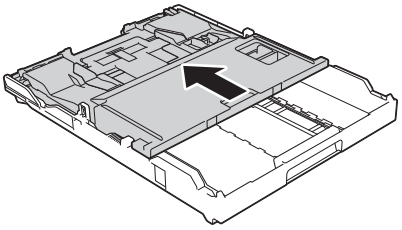

Related Information

- Load Paper
- Paper Handling and Printing Problems

Load Paper in the Manual Feed Slot

Related Models: DCP-J572DW/DCP-J772DW/MFC-J690DW/MFC-J890DW

Load special print media in this slot, one sheet at a time.

NOTE

To prevent dust from entering the machine, be sure to close the cover if you are not using the manual feed slot.

The machine automatically turns on Manual Feed mode when you put paper in the manual feed slot.

1. Open the manual feed slot cover.

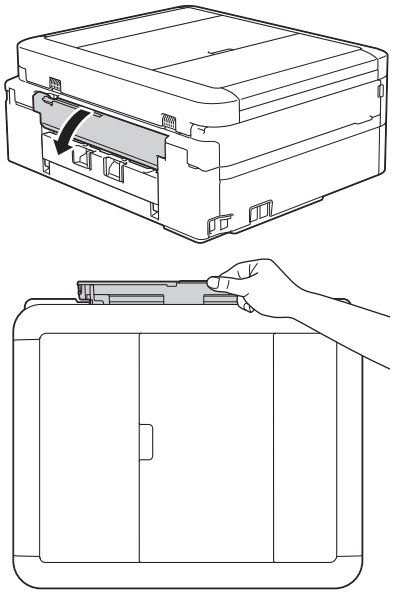

2. Lift up the paper support.

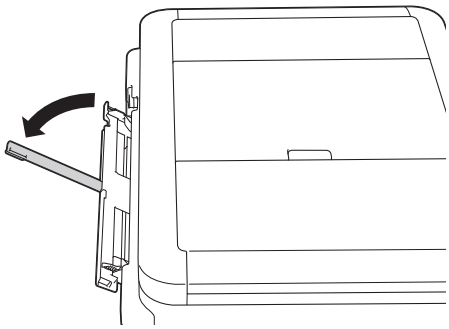

3. Slide the manual feed slot paper guides to fit the width of the paper you are using.

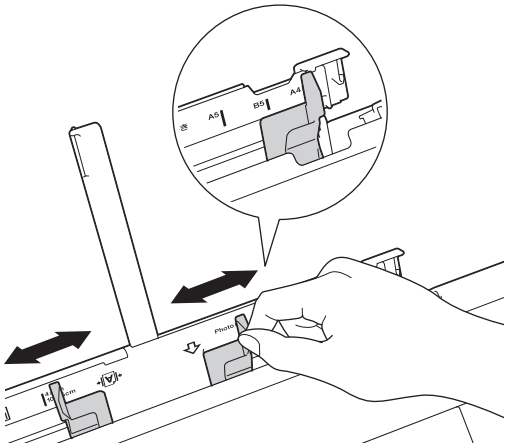

4. Load only one sheet of paper in the manual feed slot with the printing surface **face up**.

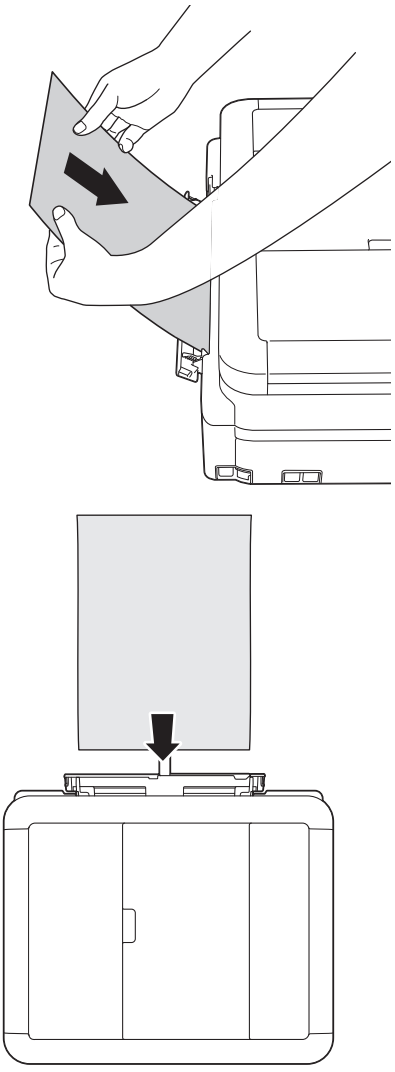

When using envelopes, load the envelopes with the printing surface **face up** and the flap on the left as shown in the illustration.

See *Related Information*.

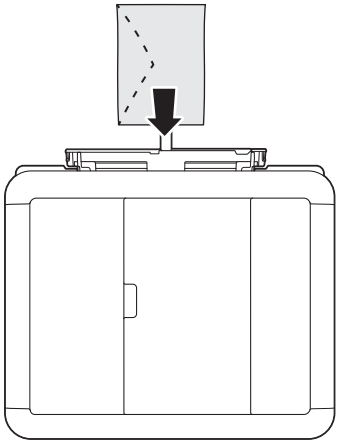

IMPORTANT

- DO NOT load more than one sheet of paper in the manual feed slot at any time. Doing this may cause a paper jam. When printing multiple pages, do not feed the next sheet of paper until the LCD displays a message instructing you to feed the next sheet.
- DO NOT load paper in the manual feed slot when you are printing from the paper tray. Doing this may cause a paper jam.

5. Using both hands, push one sheet of paper into the manual feed slot until the front edge touches the paper feed rollers. Let go of the paper when you hear the machine pull it. The LCD displays `[Manual Feed Slot ready.]`. Read the instruction displayed on the LCD, and then press `[OK]`.

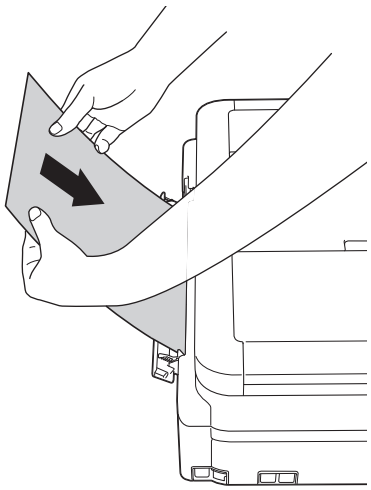

When loading an envelope, or a sheet of thick paper, push the envelope into the manual feed slot until you feel the paper feed rollers grab it.

6. Pull out the paper support (1) until it locks into place, and then unfold the paper support flap (2).

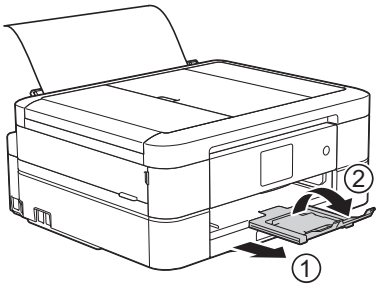

- If the document does not fit on one sheet, the machine will prompt you to load another sheet of paper. Place another sheet of paper in the manual feed slot, and then press [OK] on the machine's control panel.
- Make sure printing has finished before you close the manual feed slot cover.
- When paper is placed in the manual feed slot, the machine always prints from the manual feed slot.
- The machine will eject paper loaded in the manual feed slot while a test page, fax, or report is being printed.
- The machine will eject paper loaded in the manual feed slot during the machine's cleaning process. Wait until the machine finishes its cleaning, and then load paper in the manual feed slot.

Related Information

- Load Paper
- About Envelopes
- Choose the Right Print Media
- Error and Maintenance Messages

Unprintable Area

The unprintable area depends on the settings in the application you are using. The figures below show the unprintable areas on cut-sheet paper and envelopes. The machine can print in the shaded areas of cut-sheet paper only when the Borderless print feature is available and turned on.

Cut-Sheet Paper

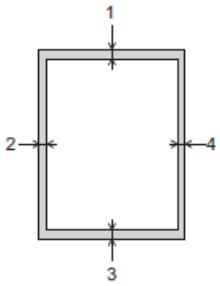

Envelopes

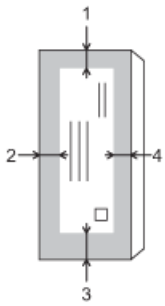

	Top (1)	Left (2)	Bottom (3)	Right (4)
Cut-Sheet	3 mm	3 mm	3 mm	3 mm
Envelopes	12 mm	3 mm	12 mm	3 mm

The Borderless print feature is not available for envelopes and 2-sided printing.

Related Information

- Load Paper
- Paper Handling and Printing Problems

Paper Settings

- Change the Paper Size and Paper Type
- Change the Check Paper Size Setting
- Shrink Page Size of an Oversized Incoming Fax

Change the Paper Size and Paper Type

Set the Paper Size and Paper Type settings for the paper tray.

- To get the best print quality, set the machine for the type of paper you are using.
- When you change the size of the paper you load in the tray, you must change the Paper Size setting on the LCD at the same time.

>> DCP-J572DW/MFC-J491DW
>> DCP-J772DW/MFC-J690DW/MFC-J890DW

DCP-J572DW/MFC-J491DW

1. Press **Settings**.
2. Press ▲ or ▼ to select the following:
   a. Select `[General Setup]`. Press **OK**.
   b. Select `[Paper Type]`. Press **OK**.
   c. Select `[Plain Paper]`, `[Inkjet Paper]`, `[Brother BP71]` or `[Other Glossy]`. Press **OK**.
   d. Select `[Paper Size]`. Press **OK**.
   e. Select the paper size option you want, and then press **OK**.
3. Press **Stop/Exit**.

The machine ejects paper with the printed surface face up onto the paper tray at the front of the machine. When you use glossy paper, remove each sheet at once to prevent smudging or paper jams.

DCP-J772DW/MFC-J690DW/MFC-J890DW

1. (MFC-J890DW) Press `[Settings]` > `[Tray Setting]`.
2. (DCP-J772DW/MFC-J690DW) Press `[Settings]`.
3. Press `[Paper Type]`.
4. Press ▲ or ▼ to display the paper type options, and then press the option you want.
5. Press `[Paper Size]`.
6. Press ▲ or ▼ to display the paper size options, and then press the option you want.
7. Press .

The machine ejects paper with the printed surface face up onto the paper tray at the front of the machine. When you use glossy paper, remove each sheet at once to prevent smudging or paper jams.

Related Information

- Paper Settings
- Load Cut-Sheet Paper or Photo 2L Paper in the Paper Tray
- Load Photo Paper in the Paper Tray
- Load Envelopes in the Paper Tray
- Acceptable Paper and Other Print Media
- Error and Maintenance Messages
- Paper Handling and Printing Problems

Change the Check Paper Size Setting

If this setting is set to [On] and you pull the paper tray out of the machine, the LCD displays a message asking if you want to change the Paper Size and Paper Type settings.

The default setting is [On].

>> DCP-J572DW/MFC-J491DW
>> DCP-J772DW/MFC-J690DW/MFC-J890DW

DCP-J572DW/MFC-J491DW

1. Press **Settings**.
2. Press ▲ or ▼ to select the following:
   a. Select [General Setup]. Press **OK**.
   b. Select [Tray Setting]. Press **OK**.
   c. Select [Check Paper]. Press **OK**.
   d. Select [On] or [Off]. Press **OK**.
3. Press **Stop/Exit**.

DCP-J772DW/MFC-J690DW/MFC-J890DW

1. Press [Settings] > [All Settings] > [General Setup].
2. Press ▲ or ▼ to display the [Check Paper] option, and then press it.
3. Press [On] or [Off].
4. Press .

Related Information

- Paper Settings
- Load Cut-Sheet Paper or Photo 2L Paper in the Paper Tray
- Load Photo Paper in the Paper Tray
- Load Envelopes in the Paper Tray
- Error and Maintenance Messages

Acceptable Paper and Other Print Media

The print quality can be affected by the type of paper you use in the machine.

To get the best print quality for the settings you have selected, always set the Paper Type to match the type of paper you load.

You can use plain paper, inkjet paper (coated paper), glossy paper, recycled paper and envelopes.

We recommend testing various paper types before buying large quantities.

For best results, use Brother paper.

- When you print on inkjet paper (coated paper) and glossy paper, be sure to select the correct print media in the **Basic** tab of the printer driver or in the Paper Type setting on the machine.
- When you print on Brother Photo paper, load one extra sheet of the same photo paper in the paper tray.
- When using photo paper, remove each sheet at once to prevent smudging or paper jams.
- Avoid touching the printed surface of the paper immediately after printing; the surface may not be completely dry and may stain your fingers.

Related Information

- Load Paper
- Recommended Print Media
- Handle and Use Print Media
- About Envelopes
- Choose the Right Print Media
- Change the Paper Size and Paper Type
- Paper Handling and Printing Problems

Recommended Print Media

For the best print quality, we recommend using the Brother paper listed in the table.

If Brother paper is not available in your country, we recommend testing various paper types before purchasing large quantities.

Brother paper

Paper Type	Item
A4 Plain	BP60PA
A4 Glossy Photo	BP71GA4
A4 Inkjet (Matte)	BP60MA
10 x 15 cm Glossy Photo	BP71GP

Related Information

- Acceptable Paper and Other Print Media

Handle and Use Print Media

- Store paper in its original packaging and keep it sealed. Keep the paper flat and away from moisture, direct sunlight and heat.
- Avoid touching the shiny (coated) side of photo paper.

IMPORTANT

DO NOT use the following kinds of paper:

- Damaged, curled, wrinkled, or irregularly shaped

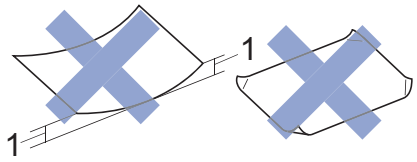

1. **2 mm or greater curl may cause jams to occur.**

- Extremely shiny or highly textured
- Paper that cannot be arranged uniformly when stacked
- Paper made with a short grain

Related Information

- Acceptable Paper and Other Print Media

About Envelopes

- Use envelopes that weigh from 80 to 95 gsm.
- Some envelope sizes require that you set margins in the application. Make sure you do a test print first before printing many envelopes.

IMPORTANT

DO NOT use envelopes that:

- Are loosely constructed
- Have windows
- Are embossed (have raised writing on them)
- Have clasps or staples
- Are pre-printed on the inside
- Are self-adhesive
- Have double flaps

Self-adhesive	Double flaps

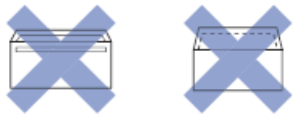

You may experience paper feed problems caused by the thickness, size and flap shape of the envelopes you are using.

- Before loading envelopes in the tray, press the flaps, edges and corners to make them as flat as possible, as shown in the illustrations.

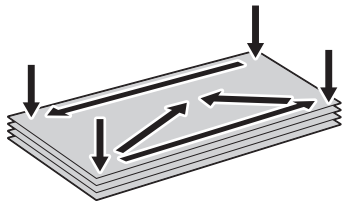

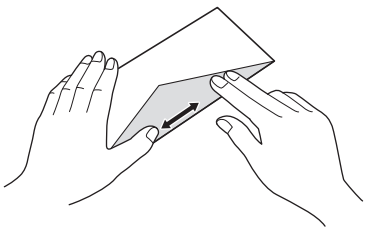

Fan the stack of envelopes well to avoid paper jams and misfeeds.

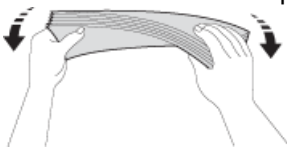

IMPORTANT

If envelopes are "double-feeding," load one envelope in the paper tray at a time.

Related Information

- Acceptable Paper and Other Print Media

- Load Envelopes in the Paper Tray
- Load Paper in the Manual Feed Slot

Choose the Right Print Media

- Paper Type and Paper Size for Each Operation
- Paper Capacity of the Paper Trays
- Paper Weight and Thickness
- Load Cut-Sheet Paper or Photo 2L Paper in the Paper Tray
- Load Photo Paper in the Paper Tray
- Load Envelopes in the Paper Tray
- Load Paper in the Manual Feed Slot

Paper Type and Paper Size for Each Operation

Paper Type	Paper Size		Usage			
			Fax [1]	Copy	Photo Capture [2]	Printer
Cut-Sheet	A4	210 x 297 mm	Yes	Yes	Yes	Yes
	Letter	215.9 x 279.4 mm	Yes	Yes	Yes	Yes
	Legal [3]	215.9 x 355.6 mm	Yes	Yes	-	Yes
	Executive	184.1 x 266.7 mm	-	-	-	Yes
	JIS B5 [4]	182 x 257 mm	-	-	-	Yes
	JIS B6 [4]	128 x 182 mm	-	-	-	Yes
	A5	148 x 210 mm	-	Yes	-	Yes
	A6	105 x 148 mm	-	-	-	Yes
Cards	Photo	10 x 15 cm	-	Yes	Yes	Yes
	Photo L	9 x 13 cm	-	-	-	Yes
	Photo 2L	13 x 18 cm	-	-	Yes	Yes
	Index Card	13 x 20 cm	-	-	-	Yes
Envelopes	C5 Envelope	162 x 229 mm	-	-	-	Yes
	DL Envelope	110 x 220 mm	-	-	-	Yes
	Com-10	104.7 x 241.3 mm	-	-	-	Yes
	Monarch	98.4 x 190.5 mm	-	-	-	Yes

1 MFC models only

2 DCP-J572DW/DCP-J772DW/MFC-J690DW/MFC-J890DW only

3 Supported only in some countries.

4 Supported only in some countries.

Related Information

- Choose the Right Print Media

Paper Capacity of the Paper Trays

	Paper Size [1]	Paper Types	No. of sheets
Paper Tray	Letter, A4, Legal, Executive, B5 (JIS), A5, B6 (JIS), A6, Envelopes (C5, Com-10, DL, Monarch), Photo (10 x 15 cm), Photo 2L (13 x 18 cm), Index card (13 x 20 cm)	Plain Paper, Recycled Paper	(MFC-J890DW) 150 [2] (DCP-J572DW/ DCP-J772DW/ MFC-J491DW/ MFC-J690DW) 100 [2]
		Inkjet Paper	20
		Glossy Paper, Photo	20
		Index Card	50
		Envelopes	10
Photo Paper Tray (DCP-J572DW/ DCP-J772DW/ MFC-J690DW)	Photo (10 x 15 cm) and Photo L (9 x 13 cm)	Plain Paper, Inkjet Paper, Glossy Paper, Recycled Paper and Photo	20
Manual Feed Slot (DCP-J572DW/ DCP-J772DW/ MFC-J690DW/ MFC-J890DW)	Letter, A4, Legal, Executive, B5 (JIS), A5, B6 (JIS), A6, Envelopes (C5, Com-10, DL, Monarch), Photo (10 x 15 cm), Photo L (9 x 13 cm), Photo 2L (13 x 18 cm), Index card (13 x 20 cm)	Plain Paper, Inkjet Paper, Glossy Paper, Recycled Paper, Photo and Envelopes	1

1 Legal, JIS B5 and B6 size paper are supported only in some countries.

2 When using plain paper 80 gsm

Related Information

- Choose the Right Print Media

Paper Weight and Thickness

Paper Type		Weight	Thickness
Cut-Sheet	Plain Paper, Recycled Paper	64 to 120 gsm	0.08 to 0.15 mm
	Inkjet Paper	64 to 200 gsm	0.08 to 0.25 mm
	Glossy Paper [1] [2]	Up to 220 gsm	Up to 0.25 mm
Cards	Photo Card [1] [2]	Up to 220 gsm	Up to 0.25 mm
	Index Card [2]	Up to 120 gsm	Up to 0.15 mm
Envelopes		80 to 95 gsm	Up to 0.52 mm

1 BP71 260 gsm paper is specially designed for Brother inkjet machines.

2 Up to 300 gsm for Manual Feed Slot (DCP-J572DW/DCP-J772DW/MFC-J690DW/MFC-J890DW)

Related Information

- Choose the Right Print Media
- Paper Handling and Printing Problems

Load Documents

- Load Documents in the Automatic Document Feeder (ADF)
- Load Documents on the Scanner Glass
- Unscannable Area

Load Documents in the Automatic Document Feeder (ADF)

Related Models: MFC-J491DW/MFC-J690DW/MFC-J890DW

The ADF can hold multiple pages and feeds each sheet individually.

Use paper that is within the sizes and weights shown in the table. Always fan the pages before placing them in the ADF.

Document Sizes and Weights

Length [1]:	148 to 355.6 mm
Width:	148 to 215.9 mm
Paper Weight:	64 to 90 gsm

[1] Documents that are longer than 297 mm must be fed one page at a time.

IMPORTANT

- DO NOT pull on the document while it is feeding.
- DO NOT use paper that is curled, wrinkled, folded, ripped, stapled, paper clipped, pasted or taped.
- DO NOT use cardboard, newspaper or fabric.
- Make sure documents with correction fluid or written in ink are completely dry.

1. Lift up and unfold the ADF document support (1).

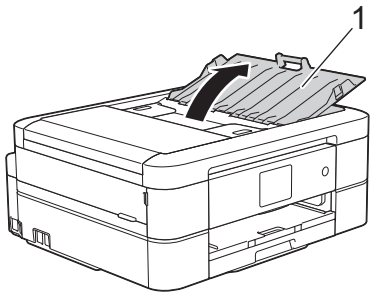

2. Fan the stack of paper well to avoid paper jams and misfeeds.
3. Adjust the paper guides (1) to fit the document size.

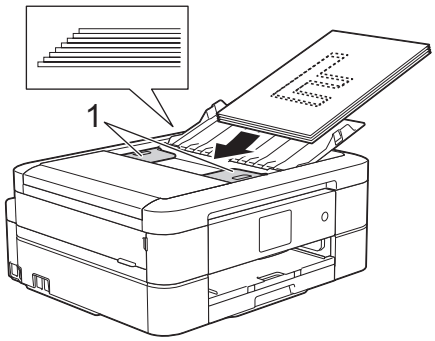

4. Place your document, **face down**, **top edge first** in the ADF underneath the paper guides until you feel the document touch the feed rollers and the LCD displays `[ADF Ready.]`.

IMPORTANT

DO NOT leave any documents on the scanner glass. If you do this, the ADF may jam.

Related Information

- Load Documents
- Copy a Document
- Error and Maintenance Messages
- Telephone and Fax Problems
- Other Problems

Load Documents on the Scanner Glass

Use the scanner glass to fax, copy, or scan one page at a time.

Document Sizes Supported

Length:	Up to 297 mm
Width:	Up to 215.9 mm
Weight:	Up to 2 kg

(ADF models)

To use the scanner glass, the ADF must be empty and the ADF document support must be closed.

1. Lift the document cover.
2. Place the document **face down** in the upper left corner of the scanner glass, aligned with the arrow as shown in the illustration.

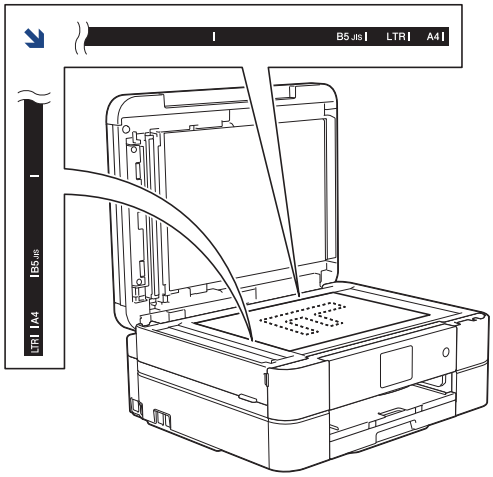

3. Close the document cover.

IMPORTANT

If you are scanning a book or thick document, DO NOT slam or press on the document cover.

Related Information

- Load Documents
- Copy a Document
- Telephone and Fax Problems
- Other Problems

Unscannable Area

The unscannable area of a page depends on the settings in the application you are using. The figures below show the typical unscannable measurements.

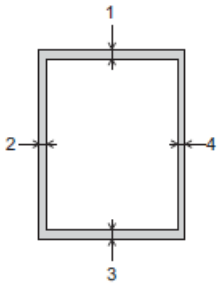

Usage	Document Size	Top (1) Bottom (3)	Left (2) Right (4)
Fax	A4	3 mm	3 mm [1]
	Letter		4 mm
	Legal		
Copy	All paper sizes		3 mm
Scan		1 mm	1 mm

1 The unscannable area is 1 mm when using the ADF.

Related Information

- Load Documents

Print

- Print from Your Computer (Windows)
- Print from Your Computer (Mac)

Print from Your Computer (Windows)

- Print a Photo (Windows)
- Print a Document (Windows)
- Cancel a Print Job (Windows)
- Print More Than One Page on a Single Sheet of Paper (N in 1) (Windows)
- Print as a Poster (Windows)
- Print on Both Sides of the Paper Automatically (Automatic 2-sided Printing) (Windows)
- Print as a Booklet Automatically (Windows)
- Print a Colour Document in Greyscale (Windows)
- Prevent Smudged Printouts and Paper Jams (Windows)
- Use a Preset Print Profile (Windows)
- Change the Default Print Settings (Windows)
- Print Settings (Windows)

Print a Photo (Windows)

1. Select the print command in your application.
2. Select **Brother MFC-XXXX Printer** (where XXXX is the name of your model), and then click the printing properties or preferences button.

   The printer driver window appears.
3. Make sure you have loaded the correct media in the paper tray.

IMPORTANT

- We recommend using the photo paper tray located on the top of the output tray cover to print on Photo (10 x 15 cm) and Photo L (9 x 13 cm) paper. (Available only for certain models)
- For best results, use Brother paper.
- When you print on Brother photo paper, load one extra sheet of the same photo paper in the paper tray.

4. Click the **Basic** tab.
5. Click the **Media Type** drop-down list, and then select the type of paper you are using.

IMPORTANT

To get the best print quality for the settings you have selected, always set the **Media Type** option to match the type of paper you load.

6. Click the **Paper Size** drop-down list, and then select your paper size.
7. Select the **Borderless** check box, if needed.
8. For **Colour Mode**, select the **Natural** or **Vivid** option.
9. In the **Orientation** field, select the **Portrait** or **Landscape** option to set the orientation of your printout.

If your application contains a similar setting, we recommend that you set the orientation using the application.

10. Type the number of copies (1-999) you want in the **Copies** field.
11. Change other printer settings, if needed.
12. Click **OK**.
13. Complete your print operation.

Related Information

- Print from Your Computer (Windows)
- Print Settings (Windows)

Print a Document (Windows)

1. Select the print command in your application.
2. Select **Brother MFC-XXXX Printer** (where XXXX is the name of your model), and then click the printing properties or preferences button.

   The printer driver window appears.
3. Make sure you have loaded the correct size paper in the paper tray.
4. Click the **Basic** tab.
5. Click the **Media Type** drop-down list, and then select the type of paper you are using.

   IMPORTANT

   To get the best print quality for the settings you have selected, always set the **Media Type** option to match the type of paper you load.
6. Click the **Paper Size** drop-down list, and then select your paper size.
7. For **Colour Mode**, select the **Natural** or **Vivid** option.
8. In the **Orientation** field, select the **Portrait** or **Landscape** option to set the orientation of your printout.

   If your application contains a similar setting, we recommend that you set the orientation using the application.
9. Type the number of copies (1-999) you want in the **Copies** field.
10. To print multiple pages on a single sheet of paper or print one page of your document on multiple sheets, click the **Multiple Page** drop-down list, and then select your options.
11. Change other printer settings, if needed.
12. Click **OK**.
13. Complete your print operation.

Related Information

- Print from Your Computer (Windows)
- Check the Ink Volume
- Print Settings (Windows)

Cancel a Print Job (Windows)

If a print job was sent to the print queue and did not print, or was sent to the print queue in error, you may have to delete it to allow subsequent jobs to print.

1. Double-click the printer icon in the task tray.
2. Select the print job you want to cancel.
3. Click the **Document** menu.
4. Select **Cancel**.
5. Click **Yes**.

Related Information

- Print from Your Computer (Windows)
- Monitor Machine Status from Your Computer (Windows)

Print More Than One Page on a Single Sheet of Paper (N in 1) (Windows)

1. Select the print command in your application.
2. Select **Brother MFC-XXXX Printer** (where XXXX is the name of your model), and then click the printing properties or preferences button.

   The printer driver window appears.
3. Click the **Basic** tab.
4. In the **Orientation** field, select the **Portrait** or **Landscape** option to set the orientation of your printout.

> If your application contains a similar setting, we recommend that you set the orientation using the application.

5. Click the **Multiple Page** drop-down list, and then select the **2 in 1**, **4 in 1**, **9 in 1**, or **16 in 1** option.
6. Click the **Page Order** drop-down list, and then select your page order.
7. Click the **Border Line** drop-down list, and then select your border line type.
8. Change other printer settings, if needed.
9. Click **OK**, and then complete your print operation.

Related Information

- Print from Your Computer (Windows)
- Print Settings (Windows)

Print as a Poster (Windows)

Enlarge your print size and print the document in poster mode.

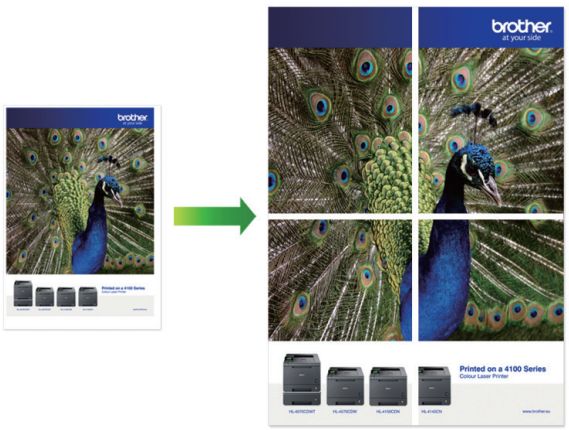

1. Select the print command in your application.
2. Select **Brother MFC-XXXX Printer** (where XXXX is the name of your model), and then click the printing properties or preferences button.

   The printer driver window appears.
3. Click the **Basic** tab.
4. Click the **Multiple Page** drop-down list, and then select the **1 in 2x2 pages** or **1 in 3x3 pages** option.
5. Change other printer settings, if needed.
6. Click **OK**.
7. Complete your print operation.

Related Information

- Print from Your Computer (Windows)
- Print Settings (Windows)

Print on Both Sides of the Paper Automatically (Automatic 2-sided Printing) (Windows)

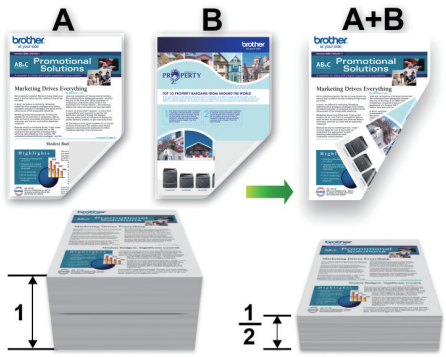

- Make sure the jam clear cover is closed.
- If paper is curled, straighten it and put it back in the paper tray.
- Use regular paper or thin paper. DO NOT use bond paper.
- If the paper is thin, it may wrinkle.

1. Select the print command in your application.
2. Select **Brother MFC-XXXX Printer** (where XXXX is the name of your model), and then click the printing properties or preferences button.

   The printer driver window appears.
3. Click the **Basic** tab.
4. In the **Orientation** field, select the **Portrait** or **Landscape** option to set the orientation of your printout.

If your application contains a similar setting, we recommend that you set the orientation using the application.

5. Click the **2-sided / Booklet** drop-down list, and then select **2-sided**.
6. Click the **2-sided Settings** button.
7. Select one of the options from the **2-sided Type** menu.

   When 2-sided is selected, four types of 2-sided binding are available for each orientation:

Option for Portrait	Description
Long Edge (Left)	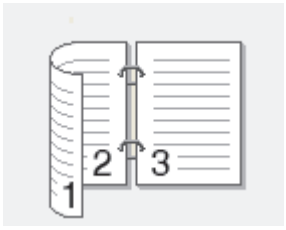
Long Edge (Right)	

Option for Portrait	Description
Short Edge (Top)	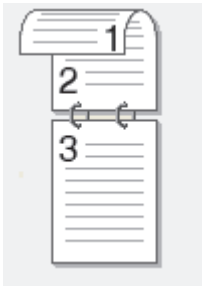
Short Edge (Bottom)	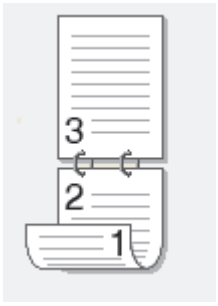

Option for Landscape	Description
Long Edge (Top)	
Long Edge (Bottom)	
Short Edge (Right)	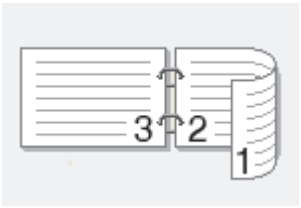
Short Edge (Left)	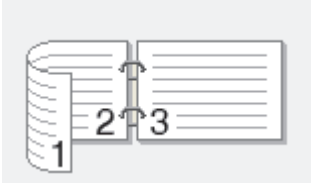

8. Select the **Binding Offset** check box if you want to specify the offset for binding in inches or millimetres.
9. Click **OK** to return to the printer driver window.
10. Change other printer settings, if needed.

The Borderless feature is not available when using this option.

11. Click **OK** again, and then complete your print operation.

Related Information

- Print from Your Computer (Windows)
- Print Settings (Windows)
- Print as a Booklet Automatically (Windows)

Print as a Booklet Automatically (Windows)

Use this option to print a document in booklet format using 2-sided printing. The document's pages will be arranged according to the correct page number and will allow you to fold at the centre of the print output without having to change the order of the printed pages.

- Make sure the jam clear cover is closed.
- If paper is curled, straighten it and put it back in the paper tray.
- Use regular paper or thin paper. DO NOT use bond paper.
- If the paper is thin, it may wrinkle.

1. Select the print command in your application.
2. Select **Brother MFC-XXXX Printer** (where XXXX is the name of your model), and then click the printing properties or preferences button.

   The printer driver window appears.
3. Click the **Basic** tab.
4. In the **Orientation** field, select the **Portrait** or **Landscape** option to set the orientation of your printout.

If your application contains a similar setting, we recommend that you set the orientation using the application.

5. Click the **2-sided / Booklet** drop-down list, and then select the **Booklet** option.
6. Click the **2-sided Settings** button.
7. Select one of the options from the **2-sided Type** menu.

   There are two types of 2-sided binding directions available for each orientation:

Option for Portrait	Description
Left Binding	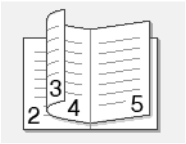
Right Binding	

Option for Landscape	Description
Top Binding	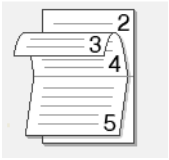
Bottom Binding	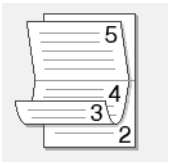

8. Select one of the options from the **Booklet Printing Method** menu.

Option	Description
All Pages at Once	Every page will be printed in booklet format (four pages to every piece of paper, two pages per side). Fold your printout in the middle to create the booklet.
Divide into Sets	This option prints the whole booklet in smaller individual booklet sets, allowing you to fold at the centre of the smaller individual booklet sets without having to change the order of the printed pages. You can specify the number of sheets in each smaller booklet set (from 1-15). This option can be helpful when folding a printed booklet that has a large number of pages.

9. Select the **Binding Offset** check box if you want to specify the offset for binding in inches or millimetres.
10. Click **OK** to return to the printer driver window.
11. Change other printer settings, if needed.

The Borderless feature is not available when using this option.

12. Click **OK**.
13. Complete your print operation.

Related Information

- Print from Your Computer (Windows)
- Print Settings (Windows)
- Print on Both Sides of the Paper Automatically (Automatic 2-sided Printing) (Windows)

Print a Colour Document in Greyscale (Windows)

Greyscale mode makes the print processing speed faster than colour mode. If your document contains colour, selecting Greyscale mode prints your document in 256 levels of greyscale.

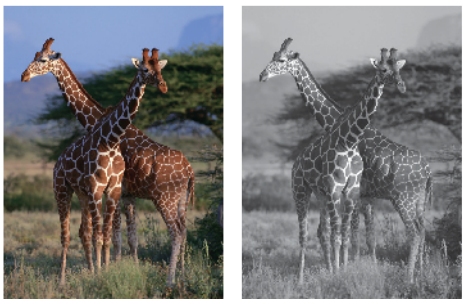

1. Select the print command in your application.
2. Select **Brother MFC-XXXX Printer** (where XXXX is the name of your model), and then click the printing properties or preferences button.

   The printer driver window appears.
3. Click the **Advanced** tab.
4. For **Colour / Greyscale**, select **Greyscale**.
5. Change other printer settings, if needed.
6. Click **OK**.
7. Complete your print operation.

Related Information

- Print from Your Computer (Windows)

Prevent Smudged Printouts and Paper Jams (Windows)

Some types of print media may need more drying time. Change the **Reduce Smudge** option if you have problems with smudged printouts or paper jams.

1. Select the print command in your application.
2. Select **Brother MFC-XXXX Printer** (where XXXX is the name of your model), and then click the printing properties or preferences button.

   The printer driver window appears.
3. Click the **Advanced** tab.
4. Click the **Other Print Options** button.
5. Select the **Reduce Smudge** option on the left side of the screen.
6. Select one of the following options:

Media Type	Option		Description
Plain Paper	**2-sided Printing** or **Simplex Printing**	**Off**	Select this mode to print at normal speed, using a normal amount of ink.
		Low	Select this mode to print at a slower speed, using a normal amount of ink.
		High	Select this mode to print at the same speed as **Low**, but using less ink.

7. Click **OK** to return to the printer driver window.
8. Click **OK**.
9. Complete your print operation.

Related Information

- Print from Your Computer (Windows)
- Paper Handling and Printing Problems
- Change the Print Setting Options When Having Printing Problems

Use a Preset Print Profile (Windows)

Print Profiles are presets designed to give you quick access to frequently-used printing configurations.

1. Select the print command in your application.
2. Select **Brother MFC-XXXX Printer** (where XXXX is the name of your model), and then click the printing properties or preferences button.

   The printer driver window appears.
3. Click the **Print Profiles** tab.

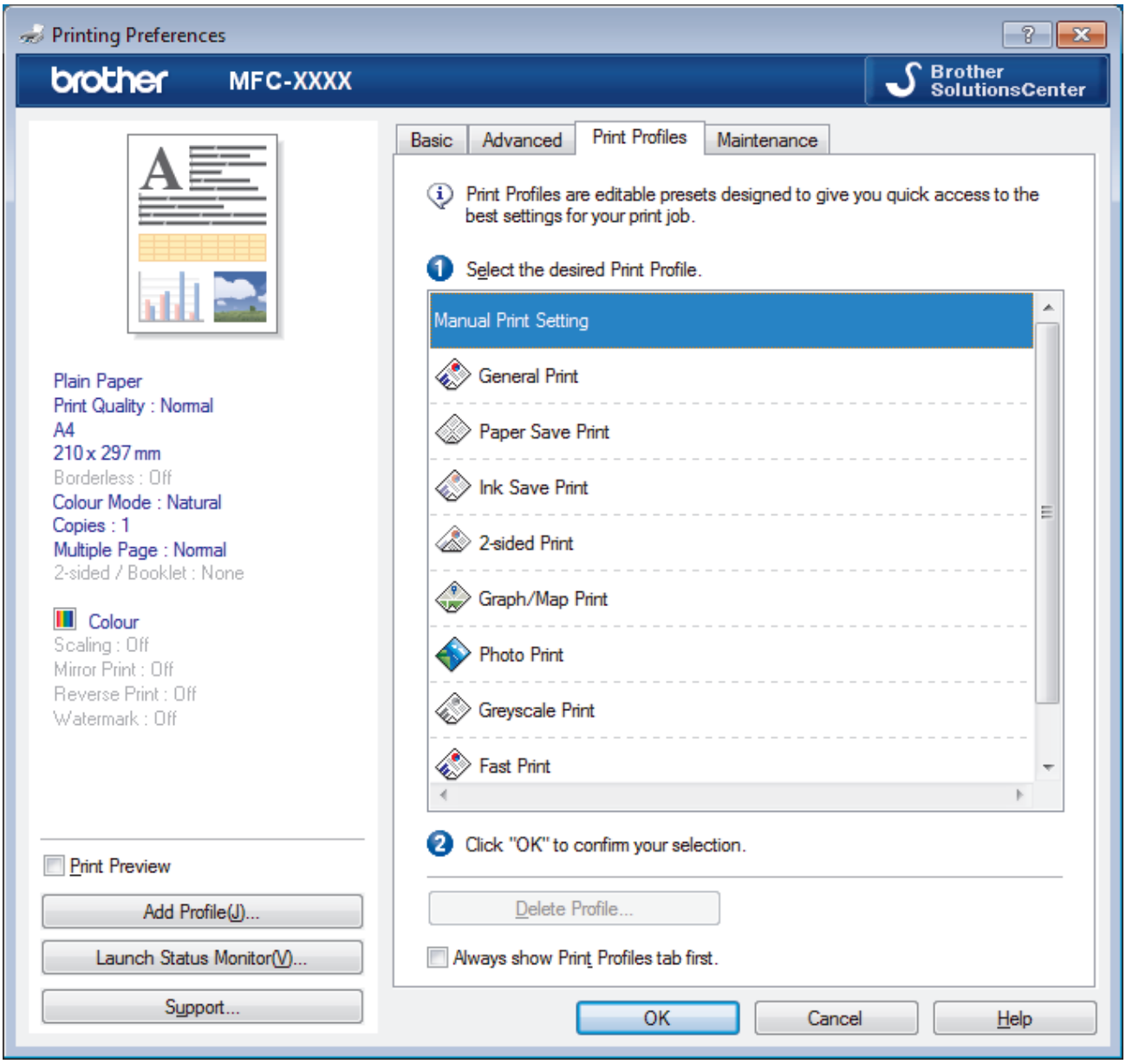

4. Select your profile from the print profile list.

   The profile settings are shown on the left side of the printer driver window.
5. Do one of the following:
   - If the settings are correct for your print job, click **OK**.
   - To change the settings, go back to the **Basic** or **Advanced** tab, change settings, and then click **OK**.

To display the **Print Profiles** tab at the front of the window the next time you print, select the **Always show Print Profiles tab first.** check box.

Related Information

- Print from Your Computer (Windows)
- Create or Delete Your Print Profile (Windows)
- Print Settings (Windows)

Create or Delete Your Print Profile (Windows)

Add up to 20 new print profiles with customised settings.

1. Select the print command in your application.
2. Select **Brother MFC-XXXX Printer** (where XXXX is the name of your model), and then click the printing properties or preferences button.

   The printer driver window appears.
3. Click the **Basic** tab and the **Advanced** tab, and configure the print settings you want for the new Print Profile.
4. Click the **Print Profiles** tab.
5. Do one of the following:

   To create a new print profile:

   a. Click **Add Profile**.

      The **Add Profile** dialog box appears.

   b. Type the new profile name in the **Name** field.

   c. Click the icon you want to use to represent this profile from the icon list.

   d. Click **OK**.

      The new Print Profile name is added to the list in the **Print Profiles** tab.

   To delete a print profile that you created:

   a. Click **Delete Profile**.

      The **Delete Profile** dialog box appears.

   b. Select the profile you want to delete.

   c. Click **Delete**.

   d. Click **Yes**.

   e. Click **Close**.

Related Information

- Use a Preset Print Profile (Windows)

Change the Default Print Settings (Windows)

When you change an application's print settings, the changes only apply to documents printed with that application. To change print settings for all Windows applications, you must configure the printer driver properties.

1. Do one of the following:
   - For Windows Server 2008

     Click **(Start)** > **Control Panel** > **Hardware and Sound** > **Printers**.
   - For Windows 7 and Windows Server 2008 R2

     Click **(Start)** > **Devices and Printers**.
   - For Windows 8

     Move your mouse to the lower right corner of your desktop. When the menu bar appears, click **Settings**, and then click **Control Panel**. In the **Hardware and Sound** group, click **View devices and printers**.
   - For Windows 10 and Windows Server 2016

     Click > **Windows System** > **Control Panel**. In the **Hardware and Sound** group, click **View devices and printers**.
   - For Windows Server 2012

     Move your mouse to the lower right corner of your desktop. When the menu bar appears, click **Settings**, and then click **Control Panel**. In the **Hardware** group, click **View devices and printers**.
   - For Windows Server 2012 R2

     Click **Control Panel** on the **Start** screen. In the **Hardware** group, click **View devices and printers**.
2. Right-click the **Brother MFC-XXXX Printer** icon (where XXXX is your model name), and then select **Printer properties**. If printer driver options appear, select your printer driver.
3. Click the **General** tab, and then click the **Printing Preferences...** or **Preferences...** button.

   The printer driver dialog box appears.
4. Select the print settings you want to use as defaults for all of your Windows programs.
5. Click **OK**.
6. Close the printer properties dialog box.

Related Information

- Print from Your Computer (Windows)
- Print Settings (Windows)

Print Settings (Windows)

Basic Tab

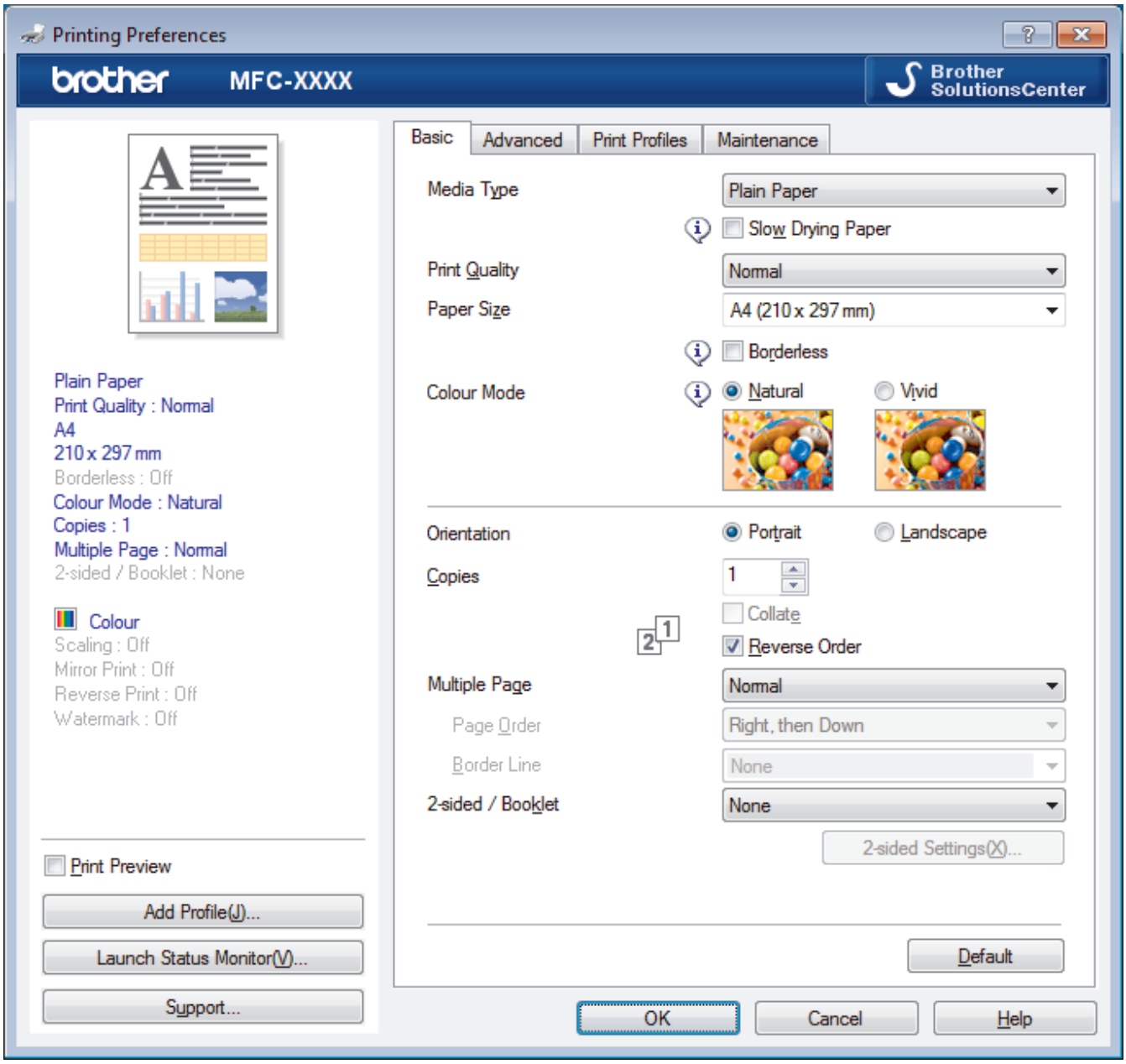

1. **Media Type**

   Select the type of media you want to use. To achieve the best print results, the machine automatically adjusts its print settings according to the selected media type.

   Slow Drying Paper

   Select this option if you use a type of plain paper on which ink dries slowly. This option may cause slight blurring of the text.

2. **Print Quality**

   Select the print resolution you want. Because print quality and speed are related, the higher the quality, the longer it will take to print the document.

3. **Paper Size**

   Select the size of the paper you want to use. You can either choose from standard paper sizes or create a custom paper size.

Borderless

Select this option to print photos without borders. Because the image data is created slightly larger than the paper size you are using, this will cause some cropping of the photo edges.

You may not be able to select the Borderless option for some combinations of media type and quality, or from some applications.

4. **Colour Mode**

   Select the colour mode to suit your preference.

5. **Orientation**

   Select the orientation (portrait or landscape) of your printout.

   If your application contains a similar setting, we recommend that you set the orientation using the application.

6. **Copies**

   Type the number of copies (1-999) that you want to print in this field.

   Collate

   Select this option to print sets of multi-page documents in the original page order. When this option is selected, one complete copy of your document will print, and then reprint according to the number of copies you choose. If this option is not selected, then each page will print according to the number of copies chosen before the next page of the document is printed.

   Reverse Order

   Select this option to print your document in reverse order. The last page of your document will be printed first.

7. **Multiple Page**

   Select this option to print multiple pages on a single sheet of paper, or print one page of your document on multiple sheets.

   Page Order

   Select the page order when printing multiple pages on a single sheet of paper.

   Border Line

   Select the type of border to use when printing multiple pages on a single sheet of paper.

8. **2-sided / Booklet**

   Select this option to print on both sides of the paper, or print a document in booklet format using 2-sided printing.

   2-sided Settings button

   Click this button to select the type of 2-sided binding. Four types of 2-sided bindings are available for each orientation.

Advanced Tab

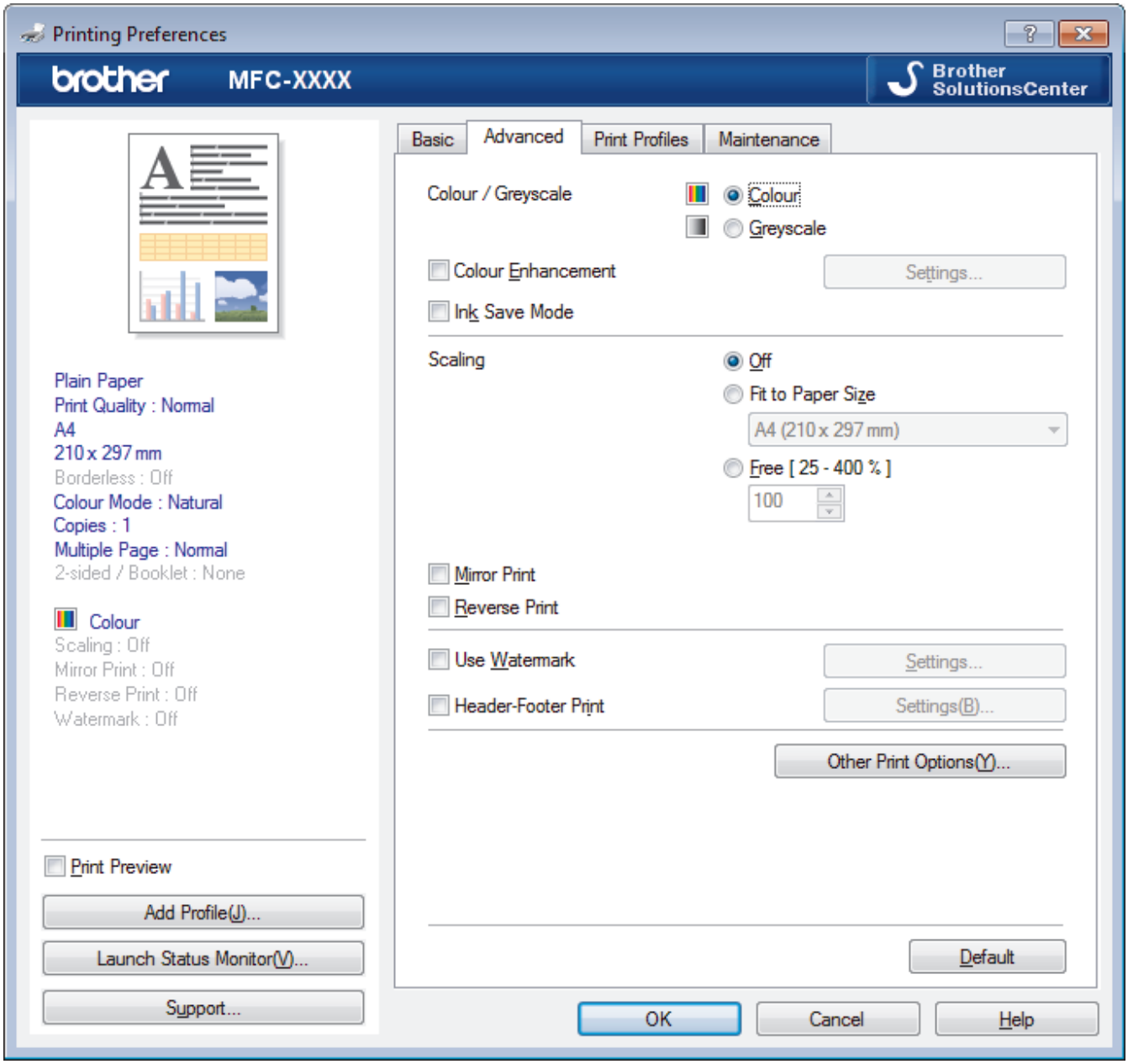

1. **Colour / Greyscale**

   Select colour or greyscale printing. The print speed is faster in greyscale mode than it is in colour mode. If your document contains colour and you select greyscale mode, your document will be printed using 256 levels of greyscale.

2. **Colour Enhancement**

   Select this option to use the Colour Enhancement feature. This feature analyses your image to improve its sharpness, white balance and colour density. This process may take several minutes depending on the image size and your computer's specifications.

3. **Ink Save Mode**

   Select this option to print using lighter colours and emphasise image outlines. The amount of ink that is saved varies, depending on the type of documents printed. Ink Save Mode may make your printouts look different than they appear on your screen.

   The Ink Save Mode feature is supported by technology from Reallusion, Inc.

   REALLUSION

4. **Scaling**

   Select these options to enlarge or reduce the size of the pages in your document.

Fit to Paper Size

Select this option to enlarge or reduce the document pages to fit a specified paper size. When you select this option, select the paper size you want from the drop-down list.

Free

Select this option to enlarge or reduce the document pages manually. When you select this option, type a value into the field.

5. **Mirror Print**

   Select this option to reverse the printed image on the page horizontally from left to right.

6. **Reverse Print**

   Select this option to rotate the printed image 180 degrees.

7. **Use Watermark**

   Select this option to print a logo or text on your document as a watermark. Select one of the preset watermarks, add a new watermark, or use an image file you have created.

8. **Header-Footer Print**

   Select this option to print the date, time and PC login user name on the document.

9. **Other Print Options button**

(DCP-J572DW/DCP-J772DW/MFC-J690DW) Photo Paper Tray Help

Select this option to display the instructions for use of the photo paper tray.

Change Data Transfer Mode

Select the print data transfer mode to improve print quality or print speed.

Advanced Colour Settings

Select the method that the machine uses to arrange dots to express halftones.

The printout colour can be adjusted to achieve the closest match to what appears on your computer screen.

(DCP-J572DW/MFC-J491DW) Advanced Quality Settings

Select this option to print your documents at the highest quality.

Reduce Smudge

Some types of print media may need more drying time. Change this option if you have problems with smudged printouts or paper jams.

Retrieve Printer's Colour Data

Select this option to optimise the print quality using the machine's factory settings, which are set specifically for your Brother machine. Use this option when you have replaced the machine or changed the machine's network address.

Print Archive

Select this option to save the print data as a PDF file to your computer.

Related Information

- Print from Your Computer (Windows)
- Error and Maintenance Messages
- Paper Handling and Printing Problems
- Print a Photo (Windows)
- Print a Document (Windows)
- Print More Than One Page on a Single Sheet of Paper (N in 1) (Windows)
- Print as a Poster (Windows)
- Print on Both Sides of the Paper Automatically (Automatic 2-sided Printing) (Windows)
- Print as a Booklet Automatically (Windows)

- Use a Preset Print Profile (Windows)
- Change the Default Print Settings (Windows)
- Change the Print Setting Options When Having Printing Problems

Print from Your Computer (Mac)

- Print a Photo (Mac)
- Print a Document (Mac)
- Print on Both Sides of the Paper Automatically (Automatic 2-sided Printing) (Mac)
- Print More Than One Page on a Single Sheet of Paper (N in 1) (Mac)
- Print a Colour Document in Greyscale (Mac)
- Prevent Smudged Printouts and Paper Jams (Mac)
- Print Options (Mac)

Print a Photo (Mac)

1. Make sure you have loaded the correct media in the paper tray.

   IMPORTANT

   - We recommend using the photo paper tray located on the top of the output tray cover to print on Photo (10 x 15 cm) and Photo L (9 x 13 cm) paper. (Available only for certain models)
   - For best results, use Brother paper.
   - When you print on Brother photo paper, load one extra sheet of the same photo paper in the paper tray.

2. From an application, such as Apple Preview, click the **File** menu, and then select **Print**.
3. Select **Brother MFC-XXXX** (where XXXX is your model name).

   For more page setup options, click the **Show Details** button.

4. Click the **Paper Size** pop-up menu, and then select your paper size.

   To print photographs without margins, select a borderless paper size option.

5. Click the **Orientation** button that matches the way you want the photo to print.
6. Click the application pop-up menu, and then select **Print Settings**.

   The **Print Settings** options appear.
7. Click the **Media Type** pop-up menu, and then select the media type you want to use.

   IMPORTANT

   To get the best print quality for the settings you have selected, always set the **Media Type** option to match the type of paper you load.

8. Change other printer settings, if needed.
9. Click **Print**.

Related Information

- Print from Your Computer (Mac)
- Paper Handling and Printing Problems
- Print Options (Mac)

Print a Document (Mac)

1. Make sure you have loaded the correct size paper in the paper tray.
2. From an application, such as Apple TextEdit, click the **File** menu, and then select **Print**.
3. Select **Brother MFC-XXXX** (where XXXX is your model name).

   For more page setup options, click the **Show Details** button.
4. Click the **Paper Size** pop-up menu, and then select your paper size.
5. Select the **Orientation** option that matches the way you want the document to print.
6. Click the application pop-up menu, and then select **Print Settings**.

   The **Print Settings** options appear.
7. Click the **Media Type** pop-up menu, and then select the media type you want to use.

   IMPORTANT

   To get the best print quality for the settings you have selected, always set the **Media Type** option to match the type of paper you load.
8. Change other printer settings, if needed.
9. Click **Print**.

Related Information

- Print from Your Computer (Mac)
- Check the Ink Volume
- Print Options (Mac)

Print on Both Sides of the Paper Automatically (Automatic 2-sided Printing) (Mac)

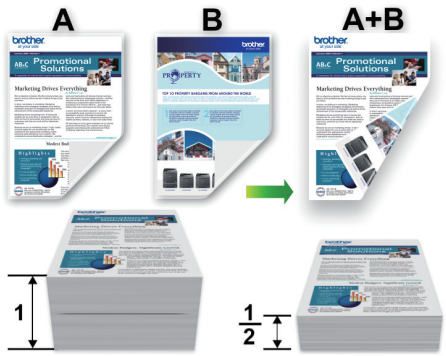

1. From an application, such as Apple TextEdit, click the **File** menu, and then select **Print**.
2. Select **Brother MFC-XXXX** (where XXXX is your model name).

For more page setup options, click the **Show Details** button.

3. Select the **Orientation** option that matches the way you want the document to print.
4. Click the application pop-up menu, and then select **Layout**.
   The **Layout** setting options appear.
5. In the **Two-Sided** section, select the **Short-Edge binding** or **Long-Edge binding** option.
6. Change other printer settings, if needed.

The Borderless feature is not available when using this option.

7. Click **Print**.

Related Information

- Print from Your Computer (Mac)
- Print Options (Mac)

Print More Than One Page on a Single Sheet of Paper (N in 1) (Mac)

1. From an application, such as Apple TextEdit, click the **File** menu, and then select **Print**.
2. Select **Brother MFC-XXXX** (where XXXX is your model name).

   For more page setup options, click the **Show Details** button.
3. Click the application pop-up menu, and then select **Layout**.

   The **Layout** setting options appear.
4. Click the **Pages per Sheet** pop-up menu, and then select the number of pages to print on each sheet.
5. Select the **Layout Direction** option.
6. Click the **Border** pop-up menu, and then select your border line type.
7. Change other printer settings, if needed.
8. Click **Print**.

Related Information

- Print from Your Computer (Mac)
- Print Options (Mac)

Print a Colour Document in Greyscale (Mac)

Greyscale mode makes the print processing speed faster than colour mode. If your document contains colour, selecting Greyscale mode prints your document in 256 levels of greyscale.

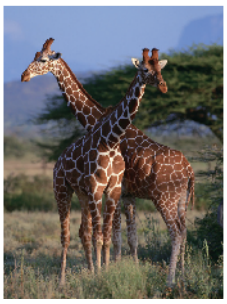

1. From an application, such as Apple TextEdit, click the **File** menu, and then select **Print**.
2. Select **Brother MFC-XXXX** (where XXXX is your model name).

   For more page setup options, click the **Show Details** button.
3. Click the application pop-up menu, and then select **Print Settings**.

   The **Print Settings** options appear.
4. Click the **Color / Grayscale** pop-up menu, and then select the **Grayscale** option.
5. Change other printer settings, if needed.
6. Click **Print**.

Related Information

- Print from Your Computer (Mac)

Prevent Smudged Printouts and Paper Jams (Mac)

Some types of print media may need more drying time. Change the **Reduce Smudge** option if you have problems with smudged printouts or paper jams.

1. From an application, such as Apple TextEdit, click the **File** menu, and then select **Print**.
2. Select **Brother MFC-XXXX** (where XXXX is your model name).

   For more page setup options, click the **Show Details** button.
3. Click the application pop-up menu, and then select **Print Settings**.

   The **Print Settings** options appear.
4. Click the **Advanced** print settings list.
5. Click the **Reduce Smudge** menu.
6. Select one of the following options:

Media Type	Option		Description
Plain Paper	**2-sided Printing** or **Simplex Printing**	**Off**	Select this mode to print at normal speed, using a normal amount of ink.
		Low	Select this mode to print at a slower speed, using a normal amount of ink.
		High	Select this mode to print at the same speed as **Low**, but using less ink.

7. Change other printer settings, if needed.
8. Click **Print**.

Related Information

- Print from Your Computer (Mac)
- Paper Handling and Printing Problems
- Change the Print Setting Options When Having Printing Problems

Print Options (Mac)

Page Setup

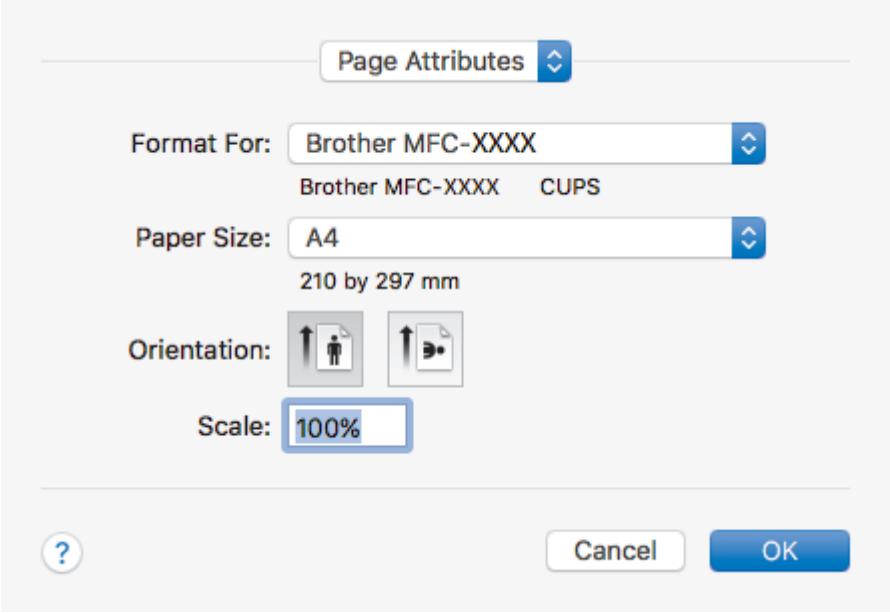

1. **Paper Size**

   Select the size of the paper you want to use. You can either choose from standard paper sizes or create a custom paper size.

2. **Orientation**

   Select the orientation (portrait or landscape) of your printout.

   If your application contains a similar setting, we recommend that you set the orientation using the application.

3. **Scale**

   Type a value into the field to enlarge or reduce the pages in your document to fit the selected paper size.

Layout

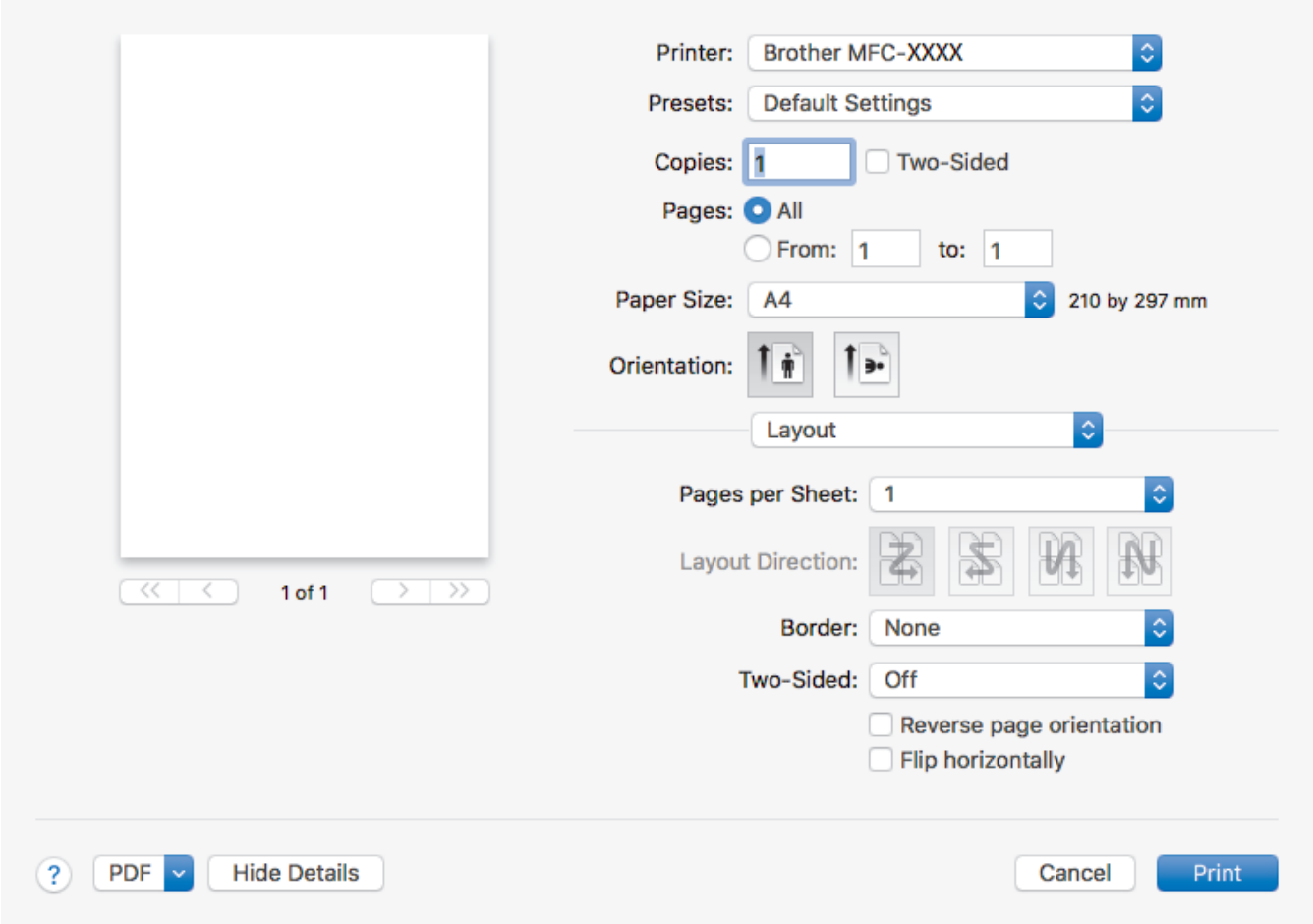

1. **Pages per Sheet**

   Select the number of pages to print on a single sheet of paper.
2. **Layout Direction**

   Select the page order when printing multiple pages on a single sheet of paper.
3. **Border**

   Select the type of border to use when printing multiple pages on a single sheet of paper.
4. **Two-Sided**

   Select whether to print on both sides of the paper.
5. **Reverse page orientation**

   Select this option to rotate the printed image 180 degrees.
6. **Flip horizontally**

   Select this option to reverse the printed image on the page horizontally from left to right.

Paper Handling

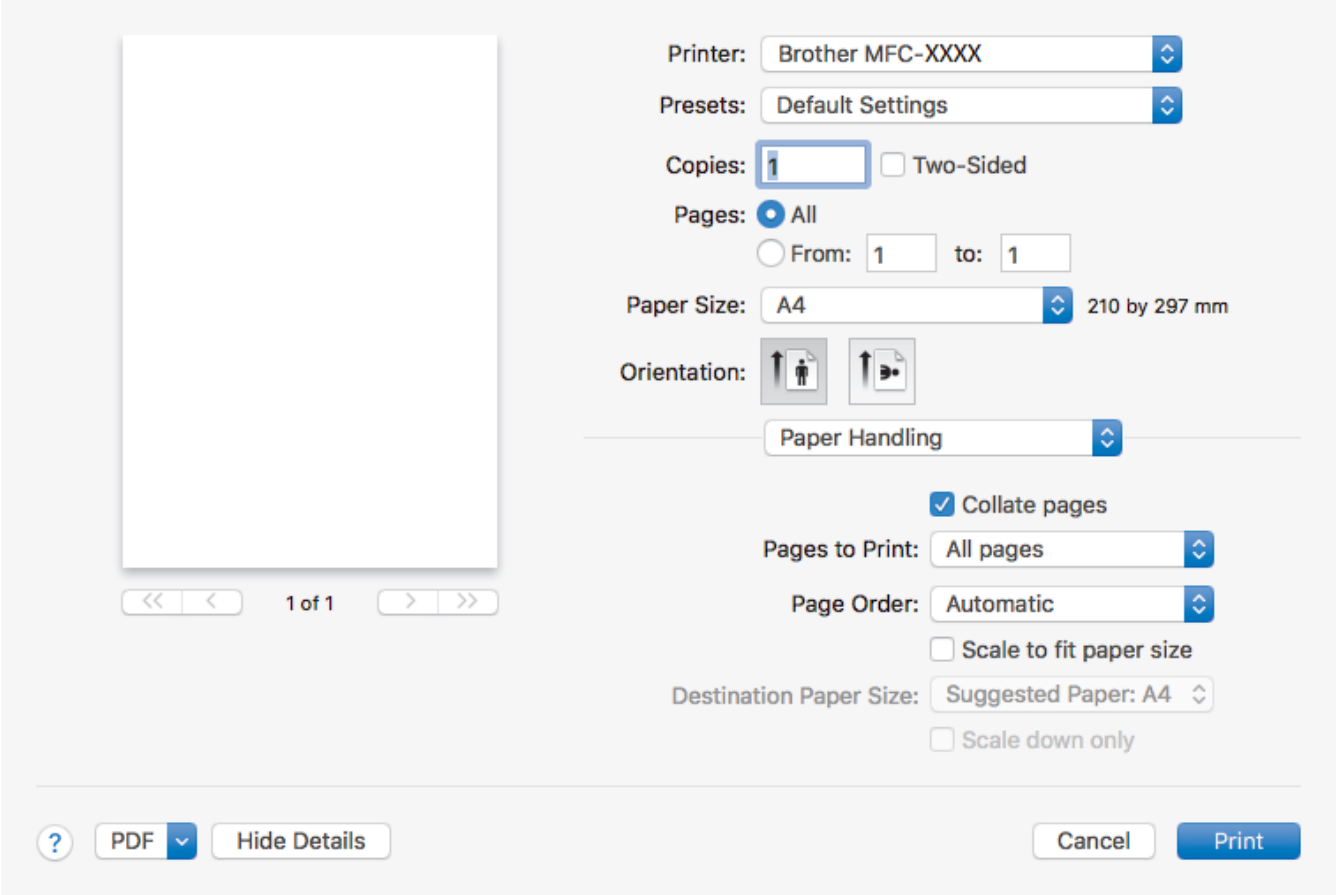

1. **Collate pages**

   Select this option to print sets of multi-page documents in the original page order. When this option is selected, one complete copy of your document will print, and then reprint according to the number of copies you choose. If this option is not selected, then each page will print according to the number of copies chosen before the next page of the document is printed.

2. **Page Order**

   Select the page order.

3. **Scale to fit paper size**

   Select this option to enlarge or reduce the pages in your document to fit the selected paper size.

4. **Destination Paper Size**

   Select the paper size to print on.

5. **Scale down only**

   Select this option if you want to reduce the pages in your document when they are too large for the selected paper size. If this option is selected and the document is formatted for a paper size that is smaller than the paper size you are using, the document will be printed at its original size.

Print Settings

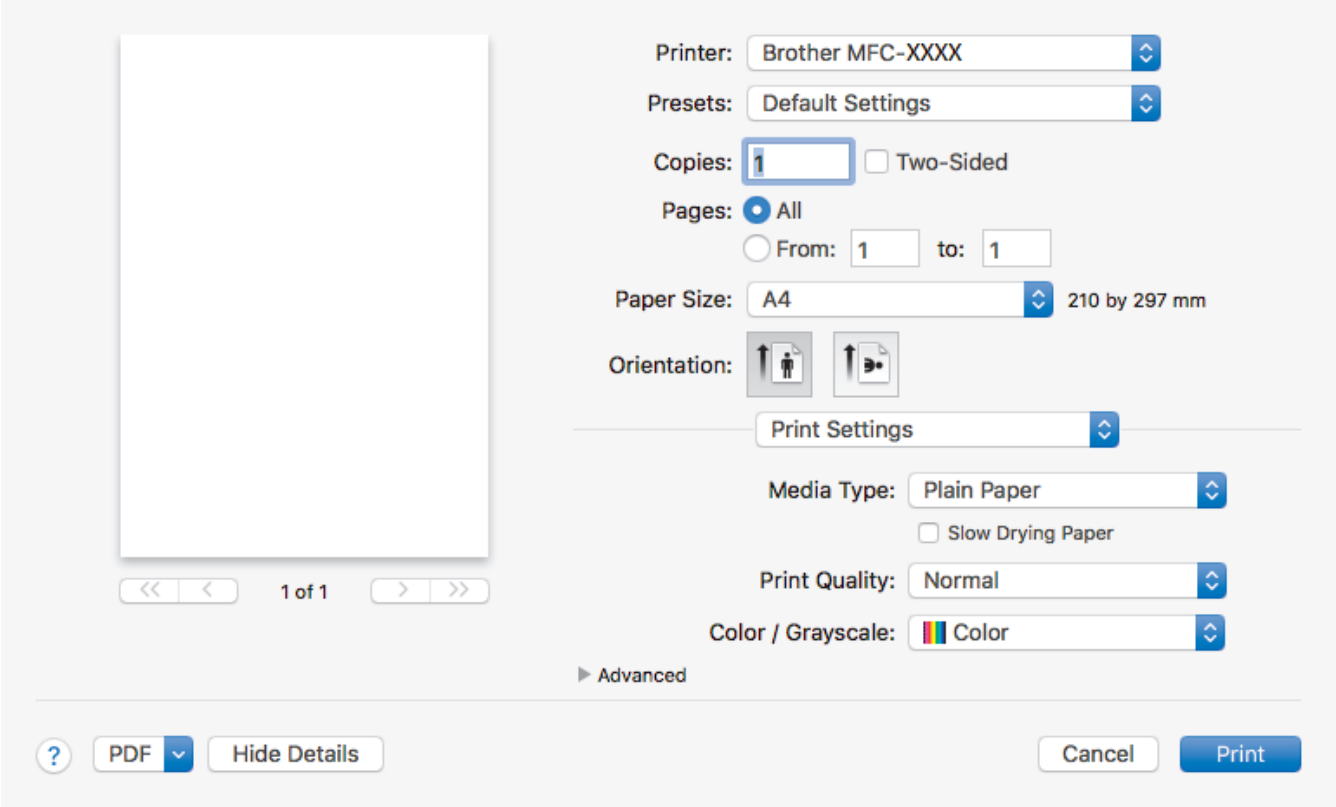

1. **Media Type**

   Select the type of media you want to use. To achieve the best print results, the machine automatically adjusts its print settings according to the selected media type.

2. **Slow Drying Paper**

   Select this option if you use a type of plain paper on which ink dries slowly. This option may cause slight blurring of the text.

3. **Print Quality**

   Select the print resolution you want. Because print quality and speed are related, the higher the quality, the longer it will take to print the document.

4. **Color / Grayscale**

   Select colour or greyscale printing. The print speed is faster in greyscale mode than it is in colour mode. If your document contains colour and you select greyscale mode, your document will be printed using 256 levels of greyscale.

5. **Advanced**

   Change Data Transfer Mode

   Select the print data transfer mode to improve print quality or print speed.

   Reduce Smudge

   Some types of print media may need more drying time. Change this option if you have problems with smudged printouts or paper jams.

   Other Print Options

   Paper Thickness

   Select the appropriate paper thickness.

   Bi-Directional Printing

   Select this option to increase the print speed. When this option is selected, the print head prints in both directions. When this option is cleared, the print head prints in only one direction, resulting in higher quality printouts but causing slower print speeds.

Sometimes, the movement of the print head may vary due to environmental conditions. This may be seen when you print vertical lines and they do not align. If you encounter this problem, turn off the Bi-Directional Printing feature.

Color Settings

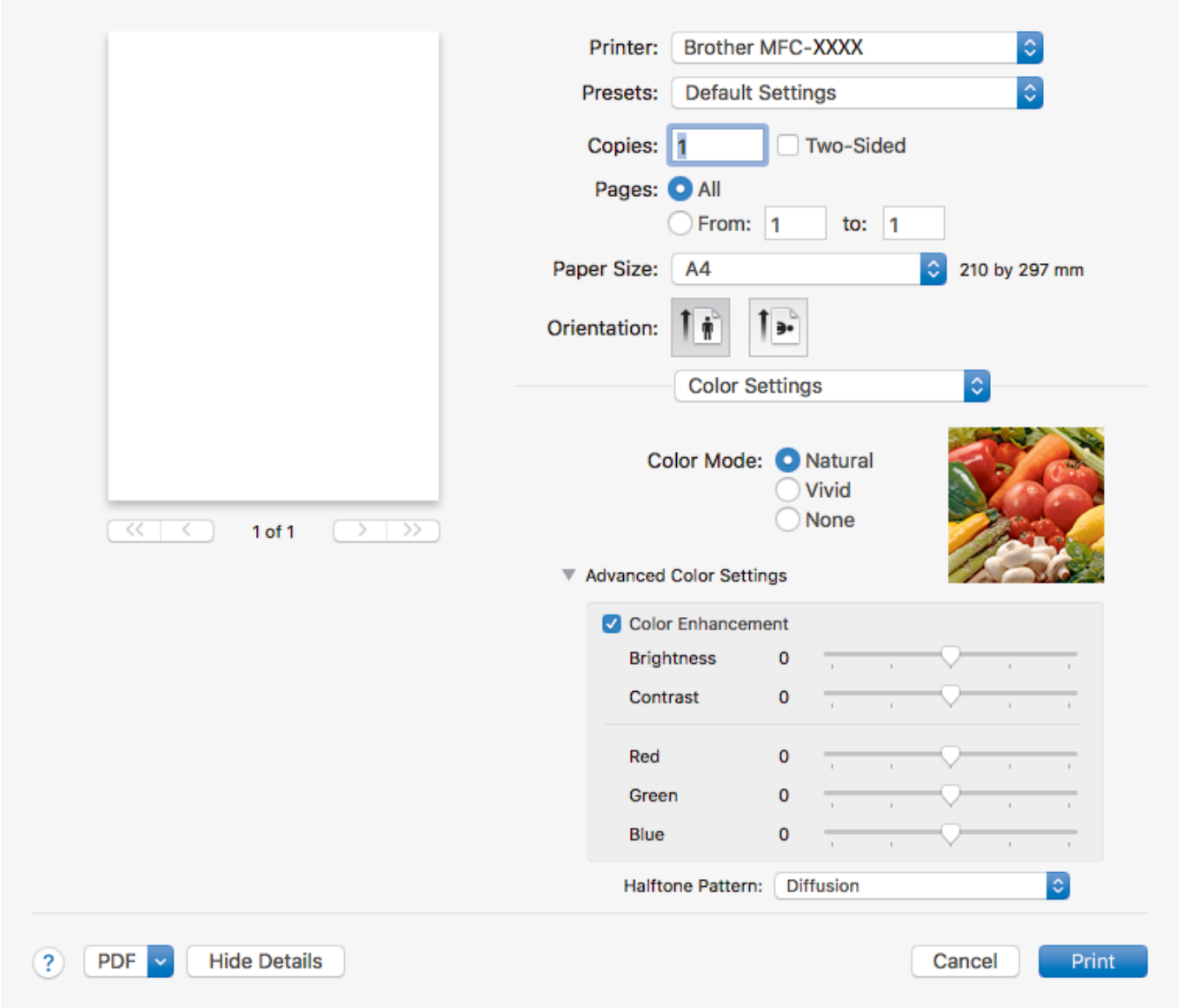

1. **Color Mode**

   Select the colour mode to suit your preference.

2. **Advanced Color Settings**

   Click the disclosure triangle to view the Advanced Colour Settings. Select the Colour Enhancement check box, and then set the options using the sliders. This process may take several minutes depending on the size of the image and the specifications of your computer.

Related Information

- Print from Your Computer (Mac)
- Error and Maintenance Messages
- Paper Handling and Printing Problems
- Print a Photo (Mac)
- Print a Document (Mac)
- Print on Both Sides of the Paper Automatically (Automatic 2-sided Printing) (Mac)
- Print More Than One Page on a Single Sheet of Paper (N in 1) (Mac)
- Change the Print Setting Options When Having Printing Problems

Scan

- Scan Using the Scan Button on Your Brother Machine
- Scan from Your Computer (Windows)
- Scan from Your Computer (Mac)

Scan Using the Scan Button on Your Brother Machine

- Scan Photos and Graphics
- Save Scanned Data to a Folder as a PDF File
- Save Scanned Data to a Memory Card or USB Flash Drive
- Scan Multiple Business Cards and Photos (Auto Crop)
- Scan to an Editable Text File Using OCR
- Scan to Email Attachment
- Web Services for Scanning on Your Network (Windows 7, Windows 8 and Windows 10)
- Change Scan Button Settings from ControlCenter4 (Windows)
- Change Scan Button Settings from Brother iPrint&Scan (Mac)

Scan Photos and Graphics

Send scanned photos or graphics directly to your computer.

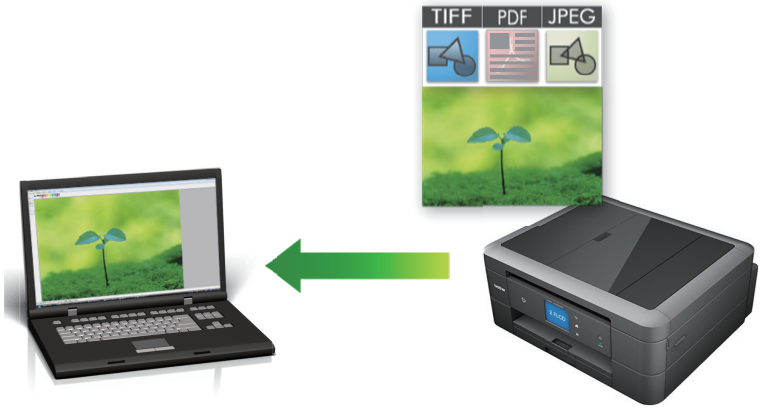

Use the Scan button on the machine to make temporary changes to the scan settings. To make permanent changes, use either ControlCenter4 (Windows) or Brother iPrint&Scan (Mac) software.

>> DCP-J572DW/MFC-J491DW
>> DCP-J772DW/MFC-J690DW/MFC-J890DW

DCP-J572DW/MFC-J491DW

1. Load your document.
2. Press (**SCAN**).
3. Press ▲ or ▼ to select the `[to PC]` option, and then press **OK**.
4. Press ▲ or ▼ to select the `[to Image]` option, and then press **OK**.
5. If the machine is connected over the network, press ▲ or ▼ to select the computer where you want to send data, and then press **OK**.

If the LCD prompts you to enter a PIN, use the control panel to enter the four-digit PIN for the computer, and then press **OK**.

6. Do one of the following:
   - To change the settings, go to the next step.
   - To use the default settings, press **Mono Start** or **Colour Start**.

`[Scan Type]` depends on the default settings. Pressing **Mono Start** or **Colour Start** does not allow you to change the settings.

7. Press ▲ or ▼ to select the `[Scan Settings]` setting, and then press **OK**.

To use the `[Scan Settings]` option, a computer with either ControlCenter4 (Windows) or Brother iPrint&Scan (Mac) software installed must be connected to the machine.

8. Press ▲ or ▼ to select the `[Set at Device]` setting, and then press **OK**.
9. Select the scan settings you want to change, and then press **OK**.

Option	Description
`Scan Type`	Select the scan type for your document.
`Resolution`	Select the scan resolution for your document.

Option	Description
File Type	Select the file format for your document.
Document Size	Select your document size.
Brightness	Select the brightness level.
Contrast	Select the contrast level.
Remove Background	Change the amount of background colour that is removed.

10. Press **Mono Start** or **Colour Start**.

[Scan Type] depends on the settings you have selected. Pressing **Mono Start** or **Colour Start** does not allow you to change the settings.

DCP-J772DW/MFC-J690DW/MFC-J890DW

1. Load your document.
2. Press [Scan] > [to PC] > [to Image].
3. If the machine is connected over the network, press ▲ or ▼ to display the computer where you want to send data, and then press the computer name.

If the LCD prompts you to enter a PIN, use the LCD to enter the four-digit PIN for the computer, and then press [OK].

4. Do one of the following:
   - To change the settings, press [Options] or [Set at Device].
   - Press [Start] to start scanning without changing additional settings.

     The machine starts scanning. If using the machine's scanner glass, follow the LCD instructions to complete the scanning job.

To use the [Options] or [Set at Device] setting, a computer with either ControlCenter4 (Windows) or Brother iPrint&Scan (Mac) software installed must be connected to the machine.

5. Select the scan settings you want to change, and then press [OK].

Option	Description
Scan Type	Select the scan type for your document.
Resolution	Select the scan resolution for your document.
File Type	Select the file format for your document.
Document Size	Select your document size.
Brightness	Select the brightness level.
Contrast	Select the contrast level.
Remove Background Colour	Change the amount of background colour that is removed.

- To save the settings as a shortcut, press [Save as Shortcut]. You will be asked if you want to make this a One Touch Shortcut. Follow the LCD instructions.

6. Press [Start].

   The machine starts scanning. If using the machine's scanner glass, follow the LCD instructions to complete the scanning job.

Related Information

- Scan Using the Scan Button on Your Brother Machine

Save Scanned Data to a Folder as a PDF File

Scan documents and save them to a folder on your computer as PDF files.

Use the Scan button on the machine to make temporary changes to the scan settings. To make permanent changes, use either ControlCenter4 (Windows) or Brother iPrint&Scan (Mac) software.

>> DCP-J572DW/MFC-J491DW
>> DCP-J772DW/MFC-J690DW/MFC-J890DW

DCP-J572DW/MFC-J491DW

1. Load your document.
2. Press (**SCAN**).
3. Press ▲ or ▼ to select the `[to PC]` option, and then press **OK**.
4. Press ▲ or ▼ to select the `[to File]` option, and then press **OK**.
5. If the machine is connected over the network, press ▲ or ▼ to select the computer where you want to send data, and then press **OK**.

If the LCD prompts you to enter a PIN, use the control panel to enter the four-digit PIN for the computer, and then press **OK**.

6. Do one of the following:
   - To change the settings, go to the next step.
   - To use the default settings, press **Mono Start** or **Colour Start**.

`[Scan Type]` depends on the default settings. Pressing **Mono Start** or **Colour Start** does not allow you to change the settings.

7. Press ▲ or ▼ to select the `[Scan Settings]` setting, and then press **OK**.

To use the `[Scan Settings]` option, a computer with either ControlCenter4 (Windows) or Brother iPrint&Scan (Mac) software installed must be connected to the machine.

8. Press ▲ or ▼ to select the `[Set at Device]` setting, and then press **OK**.
9. Select the scan settings you want to change, and then press **OK**.

Option	Description
`Scan Type`	Select the scan type for your document.

Option	Description
Resolution	Select the scan resolution for your document.
File Type	Select the file format for your document.
Document Size	Select your document size.
Brightness	Select the brightness level.
Contrast	Select the contrast level.
Remove Background	Change the amount of background colour that is removed.

10. Press **Mono Start** or **Colour Start**.

[Scan Type] depends on the settings you have selected. Pressing **Mono Start** or **Colour Start** does not allow you to change the settings.

DCP-J772DW/MFC-J690DW/MFC-J890DW

1. Load your document.
2. Press [Scan] > [to PC] > [to File].
3. If the machine is connected over the network, press ▲ or ▼ to display the computer where you want to send data, and then press the computer name.

If the LCD prompts you to enter a PIN, use the LCD to enter the four-digit PIN for the computer, and then press [OK].

4. Do one of the following:
   - To change the settings, press [Options] or [Set at Device], and then go to the next step.
   - Press [Start] to start scanning without changing additional settings.

     The machine starts scanning. If using the machine's scanner glass, follow the LCD instructions to complete the scanning job.

To use the [Options] or [Set at Device] settings, a computer with ControlCenter4 (Windows) or Brother iPrint&Scan (Mac) installed must be connected to the machine.

5. Select the scan settings you want to change, and then press [OK].

Option	Description
Scan Type	Select the scan type for your document.
Resolution	Select the scan resolution for your document.
File Type	Select the file format for your document.
Document Size	Select your document size.
Brightness	Select the brightness level.
Contrast	Select the contrast level.
Remove Background Colour	Change the amount of background colour that is removed.

- To save the settings as a shortcut, press [Save as Shortcut]. You will be asked if you want to make this a One Touch Shortcut. Follow the LCD instructions.

6. Press [Start].

The machine starts scanning. If using the machine's scanner glass, follow the LCD instructions to complete the scanning job.

Related Information

- Scan Using the Scan Button on Your Brother Machine

Save Scanned Data to a Memory Card or USB Flash Drive

Related Models: DCP-J572DW/DCP-J772DW/MFC-J690DW/MFC-J890DW

Scan documents and save them directly to a memory card or USB flash drive without using a computer.

>> DCP-J572DW
>> DCP-J772DW/MFC-J690DW/MFC-J890DW

DCP-J572DW

1. Load your document.
2. Open the media slot cover.
3. Insert a media into your machine.
   The LCD screen automatically changes.
4. Press ▲ or ▼ to select `[Scan to Media]`, and then press **OK**.
5. Do one of the following:
   - To change the settings, go to the next step.
   - To use the default settings, press **Mono Start** or **Colour Start**.

`[Scan Type]` depends on the default settings. Pressing **Mono Start** or **Colour Start** does not allow you to change the settings.

6. Select the scan settings you want to change, and then press **OK**.

Option	Description
`Scan Type`	Select the scan type for your document.
`Resolution`	Select the scan resolution for your document.
`File Type`	Select the file format for your document.
`Document Size`	Select your document size.
`ScanLongPaper(ADF)` (MFC-J491DW)	Scan a long document using the ADF.
`File Name`	Rename the file.
`File Name Style`	Select the order in which the date, counter number, and other items appear in the file names.
`Brightness`	Select the brightness level.
`Contrast`	Select the contrast level.
`Remove Background`	Change the amount of background colour that is removed.

7. Press **Mono Start** or **Colour Start**.

`[Scan Type]` depends on the settings you have selected. Pressing **Mono Start** or **Colour Start** does not allow you to change the settings.

DCP-J772DW/MFC-J690DW/MFC-J890DW

1. Load your document.

2. Open the machine's media slot cover.
3. Insert a memory card or USB flash drive into your machine.

   The LCD screen automatically changes.
4. Press [Scan to Media].
5. Do one of the following:
   - To change the settings, press [Options], and then go to the next step.

   - To set your own default settings: after making changes to settings, press the [Set New Default] option, and then press [Yes].
   - To restore the factory settings: press the [Factory Reset] option, and then press [Yes].

   - Press [Start] to start scanning without changing additional settings.

     The machine starts scanning. If using the machine's scanner glass, follow the LCD instructions to complete the scanning job.
6. Select the scan settings you want to change, and then press [OK].

Option	Description
Scan Type	Select the scan type for your document.
Resolution	Select the scan resolution for your document.
File Type	Select the file format for your document.
Document Size	Select your document size.
Scan Long Paper (ADF) (MFC-J690DW/MFC-J890DW)	Scan a long document using the ADF.
File Name	Rename the file.
File Name Style	Select the order in which the date, counter number, and other items appear in the file names.
Brightness	Select the brightness level.
Contrast	Select the contrast level.
Auto Crop (MFC-J890DW)	Scan multiple documents placed on the scanner glass to a memory card or USB flash drive. The machine will scan each document and create separate files or a single multi-page file.
Remove Background Colour	Change the amount of background colour that is removed.

   - To save the settings as a shortcut, press [Save as Shortcut]. You will be asked if you want to make this a One Touch Shortcut. Follow the LCD instructions.
7. Press [Start].
8. If you are using the scanner glass, set the next page and then press [Continue]. If there are no more pages to scan, press [Finish]. After you finish scanning, make sure you choose [Finish] before removing the memory card or USB flash drive from the machine.

IMPORTANT

The LCD displays a message while reading the data. DO NOT unplug the power cord or remove the memory card or USB flash drive from the machine while it is reading the data. You could lose your data or damage the memory card or USB flash drive.

Related Information

- Scan Using the Scan Button on Your Brother Machine
- Compatible Media

Compatible Media

Related Models: DCP-J572DW/DCP-J772DW/MFC-J690DW/MFC-J890DW

Your Brother machine has media drives (slots) for use with common data storage and digital camera media.

IMPORTANT

The USB direct interface supports only USB flash drives and digital cameras that use the USB mass storage standard. Other USB devices are not supported.

Compatible Media	
USB flash drive (DCP-J772DW/MFC-J690DW/MFC-J890DW)	
SD Memory Card SDHC Memory Card SDXC Memory Card MultiMediaCard MultiMediaCard plus	
miniSD (Adapter required) miniSDHC (Adapter required) microSD (Adapter required) microSDHC (Adapter required) MultiMediaCard mobile (Adapter required)	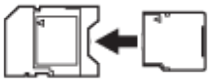

Related Information

- Save Scanned Data to a Memory Card or USB Flash Drive
- Print Photos Directly from Media

Scan Multiple Business Cards and Photos (Auto Crop)

Related Models: MFC-J890DW

You can scan multiple documents placed on the scanner glass. The machine will scan each document and use the Auto Crop feature to create separate files or a single multi-page file.

Guidelines for Auto Crop

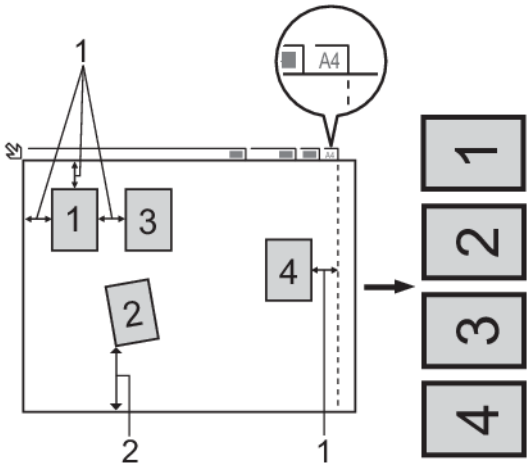

1. 10 mm or greater
2. 20 mm or greater (bottom)

- This setting is available only for documents that are rectangular or square.
- If your document is too long or wide, this feature will not work as described here.
- You must place the documents away from the edges of the scanner glass as shown in the illustration.
- You must place the documents at least 10 mm away from each other.
- Auto Crop adjusts the skew of the document on the scanner glass; however, if your document is skewed more than 45 degrees at less than 300 x 300 dpi or 10 degrees at 600 x 600 dpi, this feature will not work.
- The ADF must be empty to use Auto Crop. (ADF models only)
- The Auto Crop feature is available for a maximum of 16 documents, depending on the size of the documents.

1. Load documents on the scanner glass.

- To scan documents using the Auto Crop feature, you must put the documents on the scanner glass.
- The Auto Crop feature is supported by technology from Reallusion, Inc.

REALLUSION

2. Open the machine's media slot cover.
3. Insert a memory card or USB flash drive into your machine.
   The LCD screen automatically changes.
4. Press `[Scan to Media]` > `[Options]` > `[Auto Crop]`.
5. Press `[On]`.
6. Press `[OK]`.
7. Press `[Start]`.
   The machine starts scanning. Follow the LCD instructions to complete the scanning job.

Related Information

- Scan Using the Scan Button on Your Brother Machine

Scan to an Editable Text File Using OCR

Related Models: DCP-J772DW/MFC-J491DW/MFC-J690DW/MFC-J890DW

Your machine can convert characters in a scanned document to text using optical character recognition (OCR) technology. You can edit this text using your preferred text-editing application.

- The Scan to OCR feature is available for certain languages.
- Use the Scan button on the machine to make temporary changes to the scan settings. To make permanent changes, use either ControlCenter4 (Windows) or Brother iPrint&Scan (Mac) software.

>> MFC-J491DW
>> DCP-J772DW/MFC-J690DW/MFC-J890DW

MFC-J491DW

1. Load your document.
2. Press (**SCAN**).
3. Press ▲ or ▼ to select the `[to PC]` option, and then press **OK**.
4. Press ▲ or ▼ to select the `[to OCR]` option, and then press **OK**.
5. If the machine is connected over the network, press ▲ or ▼ to select the computer where you want to send data, and then press **OK**.

If the LCD prompts you to enter a PIN, use the control panel to enter the four-digit PIN for the computer, and then press **OK**.

6. Do one of the following:
   - To change the settings, go to the next step.
   - To use the default settings, press **Mono Start** or **Colour Start**.

`[Scan Type]` depends on the default settings. Pressing **Mono Start** or **Colour Start** does not allow you to change the settings.

7. Press ▲ or ▼ to select the `[Scan Settings]` setting, and then press **OK**.

To use the `[Scan Settings]` option, a computer with either ControlCenter4 (Windows) or Brother iPrint&Scan (Mac) software installed must be connected to the machine.

8. Press ▲ or ▼ to select the `[Set at Device]` setting, and then press **OK**.
9. Select the scan settings you want to change, and then press **OK**.

Option	Description
Scan Type	Select the scan type for your document.
Resolution	Select the scan resolution for your document.
File Type	Select the file format for your document.
Document Size	Select your document size.
Brightness	Select the brightness level.
Contrast	Select the contrast level.
Remove Background	Change the amount of background colour that is removed.

10. Press **Mono Start** or **Colour Start**.

[Scan Type] depends on the settings you have selected. Pressing **Mono Start** or **Colour Start** does not allow you to change the settings.

DCP-J772DW/MFC-J690DW/MFC-J890DW

1. Load your document.
2. Press [Scan] > [to PC] > [to OCR].
3. If the machine is connected over the network, press ▲ or ▼ to display the computer where you want to send data, and then press the computer name.

If the LCD prompts you to enter a PIN, use the LCD to enter the four-digit PIN for the computer, and then press [OK].

4. Do one of the following:
   - To change the settings, press [Options] or [Set at Device].
   - Press [Start] to start scanning without changing additional settings.

     The machine starts scanning. If using the machine's scanner glass, follow the LCD instructions to complete the scanning job.

To use the [Options] or [Set at Device] setting, a computer with either ControlCenter4 (Windows) or Brother iPrint&Scan (Mac) software installed must be connected to the machine.

5. Select the scan settings you want to change, and then press [OK].

Option	Description
Scan Type	Select the scan type for your document.
Resolution	Select the scan resolution for your document.
File Type	Select the file format for your document.
Document Size	Select your document size.
Brightness	Select the brightness level.
Contrast	Select the contrast level.
Remove Background Colour	Change the amount of background colour that is removed.

- To save the settings as a shortcut, press [Save as Shortcut]. You will be asked if you want to make this a One Touch Shortcut. Follow the LCD instructions.

6. Press [Start].

   The machine starts scanning. If using the machine's scanner glass, follow the LCD instructions to complete the scanning job.

Related Information

- Scan Using the Scan Button on Your Brother Machine

Scan to Email Attachment

Send a scanned document as an email attachment.

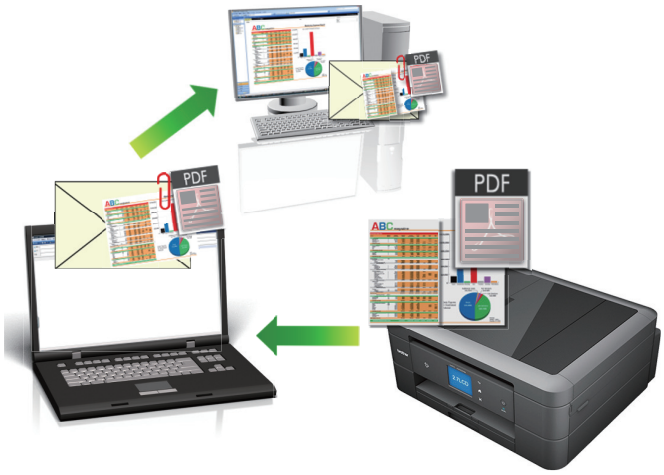

- Use the Scan button on the machine to make temporary changes to the scan settings. To make permanent changes, use either ControlCenter4 (Windows) or Brother iPrint&Scan (Mac) software.
- The Scan to Email feature does not support Webmail services. Use the Scan to Image or Scan to File feature to scan a document or a picture, and then attach the scanned file to an email message.

>> DCP-J572DW/MFC-J491DW
>> DCP-J772DW/MFC-J690DW/MFC-J890DW

DCP-J572DW/MFC-J491DW

1. Load your document.
2. Press (**SCAN**).
3. Press ▲ or ▼ to select the `[to PC]` option, and then press **OK**.
4. Press ▲ or ▼ to select the `[to E-mail]` option, and then press **OK**.
5. If the machine is connected over the network, press ▲ or ▼ to select the computer where you want to send data, and then press **OK**.

If the LCD prompts you to enter a PIN, use the control panel to enter the four-digit PIN for the computer, and then press **OK**.

6. Do one of the following:
   - To change the settings, go to the next step.
   - To use the default settings, press **Mono Start** or **Colour Start**.

`[Scan Type]` depends on the default settings. Pressing **Mono Start** or **Colour Start** does not allow you to change the settings.

7. Press ▲ or ▼ to select the `[Scan Settings]` setting, and then press **OK**.

To use the `[Scan Settings]` option, a computer with either ControlCenter4 (Windows) or Brother iPrint&Scan (Mac) software installed must be connected to the machine.

8. Press ▲ or ▼ to select the `[Set at Device]` setting, and then press **OK**.
9. Select the scan settings you want to change, and then press **OK**.

Option	Description
Scan Type	Select the scan type for your document.
Resolution	Select the scan resolution for your document.
File Type	Select the file format for your document.
Document Size	Select your document size.
Brightness	Select the brightness level.
Contrast	Select the contrast level.
Remove Background	Change the amount of background colour that is removed.

10. Press **Mono Start** or **Colour Start**.

[Scan Type] depends on the settings you have selected. Pressing **Mono Start** or **Colour Start** does not allow you to change the settings.

DCP-J772DW/MFC-J690DW/MFC-J890DW

1. Load your document.
2. Press [Scan] > [to PC] > [to E-mail].
3. If the machine is connected over the network, press ▲ or ▼ to display the computer where you want to send data, and then press the computer name.

If the LCD prompts you to enter a PIN, use the LCD to enter the four-digit PIN for the computer, and then press [OK].

4. Do one of the following:
   - To change the settings, press [Options] or [Set at Device].
   - Press [Start] to start scanning without changing additional settings.

     The machine scans the document and saves it as a file attachment. It then launches your email application and opens a new, blank email message with the scanned file attached.

To use the [Options] or [Set at Device] setting, a computer with either ControlCenter4 (Windows) or Brother iPrint&Scan (Mac) software installed must be connected to the machine.

5. Select the scan settings you want to change, and then press [OK].

Option	Description
Scan Type	Select the scan type for your document.
Resolution	Select the scan resolution for your document.
File Type	Select the file format for your document.
Document Size	Select your document size.
Brightness	Select the brightness level.
Contrast	Select the contrast level.
Remove Background Colour	Change the amount of background colour that is removed.

- To save the settings as a shortcut, press [Save as Shortcut]. You will be asked if you want to make this a One Touch Shortcut. Follow the LCD instructions.

6. Press [Start].

   The machine scans the document and saves it as a file attachment. It then launches your email application and opens a new, blank email message with the scanned file attached.

Related Information

- Scan Using the Scan Button on Your Brother Machine

Web Services for Scanning on Your Network (Windows 7, Windows 8 and Windows 10)

The Web Services protocol enables Windows 7, Windows 8 and Windows 10 users to scan using a Brother machine on the network. You must install the driver via Web Services.

- Use Web Services to Install Drivers Used for Scanning (Windows 7, Windows 8, and Windows 10)
- Scan Using Web Services from the Brother Machine (Windows 7, Windows 8 and Windows 10)
- Configure Scan Settings for Web Services

Use Web Services to Install Drivers Used for Scanning (Windows 7, Windows 8, and Windows 10)

Use Web Services to monitor printers on the network.

- Make sure you have installed the Brother software and drivers.
- Verify that the host computer and the Brother machine are on the same subnet, or that the router is correctly configured to pass data between the two devices.
- You must configure the IP address on your Brother machine before you configure this setting.

1. Do one of the following:
   - Windows 7

     Click **(Start)** > **Control Panel** > **Network and Internet** > **View network computers and devices**.

     The machine's Web Services Name appears with the printer icon.

     Right-click the machine you want to install.
   - Windows 8

     Move your mouse to the lower right corner of your desktop. When the menu bar appears, click **Settings** > **Change PC settings** > **Devices** > **Add a device**.

     The machine's Web Services Name appears.
   - Windows 8.1

     Move your mouse to the lower right corner of your desktop. When the menu bar appears, click **Settings** > **Change PC settings** > **PC and devices** > **Devices** > **Add a device**.

     The machine's Web Services Name appears.
   - Windows 10

     Click > **Windows System** > **Control Panel**. In the **Hardware and Sound** group, click **Add a device**.

- The Web Services Name for the Brother machine is your model name and the MAC Address (Ethernet Address) of your machine (for example, Brother MFC-XXXX (model name) [XXXXXXXXXXXX] (MAC Address / Ethernet Address)).
- Windows 8/Windows 10

  Move your mouse over the machine name to display the machine's information.

2. Do one of the following:
   - Windows 7

     Click **Install** in the displayed menu.
   - Windows 8/Windows 10

     Select the machine you want to install, and then follow the on-screen instructions.

To uninstall drivers, click **Uninstall** or (**Remove device**).

Related Information

- Web Services for Scanning on Your Network (Windows 7, Windows 8 and Windows 10)

Scan Using Web Services from the Brother Machine (Windows 7, Windows 8 and Windows 10)

If you have installed the driver for scanning via Web Services, you can access the Web Services scanning menu on your Brother machine's LCD.

- Certain characters in the messages displayed on the LCD may be replaced with spaces if the language settings of your OS and your Brother machine are different.
- If the LCD displays an insufficient memory error message, choose a smaller size in the **Paper size** setting or a lower resolution in the **Resolution (DPI)** setting.

>> DCP-J572DW/MFC-J491DW
>> DCP-J772DW/MFC-J690DW/MFC-J890DW

DCP-J572DW/MFC-J491DW

1. Load your document.
2. Press (**SCAN**).
3. Press ▲ or ▼ to select the following:
   a. Select `[WS Scan]`. Press **OK**.
   b. Select the type of scan you want. Press **OK**.
   c. Select the computer where you want to send data. Press **OK**.
4. Press **Mono Start** or **Colour Start**.
   The machine starts scanning.

DCP-J772DW/MFC-J690DW/MFC-J890DW

1. Load your document.
2. Press `[Scan]` > `[WS Scan]`.
3. Press ▲ or ▼ to select the type of scan you want, and then press it.
4. Press ▲ or ▼ to display the computer where you want to send data, and then press the computer name.
5. Press `[Start]`.
   The machine starts scanning.

Related Information

- Web Services for Scanning on Your Network (Windows 7, Windows 8 and Windows 10)

Configure Scan Settings for Web Services

1. Do one of the following:
   - Windows 7

     Click **(Start)** > **Devices and Printers**.
   - Windows 8

     Move your mouse to the lower right corner of your desktop. When the menu bar appears, click **Settings**, and then click **Control Panel**. In the **Hardware and Sound** group, click **View devices and printers**.
   - Windows 10

     Click > **Windows System** > **Control Panel**. In the **Hardware and Sound** group, click **View devices and printers**.
2. Right-click the machine icon, and then select **Scan profiles...**. The **Scan Profiles** dialog box appears.
3. Select the scan profile you want to use.
4. Make sure the scanner selected in the **Scanner** list is a Brother machine that supports Web Services for scanning, and then click the **Set as Default** button.
5. Click **Edit...**.

   The **Edit Default Profile** dialog box appears.
6. Select the **Source**, **Paper size**, **Color format**, **File type**, **Resolution (DPI)**, **Brightness** and **Contrast** settings.
7. Click the **Save Profile** button.

   These settings will be applied when you scan using the Web Services protocol.

If you are requested to select a scanning application, select Windows Fax and Scan from the list.

Related Information

- Web Services for Scanning on Your Network (Windows 7, Windows 8 and Windows 10)

Change Scan Button Settings from ControlCenter4 (Windows)

1. Click the (**ControlCenter4**) icon in the task tray, and then click **Open**.
2. Click the **Device Settings** tab.
3. Click the **Device Scan Settings** button.

   The **Device Scan Settings** dialog box appears.

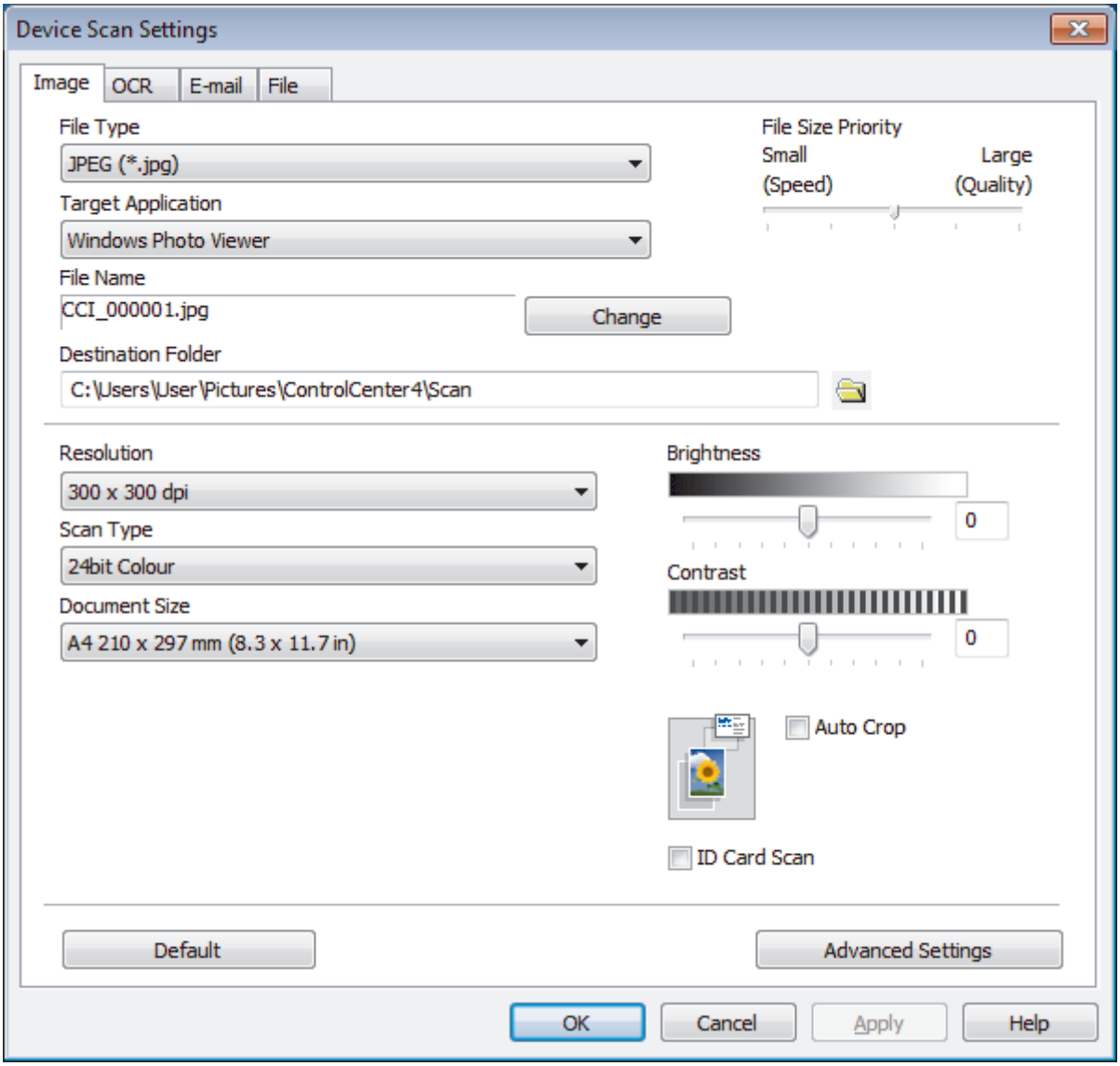

4. Click the tab for the Scan to action you want to change (**Image**, **OCR**, **E-mail**, or **File**).
5. Change the settings, as needed.
6. Click **OK**.

Each tab corresponds to a scan feature, as described below.

These settings can be changed.

Click the tabs, and then change the settings.

Tab Name	Corresponding Feature
Image	Scan to Image
OCR	Scan to OCR
E-mail	Scan to Email
File	Scan to File

Settings	Applicable Features			
	Image	**OCR**	**E-mail**	**File**
File Type	Yes	Yes	Yes	Yes
Target Application	Yes	Yes	-	-
OCR Language (Available only for certain models)	-	Yes	-	-
File Name	Yes	Yes	Yes	Yes
Destination Folder	Yes	Yes	Yes	-
Scan Location	-	-	-	Yes
File Size Priority	Yes	-	Yes	Yes
Resolution	Yes	Yes	Yes	Yes
Scan Type	Yes	Yes	Yes	Yes
Document Size	Yes	Yes	Yes	Yes
Brightness	Yes	Yes	Yes	Yes
Contrast	Yes	Yes	Yes	Yes
Auto Crop	Yes	-	Yes	Yes
ID Card Scan	Yes	Yes	Yes	Yes
Advanced Settings	Yes	Yes	Yes	Yes
Default	Yes	Yes	Yes	Yes

File Type

Select the file type you want to use for the scanned data.

Target Application

Select the destination application from the drop-down list.

OCR Language

Set the optical character recognition (OCR) language to match the language of the scanned document's text (Available only for certain models).

File Name

Type a prefix for your file name, if needed.

Destination Folder

Click the folder icon to browse and select the folder where you want to save your scanned documents.

Scan Location

Select the **Folder** or **SharePoint** radio button to specify the destination where you want to save your scanned documents.

File Size Priority

Adjust the data compression ratio of the scanned image. Change the file size by moving the **File Size Priority** slider to the right or left.

Resolution

Select a scanning resolution from the **Resolution** drop-down list. Higher resolutions take more memory and transfer time, but produce a finer scanned image.

Scan Type

Select from a range of scan colour depths.

- **Auto**

  Use for any type of document. This mode automatically picks an appropriate colour depth for the document.

- **Black & White**

  Use for text or line art images.

- **Grey (Error Diffusion)**

  Use for photographic images or graphics. (Error Diffusion is a method for creating simulated grey images without using true grey dots. Black dots are put in a specific pattern to give a grey appearance.)

- **True Grey**

  Use for photographic images or graphics. This mode is more accurate because it uses up to 256 shades of grey.

- **24bit Colour**

  Use to create an image with the most accurate colour reproduction. This mode uses up to 16.8 million colours to scan the image, but it requires the most memory and has the longest transfer time.

Document Size

Select the exact size of your document from the **Document Size** drop-down list.

- If you select the **1 to 2 (A4)** option, the scanned image will be divided into two A5-size documents.

Brightness

Set the **Brightness** level by dragging the slider to the right or left to lighten or darken the image. If the scanned image is too light, set a lower brightness level and scan the document again. If the image is too dark, set a higher brightness level and scan the document again. You can also type a value into the field to set the **Brightness** level.

Contrast

Increase or decrease the **Contrast** level by moving the slider to the right or left. An increase emphasises dark and light areas of the image, while a decrease reveals more details in grey areas. You can also type a value into the field to set the **Contrast** level.

Auto Crop

Scan multiple documents placed on the scanner glass. The machine will scan each document and create separate files or a single multi-page file.

ID Card Scan

Select this check box to scan both sides of an identification card onto one page.

Advanced Settings

Click the **Advanced Settings** button in the scan settings dialog box to configure advanced settings.

- **Remove Bleed-through / Pattern**
  - **Remove Background Colour**

    Remove the base colour of documents to make the scanned data more legible.

- **Rotate Image**

  Rotate the scanned image.

- **Skip Blank Page**

  Remove the document's blank pages from the scanning results.

- **Display Scanning Results**

  Show on your computer screen the number of total pages saved, and blank pages skipped.

Default

Select this option to restore all settings to their factory setting values.

Related Information

- Scan Using the Scan Button on Your Brother Machine

Change Scan Button Settings from Brother iPrint&Scan (Mac)

1. In the **Finder** menu bar, click **Go** > **Applications**, and then double-click the iPrint&Scan icon.

   The Brother iPrint&Scan screen appears.
2. If your Brother machine is not selected, click the **Select your Machine** button, and then follow the on-screen instructions to select your Brother machine.
3. Click the **Machine Scan Settings** button, and then follow the on-screen instructions to change the scan settings.

Related Information

- Scan Using the Scan Button on Your Brother Machine
- Scan Using Brother iPrint&Scan (Mac)

Scan from Your Computer (Windows)

There are several ways you can use your computer to scan photos and documents on your Brother machine. Use the software applications provided by Brother, or use your favourite scanning application.

- Scan Using ControlCenter4 Home Mode (Windows)
- Scan Using ControlCenter4 Advanced Mode (Windows)
- Scan Using Nuance™ PaperPort™ 14SE or Other Windows Applications
- Scan Using Windows Fax and Scan
- Install BookScan Enhancer and Whiteboard Enhancer (Windows)

Scan Using ControlCenter4 Home Mode (Windows)

Use ControlCenter4 Home Mode to access your machine's main features.

- Scan Using ControlCenter4 Home Mode (Windows)
- Save Scanned Data to a Folder as a PDF File Using ControlCenter4 Home Mode (Windows)
- Scan Settings for ControlCenter4 Home Mode (Windows)
- Change the Operation Mode in ControlCenter4 (Windows)

Scan Using ControlCenter4 Home Mode (Windows)

Select **Home Mode** as the mode setting for ControlCenter4.

1. Load your document.
2. Click the (**ControlCenter4**) icon in the task tray, and then click **Open**.
3. Click the **Scan** tab.

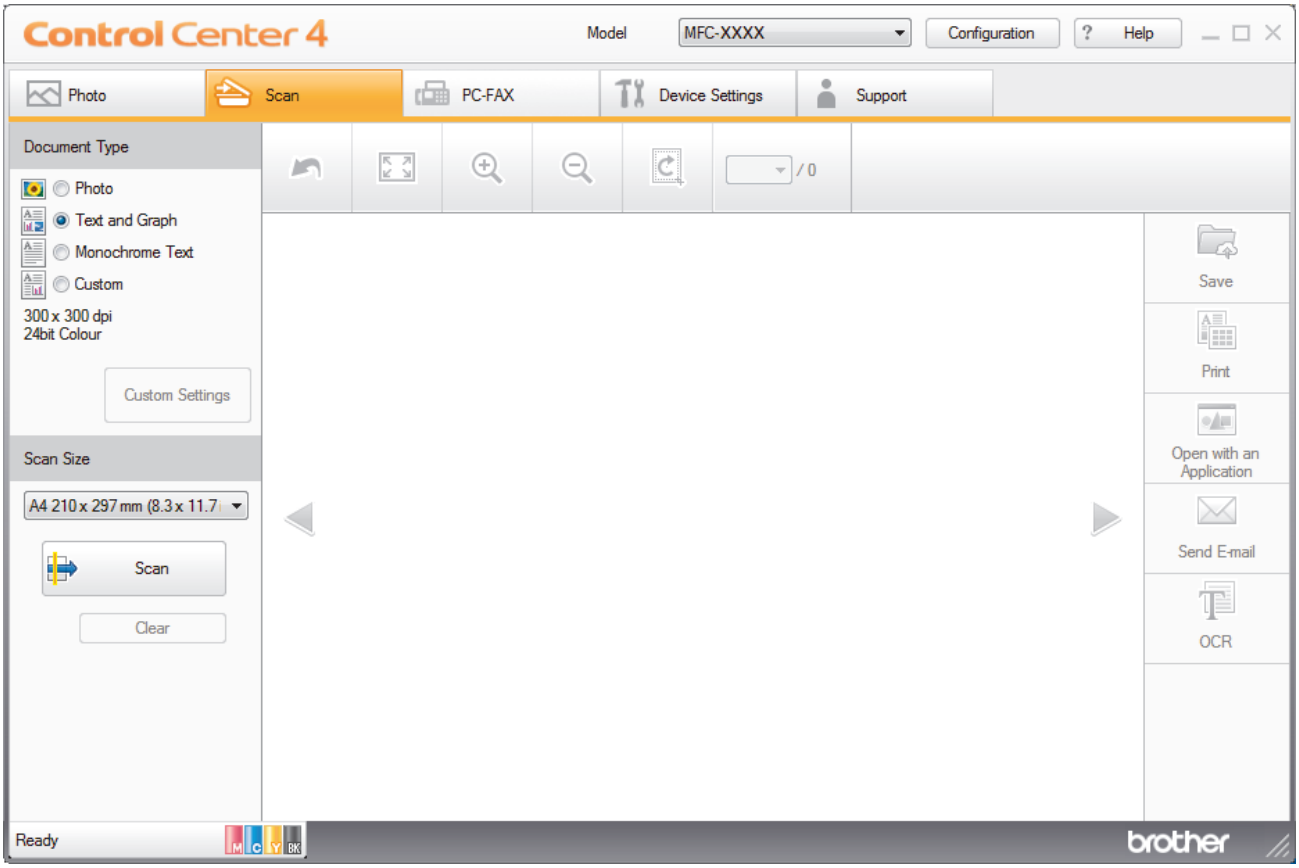

4. Select the **Document Type**.
5. Change the document's **Scan Size**, if needed.
6. Click (**Scan**).

   The machine starts scanning, and the scanned image appears in the image viewer.
7. If you scanned multiple pages using the ADF, click the left or right arrow buttons to preview each scanned page. (ADF models only)
8. Crop the scanned image, if needed.
9. Do one of the following:
   - Click (**Save**) to save scanned data.
   - Click (**Print**) to print scanned data.
   - Click (**Open with an Application**) to open scanned data in another application.
   - Click (**Send E-mail**) to attach scanned data to an email.
   - Click (**OCR**) to convert your scanned document to an editable text file. (available only for certain models)

Related Information

- Scan Using ControlCenter4 Home Mode (Windows)
- Select Document Type Using ControlCenter4 Home Mode (Windows)
- Change Scan Size Using ControlCenter4 Home Mode (Windows)
- Crop a Scanned Image Using ControlCenter4 Home Mode (Windows)
- Print Scanned Data Using ControlCenter4 Home Mode (Windows)
- Open with an Application Using ControlCenter4 Home Mode (Windows)

Select Document Type Using ControlCenter4 Home Mode (Windows)

- Select the **Document Type** option that matches the type of original you want to scan.

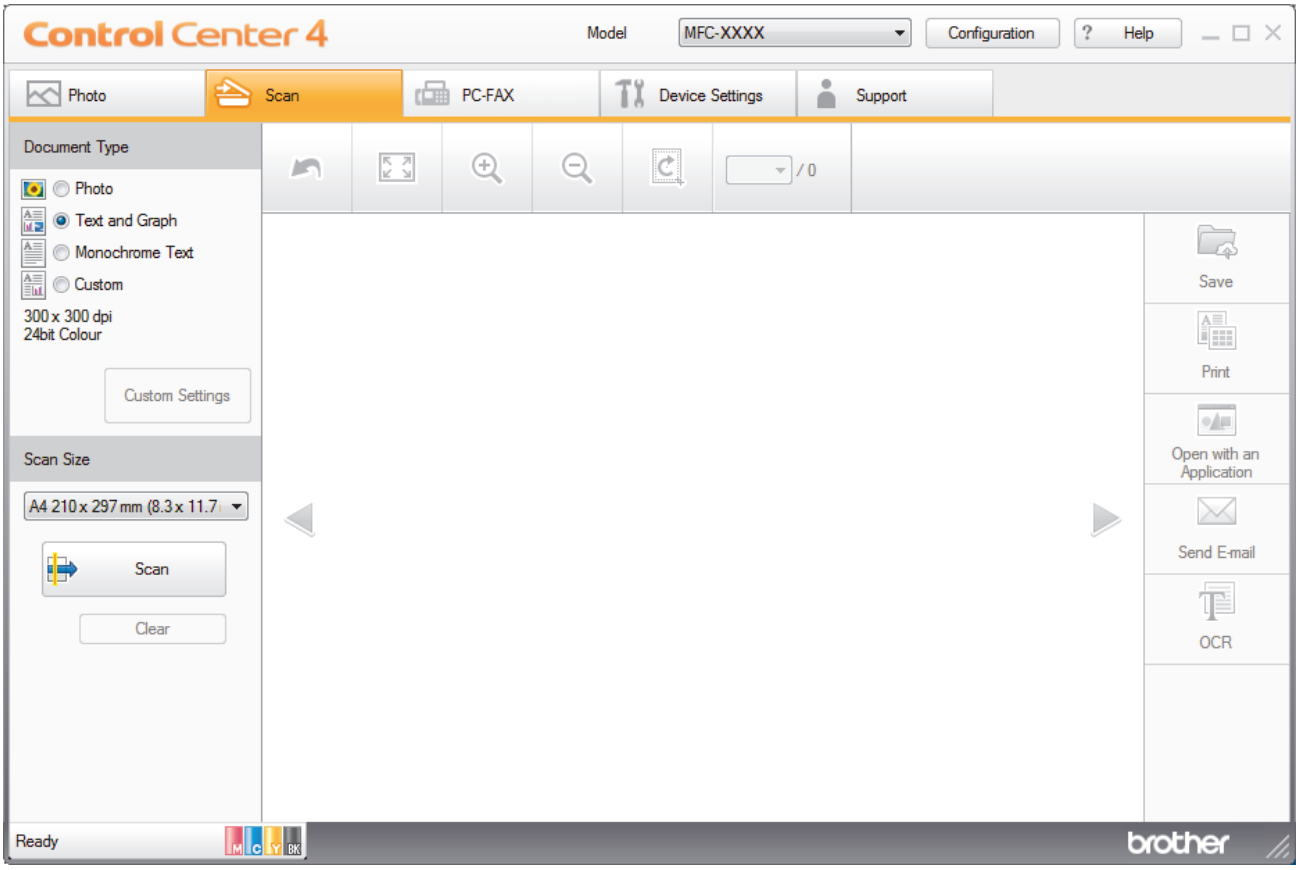

Option	Description
Photo	**600 x 600 dpi 24bit Colour**
Text and Graph	**300 x 300 dpi 24bit Colour**
Monochrome Text	**200 x 200 dpi Black & White**
Custom	**300 x 300 dpi** (**24bit Colour** as default) Select the scan settings you want from the **Custom Settings** button.

Related Information

- Scan Using ControlCenter4 Home Mode (Windows)
- Custom Scan Settings (Windows)

Custom Scan Settings (Windows)

Select **Custom** in the **Document Type** list to change advanced scan settings.

- Select **Custom**, and then click the **Custom Settings** button.

  The **Custom Scan Settings** dialog box appears.

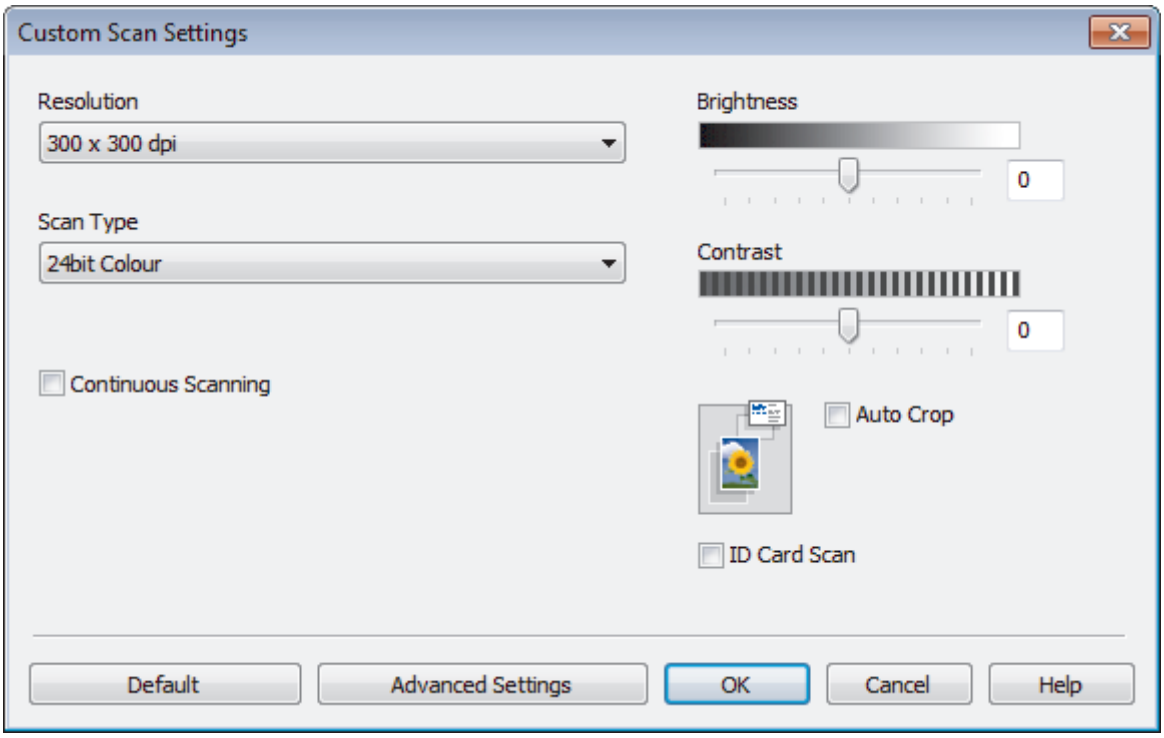

You can change the following settings:

Resolution

Select a scanning resolution from the **Resolution** drop-down list. Higher resolutions take more memory and transfer time, but produce a finer scanned image.

Scan Type

Select from a range of scan colour depths.

- **Auto**

  Use for any type of document. This mode automatically picks an appropriate colour depth for the document.

- **Black & White**

  Use for text or line art images.

- **Grey (Error Diffusion)**

  Use for photographic images or graphics. (Error Diffusion is a method for creating simulated grey images without using true grey dots. Black dots are put in a specific pattern to give a grey appearance.)

- **True Grey**

  Use for photographic images or graphics. This mode is more accurate because it uses up to 256 shades of grey.

- **24bit Colour**

  Use to create an image with the most accurate colour reproduction. This mode uses up to 16.8 million colours to scan the image, but it requires the most memory and has the longest transfer time.

Brightness

Set the **Brightness** level by dragging the slider to the right or left to lighten or darken the image. If the scanned image is too light, set a lower brightness level and scan the document again. If the image is too dark, set a higher brightness level and scan the document again. You can also type a value into the field to set the **Brightness** level.

Contrast

Increase or decrease the **Contrast** level by moving the slider to the right or left. An increase emphasises dark and light areas of the image, while a decrease reveals more details in grey areas. You can also type a value into the field to set the **Contrast** level.

Auto Crop

Scan multiple documents placed on the scanner glass. The machine will scan each document and create separate files or a single multi-page file.

Continuous Scanning

Select this option to scan multiple pages. After a page is scanned, select either continue scanning or finish.

ID Card Scan

Select this check box to scan both sides of an identification card onto one page.

Advanced Settings

Configure advanced settings by clicking the **Advanced Settings** button in the Scan Settings dialog box.

- **Remove Bleed-through / Pattern**
  - **Remove Background Colour**

    Remove the base colour of documents to make the scanned data more legible. (Available only for certain models)
- **Rotate Image**

  Rotate the scanned image.
- **Skip Blank Page**

  Remove the document's blank pages from the scanning results.
- **Display Scanning Results**

  Show on your computer screen the number of total pages saved, and blank pages skipped.

Related Information

- Select Document Type Using ControlCenter4 Home Mode (Windows)

Change Scan Size Using ControlCenter4 Home Mode (Windows)

For faster scan speeds, select the exact size of your document from the **Scan Size** drop-down menu.

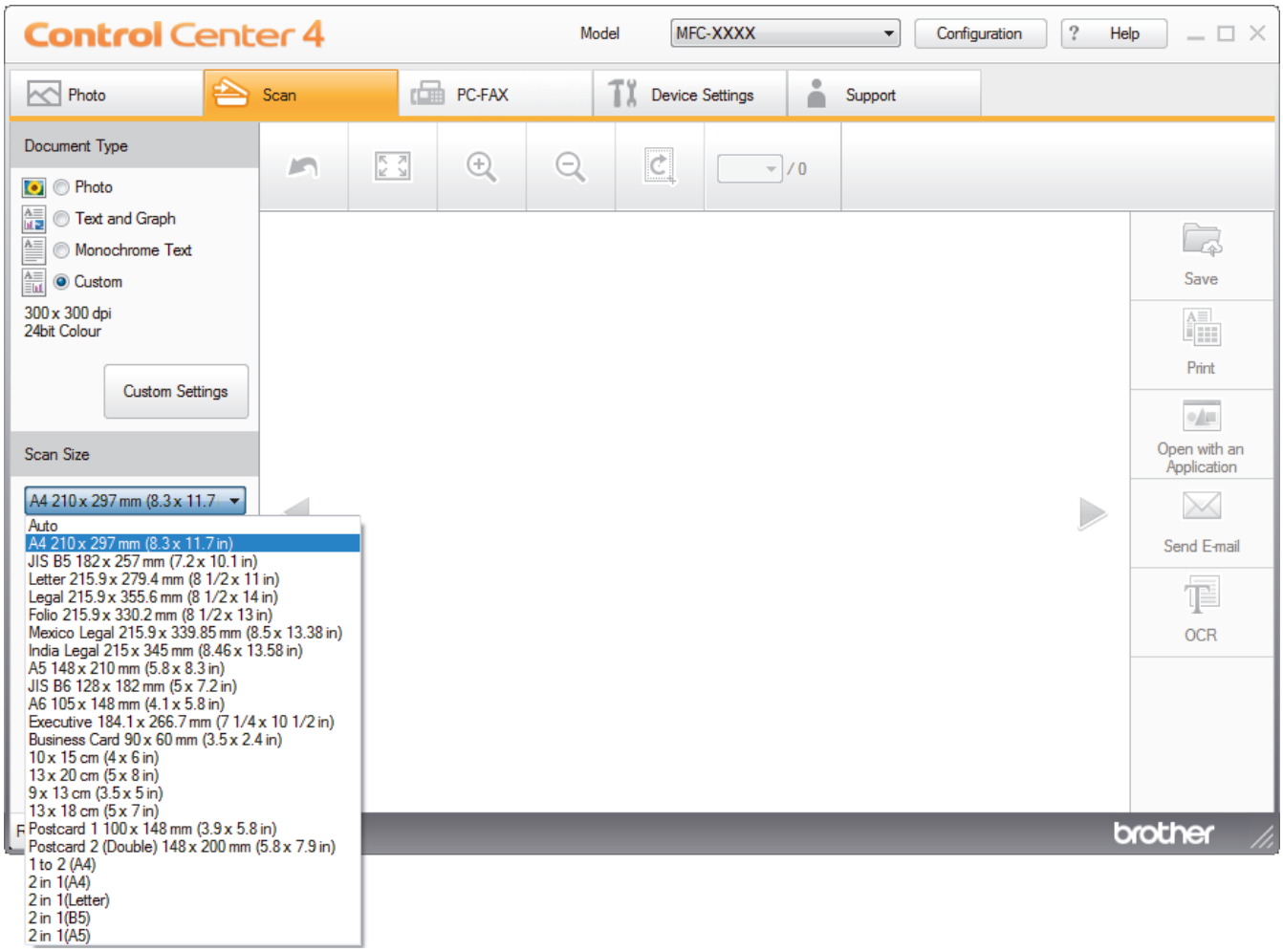

Related Information

- Scan Using ControlCenter4 Home Mode (Windows)

Crop a Scanned Image Using ControlCenter4 Home Mode (Windows)

The crop tool on the Image Editing Toolbar lets you trim unwanted areas from your scanned image. Use the **Zoom In** and **Zoom Out** tools to help view the image to be cropped.

Image Editing Toolbar

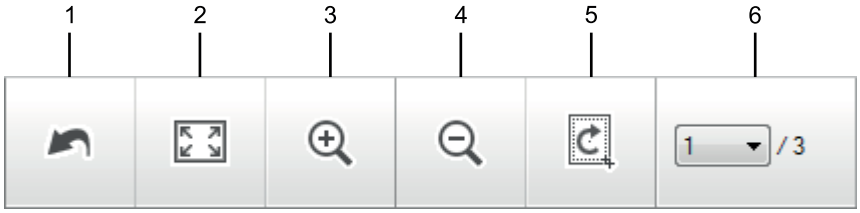

1. **Restart**

   Cancels all the edits applied to the selected image. The edited image returns to its original state.
2. **Fit to Window**

   Displays the scanned image so that the entire image fits in the window.
3. **Zoom In**

   Zooms in on the scanned image.
4. **Zoom Out**

   Zooms out of the scanned image.
5. **Crop and Edit**

   Removes the outer parts of the image. Click the **Crop and Edit** button, and then change the frame to contain the area you want to keep after cropping.
6. **Page Counter**

   Indicates the page number of the scanned page currently shown in the image viewer. To display a different page, select the desired page number from the drop-down page number list.

If you have scanned multiple pages, you can see the next or previous scanned page by clicking the left or right arrow buttons in the preview window.

1. Scan a document.
2. Click (**Crop and Edit**) to edit the scanned image.

   The **Crop and Edit - ControlCenter4** window appears.

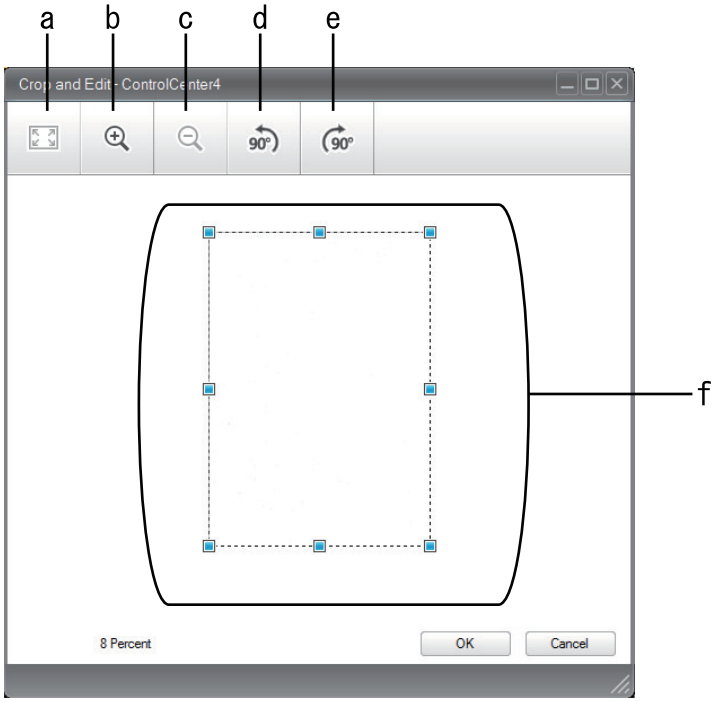

a. Expands the scanned image so that the entire image fits in the window.
b. Zooms in on the image.
c. Zooms out of the image.
d. Rotates the image counter-clockwise 90 degrees.
e. Rotates the image clockwise 90 degrees.
f. Click and drag the frame to adjust the area to be cropped.

3. Click **OK**.
   The edited image appears in the image viewer.

Related Information

- Scan Using ControlCenter4 Home Mode (Windows)

Print Scanned Data Using ControlCenter4 Home Mode (Windows)

Scan a document on your Brother machine, and then print copies using the printer driver features that are available in ControlCenter4.

1. Scan a document.
2. Click **Print**.

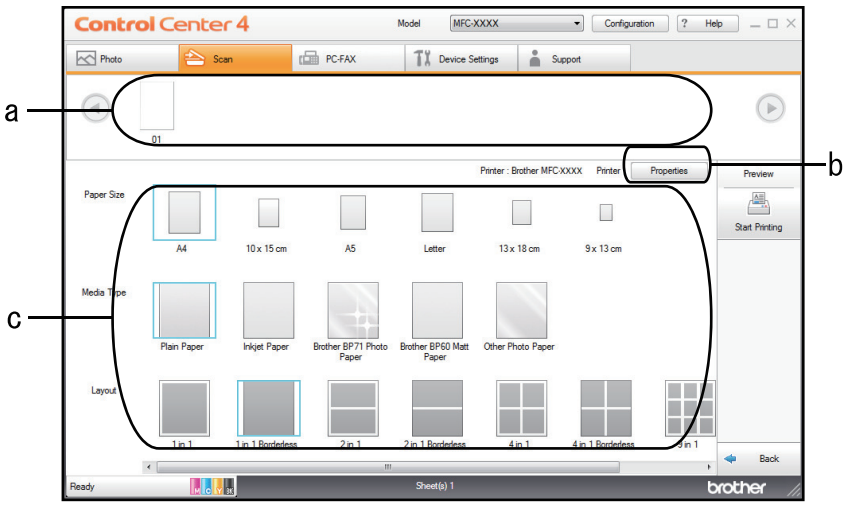

a. Shows which images are currently selected.

b. Click the **Properties** button to change specific printer settings.

c. Select the **Paper Size**, **Media Type** and **Layout** options. The current settings are enclosed in a blue square.

3. Configure the print settings, and then click the **Start Printing** button.

Related Information

- Scan Using ControlCenter4 Home Mode (Windows)

Open with an Application Using ControlCenter4 Home Mode (Windows)

The **Open with an Application** button lets you scan an image directly into your graphics application for editing.

1. Click the **Open with an Application** button.
2. Select the application from the drop-down list, and then click **OK**.

   The image will be opened in the application you have selected.

Related Information

- Scan Using ControlCenter4 Home Mode (Windows)

Save Scanned Data to a Folder as a PDF File Using ControlCenter4 Home Mode (Windows)

Select **Home Mode** as the mode setting for ControlCenter4.

1. Load your document.
2. Click the (**ControlCenter4**) icon in the task tray, and then click **Open**.
3. Click the **Scan** tab.

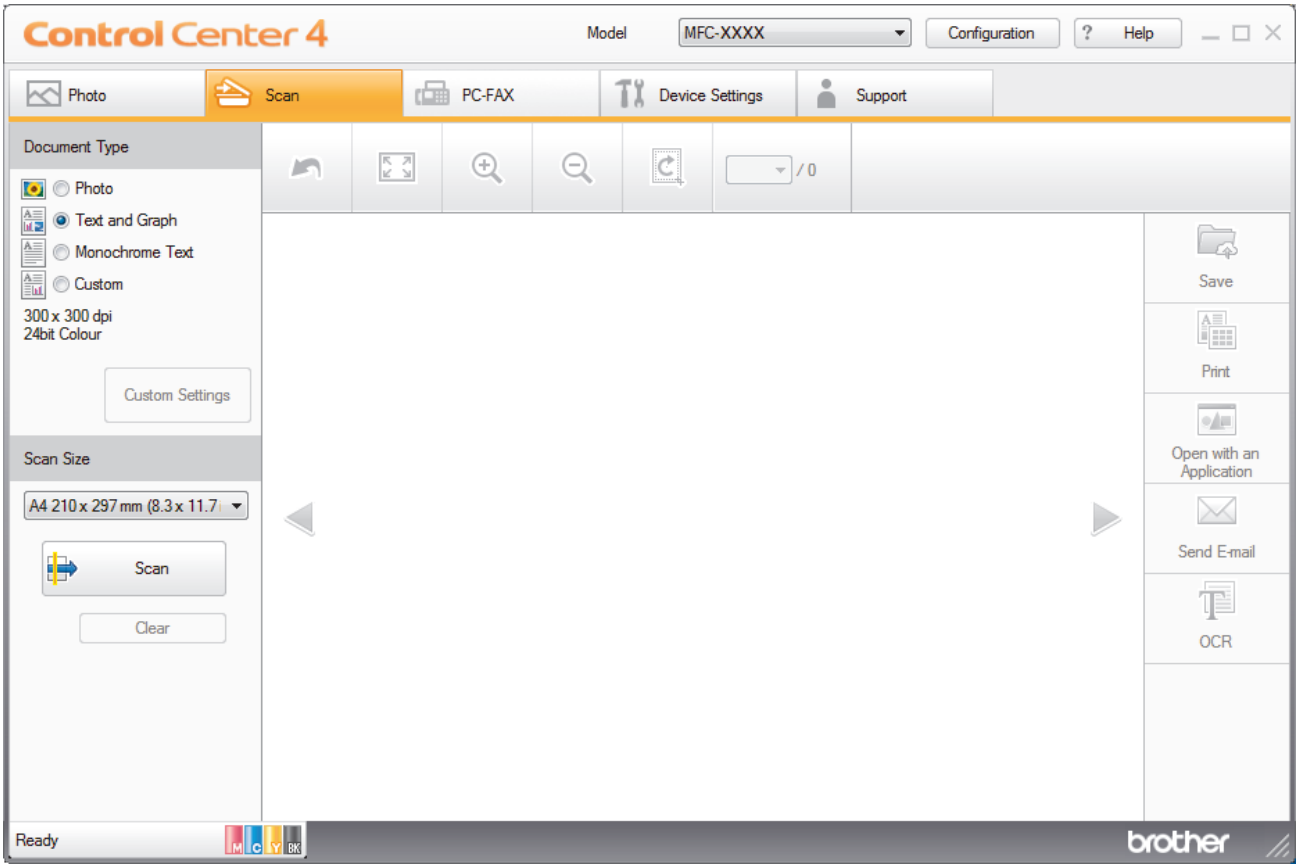

4. Select the **Document Type**.
5. Change the size of your document, if needed.
6. Click (**Scan**).

   The machine starts scanning, and the scanned image appears in the image viewer.
7. Click the left or right arrow buttons to preview each scanned page.
8. Click **Save**.

   The **Save** dialog box appears.
9. Click the **File Type** drop-down list, and then select a PDF file.

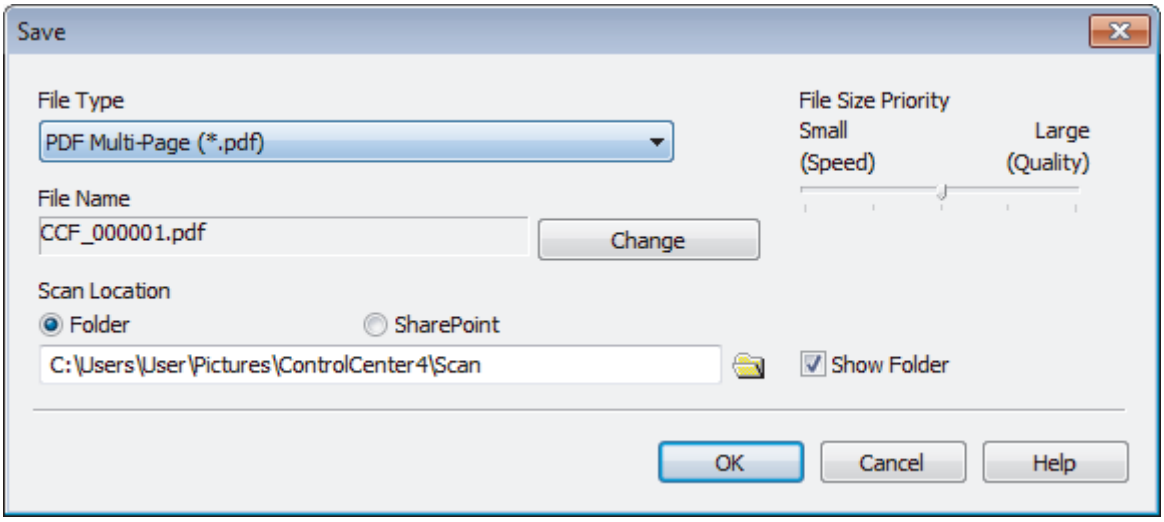

To save the document as a password-protected PDF, select **Secure PDF Single-Page (*.pdf)** or **Secure PDF Multi-Page (*.pdf)** from the **File Type** drop-down list, click , and then type the password.

10. To change the file name, click the **Change** button, if needed.
11. Click the folder icon to browse and select the folder where you want to save your scanned documents.
12. Click **OK**.

    The scanned document is saved to the destination folder as a PDF.

Related Information

- Scan Using ControlCenter4 Home Mode (Windows)

Scan Settings for ControlCenter4 Home Mode (Windows)

Settings	Applicable Features			
	Open with an Application	OCR	Send E-mail	Save
File Type	-	Yes	Yes	Yes
Target Application	Yes	Yes	-	-
OCR Language (Available only for certain models)	-	Yes	-	-
File Name	-	-	-	Yes
Scan Location	-	-	-	Yes
Show Folder	-	-	-	Yes
File Size Priority	-	-	Yes	Yes

File Type

Select the file type you want to use for the scanned data.

For **Send E-mail** and **Save**:

- **Windows Bitmap (*.bmp)**
- **JPEG (*.jpg)** (recommended for most users when scanning pictures)
- **TIFF Single-Page (*.tif)**
- **TIFF Multi-Page (*.tif)**
- **Portable Network Graphics (*.png)**
- **PDF Single-Page (*.pdf)** (recommended for scanning and sharing documents)
- **PDF Multi-Page (*.pdf)** (recommended for scanning and sharing documents)
- **High Compression PDF Single-Page (*.pdf)**
- **High Compression PDF Multi-Page (*.pdf)**
- **Secure PDF Single-Page (*.pdf)**
- **Secure PDF Multi-Page (*.pdf)**
- **Searchable PDF Single-Page (*.pdf)**
- **Searchable PDF Multi-Page (*.pdf)**
- **XML Paper Specification (*.xps)** (the XML Paper Specification is available for Windows 7, Windows 8, and Windows 10, or when using applications that support XML Paper Specification files)
- **Microsoft Office Word (*.docx)** (Available only for certain models)
- **Microsoft Office PowerPoint (*.pptx)** (Available only for certain models)
- **Microsoft Office Excel (*.xlsx)** (Available only for certain models)

For **OCR**:

- **Text (*.txt)**
- **HTML 3.2 (*.htm)**
- **HTML 4.0 (*.htm)**
- **Searchable PDF Single-Page (*.pdf)**
- **Searchable PDF Multi-Page (*.pdf)**
- **WordPad (*.rtf)**
- **RTF Word 2000 (*.rtf)**
- **WordPerfect 9, 10 (*.wpd)**

- **Microsoft Excel 2003, XP (*.xls)**

Target Application

Select the destination application from the drop-down list.

OCR Language

Set the optical character recognition (OCR) language to match the language of the scanned document's text (Available only for certain models).

File Name

Click **Change** to change the file name's prefix.

Scan Location

Select the **Folder** or **SharePoint** radio button to specify the destination where you want to save your scanned documents.

Show Folder

Select this option to automatically display the destination folder after scanning.

File Size Priority

Adjust the data compression ratio of the scanned image. Change the file size by moving the **File Size Priority** slider to the right or left.

Custom Settings

Select the **Custom** option, click the **Custom Settings** button, and then change settings.

Scan Size

Select the exact size of your document from the **Scan Size** drop-down menu.

Related Information

- Scan Using ControlCenter4 Home Mode (Windows)

Scan Using ControlCenter4 Advanced Mode (Windows)

ControlCenter4 Advanced Mode gives you more control over the details of your machine's features and allows you to customise one-button scan actions.

- Scan Photos and Graphics Using ControlCenter4 Advanced Mode (Windows)
- Save Scanned Data to a Folder as a PDF File Using ControlCenter4 Advanced Mode (Windows)
- Scan Both Sides of an ID Card Using ControlCenter4 Advanced Mode (Windows)
- Scan to Email Attachment Using ControlCenter4 Advanced Mode (Windows)
- Scan to an Editable Text File (OCR) Using ControlCenter4 Advanced Mode (Windows)
- Scan to an Office File Using ControlCenter4 Advanced Mode (Windows)
- Scan Settings for ControlCenter4 Advanced Mode (Windows)
- Change the Operation Mode in ControlCenter4 (Windows)

Scan Photos and Graphics Using ControlCenter4 Advanced Mode (Windows)

Send scanned photos or graphics directly to your computer.

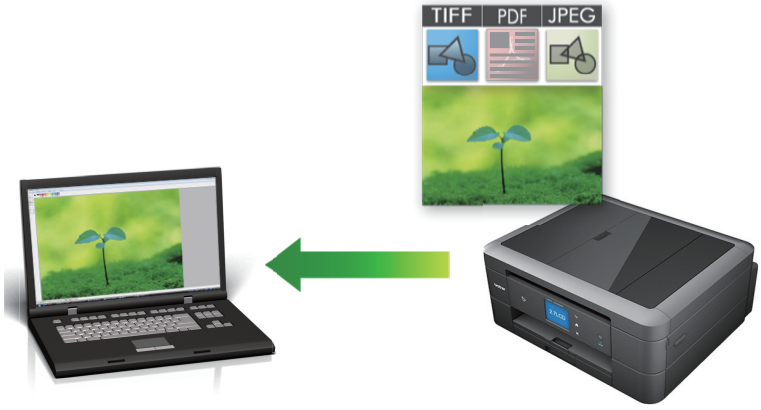

Select **Advanced Mode** as the mode setting for ControlCenter4.

1. Load your document.
2. Click the (**ControlCenter4**) icon in the task tray, and then click **Open**.
3. Click the **Scan** tab.

4. Click the **Image** button.

   The scan settings dialog box appears.

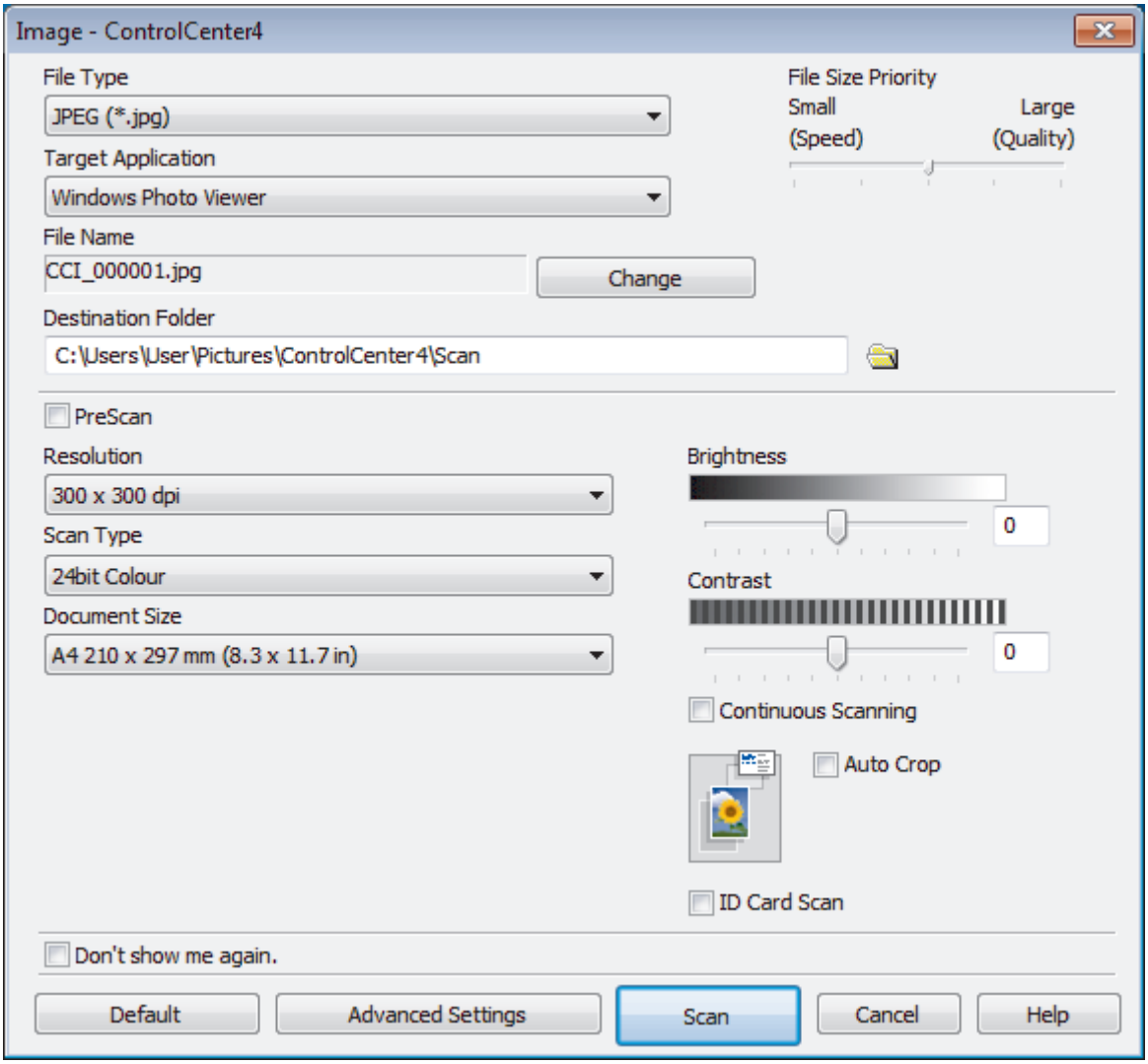

5. Change the scan settings, such as file format, file name, destination folder, resolution and colour, if needed.

- To change the file name, click **Change**.
- To change **Destination Folder**, click the folder icon.
- To preview and configure the scanned image, select the **PreScan** check box.

6. Click **Scan**.

   The machine starts scanning. The image opens in the application you have selected.

Related Information

- Scan Using ControlCenter4 Advanced Mode (Windows)

Save Scanned Data to a Folder as a PDF File Using ControlCenter4 Advanced Mode (Windows)

Scan documents and save them to a folder on your computer as PDF files.

Select **Advanced Mode** as the mode setting for ControlCenter4.

1. Load your document.
2. Click the (**ControlCenter4**) icon in the task tray, and then click **Open**.
3. Click the **Scan** tab.

4. Click the **File** button.
   The scan settings dialog box appears.

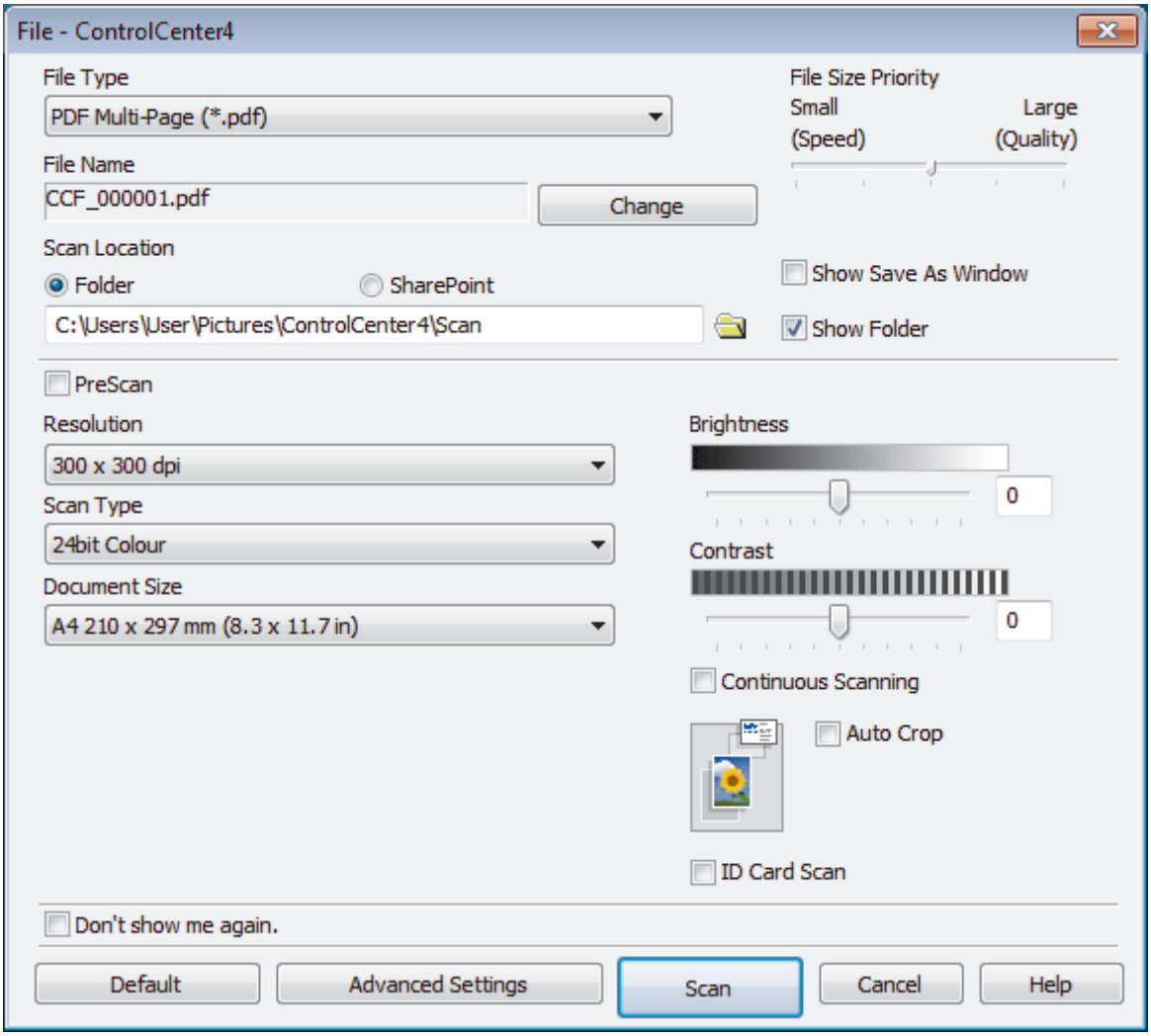

5. Click the **File Type** drop-down list, and then select a PDF file.

> To save the document as a password-protected PDF, select **Secure PDF Single-Page (*.pdf)** or **Secure PDF Multi-Page (*.pdf)** from the **File Type** drop-down list, click , and then type the password.

6. Click the folder icon to browse and select the folder where you want to save your scanned documents.
7. Change the scan settings, such as file format, file name, resolution and colour, if needed.

> To preview and configure the scanned image, select the **PreScan** check box.

8. Click **Scan**.
   The machine starts scanning. The file is saved in the folder you selected.

Related Information

- Scan Using ControlCenter4 Advanced Mode (Windows)

Scan Both Sides of an ID Card Using ControlCenter4 Advanced Mode (Windows)

Select **Advanced Mode** as the mode setting for ControlCenter4.

1. Place an ID card on the scanner glass.
2. Click the (**ControlCenter4**) icon in the task tray, and then click **Open**.
3. Click the **Scan** tab.

4. Click the **File** button.

   The scan settings dialog box appears.

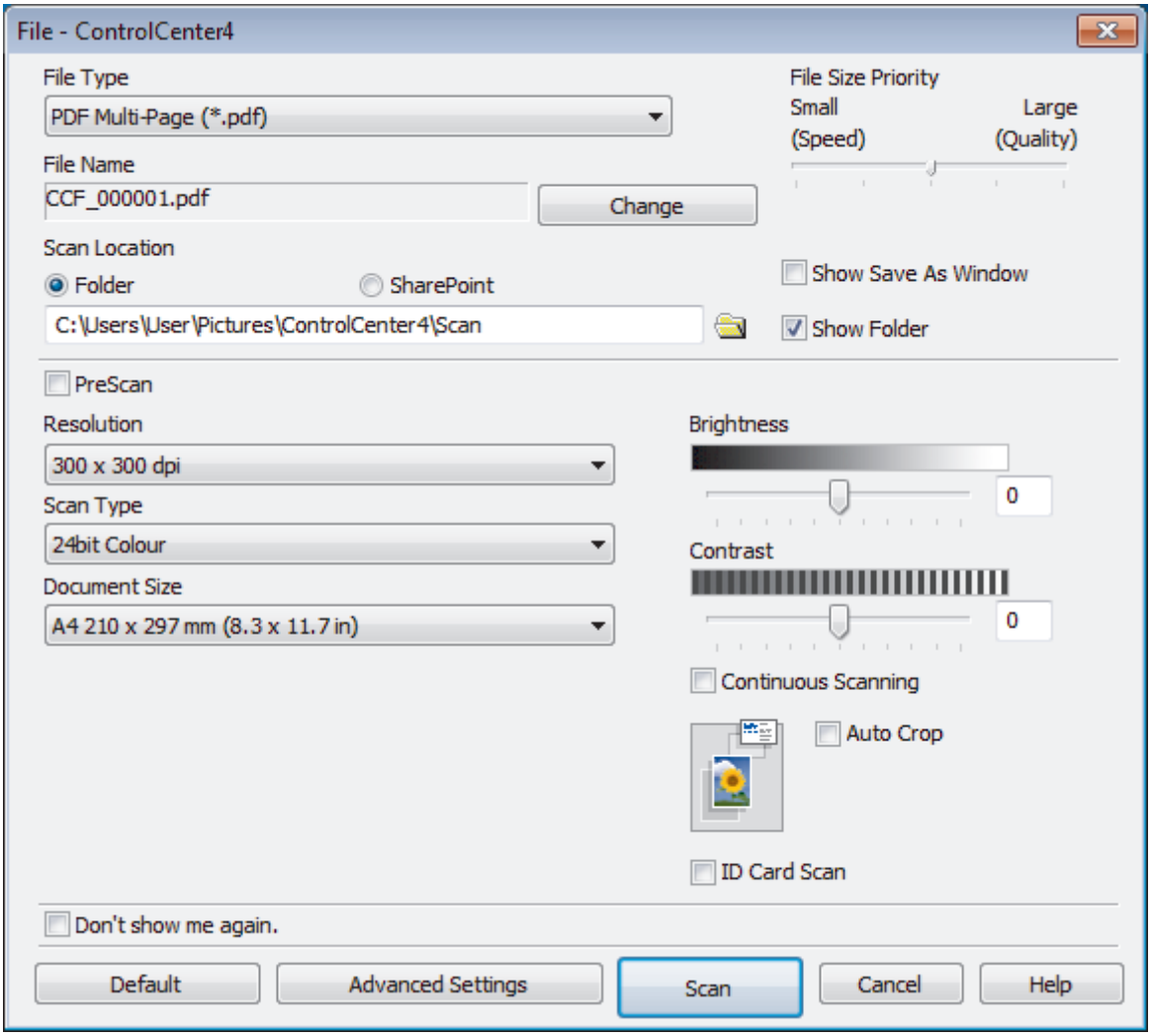

5. Select the **ID Card Scan** check box.

   The instruction dialog box appears.

6. Read the instructions on the screen, and then click **OK**.
7. Change the scan settings, such as file format, file name, scan location, resolution and colour, if needed.
8. Click **Scan**.

   The machine starts scanning one side of the identification card.

9. After the machine has scanned one side, turn over the identification card, and then click **Continue** to scan the other side.
10. Click **Finish**.

Related Information

- Scan Using ControlCenter4 Advanced Mode (Windows)

Scan to Email Attachment Using ControlCenter4 Advanced Mode (Windows)

Send a scanned document as an email attachment.

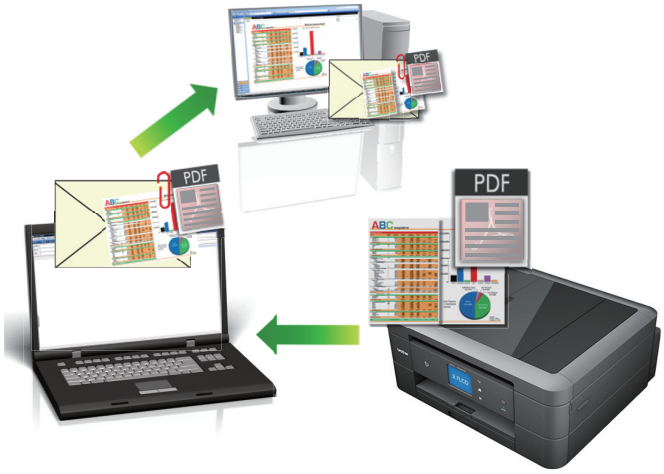

- Select **Advanced Mode** as the mode setting for ControlCenter4.
- The Scan to Email feature does not support Webmail services. Use the Scan to Image or Scan to File feature to scan a document or a picture, and then attach the scanned file to an email message.

The machine scans to your default email client.

1. Load your document.
2. Click the (**ControlCenter4**) icon in the task tray, and then click **Open**.
3. Click the **Scan** tab.

4. Click the **E-mail** button.

   The scan settings dialog box appears.

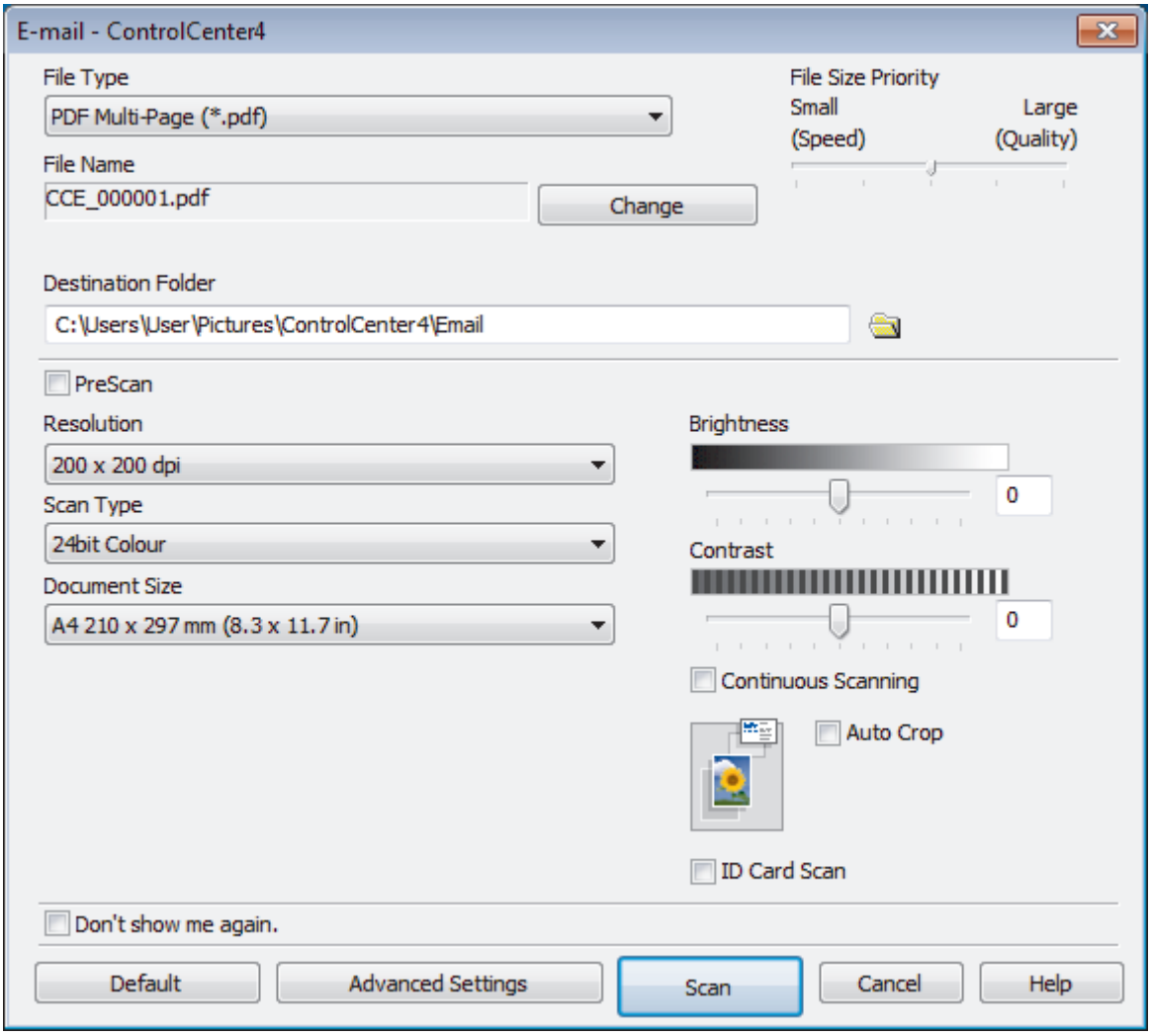

5. Change the scan settings, such as file format, file name, destination folder, resolution and colour, if needed.

- To change the file name, click **Change**.
- To change **Destination Folder**, click the folder icon.
- To preview and configure the scanned image, select the **PreScan** check box.

6. Click **Scan**.

   The machine starts scanning. Your default email application opens and the scanned image is attached to a new, blank email message.

Related Information

- Scan Using ControlCenter4 Advanced Mode (Windows)

Scan to an Editable Text File (OCR) Using ControlCenter4 Advanced Mode (Windows)

Related Models: DCP-J772DW/MFC-J491DW/MFC-J690DW/MFC-J890DW

Your machine can convert characters in a scanned document to text using optical character recognition (OCR) technology. You can edit this text using your preferred text-editing application.

- Select **Advanced Mode** as the mode setting for ControlCenter4.

1. Load your document.
2. Click the (**ControlCenter4**) icon in the task tray, and then click **Open**.
3. Click the **Scan** tab.

4. Click the **OCR** button.

   The scan settings dialog box appears.

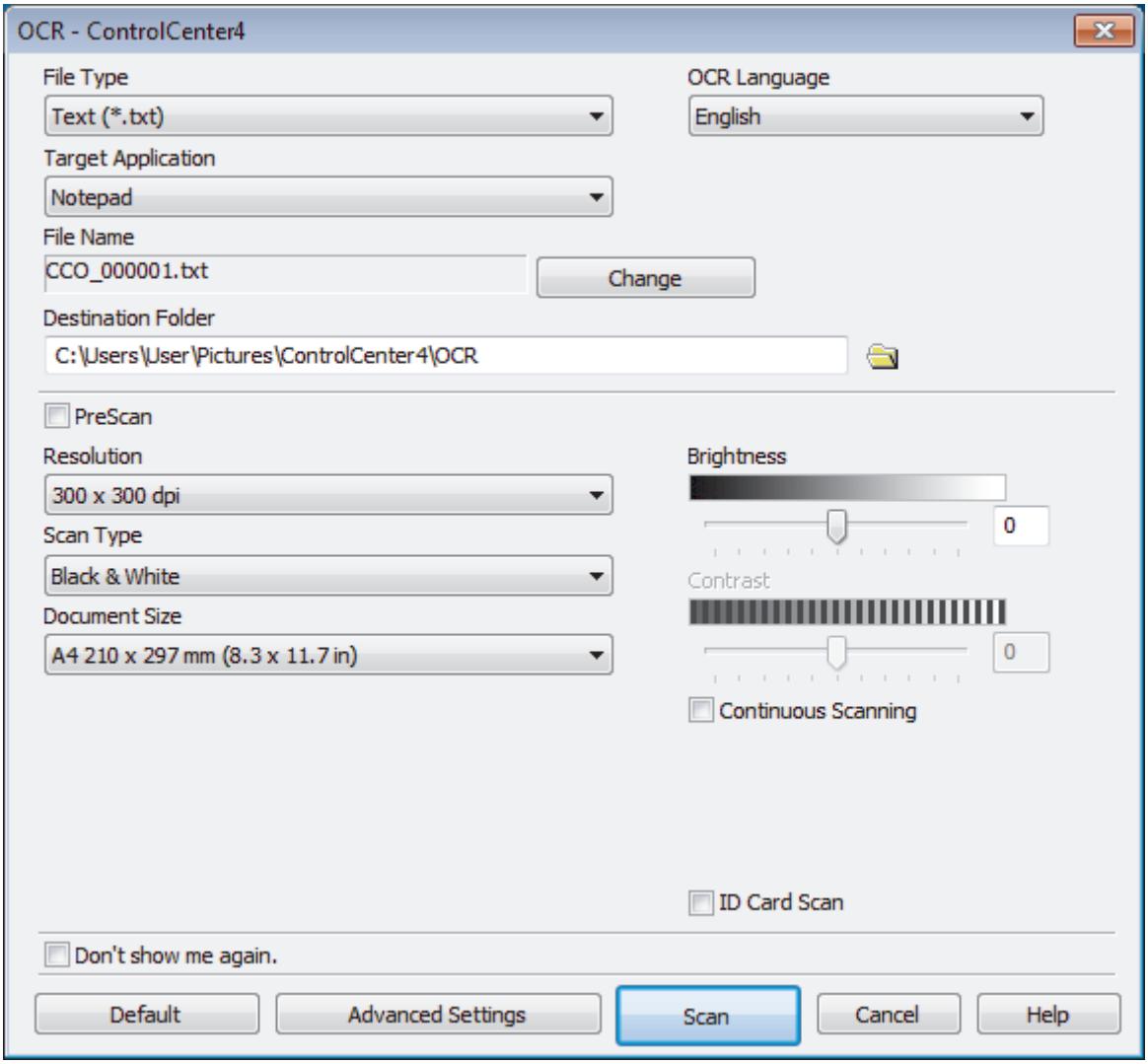

5. Change the scan settings, such as file format, file name, destination folder, resolution and colour, if needed.

- To change the file name, click **Change**.
- To change **Destination Folder**, click the folder icon.
- To preview and configure the scanned image, select the **PreScan** check box.

6. Click **Scan**.

   The machine scans the document, converts it to editable text, and then sends it to your default word processing application.

Related Information

- Scan Using ControlCenter4 Advanced Mode (Windows)

Scan to an Office File Using ControlCenter4 Advanced Mode (Windows)

Your machine can convert scanned data to a Microsoft Word, Microsoft PowerPoint, or Microsoft Excel file.

- Select **Advanced Mode** as the mode setting for ControlCenter4.
- To use this feature, your computer must be connected to the Internet.

1. Load your document.
2. Click the (**ControlCenter4**) icon in the task tray, and then click **Open**.
3. Click the **Scan** tab.

4. Click the **E-mail** or **File** button.

   The scan settings dialog box appears.
5. Click the **File Type** drop-down list, and then select the **Microsoft Office Word (*.docx)**, **Microsoft Office PowerPoint (*.pptx)**, or **Microsoft Office Excel (*.xlsx)** option.
6. Change the scan settings, if needed.
7. Click the **Scan** button.

   If a message dialog box regarding the Internet connection appears, read the information and click **OK**.

Related Information

- Scan Using ControlCenter4 Advanced Mode (Windows)

Scan Settings for ControlCenter4 Advanced Mode (Windows)

Settings	Applicable Features			
	Image	OCR	E-mail	File
File Type	Yes	Yes	Yes	Yes
Target Application	Yes	Yes	-	-
OCR Language (Available only for certain models)	-	Yes	-	-
File Name	Yes	Yes	Yes	Yes
Destination Folder	Yes	Yes	Yes	-
Scan Location	-	-	-	Yes
Show Folder	-	-	-	Yes
Show Save As Window	-	-	-	Yes
File Size Priority	Yes	-	Yes	Yes
PreScan	Yes	Yes	Yes	Yes
Resolution	Yes	Yes	Yes	Yes
Scan Type	Yes	Yes	Yes	Yes
Document Size	Yes	Yes	Yes	Yes
Brightness	Yes	Yes	Yes	Yes
Contrast	Yes	Yes	Yes	Yes
Continuous Scanning	Yes	Yes	Yes	Yes
Auto Crop	Yes	-	Yes	Yes
ID Card Scan	Yes	Yes	Yes	Yes
Advanced Settings	Yes	Yes	Yes	Yes
Default	Yes	Yes	Yes	Yes

File Type

Select the file type you want to use for the scanned data.

For **Image**, **E-mail** and **File**:

- **Windows Bitmap (*.bmp)**
- **JPEG (*.jpg)** (recommended for most users when scanning pictures)
- **TIFF Single-Page (*.tif)**
- **TIFF Multi-Page (*.tif)**
- **Portable Network Graphics (*.png)**
- **PDF Single-Page (*.pdf)** (recommended for scanning and sharing documents)
- **PDF Multi-Page (*.pdf)** (recommended for scanning and sharing documents)
- **High Compression PDF Single-Page (*.pdf)**
- **High Compression PDF Multi-Page (*.pdf)**
- **Secure PDF Single-Page (*.pdf)**
- **Secure PDF Multi-Page (*.pdf)**
- **Searchable PDF Single-Page (*.pdf)**
- **Searchable PDF Multi-Page (*.pdf)**
- **XML Paper Specification (*.xps)** (the XML Paper Specification is available for Windows 7, Windows 8, and Windows 10, or when using applications that support XML Paper Specification files)

For **OCR**:

- **Text (*.txt)**
- **HTML 3.2 (*.htm)**
- **HTML 4.0 (*.htm)**
- **Searchable PDF Single-Page (*.pdf)**
- **Searchable PDF Multi-Page (*.pdf)**
- **WordPad (*.rtf)**
- **RTF Word 2000 (*.rtf)**
- **WordPerfect 9, 10 (*.wpd)**
- **Microsoft Excel 2003, XP (*.xls)**

For **E-mail** and **File**:

- **Microsoft Office Word (*.docx)** (Available only for certain models)
- **Microsoft Office PowerPoint (*.pptx)** (Available only for certain models)
- **Microsoft Office Excel (*.xlsx)** (Available only for certain models)

Target Application

Select the destination application from the drop-down list.

OCR Language

Set the optical character recognition (OCR) language to match the language of the scanned document's text (Available only for certain models).

File Name

Click **Change** to change the file name's prefix.

Destination Folder

Click the folder icon to browse and select the folder where you want to save your scanned documents.

Scan Location

Select the **Folder** or **SharePoint** radio button to specify the destination where you want to save your scanned documents.

Show Folder

Select this option to automatically display the destination folder after scanning.

Show Save As Window

Select this option to specify the scanned image's destination every time you scan.

File Size Priority

Adjust the data compression ratio of the scanned image. Change the file size by moving the **File Size Priority** slider to the right or left.

PreScan

Select **PreScan** to preview your image and crop unwanted portions before scanning.

Resolution

Select a scanning resolution from the **Resolution** drop-down list. Higher resolutions take more memory and transfer time, but produce a finer scanned image.

Scan Type

Select from a range of scan colour depths.

- **Auto**

  Use for any type of document. This mode automatically picks an appropriate colour depth for the document.

- **Black & White**

  Use for text or line art images.

- **Grey (Error Diffusion)**

  Use for photographic images or graphics. (Error Diffusion is a method for creating simulated grey images without using true grey dots. Black dots are put in a specific pattern to give a grey appearance.)
- **True Grey**

  Use for photographic images or graphics. This mode is more accurate because it uses up to 256 shades of grey.
- **24bit Colour**

  Use to create an image with the most accurate colour reproduction. This mode uses up to 16.8 million colours to scan the image, but it requires the most memory and has the longest transfer time.

Document Size

Select the exact size of your document from the **Document Size** drop-down list.

- If you select the **1 to 2 (A4)** option, the scanned image will be divided into two A5-size documents.

Brightness

Set the **Brightness** level by dragging the slider to the right or left to lighten or darken the image. If the scanned image is too light, set a lower brightness level and scan the document again. If the image is too dark, set a higher brightness level and scan the document again. You can also type a value into the field to set the **Brightness** level.

Contrast

Increase or decrease the **Contrast** level by moving the slider to the right or left. An increase emphasises dark and light areas of the image, while a decrease reveals more details in grey areas. You can also type a value into the field to set the **Contrast** level.

Continuous Scanning

Select this option to scan multiple pages. After a page is scanned, select either continue scanning or finish.

Auto Crop

Scan multiple documents placed on the scanner glass. The machine will scan each document and create separate files or a single multi-page file.

ID Card Scan

Select this check box to scan both sides of an identification card onto one page.

Advanced Settings

Configure advanced settings by clicking the **Advanced Settings** button in the scan settings dialog box.

- **Remove Bleed-through / Pattern**
  - **Remove Background Colour**

    Remove the base colour of documents to make the scanned data more legible.
- **Rotate Image**

  Rotate the scanned image.
- **Skip Blank Page**

  Remove the document's blank pages from the scanning results. (Available only for certain models)
- **Display Scanning Results**

  Show on your computer screen the number of total pages saved, and blank pages skipped. (Available only for certain models)

Default

Select this option to restore all settings to their factory setting values.

Related Information

- Scan Using ControlCenter4 Advanced Mode (Windows)

Scan Using Nuance™ PaperPort™ 14SE or Other Windows Applications

You can use the Nuance™ PaperPort™ 14SE application for scanning.

- To download the Nuance™ PaperPort™ 14SE application, click (**Brother Utilities**), select **Do More** in the left navigation bar, and then click **PaperPort**.
- Nuance™ PaperPort™ 14SE supports Windows 7, Windows 8, Windows 8.1, Windows 10 Home, Windows 10 Pro, Windows 10 Education and Windows 10 Enterprise.
- For detailed instructions on using each application, click the application's **Help** menu, and then click **Getting Started Guide** in the **Help** ribbon.

The instructions for scanning in these steps are for PaperPort™ 14SE. For other Windows applications, the steps will be similar. PaperPort™ 14SE supports both TWAIN and WIA drivers; the TWAIN driver (recommended) is used in these steps.

- Depending on the model of your machine, Nuance™ PaperPort™ 14SE may not be included. If it is not included, you can use other software applications that support scanning.

1. Load your document.
2. Start PaperPort™ 14SE.

   Do one of the following:

   - Windows 7

     Using your computer, click **(Start)** > **All Programs** > **Nuance PaperPort 14** > **PaperPort**.

   - Windows 8

     Click (**PaperPort**).

   - Windows 10

     Click > **Nuance PaperPort 14** > **PaperPort**.

3. Click the **Desktop** menu, and then click **Scan Settings** in the **Desktop** ribbon.

   The **Scan or Get Photo** panel appears on the left side of the screen.
4. Click **Select**.
5. From the available Scanners list, select **TWAIN: TW-Brother MFC-XXXX** or **TWAIN: TW-Brother MFC-XXXX LAN** (where MFC-XXXX is the model name of your machine). To use the WIA driver, select the Brother driver that has "WIA" as the prefix.
6. Select the **Display scanner dialog box** check box in the **Scan or Get Photo** panel.
7. Click **Scan**.

   The Scanner Setup dialog box appears.

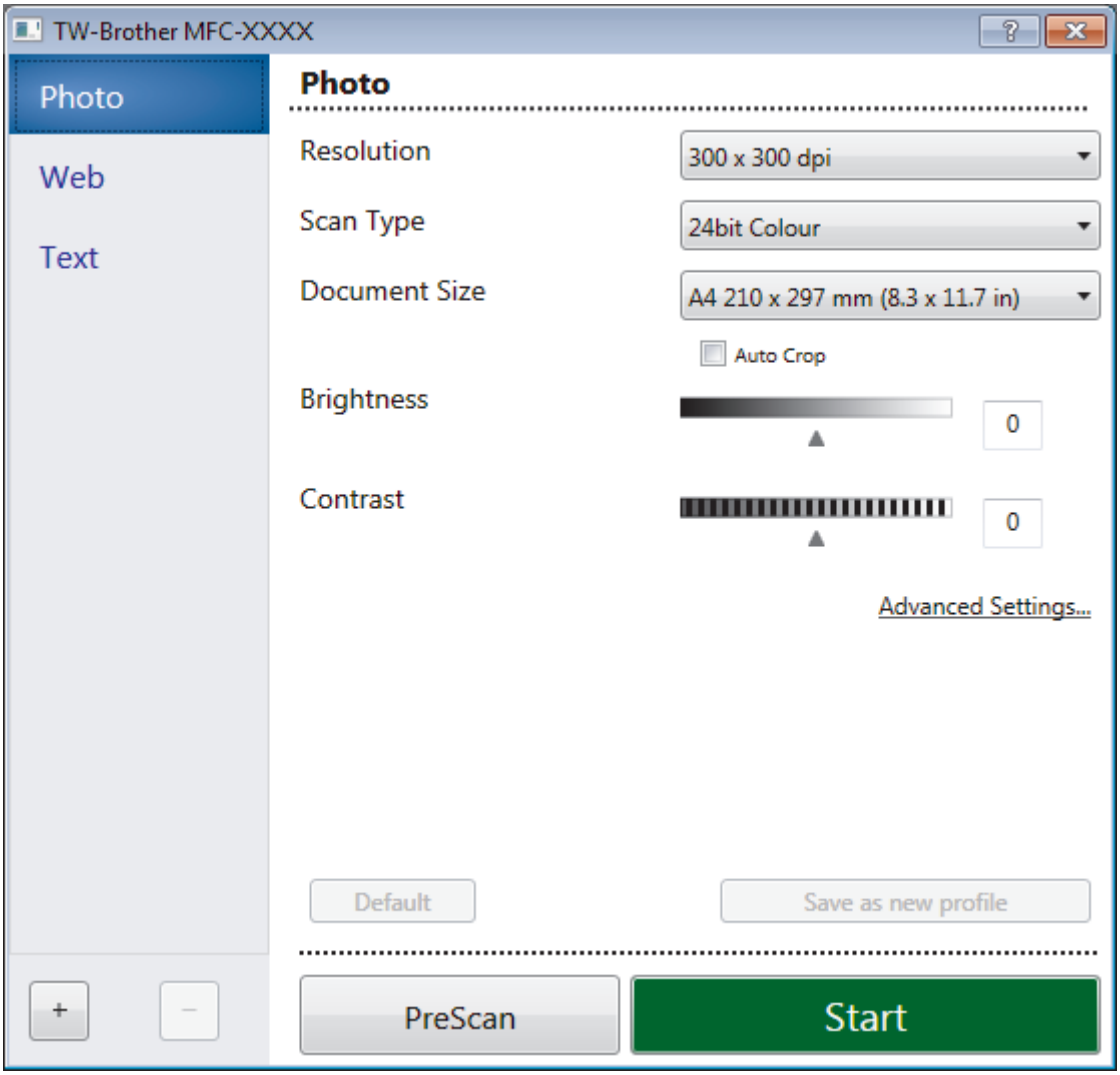

8. Adjust the settings in the Scanner Setup dialog box, if needed.
9. Click the **Document Size** drop-down list, and then select your document size.
10. Click **PreScan** if you want to preview your image and crop unwanted portions before scanning.
11. Click **Start**.

    The machine starts scanning.

Related Information

- Scan from Your Computer (Windows)
- TWAIN Driver Settings (Windows)

TWAIN Driver Settings (Windows)

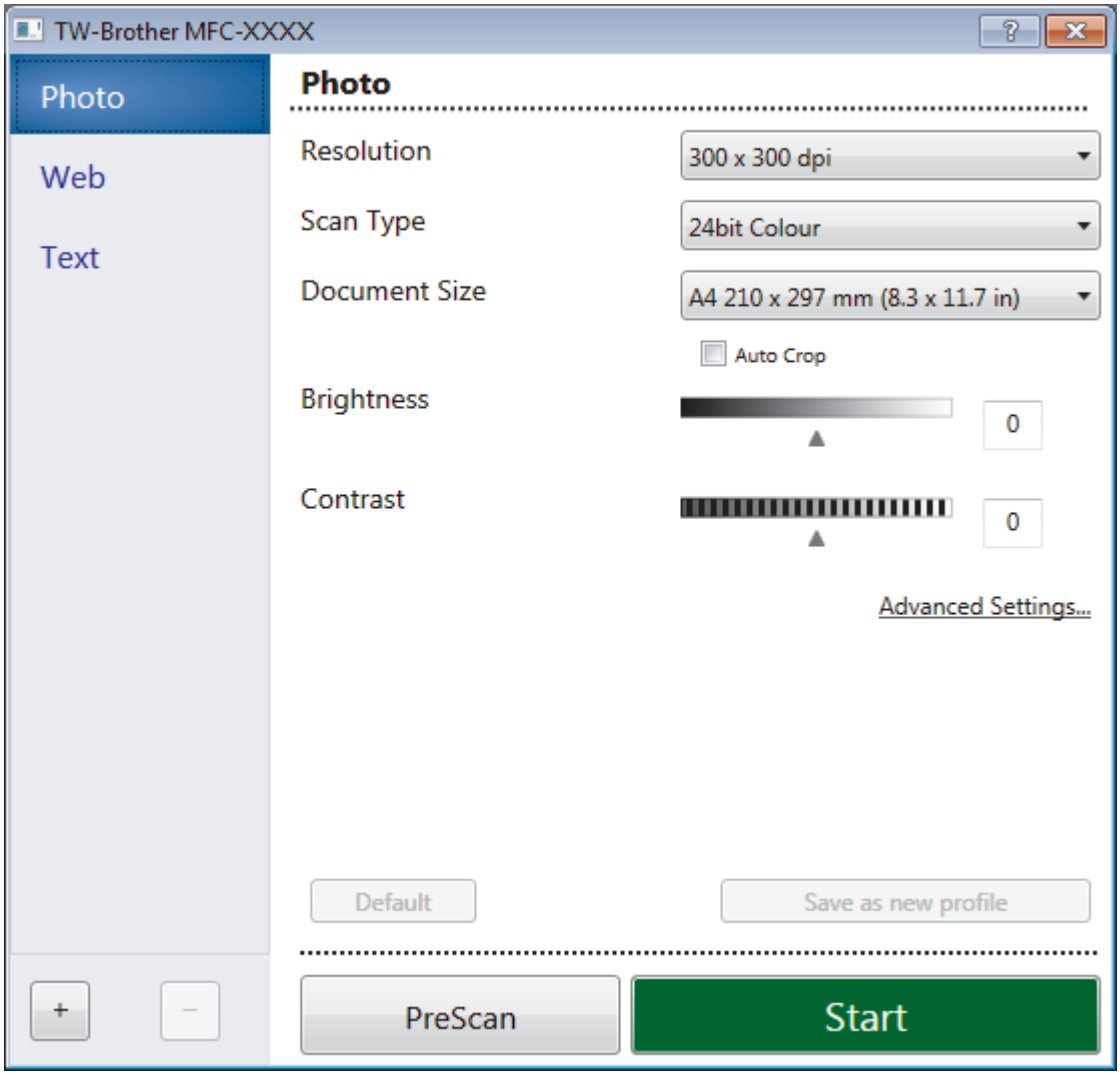

Note that the item names and assignable values will vary depending on the machine.

1. **Scan**

   Select the **Photo**, **Web**, or **Text** option depending on the type of document you want to scan.

Scan (Image Type)		Resolution	Scan Type
Photo	Use for scanning photo images.	300 x 300 dpi	**24bit Colour**
Web	Use for attaching the scanned image to web pages.	100 x 100 dpi	**24bit Colour**
Text	Use for scanning text documents.	200 x 200 dpi	**Black & White**

2. **Resolution**

   Select a scanning resolution from the **Resolution** drop-down list. Higher resolutions take more memory and transfer time, but produce a finer scanned image.

3. **Scan Type**

   Select from a range of scan colour depths.

   - **Black & White**

     Use for text or line art images.

- **Grey (Error Diffusion)**

  Use for photographic images or graphics. (Error Diffusion is a method for creating simulated grey images without using true grey dots. Black dots are put in a specific pattern to give a grey appearance.)

- **True Grey**

  Use for photographic images or graphics. This mode is more accurate because it uses up to 256 shades of grey.

- **24bit Colour**

  Use to create an image with the most accurate colour reproduction. This mode uses up to 16.8 million colours to scan the image, but it requires the most memory and has the longest transfer time.

4. **Document Size**

   Select the exact size of your document from a selection of preset scan sizes.

   If you select **Custom**, the **Custom Document Size** dialog box appears and you can specify the document size.

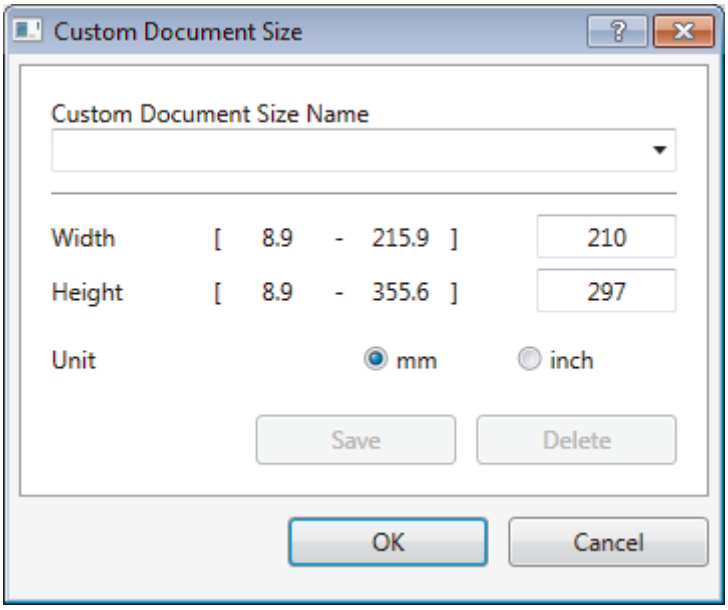

5. **Brightness**

   Set the **Brightness** level by dragging the slider to the right or left to lighten or darken the image. If the scanned image is too light, set a lower brightness level and scan the document again. If the image is too dark, set a higher brightness level and scan the document again. You can also type a value in the field to set the brightness level.

6. **Contrast**

   Increase or decrease the **Contrast** level by moving the slider to the right or left. An increase emphasises dark and light areas of the image, while a decrease reveals more details in grey areas. You can also type a value in the field to set the contrast level.

7. **Auto Crop**

   Scan multiple documents placed on the scanner glass. The machine will scan each document and create separate files or a single multi-page file.

8. **Advanced Settings**

   Configure advanced settings by clicking the **Advanced Settings** button in the Scanner Setup dialog box.

   - **Paper**
     - **Rotate Image**

       Rotate the scanned image.
   - **Enhancement**
     - **Background Processing**
       - **Remove Bleed-through / Pattern**

         Prevent bleed-through.

- **Remove Background Colour**

  Remove the base colour of documents to make the scanned data more legible.

- **Colour Drop**

  Select a colour to remove from the scanned image.

- **Boldface Formatting**

  Emphasise the characters of the original by making them bold.

- **Blurred Character Correction**

  Correct the broken or incomplete characters of the original to make them easier to read.

- **Edge Emphasis**

  Make the characters of the original sharper.

- **Reduce Noise**

  Improve and enhance the quality of your scanned images with this selection. The **Reduce Noise** option is available when selecting the **24bit Colour** option and the **300 x 300 dpi**, **400 x 400 dpi**, or **600 x 600 dpi** scan resolution.

- **Paper Handling**
  - **Edge Fill**

    Fill in the edges on four sides of the scanned image using the selected colour and range.

  - **Continuous Scan**

    Select this option to scan multiple pages. After a page is scanned, select either continue scanning or finish.

Related Information

- Scan Using Nuance™ PaperPort™ 14SE or Other Windows Applications

Scan Using Windows Fax and Scan

Windows Fax and Scan application is another option that you can use for scanning.

- Windows Fax and Scan uses the WIA scanner driver.
- If you want to crop a portion of a page after pre-scanning the document, you must scan using the scanner glass (also called the flatbed).

1. Load your document.
2. Launch Windows Fax and Scan.
3. Click **File** > **New** > **Scan**.
4. Select the scanner you want to use.
5. Click **Import** or **OK**.

   The **New Scan** dialog box appears.

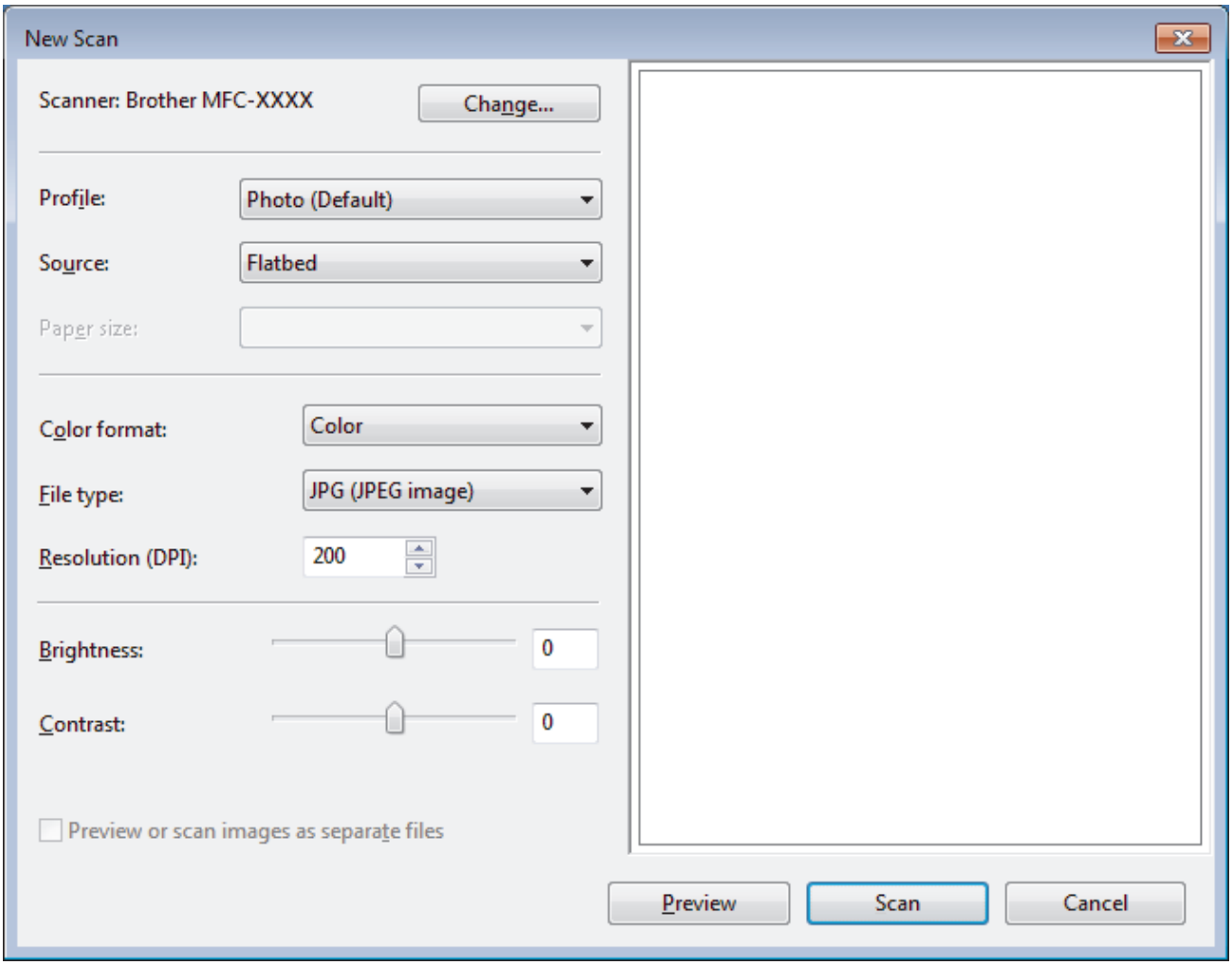

6. Adjust the settings in the Scanner Setup dialog box, if needed.

   The scanner resolution can be set to a maximum of 1200 dpi. If you want to scan at higher resolutions, use the **Scanner Utility** software of **Brother Utilities**.
7. Click **Scan**.

   The machine starts scanning the document.

Related Information

- Scan from Your Computer (Windows)
- WIA Driver Settings (Windows)

WIA Driver Settings (Windows)

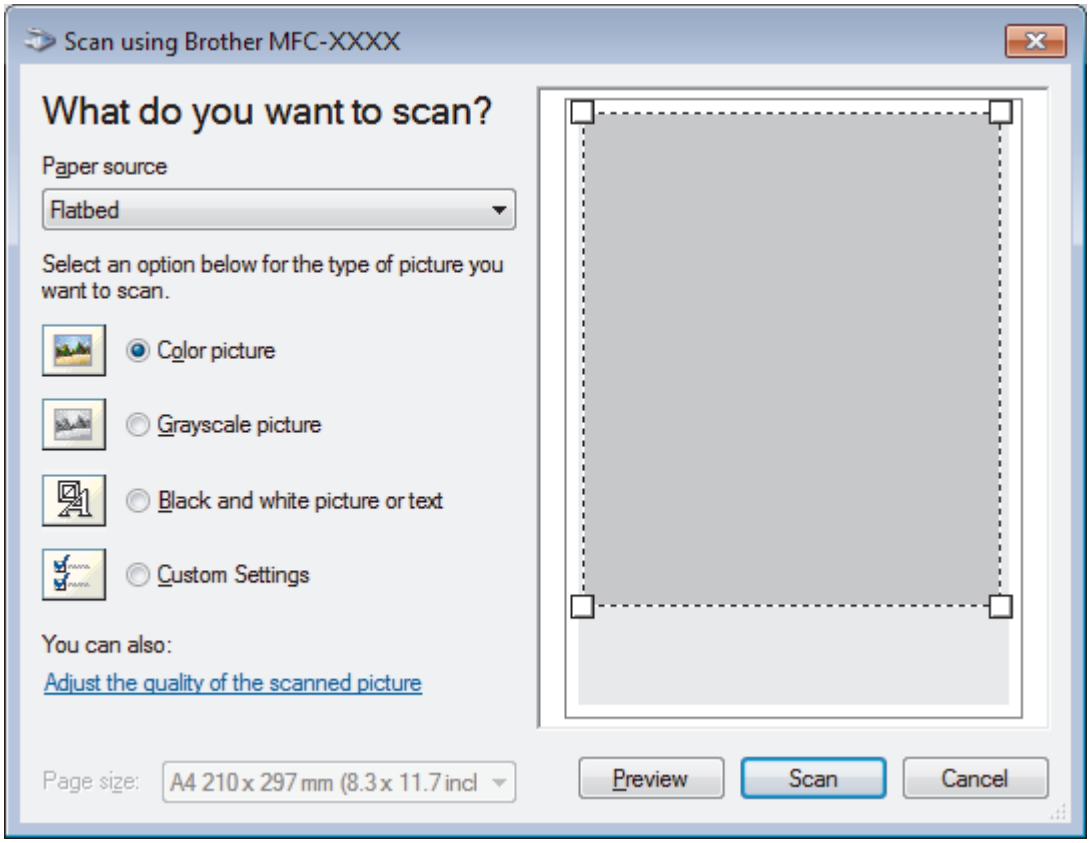

Paper source

Select the **Document Feeder** or **Flatbed** option from the drop-down list.

Picture Type (Image Type)

Select **Color picture**, **Grayscale picture**, **Black and white picture or text** , or **Custom Settings** for the type of document you want to scan.

To change advanced settings, click the **Adjust the quality of the scanned picture** link.

Page size

The **Page size** option is available if you select the **Document Feeder** as the **Paper source** option.

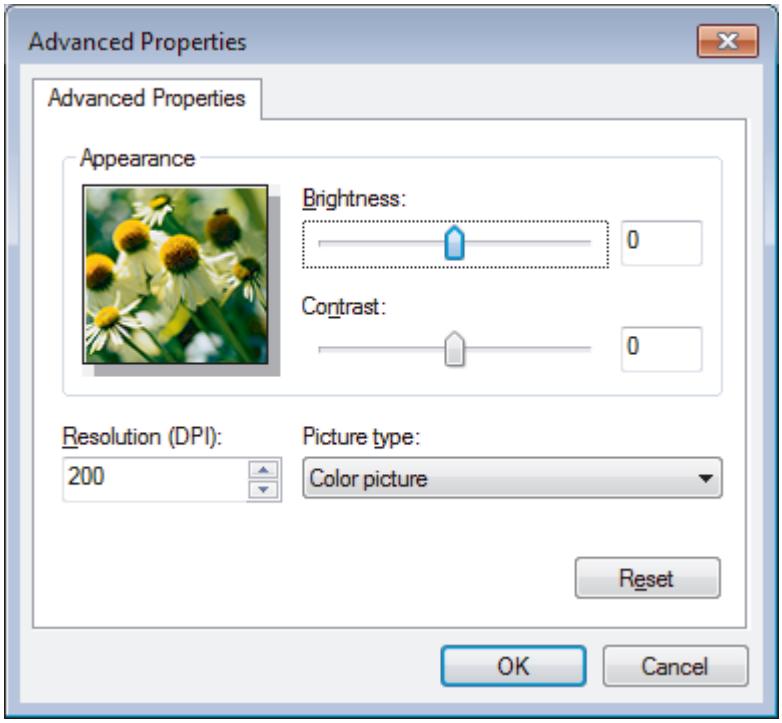

Brightness

Set the **Brightness** level by dragging the slider to the right or left to lighten or darken the image. If the scanned image is too light, set a lower brightness level and scan the document again. If the image is too dark, set a higher brightness level and scan the document again.

Contrast

Increase or decrease the **Contrast** level by moving the slider to the right or left. An increase emphasises dark and light areas of the image, while a decrease reveals more details in grey areas. You can also type a value in the field to set the contrast level.

Resolution (DPI)

Select a scanning resolution from the **Resolution (DPI)** list. Higher resolutions take more memory and transfer time, but produce a finer scanned image.

Related Information

- Scan Using Windows Fax and Scan

Install BookScan Enhancer and Whiteboard Enhancer (Windows)

BookScan Enhancer and Whiteboard Enhancer are image processing applications. BookScan Enhancer can automatically correct images scanned from books. Whiteboard Enhancer can clean up and enhance text and images in photos taken of a whiteboard.

These applications are not available for Windows Server series.

- The machine must be turned on and connected to the computer.
- The computer must be connected to the Internet.
- You must be logged on with Administrator access privileges.

1. Click (**Brother Utilities**).
2. Select your machine from the drop-down list.
3. Select **Do More** in the left navigation bar.
4. Click **BookScan&WhiteBoard Suite** and follow the on-screen instructions to install.

Related Information

- Scan from Your Computer (Windows)

Scan from Your Computer (Mac)

There are several ways you can use your Mac to scan photos and documents on your Brother machine. Use the software applications provided by Brother or your favourite scanning application.

- Scan Using Brother iPrint&Scan (Mac)
- Scan Using TWAIN-Compliant Applications (Mac)
- Scan Using AirPrint (macOS)

Scan Using Brother iPrint&Scan (Mac)

1. In the **Finder** menu bar, click **Go** > **Applications**, and then double-click the iPrint&Scan icon.
   The Brother iPrint&Scan screen appears.
2. If your Brother machine is not selected, click the **Select your Machine** button, and then follow the on-screen instructions to select your Brother machine.
3. Click the **Scan** icon, and then follow the on-screen instructions to scan your documents.

Related Information

- Scan from Your Computer (Mac)
- Brother iPrint&Scan for Windows and Mac
- Change Scan Button Settings from Brother iPrint&Scan (Mac)

Scan Using TWAIN-Compliant Applications (Mac)

You can also scan using TWAIN-compliant applications. For more information about the scanning procedure, see the manual for your application.

To use Brother TWAIN Driver, go to your model's **Downloads** page on the Brother Solutions Center at support.brother.com and download **Scanner Driver (TWAIN)**.

1. Start your graphics application, and then select the scan operation.

   The scanner setup dialog box appears.

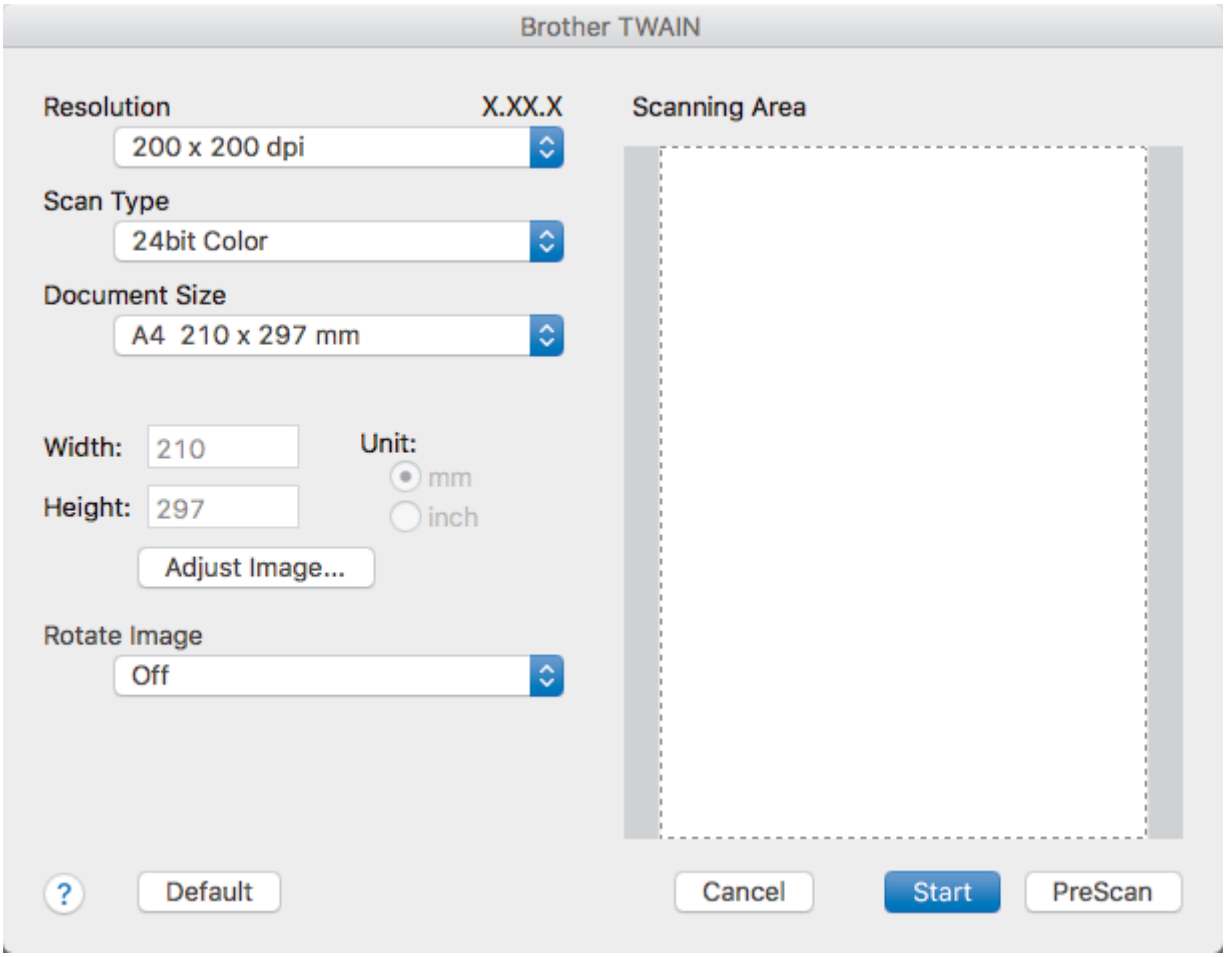

2. Change the scan settings, such as **Resolution**, **Scan Type**, or **Adjust Image**, if needed.
3. Click the **Document Size** pop-up menu, and then select your document size.
4. Click the **PreScan** option to preview your image and crop unwanted portions before scanning.

   - After you select a document size, adjust the scanning area by holding down the mouse button and dragging your mouse pointer over the portion you want to scan.

5. Click **Start**.

   The machine starts scanning.

Related Information

- Scan from Your Computer (Mac)
- TWAIN Driver Settings (Mac)

TWAIN Driver Settings (Mac)

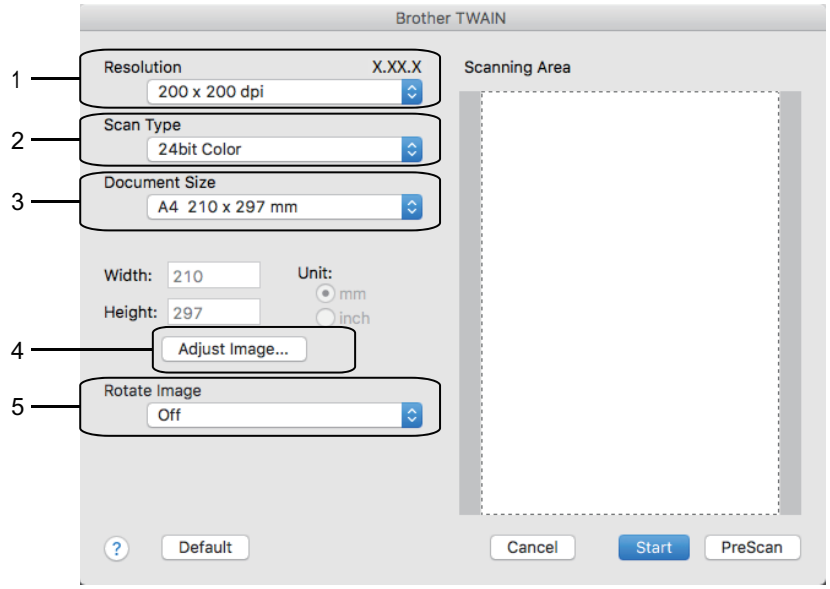

- Item names and assignable values will vary depending on the machine.
- The **Contrast** setting is available only when selecting **Gray (Error Diffusion)**, **True Gray**, or **24bit Color** from the **Scan Type** options.

1. **Resolution**

   Select a scanning resolution from the **Resolution** pop-up menu. Higher resolutions take more memory and transfer time, but produce a finer scanned image.

2. **Scan Type**

   Select from a range of scan colour depths.

   - **Black & White**

     Use for text or line art images.

   - **Gray (Error Diffusion)**

     Use for photographic images or graphics. (Error Diffusion is a method for creating simulated grey images without using true grey dots. Black dots are put in a specific pattern to give a grey appearance.)

   - **True Gray**

     Use for photographic images or graphics. This mode is more accurate because it uses up to 256 shades of grey.

   - **24bit Color**

     Use to create an image with the most accurate colour reproduction. This mode uses up to 16.8 million colours to scan the image, but it requires the most memory and has the longest transfer time.

3. **Document Size**

   Select the exact size of your document from a selection of preset scan sizes.

   - If you select **Custom**, you can specify the document size.

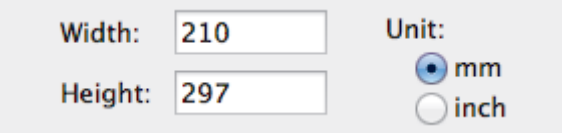

4. **Adjust Image**

   Click the **Adjust Image** button to adjust other image qualities.

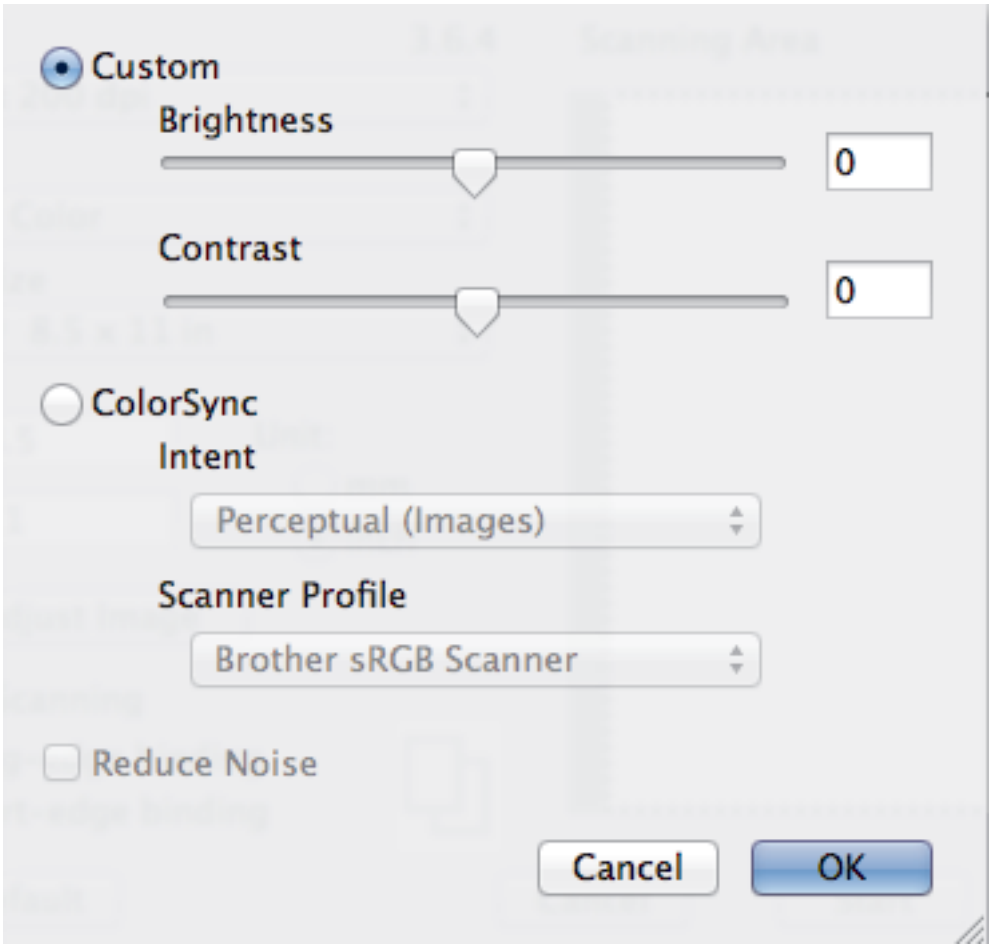

   Brightness

   Set the **Brightness** level by dragging the slider to the right or left to lighten or darken the image. If the scanned image is too light, set a lower brightness level and scan the document again. If the image is too dark, set a higher brightness level and scan the document again. You can also type a value in the box to set the brightness.

   Contrast

   Increase or decrease the **Contrast** level by moving the slider to the right or left. An increase emphasises dark and light areas of the image, while a decrease reveals more details in grey areas. You can also type a value in the box to set the contrast.

   Reduce Noise

   Improve and enhance the quality of your scanned images with this selection. The **Reduce Noise** option is available when selecting the **24bit Color** option and the **300 x 300 dpi**, **400 x 400 dpi**, or **600 x 600 dpi** scan resolutions.

5. **Rotate Image**

   Rotate the scanned image.

Related Information

- Scan Using TWAIN-Compliant Applications (Mac)

Copy

- Copy a Document
- Enlarge or Reduce Copied Images
- Sort Copies
- Make Page Layout Copies (N in 1 or Poster)
- Copy on Both Sides of the Paper (2-sided Copy)
- Copy an ID Card
- Copy in Ink Save Mode
- Copy Options

Copy a Document

>> DCP-J572DW/MFC-J491DW
>> DCP-J772DW/MFC-J690DW/MFC-J890DW

DCP-J572DW/MFC-J491DW

1. Make sure you have loaded the correct size paper in the paper tray.
2. Load your document.
3. (MFC-J491DW) Press (**COPY**).

   The LCD displays:

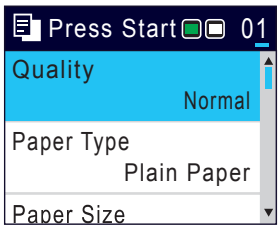

4. Enter the number of copies in one of the following ways:
   - Press **-** or **+** on the control panel.
   - Enter the number of copies using the dial pad.
5. Change the copy settings, if needed.

   Press ▲ or ▼ to scroll through the copy settings. When the setting you want is highlighted, press **OK**.

- When you load paper other than A4 size plain paper, you must change the `[Paper Size]` and `[Paper Type]` settings.

6. When finished, press **Mono Start** or **Colour Start**.

To stop copying, press **Stop/Exit**.

DCP-J772DW/MFC-J690DW/MFC-J890DW

1. Make sure you have loaded the correct size paper in the paper tray.
2. Load your document.
3. Press `[Copy]`.

   The touchscreen displays:

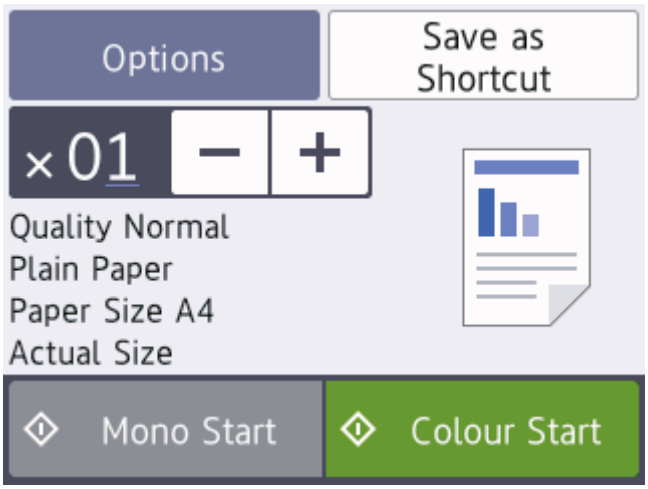

4. Change the copy settings, if needed.

When you load paper other than A4 size plain paper, you must change the [Paper Size] and [Paper Type] settings by pressing [Options].

Option	Description
×01 (No. of Copies)	Enter the number of copies in one of the following ways: • Press − or + on the touchscreen. • Press ×01 to display the keyboard on the touchscreen, and then enter the number of copies using the touchscreen keyboard. Press OK.
Options	Press Options to change the copy settings for the next copy only. When you have finished changing settings, press OK.
Current setting indications	Press the area indicated on the screen in the previous step to change these settings for the next copy only. • Quality • Paper Type • Paper Size • Enlarge/Reduce When you have finished changing settings, press OK.

After you have finished selecting new options, you can save them by pressing the [Save as Shortcut] button.

5. Press [Mono Start] or [Colour Start].

To stop copying, press .

Related Information

- Copy
- Load Documents in the Automatic Document Feeder (ADF)
- Load Documents on the Scanner Glass
- Copy Options

Enlarge or Reduce Copied Images

Select an enlargement or reduction ratio to resize your copied data.

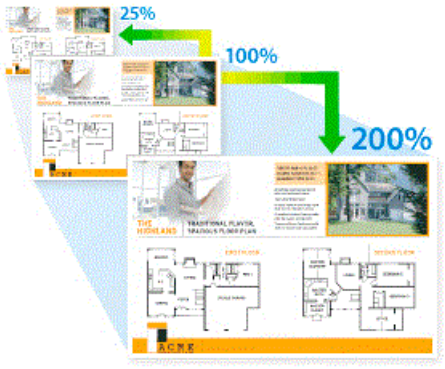

>> DCP-J572DW/MFC-J491DW
>> DCP-J772DW/MFC-J690DW/MFC-J890DW

DCP-J572DW/MFC-J491DW

1. Load your document.
2. (MFC-J491DW) Press (**COPY**).
3. Enter the number of copies in one of the following ways:
   - Press **-** or **+** on the control panel.
   - Enter the number of copies using the dial pad.
4. Press ▲ or ▼ to select `[Enlarge/Reduce]`. Press **OK**.
5. Press ▲ or ▼ to select the available options. Press **OK**.
6. Do one of the following:
   - If you selected the `[Enlarge]` or `[Reduce]` option, press ▲ or ▼ to select the enlargement or reduction ratio you want to use. Press **OK**.
   - If you selected the `[Custom(25-400%)]` option, enter an enlargement or reduction ratio from `[25%]` to `[400%]`. Press **OK**.
   - If you selected `[100%]` or the `[Fit to Page]` option, go to the next step.
7. When finished, press **Mono Start** or **Colour Start**.

If you selected the `[Fit to Page]` option, your machine adjusts the copy size to fit the paper size set in the machine.

- The `[Fit to Page]` option does not work correctly when the document on the scanner glass is skewed more than three degrees. Using the document guidelines on the left and top, place your document in the upper-left corner, with the document face down on the scanner glass.
- The `[Fit to Page]` option is not available when using the ADF.
- The `[Fit to Page]` option is not available for Legal size documents.

DCP-J772DW/MFC-J690DW/MFC-J890DW

1. Load your document.
2. Press `[Copy]`.
3. Enter the number of copies in one of the following ways:
   - Press `[-]` or `[+]` on the touchscreen.

- Press ×01 to display the keyboard on the touchscreen, and then enter the number of copies using the touchscreen keyboard. Press [OK].

4. Press [Options] > [Enlarge/Reduce].
5. Press ▲ or ▼ to display the available options, and then press the option you want to change.
6. Do one of the following:
   - If you selected the [Enlarge] or [Reduce] option, press the enlargement or reduction ratio you want to use.
   - If you selected the [Custom(25-400%)] option, press ⌫ (backspace) to erase the displayed percentage, or press ◄ to move the cursor, and then enter an enlargement or reduction ratio from [25%] to [400%].

     Press [OK].
   - If you selected [100%] or the [Fit to Page] option, go to the next step.
7. Read and confirm the displayed list of options you have selected, and then press [OK].
8. When you have finished changing settings, press [Mono Start] or [Colour Start].

If you selected the [Fit to Page] option, your machine adjusts the copy size to fit the paper size set in the machine.

- The [Fit to Page] option does not work correctly when the document on the scanner glass is skewed more than three degrees. Using the document guidelines on the left and top, place your document in the upper-left corner, with the document face down on the scanner glass.
- The [Fit to Page] option is not available when using the ADF. (ADF models only)
- The [Fit to Page] option is not available for Legal size documents.

Related Information

- Copy

Sort Copies

Sort multiple copies. Pages will be stacked in the order they are fed, that is: 1, 2, 3, and so on.

>> DCP-J572DW/MFC-J491DW
>> DCP-J772DW/MFC-J690DW/MFC-J890DW

DCP-J572DW/MFC-J491DW

1. Load your document.
2. (MFC-J491DW) Press (**COPY**).
3. Enter the number of copies in one of the following ways:
   - Press **-** or **+** on the control panel.
   - Enter the number of copies using the dial pad.
4. Press ▲ or ▼ to select the following:
   a. Select `[Stack/Sort]`. Press **OK**.
   b. Select `[Sort]`. Press **OK**.
5. Press **Mono Start** or **Colour Start**. If you placed the document in the ADF (ADF models only), the machine scans the document and starts printing.
6. If you are using the scanner glass, repeat the following steps for each page of the document:
   - Place the next page on the scanner glass, and then press ▶ to scan the page.
   - After scanning all the pages, press ◀ to start printing.

DCP-J772DW/MFC-J690DW/MFC-J890DW

1. Load your document.
2. Press `[Copy]`.
3. Enter the number of copies in one of the following ways:
   - Press `[-]` or `[+]` on the touchscreen.
   - Press to display the keyboard on the touchscreen, and then enter the number of copies using the touchscreen keyboard. Press `[OK]`.
4. Press `[Options]` > `[Stack/Sort]` > `[Sort]`.
5. Read and confirm the displayed list of settings you have selected, and then press `[OK]`.
6. When you have finished changing settings, press `[Mono Start]` or `[Colour Start]`. If you placed the document in the ADF (ADF models only), the machine scans the document and starts printing.
7. If you are using the scanner glass, repeat the following steps for each page of the document:
   - Place the next page on the scanner glass, and then press `[Continue]` to scan the page.
   - After scanning all the pages, press `[Finish]`.

Related Information

- Copy

Make Page Layout Copies (N in 1 or Poster)

The N in 1 copy feature saves paper by copying two or four pages of your document onto one page of the copy. The poster feature divides your document into sections, then enlarges the sections so you can assemble them into a poster. To print a poster, use the scanner glass.

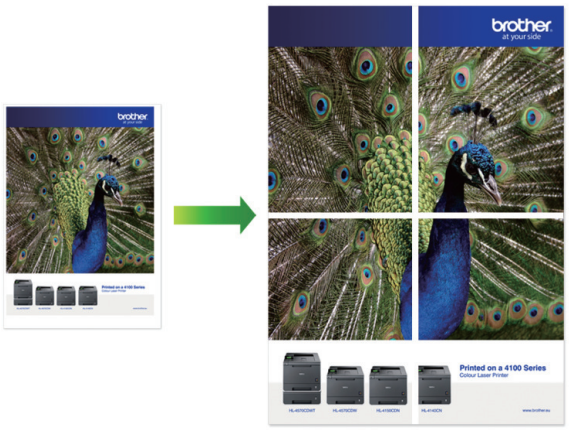

- Make sure the paper size is set to A4, or Letter.
- You can make only one Poster copy at a time.

>> DCP-J572DW/MFC-J491DW
>> DCP-J772DW/MFC-J690DW/MFC-J890DW

DCP-J572DW/MFC-J491DW

1. Load your document.
2. (MFC-J491DW) Press (**COPY**).
3. Enter the number of copies in one of the following ways:
   - Press **-** or **+** on the control panel.
   - Enter the number of copies using the dial pad.
4. Press ▲ or ▼ to select `[Page Layout]`. Press **OK**.
5. Press ▲ or ▼ to display the options, and then press **OK** to select the option you want.

Option	Description
`Off(1in1)`	-
`2in1(Portrait)`	

Option	Description
2in1(Landscape)	
2in1(ID) (Using the scanner glass)	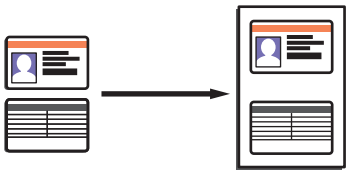
4in1(Portrait)	
4in1(Landscape)	
Poster(2x1) (Using the scanner glass)	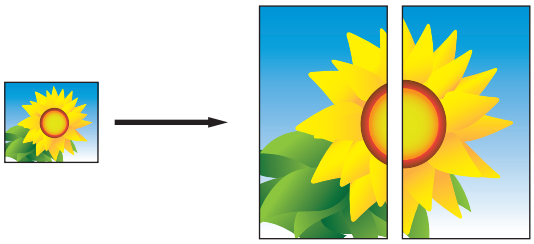
Poster(2x2) (Using the scanner glass)	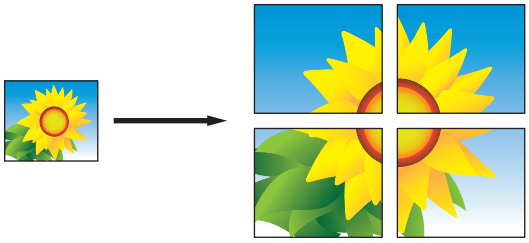
Poster(3x3) (Using the scanner glass)	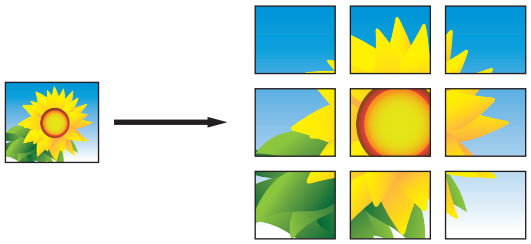

6. Press **Mono Start** or **Colour Start**. If you placed the document in the ADF or are making a poster, the machine scans the pages and starts printing.
7. If you are using the scanner glass, repeat the following steps for each page of the document:
   - Place the next page on the scanner glass, and then press ▶ to scan the page.
   - After scanning all the pages, press ◀ to start printing.

DCP-J772DW/MFC-J690DW/MFC-J890DW

1. Load your document.
2. Press [Copy].
3. Enter the number of copies in one of the following ways:

- Press [-] or [+] on the touchscreen.
- Press ×01 to display the keyboard on the touchscreen, and then enter the number of copies using the touchscreen keyboard. Press [OK].

4. Press [Options] > [Page Layout].
5. Press ▲ or ▼ to display the options, and then press the option you want.

Option	Description
Off(1in1)	-
2in1(Portrait)	
2in1(Landscape)	
2in1(ID) (Using the scanner glass)	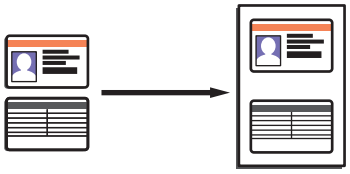
4in1(Portrait)	
4in1(Landscape)	
Poster(2x1) (Using the scanner glass)	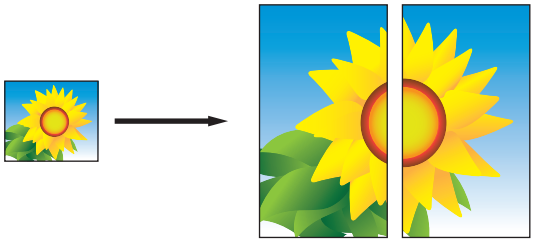
Poster(2x2) (Using the scanner glass)	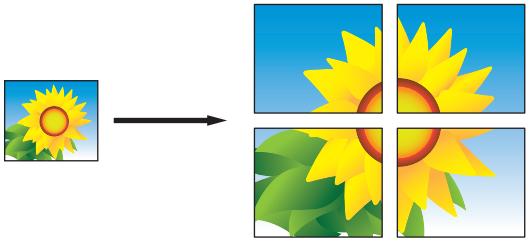
Poster(3x3) (Using the scanner glass)	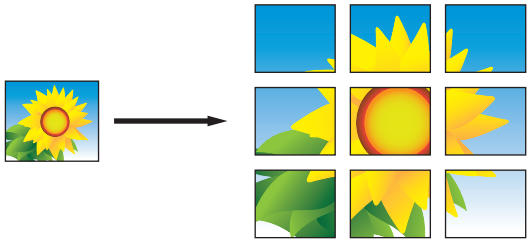

6. Read and confirm the displayed list of settings you have selected, and then press [OK].
7. When you have finished changing settings, press [Mono Start] or [Colour Start]. If you placed the document in the ADF (ADF models only) or are making a poster, the machine scans the pages and starts printing.
8. If you are using the scanner glass, repeat the following steps for each page of the document:
   - Place the next page on the scanner glass, and then press [Continue] to scan the page.
   - After scanning all the pages, press [Finish].

Related Information

- Copy

Copy on Both Sides of the Paper (2-sided Copy)

Reduce the amount of paper you use by copying onto both sides of the paper.

- You must choose a 2-sided copy layout from the following options before you can start 2-sided copying.
- The layout of your original document determines which 2-sided copy layout you should choose.
- We recommend loading single-sided documents in the ADF for 2-sided copying. (ADF models only)
- (MFC-J491DW/MFC-J690DW/MFC-J890DW)
  When you manually make 2 sided copies from a 2-sided document, use the scanner glass.
- You can use only A4, A5, or Letter size plain paper.

Portrait

1–sided to 2–sided (Long Edge Flip)

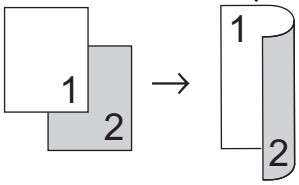

1–sided to 2–sided (Short Edge Flip)

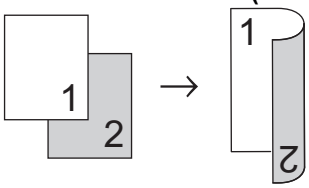

2–sided to 2–sided

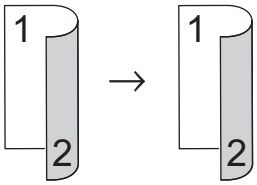

Landscape

1–sided to 2–sided (Long Edge Flip)

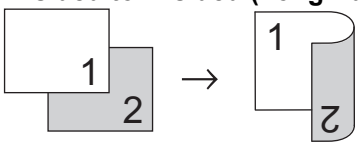

1–sided to 2–sided (Short Edge Flip)

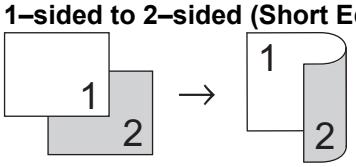

2–sided to 2–sided

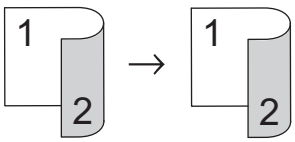

>> DCP-J572DW/MFC-J491DW
>> DCP-J772DW/MFC-J690DW/MFC-J890DW

DCP-J572DW/MFC-J491DW

1. Load your document.

2. (MFC-J491DW) Press (**COPY**).
3. Enter the number of copies in one of the following ways:
   - Press **-** or **+** on the control panel.
   - Enter the number of copies using the dial pad.
4. To sort multiple copies, press ▲ or ▼ to select the following:
   a. Select `[Stack/Sort]`. Press **OK**.
   b. Select `[Sort]`. Press **OK**.
5. Press ▲ or ▼ to select `[2-sided Copy]`. Press **OK**.
6. Do one of the following:
   - To make 2-sided copies from a 1-sided document, press ▲ or ▼ to select the following:
     a. To change the layout options, select `[Layout]`. Press **OK**.
     b. Select `[Long Edge Flip]` or `[Short Edge Flip]`. Press **OK**.
     c. Select `[1sided⇒2sided]`. Press **OK**.
   - To make 2-sided copies of a 2-sided document manually, press ▲ or ▼ to select `[2sided⇒2sided]`. Press **OK**.

Use the scanner glass to make 2-sided copies of a 2-sided document manually.

7. Press **Mono Start** or **Colour Start**. If you placed the document in the ADF (ADF models only), the machine scans the pages and starts printing.
8. If you are using the scanner glass, repeat the following steps for each page of the document:
   - Place the next page on the scanner glass, and then press ▶ to scan the page.
   - After scanning all the pages, press ◀ to start printing.

DO NOT touch the printed page until it is ejected the second time. The machine will print the first side and eject the paper, and then pull the paper in to print the second side.

If you experience smudged printouts or paper jams, follow these steps:

1. Press **Settings**.
2. Select `[General Setup]`. Press **OK**.
3. Select `[Maintenance]`. Press **OK**.
4. Select `[Print Setting Options]`. Press **OK**.
5. Select `[Reduce Smudging]`. Press **OK**.
6. Change settings. Press **OK**.

DCP-J772DW/MFC-J690DW/MFC-J890DW

1. Load your document.
2. Press `[Copy]`.
3. Enter the number of copies in one of the following ways:
   - Press `[-]` or `[+]` on the touchscreen.
   - Press ×01 to display the keyboard on the touchscreen, and then enter the number of copies using the touchscreen keyboard. Press `[OK]`.
4. To sort multiple copies, press `[Options]` > `[Stack/Sort]` > `[Sort]`.
5. Press ▲ or ▼ to display the `[2-sided Copy]` option, and then press it.
6. Do one of the following:
   - To make 2-sided copies from a 1-sided document, follow these steps:

a. To change the layout options, press [Layout], and then press [Long Edge Flip] or [Short Edge Flip].

b. Press [1-sided⇒2-sided].

- To make 2-sided copies of a 2-sided document manually, press [2-sided⇒2-sided].

Use the scanner glass to make 2-sided copies of a 2-sided document manually.

7. Review your settings on the touchscreen, and then press [OK].
8. Press [Mono Start] or [Colour Start]. If you placed the document in the ADF (ADF models only), the machine scans the pages and starts printing.
9. If you are using the scanner glass, repeat the following steps for each page of the document:
   - Place the next page on the scanner glass, and then press [Continue] to scan the page.
   - After scanning all the pages, press [Finish].

DO NOT touch the printed page until it is ejected the second time. The machine will print the first side and eject the paper, and then pull the paper in to print the second side.

If you experience smudged printouts or paper jams, press [Settings] > [Maintenance] > [Print Setting Options] > [Reduce Smudging], and then change settings.

Related Information

- Copy
- Change the Print Setting Options When Having Printing Problems

Copy an ID Card

Use the [2in1(ID)] feature to copy both sides of an identification card onto one page, keeping the original card size.

- Make sure the paper size is set to A4 or Letter.
- You may copy an identification card to the extent permitted under applicable laws. For more detailed information, see the *Product Safety Guide*.

>> DCP-J572DW/MFC-J491DW
>> DCP-J772DW/MFC-J690DW/MFC-J890DW

DCP-J572DW/MFC-J491DW

1. Place your identification card face down near the upper-left corner of the scanner glass.

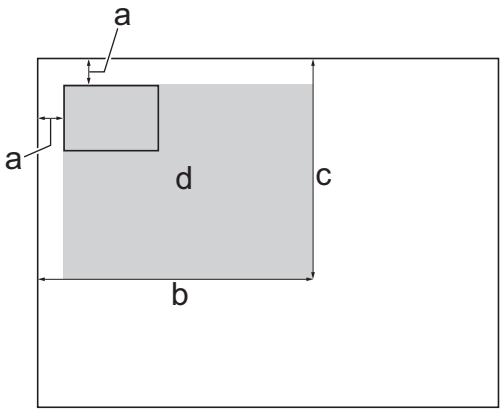

   a. 3 mm or greater (top, left)
   b. 207 mm
   c. 145 mm
   d. Scannable area

2. (MFC-J491DW) Press (**COPY**).
3. Enter the number of copies in one of the following ways:
   - Press **-** or **+** on the control panel.
   - Enter the number of copies using the dial pad.
4. Press ▲ or ▼ to select the following:
   a. Select [Page Layout]. Press **OK**.
   b. Select [2in1(ID)]. Press **OK**.
5. Press **Mono Start** or **Colour Start**.
   The machine starts scanning one side of the identification card.
6. After the machine has scanned the first side, turn over the identification card and press ▶ to scan the other side.

DCP-J772DW/MFC-J690DW/MFC-J890DW

1. Place your identification card face down near the upper-left corner of the scanner glass.

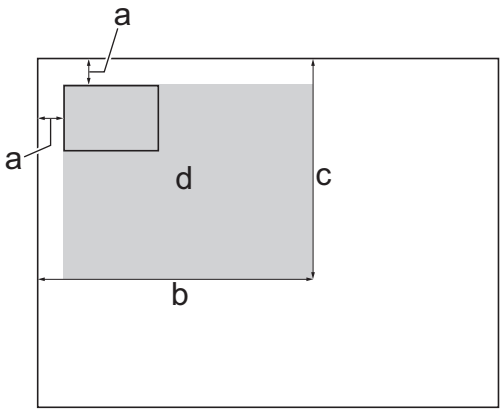

   a. 3 mm or greater (top, left)
   b. 207 mm
   c. 145 mm
   d. Scannable area

2. Press [Copy].
3. Enter the number of copies in one of the following ways:
   - Press [-] or [+] on the touchscreen.
   - Press ×01 to display the keyboard on the touchscreen, and then enter the number of copies using the touchscreen keyboard. Press [OK].
4. Press [Options] > [Page Layout] > [2in1(ID)].
5. Read and confirm the displayed list of settings you have selected. When you have finished changing settings, press [OK].
6. Press [Mono Start] or [Colour Start].

   The machine starts scanning one side of the identification card.
7. After the machine has scanned the first side, turn over the identification card and press [Continue] to scan the other side.

Related Information

- Copy

Copy in Ink Save Mode

Related Models: MFC-J890DW

When you select Ink Save Mode, the machine prints the colours lighter and emphasises the outlines of the images.

- The amount of ink that is saved varies depending on the type of documents printed.
- Ink Save Mode may make your printouts look different from your original document.
- The Ink Save Mode feature is supported by technology from Reallusion, Inc.

1. Load your document.
2. Press [Copy].
3. Enter the number of copies in one of the following ways:
   - Press [-] or [+] on the touchscreen.
   - Press ×01 to display the keyboard on the touchscreen, and then enter the number of copies using the touchscreen keyboard. Press [OK].
4. Press [Options] > [Advanced Settings] > [Ink Save Mode].
5. Read and confirm the displayed list of settings you have selected, and then press [OK].
6. When you have finished changing settings, press [Mono Start] or [Colour Start].

Related Information

- Copy

Copy Options

DCP-J572DW/MFC-J491DW

Option	Description	
Quality	Select the Copy resolution for your type of document.	
Paper Type	Select a paper type. If copying on special paper, set the machine for the type of paper you are using to get the best print quality.	
Paper Size	Select a paper size. If copying on paper other than A4 size, you must change the Paper Size setting.	
Enlarge/Reduce	100%	-
	Enlarge	Select an enlargement ratio for the next copy.
	Reduce	Select a reduction ratio for the next copy.
	Fit to Page	Adjusts the copy size to fit on the paper size you have set.
	Custom(25-400%)	Enter an enlargement or reduction ratio.
Density	Increase the density to make the text darker. Decrease the density to make the text lighter.	
Stack/Sort	Select to stack or sort multiple copies.	
	Stack 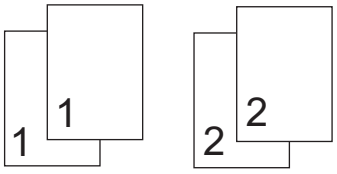	**Sort** 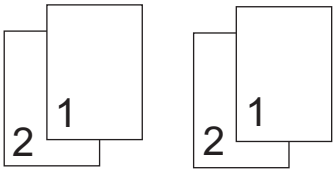
Page Layout	Make N in 1, 2 in 1 ID, or Poster copies.	
	4 in1 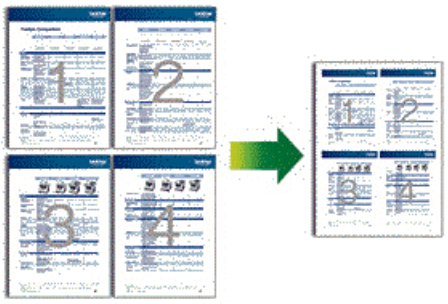	**Poster** 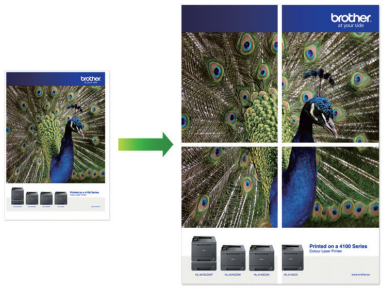
2-sided Copy	Select to copy on both sides of the paper. **1-sided→2-sided** 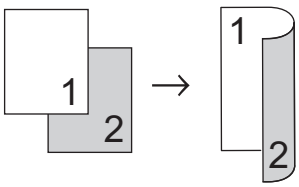 **2-sided→2-sided** 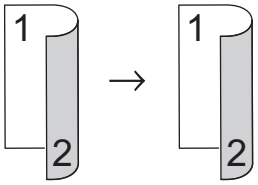	

Option	Description
Remove Background	Removes the document's background colour in copies. The white background becomes more apparent. This saves some ink and may make certain copies easier to read. 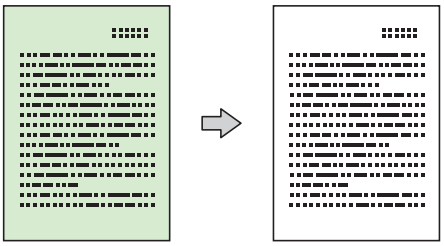
Set New Default	Saves the copy settings that you use most often by setting them as the default settings.
Factory Reset	Restores any changed copy settings to the factory settings.

DCP-J772DW/MFC-J690DW/MFC-J890DW

To change copy settings, press the [Options] button.

Option	Description	
Quality	Select the Copy resolution for your type of document.	
Paper Type	Select a paper type. If copying on special paper, set the machine for the type of paper you are using to get the best print quality.	
Paper Size	Select a paper size. If copying on paper other than A4 size, you must change the Paper Size setting.	
Enlarge/Reduce	100%	-
	Enlarge	Select an enlargement ratio for the next copy.
	Reduce	Select a reduction ratio for the next copy.
	Fit to Page	Adjusts the copy size to fit on the paper size you have set.
	Custom(25-400%)	Enter an enlargement or reduction ratio.
2-sided Copy	Select to copy on both sides of the paper. **1-sided→2-sided** 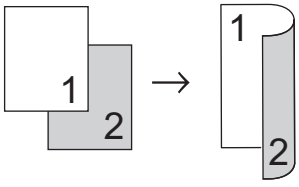 **2-sided→2-sided** 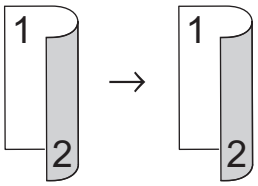	
Density	Increase the density to make the text darker. Decrease the density to make the text lighter.	
Remove Background Colour	Removes the document's background colour in copies. The white background becomes more apparent. This saves some ink and may make certain copies easier to read.	

Option	Description
	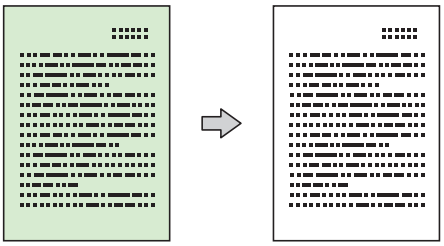
Stack/Sort	Select to stack or sort multiple copies. **Stack** 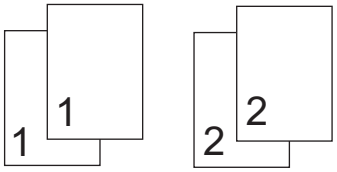 **Sort** 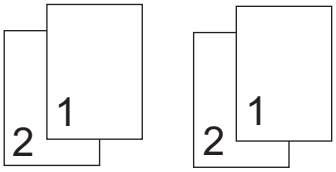
Page Layout	Make N in 1, 2 in 1 ID, or Poster copies. **4 in 1** 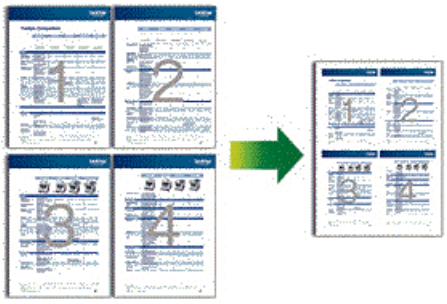 **Poster** 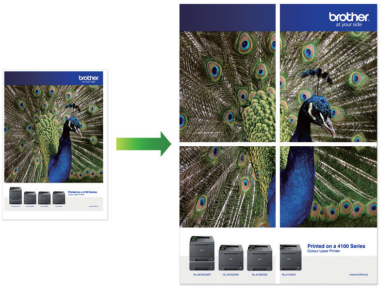
Advanced Settings (MFC-J890DW)	Ink Save Mode Prints colours lighter and emphasises the outlines of images. Thin Paper Copy Avoids bleeding through thin paper when copying. 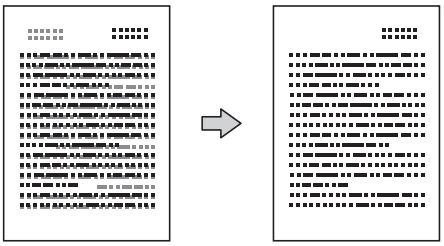

Option	Description
	Book Copy Corrects dark borders and skew when copying from the scanner glass. 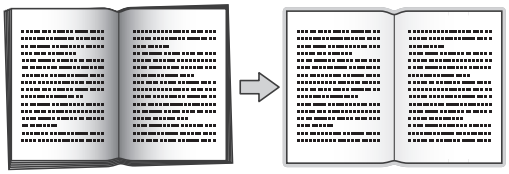
	Watermark Copy Places text in your document as a watermark.
Set New Default	Saves the copy settings that you use most often by setting them as the default settings.
Factory Reset	Restores any changed copy settings to the factory settings.

- You can save the current settings by pressing [Save as Shortcut].
- (MFC-J890DW)

  The Ink Save Mode, Thin Paper Copy, Book Copy and Watermark Copy features are supported by technology from Reallusion, Inc.

  REALLUSION

Related Information

- Copy
- Copy a Document

Fax

- Send a Fax
- Receive a Fax
- Voice Operations and Fax Numbers
- Telephone Services and External Devices
- Fax Reports
- PC-FAX

Send a Fax

- Send a Fax from Your Brother Machine
- Send a Fax Manually
- Send a Fax at the End of a Conversation
- Send the Same Fax to More than One Recipient (Broadcasting)
- Send a Fax in Real Time
- Send a Fax at a Specified Time (Delayed Fax)
- Change the Fax Auto Redial Setting
- Cancel a Fax in Progress
- Check and Cancel a Pending Fax
- Fax Options

Send a Fax from Your Brother Machine

Related Models: MFC-J491DW/MFC-J690DW/MFC-J890DW

>> MFC-J491DW
>> MFC-J690DW/MFC-J890DW

MFC-J491DW

1. Load your document in the ADF or place it on the scanner glass.
2. Press (**FAX**).

   The LCD displays:

   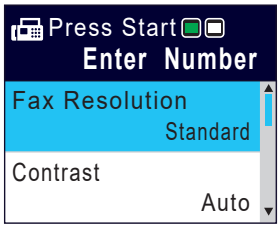

3. Enter the fax number in one of the following ways:
   - Dial Pad (Enter the fax number manually.)

     Press all digits of the number using the dial pad.
   - Redial (Redial the last number you dialled.)

     Press **Redial/Pause**.
   - Outgoing call (Select a number from the Outgoing Call history.)

     Press ▲ or ▼ to select the following:

     a. Select `[Call History]`. Press **OK**.

     b. Select `[Outgoing Call]`. Press **OK**.

     c. Select the number you want, and then press **OK**.

     d. Press ▶ to select `[Apply]`.
   - Caller ID (Select a number from the Caller ID history.)

     (Not available for Taiwan and some countries)

     Press ▲ or ▼ to select the following:

     a. Select `[Call History]`. Press **OK**.

     b. Select `[Caller ID History]`. Press **OK**.

     c. Select the number you want, and then press **OK**.

     d. Press ▶ to select `[Apply]`.
   - `[Address Book]` (Select a number from the Address Book.)

     Press ▲ or ▼ to select the following:

     a. Select `[Address Book]`. Press **OK**.

     b. Select `[Search]`. Press **OK**.

     c. Do one of the following:

     - Enter the two-digit Speed Dial number using the dial pad.
     - Select a number from the list in the following ways:

       i. Select `[Alphabetical Order]` or `[Numerical Order]`. Press **OK**.

       ii. Select the number you want. Press **OK**.

       iii. Press ▶ to select `[Apply]`.

4. To change the fax settings, press ▲ or ▼ to select the setting you want to change, and then press **OK**.
5. When finished, press **Mono Start** or **Colour Start**.
6. Do one of the following:
   - If you are using the ADF, the machine starts scanning and sending the document.
   - If you are using the scanner glass and pressed **Mono Start**, the machine starts scanning the first page.

     Go to the next step.
   - If you are using the scanner glass and pressed **Colour Start**, the LCD asks if you want to send a colour fax.

     Press ▶ to confirm. The machine starts dialling and sending the document.
7. When the LCD displays `[Next page?]`, do one of the following:
   - Press ▶ to scan another page. Place the next page on the scanner glass, and then press ▶. The machine starts scanning the page.

     Repeat this step for each additional page.
   - Press ◀ to send the fax when finished scanning pages. The machine starts sending the document.

MFC-J690DW/MFC-J890DW

1. Load your document in the ADF or place it on the scanner glass.
2. Press `[Fax]`.

(MFC-J890DW)
If `[Fax Preview]` is set to `[On]`, press `[Fax]` > `[Sending Faxes]`.

The touchscreen displays:

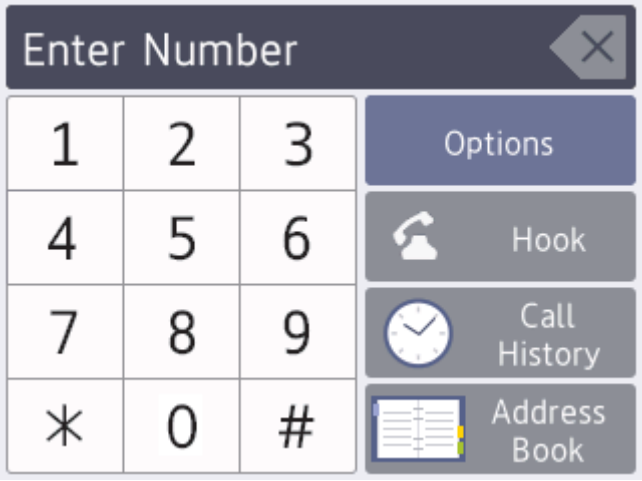

3. Enter the fax number in one of the following ways:
   - Dial Pad (Enter the fax number manually.)

     Press all digits of the number using the touchscreen.
   - Call History

     Press `[Redial]`, `[Outgoing Call]` or `[Caller ID History]`.

     If you select `[Outgoing Call]` or `[Caller ID History]`, select the number you want, and then press `[Apply]`.

     (Caller ID feature is not available for Taiwan and some countries)
   - Address Book

     Press `[Address Book]`.

     Do one of the following:

     - Select the number you want, and then press `[Apply]`.

- Press , and then enter the first letter of the name and press [OK]. Press the name you want to dial. If the name has two numbers, press the number you want. Press [Apply].

For more detailed information on how to store address book numbers, see the *Online User's Guide*.

4. To change the fax settings, press [Options].

   When finished, press [OK].

5. Press [Fax Start].
   - If you are using the ADF, the machine starts scanning and sending the document.
   - If you are using the scanner glass and selected [Mono] in the [Colour Setting], the machine starts scanning the first page.

     Go to the next step.
   - If you are using the scanner glass and selected [Colour] in the [Colour Setting], the touchscreen asks if you want to send a colour fax.

     Press [Yes (Colour fax)] to confirm. The machine starts dialling and sending the document.

6. When the touchscreen displays [Next page?], do one of the following:
   - Press [No] when finished scanning pages. The machine starts sending the document.
   - Press [Yes] to scan another page. Place the next page on the scanner glass, and then press [OK]. The machine starts scanning the page.

   Repeat this step for each additional page.

Related Information

- Send a Fax
- Fax Options

Send a Fax Manually

Related Models: MFC-J491DW/MFC-J690DW/MFC-J890DW

Manual fax transmission lets you hear the dialling, ringing and fax-receiving tones while sending a fax.

>> MFC-J491DW
>> MFC-J690DW/MFC-J890DW

MFC-J491DW

(Not available in South Africa)

1. Load your document.
2. Press (**FAX**).
3. Press **Hook** and listen for a dial tone.
4. Enter the fax number.
5. When you hear fax tones, press **Mono Start** or **Colour Start**.
   - If you are using the scanner glass, press ▶ to send a fax.

(For South Africa only)

To send a fax manually, do the following:

Load your document. To listen for a dial tone, pick up the handset of the external telephone. Dial the fax number using the external telephone. When you hear fax tones, press **Mono Start** or **Colour Start**. If you are using the scanner glass, press ▶ to send a fax.. Replace the handset of the external phone.

MFC-J690DW/MFC-J890DW

(Not available in South Africa)

1. Load your document.
2. Press [Fax].

If [Fax Preview] is set to [On], press [Fax] > [Sending Faxes].

3. Press [Hook] and listen for a dial tone.
4. Enter the fax number.
5. When you hear fax tones, press [Fax Start].
   - If you are using the scanner glass, press [Send].

(For South Africa only)

To send a fax manually, do the following:

Load your document. To listen for a dial tone, pick up the handset of the external telephone. Dial the fax number using the external telephone. When you hear fax tones, press and then press [Fax Start]. If you are using the scanner glass, press [Send]. Replace the handset of the external phone.

Related Information

- Send a Fax

Send a Fax at the End of a Conversation

Related Models: MFC-J491DW/MFC-J690DW/MFC-J890DW

At the end of a conversation, you can send a fax to the other party before you both hang up.

>> MFC-J491DW
>> MFC-J690DW/MFC-J890DW

MFC-J491DW

1. Ask the other party to wait for fax tones (beeps) and to press the Start key before hanging up.
2. Load your document.
3. Press **Mono Start** or **Colour Start**.
   - If you are using the scanner glass, press ▶ to send a fax.
4. Replace the handset of the external telephone.

MFC-J690DW/MFC-J890DW

1. Ask the other party to wait for fax tones (beeps) and to press the Start key before hanging up.
2. Load your document.
3. Press to display the [Fax Start] button.
4. Press [Fax Start].
   - If you are using the scanner glass, press [Send].
5. Replace the handset of the external telephone.

Related Information

- Send a Fax

Send the Same Fax to More than One Recipient (Broadcasting)

Related Models: MFC-J491DW/MFC-J690DW/MFC-J890DW

Use the Broadcasting feature to send the same fax to multiple fax numbers at the same time.

- This feature is available only for monochrome faxes.
- Address Book numbers must be stored in the machine's memory before they can be used in a broadcast.
- Group numbers must also be stored in the machine's memory before they can be used in a broadcast. Group numbers include many stored Address Book numbers for easier dialling.

>> MFC-J491DW
>> MFC-J690DW/MFC-J890DW

MFC-J491DW

You can include Groups, Address Book numbers and up to 50 manually-dialled numbers in the same broadcast.

If you did not use any of the Address Book numbers for Groups, you can broadcast faxes to as many as 90 different numbers.

1. Load your document.
2. Press (**FAX**).
3. Press ▲ or ▼ to select `[Broadcasting]` and then press **OK**.
4. Press ▲ or ▼ to select `[Add Number]` and then press **OK**.
5. You can add numbers to the broadcast in the following ways:
   - Enter a number using the dial pad:
     a. Press ▲ or ▼ to select `[Add Number]`, and then press **OK**.
     b. Enter a number using the dial pad, and then press **OK**.
   - Select a number from the Address Book:
     a. Press ▲ or ▼ to select `[Add from Address book]`, and then press **OK**.
     b. Press ▲ or ▼ to select `[Alphabetical Order]` or `[Numerical Order]`, and then press **OK**.
     c. Press ▲ or ▼ to select the Speed Dial name or number you want.
     d. Press ◀ or ▶ to select the check box labelled with the Speed Dial name or number, and then press **OK**.
   - Search a number in the Address Book:
     a. Press ▲ or ▼ to select `[Search in Address book]`, and then press **OK**.
     b. Press the first letter of the name using the dial pad, and then press **OK**.
     c. Press ▲ or ▼ to select the name, and then press **OK**.
     d. Press **OK** again.
6. When finished, press ▲ or ▼ to select `[Complete]`. Press **OK**.
7. Press **Mono Start**.
8. Do one of the following:
   - If you are using the ADF, the machine starts scanning and sending the document.
   - If you are using the scanner glass, the machine starts scanning the first page.

     When the LCD displays `[Next page?]`, do one of the following:

     - Press ▶ to scan another page. Place the next page on the scanner glass, and then press ▶. The machine starts scanning the page.

Repeat this step for each additional page.

- Press ◄ to send a fax when finished scanning pages. The machine starts sending the document.

If the [Out of Memory] message appears, press **Stop/Exit** to cancel.

MFC-J690DW/MFC-J890DW

You can include Groups, Address Book numbers and up to 50 manually-dialled numbers in the same broadcast.

If you did not use any of the Address Book numbers for Groups, you can broadcast faxes to as many as 250 different numbers.

1. Load your document.
2. Press [Fax].

(MFC-J890DW)

If [Fax Preview] is set to [On], press [Fax] > [Sending Faxes].

3. Press [Options] > [Broadcasting].
4. Press [Add Number].

   You can add numbers to the broadcast in the following ways:

   - Press [Add Number] and enter a fax number using the dial pad. Press [OK].
   - Press [Add from Address book]. Press ▲ or ▼ to display the numbers you want to add to the broadcast. Select the check boxes of the numbers you want to add.

     When finished, press [OK].
   - Press [Search in Address book]. Press the first letter of the name and press [OK]. Press the name, and then press the number you want to add.

   Repeat this step to enter additional fax numbers.
5. When finished, press [OK].
6. Press [Fax Start].
7. Do one of the following:

   - If you are using the ADF, the machine starts scanning and sending the document.
   - If you are using the scanner glass, the machine starts scanning the first page.

     When the touchscreen displays [Next page?], do one of the following:

     - Press [No] when finished scanning pages. The machine starts sending the document.
     - Press [Yes] to scan another page. Place the next page on the scanner glass, and then press [OK]. The machine starts scanning the page.

       Repeat this step for each additional page.

Related Information

- Send a Fax
- Cancel a Broadcast in Progress
- Set up Groups for Broadcasting
- Enter Text on Your Brother Machine

Cancel a Broadcast in Progress

Related Models: MFC-J491DW/MFC-J690DW/MFC-J890DW

While broadcasting you can cancel the fax currently being sent or the whole broadcast job.

>> MFC-J491DW
>> MFC-J690DW/MFC-J890DW

MFC-J491DW

1. Press **Settings**.
2. Press ▲ or ▼ to select the following:
   a. Select `[Fax]`. Press **OK**.
   b. Select `[Remaining Jobs]`. Press **OK**.

   The LCD displays the fax number being dialled and the broadcasting job number.
3. Press ▲ or ▼ to select the broadcasting job number you want to cancel and then press **OK**.
4. Do one of the following:
   - To cancel the entire broadcast, select the broadcasting job number and then press **OK**.

     Press ▶ to confirm or press ◀ to exit without cancelling.
   - To cancel the current number being dialled, select the name or number on the LCD and then press **OK**.

     Press ▶ to confirm or press ◀ to exit without cancelling.
   - To exit without cancelling, press **Stop/Exit**.
5. Press **Stop/Exit**.

MFC-J690DW/MFC-J890DW

1. Press to return to the Home screen.
2. Press .
3. Do one of the following:
   - To cancel the entire broadcast, press `[Entire Broadcast]`. Press `[Yes]` to confirm or press `[No]` to exit without cancelling.
   - To cancel the current number being dialled, press the name or number on the touchscreen. Press `[Yes]` to confirm or press `[No]` to exit without cancelling.
   - To exit without cancelling, press .

Related Information

- Send the Same Fax to More than One Recipient (Broadcasting)

Send a Fax in Real Time

Related Models: MFC-J491DW/MFC-J690DW/MFC-J890DW

When sending a fax, the machine scans the document into the memory before sending it. As soon as the telephone line is free, the machine starts dialling and sending. If you want to send an important document immediately without waiting for the machine to retrieve the scan from its memory, turn on [Real Time TX].

- If you are sending a colour fax or if the machine's memory is full and you are sending a monochrome fax from the ADF, the machine sends the document in real time (even if [Real Time TX] is set to [Off]).
- In Real Time Transmission, the automatic redial feature does not work when using the scanner glass.

>> MFC-J491DW
>> MFC-J690DW/MFC-J890DW

MFC-J491DW

1. Load your document.
2. Press (**FAX**).
3. Press ▲ or ▼ to select the following:
   a. Select [Real Time TX]. Press **OK**.
   b. Select [On] (or [Off]). Press **OK**.
4. Enter the fax number.
5. Press **Mono Start** or **Colour Start**.

MFC-J690DW/MFC-J890DW

1. Load your document.
2. Press [Fax].

(MFC-J890DW)
If [Fax Preview] is set to [On], press [Fax] > [Sending Faxes].

3. Press [Options] > [Real Time TX].
4. Press [On] (or [Off]).
5. Press [OK].
6. Enter the fax number.
7. Press [Fax Start].

Related Information

- Send a Fax

Send a Fax at a Specified Time (Delayed Fax)

Related Models: MFC-J690DW/MFC-J890DW

You can store up to 50 faxes in the machine's memory to be sent within the next twenty-four hour period.

This feature is available only for monochrome faxes.

1. Load your document.
2. Press [Fax].

(MFC-J890DW)
If [Fax Preview] is set to [On], press [Fax] > [Sending Faxes].

3. Press [Options] > [Delayed Fax].
4. Press [Delayed Fax].
5. Press [On].
6. Press [Set Time].
7. Enter the time you want the fax to be sent using the touchscreen. Press [OK].

The number of pages you can scan into the memory depends on the amount and type of data.

8. Press [OK].
9. Enter the fax number.
10. Press [Fax Start].
    - If you are using the scanner glass, go to the next step.
11. When the touchscreen displays [Next page?], do one of the following:
    - Press [No] when finished scanning pages.
    - Press [Yes] to scan another page. Place the next page on the scanner glass, and then press [OK]. The machine starts scanning the page.

    Repeat this step for each additional page.

Related Information

- Send a Fax

Change the Fax Auto Redial Setting

Related Models: MFC-J491DW/MFC-J690DW/MFC-J890DW

If you are sending a fax automatically and the line is busy when the Fax Auto Redial setting is set to [On], the machine redials up to three times at five minute intervals.

The default setting is [On].

>> MFC-J491DW
>> MFC-J690DW/MFC-J890DW

MFC-J491DW

1. Press **Settings**.
2. Press ▲ or ▼ to select the following:
   a. Select [Initial Setup]. Press **OK**.
   b. Select [Fax Auto Redial]. Press **OK**.
   c. Select [On] (or [Off]). Press **OK**.
3. Press **Stop/Exit**.

MFC-J690DW/MFC-J890DW

1. Press [Settings] > [All Settings] > [Initial Setup] > [Fax Auto Redial].
2. Press [On] or [Off].
3. Press .

Related Information

- Send a Fax

Cancel a Fax in Progress

Related Models: MFC-J491DW/MFC-J690DW/MFC-J890DW

>> MFC-J491DW
>> MFC-J690DW/MFC-J890DW

MFC-J491DW

1. Press **Stop/Exit** to cancel a fax that is already in progress.
2. When you press **Stop/Exit** while the machine is dialling or sending, the LCD displays `[Cancel Job?]`. Press ▶ to confirm.

MFC-J690DW/MFC-J890DW

1. Press to return to the Home screen.
2. Press to cancel a fax that is already in progress.
3. When you press while the machine is dialling or sending, the touchscreen displays `[Cancel Job?]`. Press `[Yes]`.

Related Information

- Send a Fax
- Telephone and Fax Problems

Check and Cancel a Pending Fax

Related Models: MFC-J491DW/MFC-J690DW/MFC-J890DW

Follow these steps to view or to cancel faxes stored in the machine's memory and waiting to be sent. If there are no fax jobs in memory, the LCD displays [No Jobs Waiting]. You can cancel a fax job before it is sent.

>> MFC-J491DW
>> MFC-J690DW/MFC-J890DW

MFC-J491DW

1. Press **Settings**.
2. Press ▲ or ▼ to select the following:
   a. Select [Fax]. Press **OK**.
   b. Select [Remaining Jobs]. Press **OK**.
3. Do the following for each fax job you want to check or cancel:
   a. Press ▲ or ▼ to scroll through the waiting jobs. If needed, select the job you want to cancel and then press **OK**.
   b. Press ▶ to confirm or press ◀ to exit without cancelling.
4. When finished, press **Stop/Exit**.

MFC-J690DW/MFC-J890DW

1. Press [Settings] > [All Settings] > [Fax] > [Remaining Jobs].
2. Do the following for each fax job you want to check or cancel:
   a. Press ▲ or ▼ to scroll through the waiting jobs. If needed, press the job you want to cancel.
   b. Press [OK].
   c. Press [Yes] to confirm or press [No] to exit without cancelling.
3. When finished, press .

Related Information

- Send a Fax
- Telephone and Fax Problems

Fax Options

Related Models: MFC-J491DW/MFC-J690DW/MFC-J890DW

MFC-J491DW

To change fax-sending settings, press (**FAX**).

Option	Description
Fax Resolution	Set the resolution for outgoing faxes. The fax quality often can be improved by changing the Fax Resolution.
Contrast	Adjust the contrast. If your document is very light or very dark, changing the contrast may improve the fax quality.
Glass Scan Size	Adjust the scan area of the scanner glass to the size of the document. See *Related Information*: *Scanner Specifications* in *Specifications*.
Broadcasting (monochrome only)	Send the same fax message to more than one fax number at the same time.
Real Time TX	Send a fax immediately without waiting for the machine to retrieve the scan from its memory.
Overseas Mode	Set to On if you have difficulty sending faxes overseas.
Call History	Select a number from the Call History.
Address Book	Select a number from the Address Book.
Set New Default	Save your settings as the default.
Factory Reset	Restore all settings back to the factory settings.

MFC-J690DW/MFC-J890DW

To change fax-sending settings, press the [Options] button.

Option	Description
Fax Resolution	Set the resolution for outgoing faxes. The fax quality often can be improved by changing the Fax Resolution.
Contrast	Adjust the contrast. If your document is very light or very dark, changing the contrast may improve the fax quality.
Glass Scan Size	Adjust the scan area of the scanner glass to the size of the document. See *Related Information*: *Scanner Specifications* in *Specifications*.
Broadcasting (monochrome only)	Send the same fax message to more than one fax number at the same time.
Preview (MFC-J890DW) (monochrome only)	• Preview a fax message before you send it. • You cannot send a colour fax when Preview is set to On.
Colour Setting	Set whether faxes are sent in monochrome or colour.

Option	Description
	• Colour faxes cannot be stored in the machine's memory and the machine sends them immediately. • Use the ADF to send colour faxes with multiple pages. • (MFC-J890DW) You cannot send a colour fax when Preview is set to On.
Delayed Fax (monochrome only)	Set the time of day the delayed faxes will be sent.
Batch TX (monochrome only)	Economise by sending all delayed faxes scheduled for the same time and fax number as one fax to save transmission time.
Real Time TX	Send a fax immediately without waiting for the machine to retrieve the scan from its memory.
Overseas Mode	Set to On if you have difficulty sending faxes overseas.
Call History	Select a number from the Call History.
Address Book	Select a number from the Address Book.
Set New Default	Save your settings as the default.
Factory Reset	Restore all settings back to the factory settings.

You can save the current settings by pressing [Save as Shortcut].

You will be asked if you want to make this a One Touch Shortcut. Follow the LCD instructions.

Related Information

- Send a Fax
- Send a Fax from Your Brother Machine
- Specifications

Receive a Fax

- Receive Mode Settings
- Fax Preview
- Shrink Page Size of an Oversized Incoming Fax
- Set the Fax Receive Stamp
- Receive a Fax at the End of a Telephone Conversation
- Memory Receive Options
- Remote Fax Retrieval

Receive Mode Settings

- Receive Modes Overview
- Choose the Correct Receive Mode
- Set the Number of Rings Before the Machine Answers (Ring Delay)
- Set the F/T Ring Time (Pseudo/Double-ring)
- Set Fax Detect

Receive Modes Overview

Related Models: MFC-J491DW/MFC-J690DW/MFC-J890DW

Some receive modes answer automatically ([Fax Only] and [Fax/Tel]). You may want to change the Ring Delay before using these modes.

Fax Only

[Fax Only] mode automatically answers every call as a fax.

Fax/Tel

[Fax/Tel] mode helps you manage incoming calls, by recognising whether they are fax or voice calls and handling them in one of the following ways:

- Faxes will be received automatically.
- Voice calls will start the F/T ring to tell you to pick up the line. The F/T ring is a pseudo/double-ring made by your machine.

Manual

To receive a fax in [Manual] mode, lift the handset of the external telephone or press the Hook [1] button. When you hear fax tones (short repeating beeps), press the Start button, and then select [Receive] to receive a fax. You can also use the Fax Detect feature to receive faxes by lifting a handset on the same line as the machine.

External TAD

[External TAD] mode lets an external answering device manage your incoming calls.

Incoming calls will be handled in the following ways:

- Faxes will be received automatically.
- Voice callers can record a message on the external TAD.

Related Information

- Receive Mode Settings
- Set the Number of Rings Before the Machine Answers (Ring Delay)
- Set the F/T Ring Time (Pseudo/Double-ring)
- Set Fax Detect
- Connect an External TAD

1 Not available in South Africa

Choose the Correct Receive Mode

Related Models: MFC-J491DW/MFC-J690DW/MFC-J890DW

You must choose a Receive Mode depending on the external devices and telephone services you have on your line.

By default, your machine automatically will receive any faxes that are sent to it. The diagram below will help you select the correct mode.

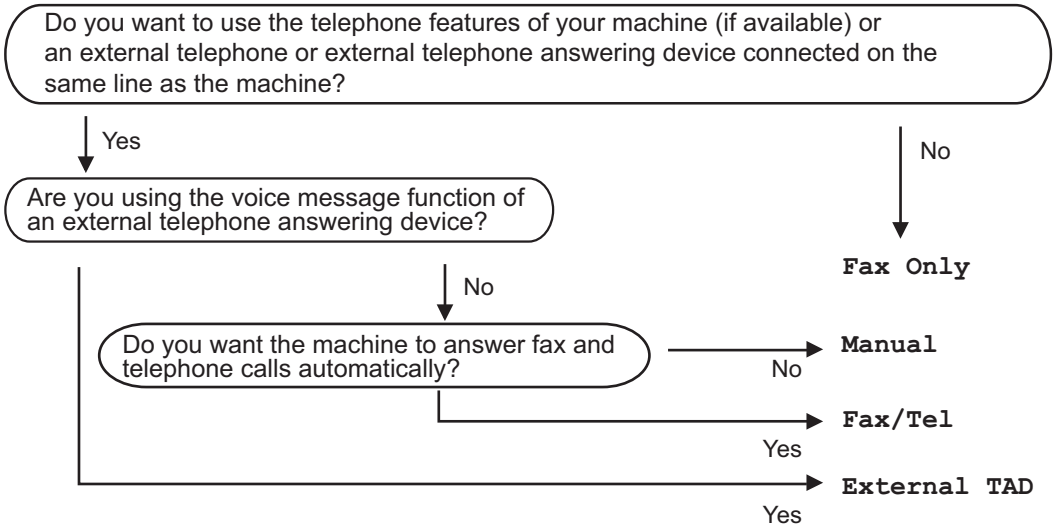

>> MFC-J491DW
>> MFC-J690DW/MFC-J890DW

MFC-J491DW

1. Press **Settings**.
2. Press ▲ or ▼ to select the following:
   a. Select `[Fax]`. Press **OK**.
   b. Select `[Setup Receive]`. Press **OK**.
   c. Select `[Receive Mode]`. Press **OK**.

(For some countries)
If you cannot change the `[Receive Mode]` option, make sure the Distinctive Ring feature is set to `[Off]`.
(For New Zealand)
If you cannot change the `[Receive Mode]` option, make sure the FaxAbility feature is set to `[Off]`.

3. Press ▲ or ▼ to select the `[Fax Only]`, `[Fax/Tel]`, `[External TAD]`, or `[Manual]` option, and then press **OK**.
4. Press **Stop/Exit**.

MFC-J690DW/MFC-J890DW

1. Press `[Settings]` > `[All Settings]` > `[Fax]` > `[Setup Receive]` > `[Receive Mode]`.

(For some countries)
If you cannot change the `[Receive Mode]` option, make sure the Distinctive Ring feature is set to `[Off]`.
(For New Zealand)
If you cannot change the `[Receive Mode]` option, make sure the FaxAbility feature is set to `[Off]`.

2. Press ▲ or ▼ to display the [Fax Only], [Fax/Tel], [External TAD], or [Manual] option, and then press the option you want.
3. Press .

Related Information

- Receive Mode Settings
- Distinctive Ring
- Remote Retrieval Commands
- Connect an External TAD
- Telephone and Fax Problems

Set the Number of Rings Before the Machine Answers (Ring Delay)

Related Models: MFC-J491DW/MFC-J690DW/MFC-J890DW

When somebody calls your machine, you will hear the normal telephone ring sound. The number of rings is set in the Ring Delay option.

- The Ring Delay setting sets the number of times the machine rings before it answers in [Fax Only] and [Fax/Tel] modes.
- If you have external or extension telephones on the same line as the machine, select the maximum number of rings.

>> MFC-J491DW
>> MFC-J690DW/MFC-J890DW

MFC-J491DW

1. Press **Settings**.
2. Press ▲ or ▼ to select the following:
   a. Select [Fax]. Press **OK**.
   b. Select [Setup Receive]. Press **OK**.
   c. Select [Ring Delay]. Press **OK**.
   d. Select the number of times you want the line to ring before the machine answers. Press **OK**.

- If you select [0], the machine will answer immediately and the line will not ring at all (available only for some countries).

3. Press **Stop/Exit**.

MFC-J690DW/MFC-J890DW

1. Press [Settings] > [All Settings] > [Fax] > [Setup Receive] > [Ring Delay].
2. Press the number of times you want the line to ring before the machine answers.

If you select [0], the machine will answer immediately and the line will not ring at all (available only for some countries).

3. Press .

Related Information

- Receive Mode Settings
- Receive Modes Overview
- Operation from External and Extension Telephones
- Set Fax Detect
- Telephone and Fax Problems

Set the F/T Ring Time (Pseudo/Double-ring)

Related Models: MFC-J491DW/MFC-J690DW/MFC-J890DW

When you set the Receive Mode to [Fax/Tel], if the call is a fax, your machine will receive it automatically. However, if it is a voice call, the machine will sound the F/T ring (pseudo/double-ring) for the time you set in the F/T Ring Time option. When you hear the F/T ring, it means that a voice caller is on the line.

Because the F/T ring is a setting only on your Brother machine, extension and external telephones will not ring; however, you can still answer the machine's call on any telephone.

>> MFC-J491DW
>> MFC-J690DW/MFC-J890DW

MFC-J491DW

1. Press **Settings**.
2. Press ▲ or ▼ to select the following:
   a. Select [Fax]. Press **OK**.
   b. Select [Setup Receive]. Press **OK**.
   c. Select [F/T Ring Time]. Press **OK**.
   d. Select how long the machine will double-ring to alert you to a voice call. Press **OK**.
3. Press **Stop/Exit**.

Even if the caller hangs up during the pseudo/double-ringing, the machine will continue to ring for the set time.

MFC-J690DW/MFC-J890DW

1. Press [Settings] > [All Settings] > [Fax] > [Setup Receive] > [F/T Ring Time].
2. Press how long the machine will double-ring to alert you to a voice call.
3. Press .

Even if the caller hangs up during the pseudo/double-ringing, the machine will continue to ring for the set time.

Related Information

- Receive Mode Settings
- Receive Modes Overview
- Operation from External and Extension Telephones

Set Fax Detect

Related Models: MFC-J491DW/MFC-J690DW/MFC-J890DW

If Fax Detect is On: The machine receives a fax call automatically, even if you answer the call. When the message that your machine is receiving a fax appears on the LCD or when you hear “chirps” through the handset you are using, just replace the handset. Your machine will do the rest.

If Fax Detect is Off: If you are at the machine and answer a fax call by lifting the handset, press the Start button, and then select [Receive] to receive the fax. If you answered at an extension or external telephone, press ***51** (***91** for New Zealand).

- If Fax Detect is set to [On], but your machine does not connect a fax call when you lift an extension or external telephone handset, press the remote activation code ***51** (***91** for New Zealand).
- If you send faxes from a computer on the same telephone line and the machine intercepts them, set Fax Detect to [Off].

>> MFC-J491DW
>> MFC-J690DW/MFC-J890DW

MFC-J491DW

1. Press **Settings**.
2. Press ▲ or ▼ to select the following:
   a. Select [Fax]. Press **OK**.
   b. Select [Setup Receive]. Press **OK**.
   c. Select [Fax Detect]. Press **OK**.
   d. Select [On] (or [Off]). Press **OK**.
3. Press **Stop/Exit**.

MFC-J690DW/MFC-J890DW

1. Press [Settings] > [All Settings] > [Fax] > [Setup Receive] > [Fax Detect].
2. Press [On] (or [Off]).
3. Press .

Related Information

- Receive Mode Settings
- Receive Modes Overview
- Set the Number of Rings Before the Machine Answers (Ring Delay)
- Operation from External and Extension Telephones
- Use the Remote Codes
- Telephone and Fax Problems

Fax Preview

Use the Fax Preview feature to view received faxes on the LCD.

- Set Fax Preview to On
- Preview New Faxes

Set Fax Preview to On

Related Models: MFC-J890DW

- This feature is available only for monochrome faxes.
- When Fax Preview is turned on, a backup copy of received faxes will not be printed for Fax Forwarding, PC-Fax Receiving and Forward to Cloud operations, even if you set Backup Print to On.
- Although printed faxes show the received date and time when Fax Receive Stamp is turned on, the Fax Preview screen will not display the received date and time.

1. Press `[Settings]`.
2. Press `[Fax Preview]`.
3. Press `[On]` (or `[Off]`).

   The touchscreen displays a message saying future received faxes will not be printed.
4. Press `[Yes]`.
5. Press .

If faxes are stored in the memory when you change Fax Preview to Off, do one of the following:

- If you do not want to print the stored faxes, press `[Continue]`.
  Press `[Yes]` to confirm.

  Your faxes will be deleted.
- To print all the stored faxes, press `[Print All Faxes Before Delete]`.
- If you do not want to turn off Fax Preview, press `[Cancel]`.

Related Information

- Fax Preview

Preview New Faxes

Related Models: MFC-J890DW

When a fax is received, a message appears on the LCD.

- This feature is available only for monochrome faxes.
- To see a fax you already previewed, press [Fax] and [Received Faxes].

1. Press to view new faxes.

2. The fax list includes old and new faxes. A blue mark appears next to new faxes.
   Press the fax you want.

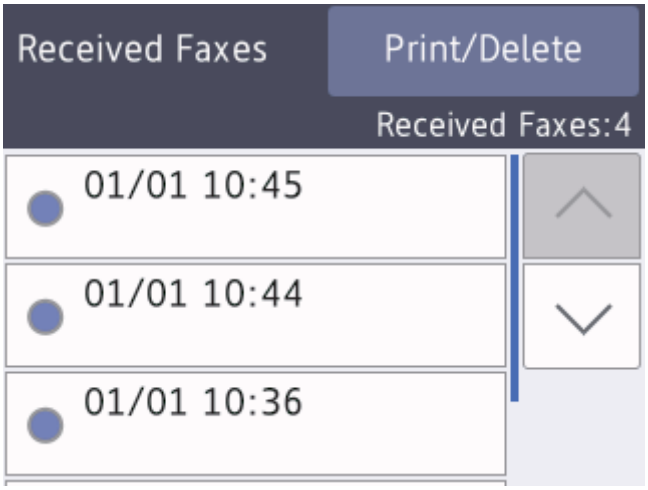

If you want to print or delete all the faxes in the list, press [Print/Delete].
Do one of the following:

- Press [Print All(New Faxes)] to print all faxes you have not yet viewed.
- Press [Print All(Old Faxes)] to print all faxes you have viewed.
- Press [Delete All(New Faxes)] to delete all faxes you have not yet viewed.
- Press [Delete All(Old Faxes)] to delete all faxes you have viewed.

3. Perform the following operations by pressing the buttons shown in the table:

Button	Result
	Enlarge the fax.
	Reduce the fax.
or	Scroll vertically.
or	Scroll horizontally.
	Rotate the fax clockwise.
	Delete the fax. Press `Yes` to confirm.
	Go back to the previous page.
	Go to the next page.
	Go back to the fax list.
`Start`	Print the fax. If the fax is a single page, it starts printing. A touchscreen message asks if you want to delete the fax from the machine's memory. To delete the fax, press `Yes`. To keep the fax in the machine's memory, press `No`. If the fax has multiple pages, do one of the following: • Press `Print All Pages` to print the whole message. A touchscreen message asks if you want to delete the fax from the machine's memory. To delete the fax, press `Yes`. To keep the fax in the machine's memory, press `No`. • Press `Print Displayed Only` to print only the displayed page. • Press `Print From Displayed` to print from the displayed page to the last page.

- If your fax is large there may be a delay before it is displayed.
- The touchscreen displays the current page number and total pages of the fax message.

4. Press .

Related Information

- Fax Preview

Shrink Page Size of an Oversized Incoming Fax

Related Models: MFC-J491DW/MFC-J690DW/MFC-J890DW

When the [Auto Reduction] feature is [On], your Brother machine reduces any oversized incoming fax page to fit on your paper. The machine calculates the reduction ratio using the page size of the fax, and your Paper Size setting.

>> MFC-J491DW
>> MFC-J690DW/MFC-J890DW

MFC-J491DW

1. Press **Settings**.
2. Press ▲ or ▼ to select the following:
   a. Select [Fax]. Press **OK**.
   b. Select [Setup Receive]. Press **OK**.
   c. Select [Auto Reduction]. Press **OK**.
   d. Select [On] (or [Off]). Press **OK**.
3. Press **Stop/Exit**.

MFC-J690DW/MFC-J890DW

1. Press [Settings] > [All Settings] > [Fax] > [Setup Receive] > [Auto Reduction].
2. Press [On] (or [Off]).
3. Press .

Related Information

- Receive a Fax
- Paper Settings
- Paper Handling and Printing Problems

Set the Fax Receive Stamp

Related Models: MFC-J491DW/MFC-J690DW/MFC-J890DW

Set the machine to print the date and time of receipt at the top of each incoming fax page. Make sure you have set the current date and time on the machine.

This feature is available only for monochrome faxes.

>> MFC-J491DW
>> MFC-J690DW/MFC-J890DW

MFC-J491DW

1. Press **Settings**.
2. Press ▲ or ▼ to select the following:
   a. Select `[Fax]`. Press **OK**.
   b. Select `[Setup Receive]`. Press **OK**.
   c. Select `[Fax Rx Stamp]`. Press **OK**.
   d. Select `[On]` (or `[Off]`). Press **OK**.
3. Press **Stop/Exit**.

MFC-J690DW/MFC-J890DW

1. Press `[Settings]` > `[All Settings]` > `[Fax]` > `[Setup Receive]` > `[Fax Rx Stamp]`.
2. Press `[On]` (or `[Off]`).
3. Press .

Related Information

- Receive a Fax

Receive a Fax at the End of a Telephone Conversation

Related Models: MFC-J491DW/MFC-J690DW/MFC-J890DW

If you are speaking on the telephone connected to your Brother machine and the other party is also speaking on a telephone connected to his fax machine, at the end of the conversation, the other party can send you a fax before you both hang up.

- Your machine's ADF must be empty.

>> MFC-J491DW
>> MFC-J690DW/MFC-J890DW

MFC-J491DW

1. Ask the other party to load the fax and to press the Start or Send key.
2. When you hear CNG tones (slow, repeated beeps), press **Mono Start** or **Colour Start**.
3. Press ◄ to receive the fax.
4. Replace the external handset.

MFC-J690DW/MFC-J890DW

1. Ask the other party to load the fax and to press the Start or Send key.
2. Press to display the [Fax Start] button.
3. When you hear CNG tones (slow, repeated beeps), press [Fax Start].
4. Press [Receive] to receive the fax.
5. Replace the external handset.

Related Information

- Receive a Fax

Memory Receive Options

Use Memory Receive options to direct incoming faxes while you are away from the machine. You can use only one Memory Receive option at a time.

Memory Receive can be set to:

- Fax Forwarding (MFC-J690DW/MFC-J890DW)
- Fax Storage (MFC-J690DW/MFC-J890DW)
- PC-Fax Receive
- Forward to Cloud (MFC-J690DW/MFC-J890DW)

  The machine forwards your received faxes to the online services.
- Off

This feature is available only for monochrome faxes.

- Forward Incoming Faxes to Another Machine
- Store Incoming Faxes in the Machine's Memory
- Use PC-Fax Receive to Transfer Received Faxes to Your Computer (Windows only)
- Change Memory Receive Options
- Turn Off Memory Receive
- Print a Fax Stored in the Machine's Memory
- Turn On FaxForward to Cloud or E-mail

Forward Incoming Faxes to Another Machine

Related Models: MFC-J690DW/MFC-J890DW

Use the Fax Forwarding feature to automatically forward your incoming faxes to another machine.

This feature is available only for monochrome faxes.

1. Press [Settings] > [All Settings] > [Fax] > [Setup Receive] > [Memory Receive].
2. Press ▲ or ▼ to display the [Fax Forward] option, and then press it.
3. Enter the forwarding fax number (up to 20 digits) using the dial pad.
   Press [OK].
4. Press [Backup Print: On] or [Backup Print: Off].

- If you select [Backup Print: On], the machine prints received faxes at your machine so you will have a copy.
- (MFC-J890DW)
  When Fax Preview is turned on, a backup copy of received faxes will not be printed, even if you select [Backup Print: On].
- If you receive a colour fax, your machine only prints the colour fax and does not forward it to the Fax Forwarding number you programmed.

5. Press .

Related Information

- Memory Receive Options

Store Incoming Faxes in the Machine's Memory

Related Models: MFC-J690DW/MFC-J890DW

Use the Fax Storage feature to store incoming faxes in the machine's memory. Retrieve your stored fax messages from your fax machine when you are at another location using the Remote Retrieval commands. Your machine prints a backup copy of each stored fax.

- This feature is available only for monochrome faxes.

1. Press [Settings] > [All Settings] > [Fax] > [Setup Receive] > [Memory Receive].
2. Press ▲ or ▼ to display the [Fax Storage] option, and then press it.
3. Press .

Related Information

- Memory Receive Options
- Forward Faxes Remotely
- Print a Fax Stored in the Machine's Memory
- Remote Retrieval Commands

Use PC-Fax Receive to Transfer Received Faxes to Your Computer (Windows only)

Related Models: MFC-J491DW/MFC-J690DW/MFC-J890DW

Turn on the PC-Fax Receive feature, automatically store incoming faxes to your machine's memory, and then send them to your computer. Use your computer to view and store these faxes.

- This feature is available only for monochrome faxes. When you receive a colour fax, your machine prints the colour fax but does not send the fax to your computer.
- Before you can set up PC-Fax Receive, you must install the Brother software and drivers on your computer. Make sure your computer is connected and turned on. You must have the PC-FAX Receiving software running on your computer.

Even if your computer is turned off, your machine will receive and store faxes in its memory. When you start your computer and the PC-FAX Receiving software runs, your machine transfers faxes to your computer automatically.

>> MFC-J491DW
>> MFC-J690DW/MFC-J890DW

MFC-J491DW

1. Press **Settings**.
2. Press ▲ or ▼ to select the following:
   a. Select `[Fax]`. Press **OK**.
   b. Select `[Setup Receive]`. Press **OK**.
   c. Select `[PC Fax Receive]`. Press **OK**.
   d. Select `[On]`. Press **OK**.
      The LCD displays the message `[Run the PC-Fax Receive program on your computer.]`.
   e. Press ▶.
   f. Select `[<USB>]` or the name of the destination computer you want to receive faxes if you are on a network. Press **OK**.
   g. Select `[Backup Print: On]` or `[Backup Print: Off]`. Press **OK**.
3. Press **Stop/Exit**.

To change the destination computer, repeat these steps.

MFC-J690DW/MFC-J890DW

1. Press `[Settings]` > `[All Settings]` > `[Fax]` > `[Setup Receive]` > `[PC Fax Receive]`.
2. Press `[On]`.
   The touchscreen displays the message `[Run the PC-Fax Receive program on your computer.]`
3. Press `[OK]`.
4. Press `[<USB>]` or press the name of the destination computer you want to receive faxes if you are on a network. Press `[OK]`.
5. Press `[Backup Print: On]` or `[Backup Print: Off]`.

(MFC-J890DW)
When Fax Preview is turned on, a backup copy of received faxes will not be printed, even if you select [Backup Print: On].

6. Press .

To change the destination computer, repeat these steps.

Related Information

- Memory Receive Options
- Transfer Your Faxes or Fax Journal Report
- Transfer Faxes to Your Computer
- Receive Faxes Using PC-FAX Receive (Windows)

Change Memory Receive Options

Related Models: MFC-J690DW/MFC-J890DW

If there are faxes in your machine's memory when you change any Memory Receive option, the LCD displays one of the following questions:

- **If received faxes have already been printed, the touchscreen displays `[Erase all documents?]`**
  - If you press `[Yes]`, faxes in the memory will be erased before the setting changes.
  - If you press `[No]`, faxes in the memory will not be erased and the setting will be unchanged.
- **If unprinted faxes are in the machine's memory, the touchscreen displays `[Print all faxes?]`**
  - If you press `[Yes]`, faxes in the memory will be printed before the setting changes.
  - If you press `[No]`, faxes in the memory will not be printed and the setting will be unchanged.
- If received faxes are left in the machine's memory when you change to `[PC Fax Receive]` from another option (`[Fax Forward]`, `[Forward to Cloud]`, or `[Fax Storage]`), press `[<USB>]` or the name of the computer if you are on a network, and then press `[OK]`. You will be asked if you want to turn on Backup Print.

  The touchscreen displays:

  `[Send Fax to PC?]`
  - If you press `[Yes]`, faxes in the memory will be sent to your computer before the setting changes.
  - If you press `[No]`, faxes in the memory will not be erased and the setting will be unchanged.

Related Information

- Memory Receive Options
- Turn Off Memory Receive

Turn Off Memory Receive

Related Models: MFC-J690DW/MFC-J890DW

Turn off Memory Receive if you do not want the machine to save or transfer incoming faxes.

1. Press [Settings] > [All Settings] > [Fax] > [Setup Receive] > [Memory Receive].
2. Press [Off].

The touchscreen displays [Print all faxes?] or [Erase all documents?] if received faxes are in your machine's memory.

3. Press .

Related Information

- Memory Receive Options
- Change Memory Receive Options
- Error and Maintenance Messages
- Telephone and Fax Problems

Print a Fax Stored in the Machine's Memory

Related Models: MFC-J491DW/MFC-J690DW/MFC-J890DW

- This feature is available only for monochrome faxes.
- After you print the fax, it is erased from the machine's memory.

>> MFC-J491DW
>> MFC-J690DW/MFC-J890DW

MFC-J491DW

If you turn on [PC Fax Receive], your machine will receive and store your faxes in its memory even when your PC is turned off.

1. Press **Settings**.
2. Press ▲ or ▼ to select the following:
   a. Select [Fax]. Press **OK**.
   b. Select [Print Document]. Press **OK**.
3. Press ▶.

MFC-J690DW/MFC-J890DW

If you select [Fax Storage], you can print all faxes from the memory.

1. Press [Settings] > [All Settings] > [Fax] > [Print Document].

You can also print the faxes from the memory by pressing [Stored Faxes] on the touchscreen.

2. Press [Yes].

Related Information

- Memory Receive Options
- Store Incoming Faxes in the Machine's Memory
- Error and Maintenance Messages
- Telephone and Fax Problems

Remote Fax Retrieval

Use Remote Retrieval to call your machine from any touch-tone telephone or fax machine, and use a remote access code and remote commands to retrieve fax messages.

- Set a Remote Access Code
- Use Your Remote Access Code
- Remote Retrieval Commands
- Forward Faxes Remotely
- Change the Fax Forwarding Number

Set a Remote Access Code

Related Models: MFC-J690DW/MFC-J890DW

Set a Remote Access Code to access and control your Brother machine even when you are away from it.

1. Press [Settings] > [All Settings] > [Fax] > [Remote Access].
2. Enter a three-digit code using the numbers [0] through [9], [*], or [#] using the dial pad (The preset '*' cannot be changed).

   Press [OK].

- DO NOT use the same code used for your Remote Activation Code (*51) (*91 for New Zealand) or Remote Deactivation Code (#51) (#91 for New Zealand).
- To delete your code, press and hold to restore the inactive setting (- - - *), and then press [OK].

3. Press .

Related Information

- Remote Fax Retrieval
- Use Your Remote Access Code
- Operation from External and Extension Telephones
- Use the Remote Codes

Use Your Remote Access Code

Related Models: MFC-J690DW/MFC-J890DW

1. When away from your Brother machine, dial your fax number from a touch-tone telephone or fax machine.
2. When your machine answers, immediately enter your three-digit Remote Access Code, followed by *.
3. Your Brother machine signals if it has received faxes:
   - One long beep - the machine received at least one fax
   - No beeps - the machine has not received a fax
4. When the machine gives two short beeps, enter a command.
   - The machine will hang up if you wait longer than 30 seconds to enter a command.
   - The machine will beep three times if you enter an invalid command.
5. When finished, press 9, and then press 0 to deactivate your machine.
6. Hang up.

This feature may not be available in some countries or supported by your local telephone company.

Related Information

- Remote Fax Retrieval
- Set a Remote Access Code

Remote Retrieval Commands

Related Models: MFC-J690DW/MFC-J890DW

Use the Remote Commands in this table to access fax commands and options when you are away from your Brother machine. When you call the machine and enter your remote access code (three digits followed by *), the system will sound two short beeps and you must enter a Remote Command (column 1), followed by one of the options (column 2) for that command.

Remote commands	Options	Operation details
95	**Change the Fax Forwarding, or Fax Storage settings**	
	1 OFF	You can select *Off* after you retrieve or erase all your messages.
	2 Fax Forwarding	One long beep means the change is accepted. If you hear three short beeps, you cannot make a change because something has not been set up (for example, a Fax Forwarding number has not been registered). You can register your Fax Forwarding number by entering 4. After you register the number, Fax Forwarding will work.
	4 Fax Forwarding number	
	6 Fax Storage	
96	**Retrieve a fax**	
	2 Retrieve all faxes	Enter the fax number of a remote fax machine to receive stored fax messages.
	3 Erase faxes from memory	If you hear one long beep, fax messages have been erased from memory.
97	**Check the receiving status**	
	1 Fax	Check whether your machine has received any faxes. If yes, you will hear one long beep. If not, you will hear three short beeps.
98	**Change the Receive Mode**	
	1 External TAD	One long beep means the change has been accepted.
	2 Fax/Tel	
	3 Fax Only	
90	**Exit**	Press **9 0** to stop remote retrieval. Wait for the long beep, then hang up.

Related Information

- Remote Fax Retrieval
- Change the Fax Forwarding Number
- Store Incoming Faxes in the Machine's Memory
- Forward Faxes Remotely
- Choose the Correct Receive Mode

Forward Faxes Remotely

Related Models: MFC-J690DW/MFC-J890DW

Call your Brother machine from any touch-tone telephone or fax machine to forward incoming faxes to another machine.

- You must turn on Fax Storage , or Fax Preview (MFC-J890DW) before you use this feature.

1. Dial your fax number.
2. When your machine answers, enter your Remote Access Code (three digits followed by *). If you hear one long beep, you have messages.
3. When you hear two short beeps, press 9 6 2.
4. Wait for the long beep, and then use the dial pad to enter the fax number (up to 20 digits) of the remote fax machine where you want your fax messages sent, followed by # #.

You cannot use * and # as dial numbers but you can press # to insert a pause in the fax number.

5. Hang up after you hear one long beep. Your Brother machine will forward any incoming faxes to the fax number you entered. The other fax machine will then print your fax messages.

Related Information

- Remote Fax Retrieval
- Store Incoming Faxes in the Machine's Memory
- Remote Retrieval Commands

Change the Fax Forwarding Number

Related Models: MFC-J690DW/MFC-J890DW

1. Dial your fax number.
2. When your machine answers, enter your Remote Access Code (three digits followed by *). If you hear one long beep, you have messages.
3. When you hear two short beeps, press 9 5 4.
4. Wait for the long beep, enter the new number (up to 20 digits) of the remote fax machine you want your fax messages forwarded to using the dial pad, then enter # #.

You cannot use * and # as dial numbers but you can press # to insert a pause in the fax number.

5. Press 9 0 to stop Remote Access when finished.
6. Hang up after you hear one long beep.

Related Information

- Remote Fax Retrieval
- Remote Retrieval Commands

Voice Operations and Fax Numbers

- Voice Operations
- Store Fax Numbers
- Set up Groups for Broadcasting

Voice Operations

- Send Tone Signals
- Pick up a Voice Call in Fax/Tel Receive Mode

Send Tone Signals

Related Models: MFC-J491DW/MFC-J690DW/MFC-J890DW

If you have a Pulse dialling service, but must send Tone signals (for example, for telephone banking), follow these steps. If you have a Touch Tone service, you will not need this feature to send tone signals.

This feature is not available in the New Zealand.

>> MFC-J491DW
>> MFC-J690DW/MFC-J890DW

MFC-J491DW

1. Press **Hook**.
2. Press # on the machine's control panel. Any digits dialled after this will send tone signals.

When you are finished with the call, the machine will return to the Pulse dialling service.

MFC-J690DW/MFC-J890DW

1. Press [Fax].

(MFC-J890DW)
If [Fax Preview] is set to [On], press [Fax] > [Sending Faxes].

2. Press [Hook].
3. Press # on the machine's control panel. Any digits dialled after this will send tone signals.

When you are finished with the call, the machine will return to the Pulse dialling service.

Related Information

- Voice Operations

Pick up a Voice Call in Fax/Tel Receive Mode

Related Models: MFC-J491DW/MFC-J690DW/MFC-J890DW

When the machine is in Fax/Tel mode, it will use the F/T Ring (pseudo/double-ringing) to alert you to pick up a voice call.

If you are at the machine, lift the external telephone's handset, and then press **Hook** button or `[Pickup]` button to answer.

If you are at an extension telephone, lift the handset during the F/T Ring and then press #51 (#91 for New Zealand) between the pseudo/double rings. If no one is on the line, or if someone wants to send you a fax, send the call back to the machine by pressing *51 (*91 for New Zealand).

Related Information

- Voice Operations

Store Fax Numbers

- Store Address Book Numbers
- Store Address Book Numbers from Outgoing Calls
- Store Address Book Numbers from Caller ID History
- Change or Delete Address Book Names or Numbers

Store Address Book Numbers

Related Models: MFC-J491DW/MFC-J690DW/MFC-J890DW

>> MFC-J491DW
>> MFC-J690DW/MFC-J890DW

MFC-J491DW

You can store up to 40 two-digit Speed Dial codes, and each code has a name.

1. Press (Address Book).
2. Press ▲ or ▼ to select `[Set Speed Dial]`. Press **OK**.
3. Press ▲ or ▼ to select the following:
   a. Select the two-digit Speed Dial code where you want to store the number. Press **OK**.
   b. Select `[Name]`. Press **OK**.
   c. Enter the name (up to 16 characters) using the dial pad. Press **OK**.
   d. Select `[Fax/Tel]`. Press **OK**.
   e. Enter the fax or telephone number (up to 20 digits). Press **OK**.

   - Press **Redial/Pause** to insert a pause between numbers. You can press **Redial/Pause** as many times as needed to increase the length of the pause.
   - Be sure to include the area code when entering a fax or telephone number. Depending on the country, the Caller ID names and history may not be displayed correctly if the area code is not registered with the fax or telephone number.

   f. Select `[OK]` and then press **OK**.

   To store another Speed Dial code, repeat these steps.
4. Press **Stop/Exit**.

MFC-J690DW/MFC-J890DW

1. Press `[Fax]` > `[Address Book]`.
2. Do the following steps:
   a. Press `[Edit]` > `[Add New Address]` > `[Name]`.
   b. Enter the name (up to 16 characters) using the touchscreen. Press `[OK]`.
   c. Press `[Address 1]`.
   d. Enter the first fax telephone number (up to 20 digits) using the touchscreen. Press `[OK]`.

   - Press `[Pause]` to insert a pause between numbers. You can press `[Pause]` as many times as needed to increase the length of the pause.
   - Be sure to include the area code when entering a fax or telephone number. Depending on the country, the Caller ID names and history may not be displayed correctly if the area code is not registered with the fax or telephone number.

   e. To store the second fax or telephone number, press `[Address 2]`. Enter the second fax or telephone number (up to 20 digits) using the touchscreen. Press `[OK]`.
   f. Press `[OK]` to confirm.

   To store another Address Book number, repeat these steps.
3. Press .

Related Information

- Store Fax Numbers
- Set up Groups for Broadcasting

Store Address Book Numbers from Outgoing Calls

Related Models: MFC-J491DW/MFC-J690DW/MFC-J890DW

You can store Address Book numbers from the Outgoing Call history.

>> MFC-J491DW
>> MFC-J690DW/MFC-J890DW

MFC-J491DW

1. Press (**FAX**).
2. Press ▲ or ▼ to select the following:
   a. Select [Call History]. Press **OK**.
   b. Select [Outgoing Call]. Press **OK**.
   c. Select the number you want to store. Press **OK**.
   d. Press ◀ to select [Edit].
   e. Select [Add to Address Book]. Press **OK**.

> To delete the number from the Outgoing Call history list, select [Delete] and then press **OK**. Press ▶ [Yes] to confirm.

   f. Select [Name]. Press **OK**.
   g. Enter the name (up to 16 characters) using the dial pad. Press **OK**.
   h. Confirm the fax or telephone number.
   i. Select [OK] and then press **OK**.
3. Press **Stop/Exit**.

MFC-J690DW/MFC-J890DW

1. Press [Fax] > [Call History] > [Outgoing Call].
2. Press ▲ or ▼ to display the number you want to store, and then press it.
3. Press [Edit] > [Add to Address Book] > [Name].

> To delete the number from the Outgoing Call history list, press [Edit] > [Delete]. Press [Yes] to confirm.

4. Enter the name (up to 16 characters) using the touchscreen. Press [OK].
5. To store the second fax or telephone number, press [Address 2]. Enter the second fax or telephone number (up to 20 digits) using the touchscreen. Press [OK].
6. Press [OK] to confirm the fax or telephone number you want to store.
7. Press .

Related Information

- Store Fax Numbers
- Enter Text on Your Brother Machine

Store Address Book Numbers from Caller ID History

Related Models: MFC-J491DW/MFC-J690DW/MFC-J890DW

If you have a Caller ID subscriber service from your telephone company, you can store Address Book numbers from incoming calls in the Caller ID history.

This feature is not available for Taiwan and some countries.

>> MFC-J491DW
>> MFC-J690DW/MFC-J890DW

MFC-J491DW

1. Press (**FAX**).
2. Press ▲ or ▼ to select the following:
   a. Select [Call History]. Press **OK**.
   b. Select [Caller ID History]. Press **OK**.
   c. Select the number you want to store. Press **OK**.
   d. Press ◀ to select [Edit].
   e. Select [Add to Address Book]. Press **OK**.

To delete the number from the Caller ID history list, select [Delete] and then press **OK**. Press ▶ [Yes] to confirm.

   f. Select [Name]. Press **OK**.
   g. Enter the name (up to 16 characters) using the dial pad. Press **OK**.
   h. Confirm the fax or telephone number.
   i. Select [OK] and then press **OK**.
3. Press **Stop/Exit**.

MFC-J690DW/MFC-J890DW

1. Press [Fax] > [Call History] > [Caller ID History].
2. Press ▲ or ▼ to display the name or number you want to store, and then press it.
3. Press [Edit] > [Add to Address Book] > [Name].

To delete the number from the Caller ID history list, press [Edit] > [Delete]. Press [Yes] to confirm.

4. Enter the name (up to 16 characters) using the touchscreen. Press [OK].
5. To store the second fax or telephone number, press [Address 2]. Enter the second fax or telephone number (up to 20 digits) using the touchscreen. Press [OK].
6. Press [OK] to confirm the fax or telephone number you want to store.
7. Press .

Related Information

- Store Fax Numbers
- Caller ID

- Enter Text on Your Brother Machine

Change or Delete Address Book Names or Numbers

Related Models: MFC-J491DW/MFC-J690DW/MFC-J890DW

>> MFC-J491DW
>> MFC-J690DW/MFC-J890DW

MFC-J491DW

1. Press (Address Book).
2. Do one of the following:
   - To change the number, press ▲ or ▼ to select the following:
     a. Select [Change]. Press **OK**.
     b. Select the Speed Dial name where you want to change the number. Press **OK**.

     Do the following steps:
     a. To change the name, press ▲ or ▼ to select [Name], and then press **OK**. Press ▲, ▼, ◀ or ▶ to re-enter the name (up to 16 characters) using the keyboard on the LCD and select [OK]. Press **OK**.
     b. To change the fax or telephone number, press ▲ or ▼ to select [Fax/Tel], and then press **OK**. Press ▲, ▼, ◀ or ▶ to re-enter the fax or telephone number (up to 20 digits) using the keyboard on the LCD and select [OK]. Press **OK**.

     Press ▲ or ▼ to select [OK] and then press **OK**.
   - To delete the number, press ▲ or ▼ to select [Delete]. Press **OK**.

     Do the following steps:
     a. Press ▲ or ▼ to select the Speed Dial name where you want to delete the number.
     b. Press ◀ or ▶ to select the check box labelled with the Speed Dial name. Press **OK**.
3. Press **Stop/Exit**.

MFC-J690DW/MFC-J890DW

1. Press [Fax] > [Address Book] > [Edit].
2. Do one of the following:
   - Press [Change] to edit the names or fax or telephone numbers.

     Press ▲ or ▼ to display the number you want to change, and then press it.
     - To change the name, press [Name]. Enter the new name (up to 16 characters) using the touchscreen. Press [OK].
     - To change the first fax or telephone number, press [Address 1]. Enter the new fax or telephone number (up to 20 digits) using the touchscreen. Press [OK].
     - To change the second fax or telephone number, press [Address 2]. Enter the new fax or telephone number (up to 20 digits) using the touchscreen. Press [OK].

     Press [OK] to finish.

To change a character, press ◀ or ▶ to position the cursor to highlight the character you want to change, and then press . Enter the new character.

   - To delete numbers, press ▲ or ▼ to display [Delete], and then press it.
     - Select the fax or telephone numbers you want to delete by pressing them to display check marks, and then press [OK].

3. Press .

Related Information

- Store Fax Numbers

Set up Groups for Broadcasting

Related Models: MFC-J491DW/MFC-J690DW/MFC-J890DW

A Group, which can be stored in the Address Book, allows you to send the same fax message to many fax numbers.

>> MFC-J491DW
>> MFC-J690DW/MFC-J890DW

MFC-J491DW

First, you must store each fax number in the Address Book. Then you can include them as numbers in the Group. Each Group uses up a Speed Dial number. You can store up to six Groups, or you can assign up to 39 numbers to a large Group.

1. Press (Address Book).
2. Press ▲ or ▼ to select the following:
   a. Select `[Setup Groups]`. Press **OK**.
   b. Select the two-digit Speed Dial number you want to assign to the Group. Press **OK**.
   c. Select `[Name]` and press **OK**.
   d. Enter the new Group's name (up to 16 characters) using the dial pad. Press **OK**.
   e. To add numbers to the Group, repeat the following steps:
      i. Select `[Add/Delete]`. Press **OK**.
      ii. Select `[Alphabetical Order]` or `[Numerical Order]`. Press **OK**.
      iii. Press ▲ or ▼ to select a number from the list.
      iv. Press ◀ or ▶ to select the check box labelled with the Speed Dial number. Press **OK**.
3. Select `[OK]` and then press **OK**.
4. Press **Stop/Exit**.

MFC-J690DW/MFC-J890DW

First, you must store each fax number in the Address Book. Then you can include them as numbers in the Group. Each Group uses up an Address Book number. You can store up to six Groups, or you can assign up to 198 numbers to a large Group.

1. Press `[Fax]` > `[Address Book]`.
2. Do the following steps:
   a. Press `[Edit]` > `[Setup Groups]` > `[Name]`.
   b. Enter the Group name (up to 16 characters) using the touchscreen. Press `[OK]`.
   c. Press `[Add/Delete]`.
   d. Add Address Book numbers to the Group by pressing them to display a checkmark. Press `[OK]`.
   e. Read and confirm the displayed list of names and numbers you have selected, and then press `[OK]` to save your Group.

   To store another Group for broadcasting, repeat these steps.
3. Press .

Related Information

- Voice Operations and Fax Numbers
- Change a Broadcasting Group Name
- Delete a Broadcasting Group
- Add or Delete a Broadcasting Group Member
- Send the Same Fax to More than One Recipient (Broadcasting)
- Store Address Book Numbers

Change a Broadcasting Group Name

Related Models: MFC-J491DW/MFC-J690DW/MFC-J890DW

>> MFC-J491DW
>> MFC-J690DW/MFC-J890DW

MFC-J491DW

1. Press (Address Book).
2. Press ▲ or ▼ to select the following:
   a. Select [Change]. Press **OK**.
   b. Select the Group to change. Press **OK**.
   c. Select [Name] and then press **OK**. Enter the new Group name (up to 16 characters) using the dial pad and then press **OK**.

To change a character in the Group name, press ▲, ▼, ◄ or ► to select < or >. Press **OK** several times to move the cursor under the incorrect character. Then press ▲, ▼, ◄ or ► to select ⌫, and press **OK**. Re-enter the correct letter.

3. Select [OK] and then press **OK**.
4. Press **Stop/Exit**.

MFC-J690DW/MFC-J890DW

1. Press [Fax] > [Address Book] > [Edit] > [Change].
2. Press ▲ or ▼ to display the Group you want to change, and then press it.
3. Press [Name].
4. Enter the new Group name (up to 16 characters) using the touchscreen. Press [OK].

To change a character, press ◄ or ► to position the cursor to highlight the incorrect character, and then press ⌫.

Enter the new character.

5. Press [OK].
6. Press .

Related Information

- Set up Groups for Broadcasting
- Enter Text on Your Brother Machine

Delete a Broadcasting Group

Related Models: MFC-J491DW/MFC-J690DW/MFC-J890DW

>> MFC-J491DW
>> MFC-J690DW/MFC-J890DW

MFC-J491DW

1. Press (Address Book).
2. Press ▲ or ▼ to select [Delete]. Press **OK**.
3. Do the following steps:
   a. Press ▲ or ▼ to select the Group you want to delete.
   b. Press ◀ or ▶ to select the check box labelled with the Group name. Press **OK**.
4. Press **Stop/Exit**.

MFC-J690DW/MFC-J890DW

1. Press [Fax] > [Address Book] > [Edit] > [Delete].
2. Press ▲ or ▼ to display the Group you want to delete, and then press it.
3. Press [OK].
4. Press .

Related Information

- Set up Groups for Broadcasting

Add or Delete a Broadcasting Group Member

Related Models: MFC-J491DW/MFC-J690DW/MFC-J890DW

>> MFC-J491DW
>> MFC-J690DW/MFC-J890DW

MFC-J491DW

1. Press (Address Book).
2. Press ▲ or ▼ to select the following:
   a. Select [Change]. Press **OK**.
   b. Select the Group you want to change. Press **OK**.
   c. Select [Add/Delete]. Press **OK**.
   d. Select [Alphabetical Order] or [Numerical Order]. Press **OK**.
3. Do one of the following:
   - To add a member using his Speed Dial number, press ▲ or ▼ to select the Speed Dial number, and then press ◀ or ▶ to select the check box labelled with the Group name.
   - To delete a member using his Speed Dial number, press ▲ or ▼ to select the Speed Dial number, and then press ◀ or ▶ to remove the check box labelled with the Group name.

   Repeat this step until you have added or deleted all the fax numbers you want.
4. Press **OK**.
5. Select [OK] and then press **OK**.
6. Press **Stop/Exit**.

MFC-J690DW/MFC-J890DW

1. Press [Fax] > [Address Book] > [Edit] > [Change].
2. Press ▲ or ▼ to display the Group you want to change, and then press it.
3. Press ▲ or ▼ to display [Add/Delete], and then press it.
4. Press ▲ or ▼ to display the number you want to add or delete.
5. Do the following for each number you want to change:
   - To add a number to the Group, press the check box of the number to add a check mark.
   - To delete a number from the Group, press the check box of the number to remove the check mark.
6. Press [OK].
7. Press [OK].
8. Press .

Related Information

- Set up Groups for Broadcasting

Telephone Services and External Devices

- Distinctive Ring
- Caller ID
- Set the Telephone Line Type
- FaxAbility
- Voice Over Internet Protocol (VoIP/Telephone Line Interference)
- External TAD (Telephone Answering Device)
- External and Extension Telephones

Distinctive Ring

Related Models: MFC-J491DW/MFC-J690DW/MFC-J890DW

This feature is available only for some countries.

For Australia

Distinctive Ring is a function of your Brother machine that allows a person with one line to receive fax and voice calls through two different phone numbers on that one line. Brother uses the term “Distinctive Ring”, but telephone companies market the service under a variety of names. This service establishes a second telephone number on the same line as your existing telephone number, and each number has its own ring pattern. Typically, the original number rings with the standard ring pattern and is used for receiving voice calls, and the second number rings with a different ring pattern and is used for receiving faxes. Only one call can be answered (or made) at any one time and while this call is in progress, incoming calls to either number will be presented with a busy tone.

- Contact your Telephone Service Provider to determine Distinctive Ring availability and any other related details.
- After you have set the Distinctive Ring feature to On, the receive mode is set to `[Manual]` automatically. Your Distinctive Ring Number does not allow Voice calls - only Faxes. You can not change the receive mode from `[Manual]` mode while the Distinctive Ring is set to on.

How does your telephone company’s ‘Distinctive Ring’ service work?

Using “Distinctive Ring” service of your telephone company is the most efficient way to receive both fax and telephone calls on the same line. When the voice call comes in, all phones (extension and external) and the fax machine will ring to alert you to pick it up. If a fax call comes in, the fax machine will answer automatically without ringing, whereas the extension and external phones will ring twice with a Distinctive Ring pattern. It is also a more efficient way of operating a Fax machine with an extension phone as you do not have to use the remote activation codes. It gives you two independent numbers without the higher cost of a second line.

Flowchart Sequence of Incoming call

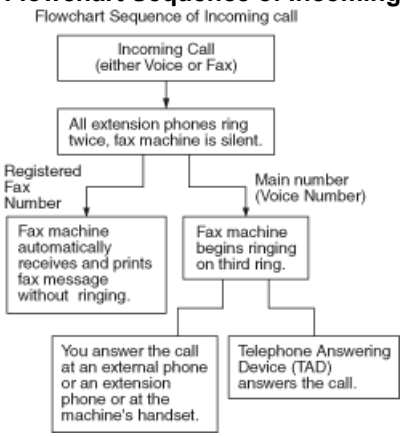

What does Brother’s ‘Distinctive Ring’ do?

The Brother machine has a Distinctive Ring feature that allows you to use your machine to take full advantage of the telephone company’s Distinctive Ring service. The new telephone number on your line can just receive faxes.

For Singapore and Hong Kong

This machine feature lets you use the Distinctive Ring subscriber service offered by some telephone companies, which allows you to have several telephone numbers on one phone line. Each phone number has its own Distinctive Ring pattern, so you will know which phone number is ringing. This is one way you can have a separate phone number for your machine.

Your machine has a Distinctive Ring function, allowing you to dedicate one phone number just for receiving faxes. You will need to set Distinctive Ring to On.

- You can switch it off temporarily, then turn it back on. When you get a new fax number, make sure you reset this function.
- The machine will answer only calls to the Distinctive Ring number.

Related Information

- Telephone Services and External Devices
- Turn on Distinctive Ring
- Turn off Distinctive Ring
- Settings Screen Overview
- Choose the Correct Receive Mode

Turn on Distinctive Ring

Related Models: MFC-J491DW/MFC-J690DW/MFC-J890DW

This feature is available only for some countries.

For Australia

After you set the Distinctive Ring feature to [On], the receive mode is automatically set to [Manual]. Your Distinctive Ring Number does not allow Voice calls - only Faxes. You cannot change the receive mode to another mode while the Distinctive Ring is set to on.

For Singapore and Hong Kong

After you set the Distinctive Ring feature to [On], the receive mode is automatically set to [Manual]. Unless you have a TAD or Voice Mail set up on the Distinctive Ring number, Manual mode means you must answer all the calls yourself. You cannot change the receive mode to another mode while the Distinctive Ring is set to on.

When Distinctive Ring is on, the touchscreen will show [D/R] as the Receive Mode.

>> MFC-J491DW
>> MFC-J690DW/MFC-J890DW

MFC-J491DW

1. Press **Settings**.
2. Press ▲ or ▼ to select the following:
   a. Select [Fax]. Press **OK**.
   b. Select [Miscellaneous]. Press **OK**.
   c. Select [Distinctive]. Press **OK**.
   d. Select [On]. Press **OK**.
3. Press **Stop/Exit**.

   Distinctive Ring is now set to [On].

MFC-J690DW/MFC-J890DW

1. Press [Settings] > [All Settings] > [Fax] > [Miscellaneous] > [Distinctive].
2. Press [On].
3. Press .

   Distinctive Ring is now set to [On].

Related Information

- Distinctive Ring

Turn off Distinctive Ring

Related Models: MFC-J491DW/MFC-J690DW/MFC-J890DW

This feature is available only for some countries.

>> MFC-J491DW
>> MFC-J690DW/MFC-J890DW

MFC-J491DW

1. Press **Settings**.
2. Press ▲ or ▼ to select the following:
   a. Select `[Fax]`. Press **OK**.
   b. Select `[Miscellaneous]`. Press **OK**.
   c. Select `[Distinctive]`. Press **OK**.
   d. Select `[Off]`. Press **OK**.
3. Press **Stop/Exit**.

When you turn off Distinctive Ring, the machine will stay in `[Manual]` mode. You must set the Receive Mode again.

MFC-J690DW/MFC-J890DW

1. Press `[Settings]` > `[All Settings]` > `[Fax]` > `[Miscellaneous]` > `[Distinctive]`.
2. Press `[Off]`.
3. Press .

When you turn off Distinctive Ring, the machine will stay in `[Manual]` mode. You must set the Receive Mode again.

Related Information

- Distinctive Ring
- Error and Maintenance Messages

Caller ID

Related Models: MFC-J491DW/MFC-J690DW/MFC-J890DW

This feature is not available for Taiwan and some countries.

For Australia and New Zealand

Caller ID is a telephone service that allows the subscriber to see a display of the caller's phone number or name as the telephone rings. It is a fast way to screen your calls. You can respond quickly to calls you missed, because Caller IDs are received and stored in your machine memory.

To get the Caller ID Service: apply for the Caller ID service at your local telephone company, if available.

Advantages of Caller ID

For Business

All businesses profit from a quicker response to customer calls. Businesses that provide mail order services, money-lending services or provide confidential information, can protect themselves from false orders or acceptance of false identification.

At Home

Residential customers can protect themselves from unwanted calls.

How Does the Caller ID Work?

The Caller ID appears on the display when your telephone rings.

As your telephone rings, the display shows you the caller's phone number or name if the name has been stored in the Address Book. Once you answer the call, the caller's ID disappears.

- If `[ID Unknown]` appears on the display, it means that the call came from outside your caller ID service area or a public phone. (Depends on network function.)
- If `[ID Withheld]` appears on the display, it means the caller intentionally blocked the transmission of his/her ID. (Depends on network function.)

The Caller ID is Stored in Your Machine Memory

The machine can store a maximum of the last 30 incoming caller IDs in the memory, along with the time and date of reception. The 31st call will cause the oldest ID to be erased.

The Caller ID information stored in the memory can be used for the following:

- **Printing the Caller ID List.**

  You can review calls you received by checking the Caller IDs in memory. This report will list the Date, Time, Phone Number (Caller ID) name, and type of Call (Comment) if available.

For Singapore and Hong Kong

The Caller ID feature of this machine lets you use the Caller ID subscriber service offered by many local phone companies. Call your telephone company for details. This service provides you, by means of the screen display, the telephone number (or name) of your caller as the line rings.

After a few rings, the screen displays the telephone number of your caller (or name, if available). Once you answer the call, the Caller ID information disappears from the screen, but the call information remains stored in the Caller ID memory.

- The `[ID Unknown]` message means the call originated outside your Caller ID service area.
- The `[ID Withheld]` message means the caller has intentionally blocked transmission of Caller ID information.

- You can print a list of Caller ID information received by your machine.
- Caller ID service varies with different carriers. Call your local phone company to determine the kind of service available in your area.

Related Information

- Telephone Services and External Devices
- Store Address Book Numbers from Caller ID History
- Print a Report
- Error and Maintenance Messages

Set the Telephone Line Type

Related Models: MFC-J491DW/MFC-J690DW/MFC-J890DW

This feature is available only in South Africa.

If you are connecting the machine to a line that features PBX or ISDN to send and receive faxes, you must select a Telephone Line Type that matches your line's features.

>> MFC-J491DW
>> MFC-J690DW/MFC-J890DW

MFC-J491DW

1. Press **Settings**.
2. Press ▲ or ▼ to select the following:
   a. Select `[Initial Setup]`. Press **OK**.
   b. Select `[Phone Line Set]`. Press **OK**.
   c. Select `[Normal]`, `[PBX]` or `[ISDN]`. Press **OK**.
3. Press **Stop/Exit**.

MFC-J690DW/MFC-J890DW

1. Press `[Settings]` > `[All Settings]` > `[Initial Setup]` > `[Phone Line Set]`.
2. Press `[Normal]`, `[PBX]`, or `[ISDN]`.
3. If you selected `[PBX]`, do the following steps:
   a. Press `[On]` or `[Always]`.

- If you select `[On]`, the machine dials a prefix number before the fax number only when `[R]` is pressed.
- If you select `[Always]`, the machine always dials a prefix number before the fax number.

   b. Press `[Dial Prefix]`.
   c. Enter the prefix number using the touchscreen, and then press `[OK]`.

Use the numbers 0 to 9, #, l and !. You cannot use ! with any other numbers or characters.

4. Press .

Related Information

- Telephone Services and External Devices
- PBX and TRANSFER
- Telephone and Fax Problems

PBX and TRANSFER

Related Models: MFC-J491DW/MFC-J690DW/MFC-J890DW

This feature is available only in South Africa.

The machine's [Phone Line Set] default setting is [Normal], which lets the machine connect to a standard Public Switched Telephone Network (PSTN) line. However, many offices use a central telephone system or Private Branch Exchange (PBX). Your machine can be connected to most types of PBX. The machine's recall feature supports timed break recall only (TBR). TBR will work with most PBX systems allowing you to gain access to an outside line, or transfer calls to another extension. Press [R] or the **Hook** button to use this feature.

Program a press of the [R] button (or the **Hook** button) as part of a number stored in the Address Book. When programming the Address Book number, press [R] (or the **Hook** button) first (the LCD displays '!'), then enter the telephone number. This avoids having to press [R] (or the **Hook** button) each time before you dial from the Address Book. However, your Telephone Line Type must be set to PBX on the machine for you to use this feature.

Related Information

- Set the Telephone Line Type

FaxAbility

Related Models: MFC-J491DW/MFC-J690DW/MFC-J890DW

This feature is available only in New Zealand.

FaxAbility is a service offered by Telecom that allows you to have an additional number on one phone line, with its own distinctive ring pattern. This way, when you get an incoming call, you can identify the number being called by its ring.

How Will the Fax Machine Treat All Other Numbers?

FaxAbility mode ensures that the machine will answer calls to the FaxAbility (secondary) number. When a call comes in to your main number, all the phones will ring. You can set an external answering device (TAD) to answer calls on the other number(s). (See the chart bellow.)

What is the Advantage of Using the FaxAbility Function?

Using FaxAbility is the most efficient way to receive both fax and telephone calls on the same line. It is much easier for your callers who dial manually. The fax machine will answer with receiving tones so they will not have to press an activation code. And the people who call to talk on your main number will not have to talk to your fax machine. Basically, it gives you two independent numbers without the higher cost of a second line.

How Does FaxAbility Work?

For example, Your telephone number will have the standard ring pattern of long, long tone, while the new number will have a ring pattern of long, silence, long. When FaxAbility is On, you will not hear the first ring of all incoming calls on the fax machine. Extension phones will ring as usual. If the fax machine recognises the ring pattern, all ringing will stop and the fax machine will answer and automatically receive the fax message. Otherwise, you will hear the extension phones and the fax machine continue to ring. The fax machine always listens to the ring pattern before it answers, so do not pick up the phone during that time. You will quickly learn to recognise the ring pattern for faxes, so you will not be tempted to answer that number. Either you or a telephone answering device can answer the main number(s).

Flowchart Sequence of Incoming call

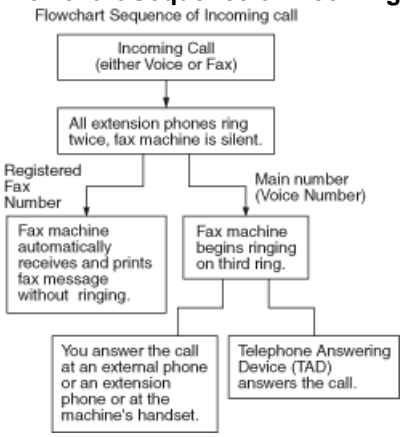

After you have set the FaxAbility feature to on, the receive mode is set to `[Manual]` automatically. Unless you have a TAD or Voice Mail set up on the FaxAbility number, Manual mode means you must answer all the call yourself. You can not change the receive mode to the other mode while the FaxAbility is set to on. When FaxAbility is on, the LCD will show `[D/R]` as the Receive Mode.

Related Information

- Telephone Services and External Devices
- Turn FaxAbility Off or On

Turn FaxAbility Off or On

Related Models: MFC-J491DW/MFC-J690DW/MFC-J890DW

This feature is available only in New Zealand.

The FaxAbility function is designed to accommodate the FaxAbility service provided by Telecom.

Call Waiting beeps caused by incoming calls on your main number can affect fax transmissions. If you have FaxAbility Service but don't have Call Waiting, you need do nothing at this stage. If you do have Call Waiting as well as FaxAbility, set the Call Waiting menu option to On.

>> MFC-J491DW
>> MFC-J690DW/MFC-J890DW

MFC-J491DW

1. Press **Settings**.
2. Press ▲ or ▼ to select the following:
   a. Select `[Fax]`. Press **OK**.
   b. Select `[Miscellaneous]`. Press **OK**.
   c. Select `[FaxAbility]`. Press **OK**.
   d. Select `[On]` (or `[Off]`) to set FaxAbility. Press **OK**.
      If you have FaxAbility service, select `[On]`.
   e. Select `[Call Waiting]`. Press **OK**.
   f. Select `[On]` (or `[Off]`) to set Call Waiting. Press **OK**.
      If you have Call Waiting service, select `[On]` to avoid the trouble caused by Call Waiting.
3. Press **Stop/Exit**.

MFC-J690DW/MFC-J890DW

1. Press `[Settings]` > `[All Settings]` > `[Fax]` > `[Miscellaneous]` > `[FaxAbility]`.
2. Press `[On]` (or `[Off]`) to set FaxAbility.
   If you have FaxAbility service, press `[On]`.
3. Press `[Call Waiting]`.
4. Press `[On]` to set Call Waiting.
   If you have Call Waiting service, press `[On]` to avoid the trouble caused by Call Waiting.
5. Press .

Related Information

- FaxAbility
- Error and Maintenance Messages

Voice Over Internet Protocol (VoIP/Telephone Line Interference)

Related Models: MFC-J491DW/MFC-J690DW/MFC-J890DW

VoIP is a type of phone system that uses an Internet connection instead of a traditional telephone line. Telephone providers frequently bundle VoIP together with Internet and cable services.

Your machine may not work with some VoIP systems. If you want to use your machine to send and receive faxes on a VoIP system, make sure one end of your telephone cord is connected to the socket labelled LINE on your machine. The other end of the telephone cord may be connected to a modem, phone adapter, splitter, or other such device.

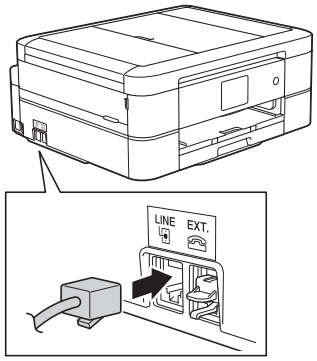

If you have questions about how to connect your machine to the VoIP system, please contact your VoIP provider.

After you have connected your machine to the VoIP system, check for a dial tone. Lift the external telephone's handset and listen for a dial tone. If there is no dial tone, please contact your VoIP provider.

If you are having problems sending or receiving faxes over a VoIP system, we recommend changing the machine's modem speed to the `[Basic(for VoIP)]` setting.

- VoIP (Voice over IP) is a type of phone system that uses an Internet connection, rather than a traditional phone line.
- Brother does not recommend the use of a VoIP line. VoIP limitations in general can cause some functions of the fax machine not to work correctly.

Related Information

- Telephone Services and External Devices
- Telephone Line Interference/VoIP

External TAD (Telephone Answering Device)

Related Models: MFC-J491DW/MFC-J690DW/MFC-J890DW

You can connect an external Telephone Answering Device (TAD) to the same line as your machine. When the TAD answers a call, your machine will “listen” for the CNG (fax calling) tones sent by a sending fax machine. If it hears them it will take over the call and receive the fax. If it does not hear them, it will let your TAD take a voice message and the LCD will show `[Telephone]`.

The external TAD must answer within two rings (we recommend setting it to two rings). This is because your machine cannot hear the CNG tones until the external TAD has picked up the call. The sending machine will send CNG tones for only eight to ten seconds longer. We do not recommend using the toll saver feature on your external TAD if it needs more than four rings to activate it.

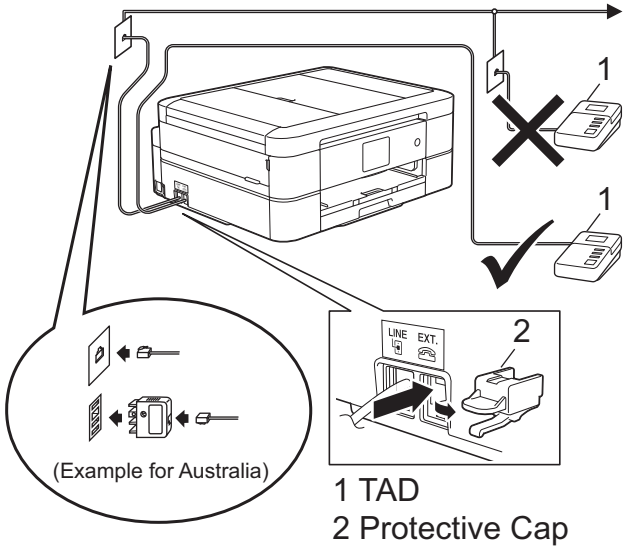

1 TAD
2 Protective Cap

IMPORTANT

DO NOT connect a TAD elsewhere on the same telephone line.

If you have problems receiving faxes, reduce the Ring Delay setting on your external TAD.

Related Information

- Telephone Services and External Devices
- Connect an External TAD
- Record an Outgoing Message (OGM) on the External TAD
- Multi-line Connections (PABX)
- Telephone and Fax Problems

Connect an External TAD

Related Models: MFC-J491DW/MFC-J690DW/MFC-J890DW

1. Set your external TAD to the minimum number of rings allowed. For more information, contact your telephone provider. (The machine's Ring Delay setting does not apply.)
2. Record the outgoing message on your external TAD.
3. Set the TAD to answer calls.
4. Set the Receive Mode on your machine to `[External TAD]`.

Related Information

- External TAD (Telephone Answering Device)
- Receive Modes Overview
- Choose the Correct Receive Mode
- Telephone and Fax Problems

Record an Outgoing Message (OGM) on the External TAD

Related Models: MFC-J491DW/MFC-J690DW/MFC-J890DW

1. Record five seconds of silence at the beginning of your message. This allows your machine time to listen for fax tones.

   We recommend beginning your OGM with an initial five second silence because the machine cannot hear fax tones over a loud voice. You may try leaving out this pause, but if your machine has trouble receiving faxes, then you should re-record the OGM to include it.

2. Limit your speaking to 20 seconds.
3. End your 20-second message by giving your Remote Activation Code for people sending manual faxes. For example: “After the beep, leave a message or press *51 and Start to send a fax.”

Related Information

- External TAD (Telephone Answering Device)

Multi-line Connections (PABX)

Related Models: MFC-J491DW/MFC-J690DW/MFC-J890DW

Most offices use a central telephone system.

Brother recommends that all our machines be connected to a discreet (dedicated) line. Although a particular PABX may appear to work with a particular model of fax machine, we cannot guarantee that the unit will operate correctly.

While it is often relatively simple to connect a fax machine to a PABX, (Private Automatic Branch Exchange), we suggest that you contact the company that installed your telephone system and ask them to connect the fax machine for you.

Brother does not recommend the use of a PABX line. PABX limitations in general can cause some functions of the fax machine not to work correctly.

Related Information

- External TAD (Telephone Answering Device)

External and Extension Telephones

- Connect an External or Extension Telephone
- Operation from External and Extension Telephones
- Use a Cordless External Telephone
- Use the Remote Codes

Connect an External or Extension Telephone

Related Models: MFC-J491DW/MFC-J690DW/MFC-J890DW

You can connect a separate telephone to your machine as shown in the diagram below.

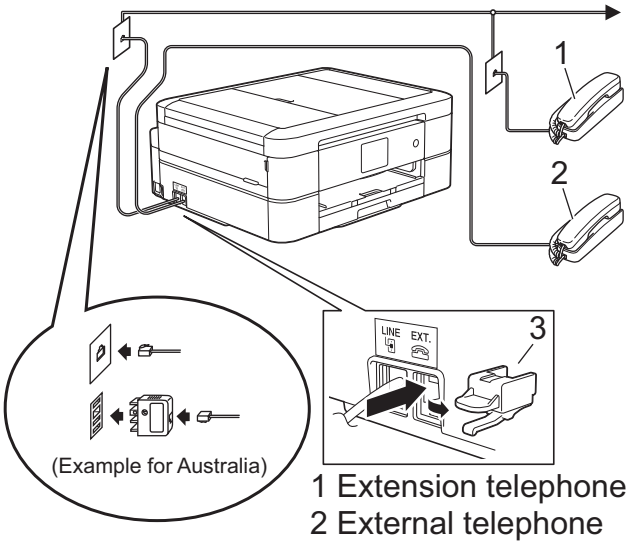

1 Extension telephone
2 External telephone
3 Protective Cap

Related Information

- External and Extension Telephones

Operation from External and Extension Telephones

Related Models: MFC-J491DW/MFC-J690DW/MFC-J890DW

If you answer a fax call at an extension or an external telephone, you can make your machine take the call by using the Remote Activation Code. When you press the Remote Activation Code ***51** (***91** for New Zealand), the machine starts to receive the fax.

If the machine answers a voice call and pseudo/double-rings for you to take over, you can take the call at an extension telephone by pressing the Remote Deactivation Code **#51** (**#91** for New Zealand).

If you answer a call and no one is on the line:

You should assume that you're receiving a manual fax.

Press ***51** (***91** for New Zealand) and wait for the chirp or until the LCD shows `[Receiving]`, and then hang up.

You can also use the Fax Detect feature to make your machine automatically take the call.

Related Information

- External and Extension Telephones
- Set the Number of Rings Before the Machine Answers (Ring Delay)
- Set Fax Detect
- Set a Remote Access Code
- Set the F/T Ring Time (Pseudo/Double-ring)

Use a Cordless External Telephone

Related Models: MFC-J491DW/MFC-J690DW/MFC-J890DW

Once the base unit of the cordless telephone has been connected to the same telephone line as the machine, you can answer calls on the cordless handset during the Ring Delay.

Related Information

- External and Extension Telephones

Use the Remote Codes

Related Models: MFC-J491DW/MFC-J690DW/MFC-J890DW

Remote Activation Code

If you answer a fax call on an extension or external telephone, you can tell your machine to receive it by pressing the Remote Activation Code ***51** (***91** for New Zealand). Wait for the chirping sounds then replace the handset.

If you answer a fax call at the external telephone, you can make the machine receive the fax by pressing the Start button and then selecting the option to receive.

Remote Deactivation Code

If you receive a voice call and the machine is in F/T mode, it will start to sound the F/T ring (pseudo/double-ring) after the initial Ring Delay. If you pick up the call on an extension telephone you can turn the F/T ring off by pressing **#51** (**#91** for New Zealand) (make sure you press this between the rings).

If the machine answers a voice call and pseudo/double-rings for you to take over, you can take the call at the external telephone by pressing `[Pickup]` or by pressing **Hook**.

Related Information

- External and Extension Telephones
- Change the Remote Codes
- Set a Remote Access Code
- Set Fax Detect

Change the Remote Codes

Related Models: MFC-J491DW/MFC-J690DW/MFC-J890DW

The preset Remote Activation Code is ***51** (***91** for New Zealand). The preset Remote Deactivation Code is **#51** (**#91** for New Zealand). If you are always disconnected when accessing your External TAD remotely, try changing the three-digit remote codes using the numbers 0-9, *, #.

>> MFC-J491DW
>> MFC-J690DW/MFC-J890DW

MFC-J491DW

1. Press **Settings**.
2. Press ▲ or ▼ to select the following:
   a. Select `[Fax]`. Press **OK**.
   b. Select `[Setup Receive]`. Press **OK**.
   c. Select `[Remote Codes]`. Press **OK**.
   d. Select `[Remote Codes]` again. Press **OK**.
   e. Select `[On]`. Press **OK**.
3. Do one of the following:
   - To change the Remote Activation Code, press ▲ or ▼ to select `[Act.Code]` and then press **OK**. Enter the new code. Press **OK**.
   - To change the Remote Deactivation Code, press ▲ or ▼ to select `[Deact.Code]` and then press **OK**. Enter the new code. Press **OK**.
4. Press **Stop/Exit**.

MFC-J690DW/MFC-J890DW

1. Press `[Settings]` > `[All Settings]` > `[Fax]` > `[Setup Receive]` > `[Remote Codes]`.
2. Do one of the following:
   - To change the Remote Activation Code, press `[Act.Code]`. Enter the new code, and then press `[OK]`.
   - To change the Remote Deactivation Code, press `[Deact.Code]`. Enter the new code, and then press `[OK]`.
   - If you do not want to change the Codes, go to the next step.
   - To turn the Remote Codes `[Off]` (or `[On]`), press `[Remote Codes]`. Press `[Off]` (or `[On]`).
3. Press .

Related Information

- Use the Remote Codes

Fax Reports

- Set the Transmission Verification Report's Style
- Set the Fax Journal's Interval Period
- Print Reports

Set the Transmission Verification Report's Style

Related Models: MFC-J491DW/MFC-J690DW/MFC-J890DW

You can use the Transmission Verification Report as proof that you sent a fax. This report lists the receiving party's name or fax number, the time and date of transmission, duration of transmission, number of pages sent, and whether or not the transmission was successful.

There are several settings available for the Transmission Verification Report:

Option	Description
On	Prints a report after every fax you send.
On (+Image)	Prints a report after every fax you send. A portion of the fax's first page appears on the report.
Error only	Prints a report if your fax is unsuccessful due to a transmission error.
Error only (+Image)	Prints a report if your fax is unsuccessful due to a transmission error. A portion of the fax's first page appears on the report.
Off	The report will not be printed.

>> MFC-J491DW
>> MFC-J690DW/MFC-J890DW

MFC-J491DW

1. Press **Settings**.
2. Press ▲ or ▼ to select the following:
   a. Select [Fax]. Press **OK**.
   b. Select [Report Setting]. Press **OK**.
   c. Select [XMIT Report]. Press **OK**.
   d. Select the option you want. Press **OK**.
      If you select [On (+Image)] or [Error only (+Image)], the image will not appear on the Transmission Verification Report if Real Time Transmission is set to [On]. The image will not appear on the report when you send a colour fax.
3. Press **Stop/Exit**.
   If the transmission is successful, [OK] appears next to [RESULT] on the Transmission Verification Report. If the transmission is not successful, [ERROR] appears next to [RESULT].

MFC-J690DW/MFC-J890DW

1. Press [Settings] > [All Settings] > [Fax] > [Report Setting] > [XMIT Report].
2. Press the option you want.
   If you select [On (+Image)] or [Error only (+Image)], the image will not appear on the Transmission Verification Report if Real Time Transmission is set to [On]. The image will not appear on the report when you send a colour fax.
3. Press .
   If the transmission is successful, [OK] appears next to [RESULT] on the Transmission Verification Report. If the transmission is not successful, [ERROR] appears next to [RESULT].

Related Information

- Fax Reports

Set the Fax Journal's Interval Period

Related Models: MFC-J491DW/MFC-J690DW/MFC-J890DW

You can set the machine to print a Fax Journal at specific intervals (every 50 faxes, 6, 12 or 24 hours, 2 or 7 days).

(MFC-J491DW/MFC-J690DW)

When using the Auto Power Off feature and the machine powers off before the chosen Interval Period, the machine will print a Fax Journal report, and then erase all fax jobs from the Journal's memory.

>> MFC-J491DW
>> MFC-J690DW/MFC-J890DW

MFC-J491DW

1. Press **Settings**.
2. Press ▲ or ▼ to select the following:
   a. Select `[Fax]`. Press **OK**.
   b. Select `[Report Setting]`. Press **OK**.
   c. Select `[Journal Period]`. Press **OK**.
   d. Select `[Journal Period]` once again. Press **OK**.
3. Press ▲ or ▼ to select an interval. Press **OK**.
   - 6, 12, 24 hours, 2 or 7 days

     The machine will print the report at the selected interval and then erase all fax jobs from the Journal's memory. If the memory becomes full with 200 jobs before the time you selected has passed, the machine will print the Journal early and then erase all fax jobs from the memory. If you want an extra report before it is due to print, you can print it without erasing the jobs.
   - Every 50 Faxes

     The machine will print the Journal when the machine has stored 50 fax jobs.
4. If you selected 6, 12, 24 hours, 2 or 7 days, press ▲ or ▼ to select `[Time]` and then press **OK**. Enter the time of day using the dial pad. Press **OK**.

Enter the time in the same time format as your machine's date and time setting. (12-hour format or 24-hour format)

5. If you selected `[Every 7 Days]`, press ▲ or ▼ to select `[Day]` and then press **OK**. Press ▲ or ▼ to select the first day of the seven-day countdown. Press **OK**.
6. Press **Stop/Exit**.

MFC-J690DW/MFC-J890DW

1. Press `[Settings]` > `[All Settings]` > `[Fax]` > `[Report Setting]` > `[Journal Period]`.
2. Press `[Journal Period]`.
3. Press ▲ or ▼ to select an interval.
   - 6, 12, 24 hours, 2 or 7 days

     The machine will print the report at the selected interval and then erase all fax jobs from the Journal's memory. If the memory becomes full with 200 jobs before the time you selected has passed, the machine will print the Journal early and then erase all fax jobs from the memory. If you want an extra report before it is due to print, you can print it without erasing the jobs.
   - Every 50 Faxes

The machine will print the Journal when the machine has stored 50 fax jobs.

4. If you selected 6, 12, 24 hours, 2 or 7 days, press [Time] and enter the time of day using the touchscreen. Press [OK].
5. If you selected [Every 7 Days], press [Day]. Press ▲ or ▼ to display the [Every Monday], [Every Tuesday], [Every Wednesday], [Every Thursday], [Every Friday], [Every Saturday] or [Every Sunday] option, and then press the first day of the seven-day countdown.
6. Press .

Related Information

- Fax Reports
- Set the Machine to Power Off Automatically

PC-FAX

- PC-FAX for Windows
- PC-FAX for Mac

PC-FAX for Windows

- PC-FAX Overview (Windows)
- Send a Fax Using PC-FAX (Windows)
- Receive Faxes on Your Computer (Windows)

PC-FAX Overview (Windows)

Reduce paper consumption and save time by using Brother's PC-FAX software to send faxes directly from your machine.

- Configure PC-FAX (Windows)
- Configure your PC-Fax Address Book (Windows)

Configure PC-FAX (Windows)

Related Models: MFC-J491DW/MFC-J690DW/MFC-J890DW

Before sending faxes using PC-FAX, personalise the send options in each tab of the **PC-FAX Setup** dialog box.

1. Do one of the following:
   - Windows 7

     Click **(Start)** > **All Programs** > **Brother** > **Brother Utilities**.

     Click the drop-down list and select your model name (if not already selected). Click **PC-FAX** in the left navigation bar, and then click **Setup Sending**.
   - Windows 8 and Windows 10

     Launch (**Brother Utilities**), and then click the drop-down list and select your model name (if not already selected). Click **PC-FAX** in the left navigation bar, and then click **Setup Sending**.

   The **PC-FAX Setup** dialog box appears.

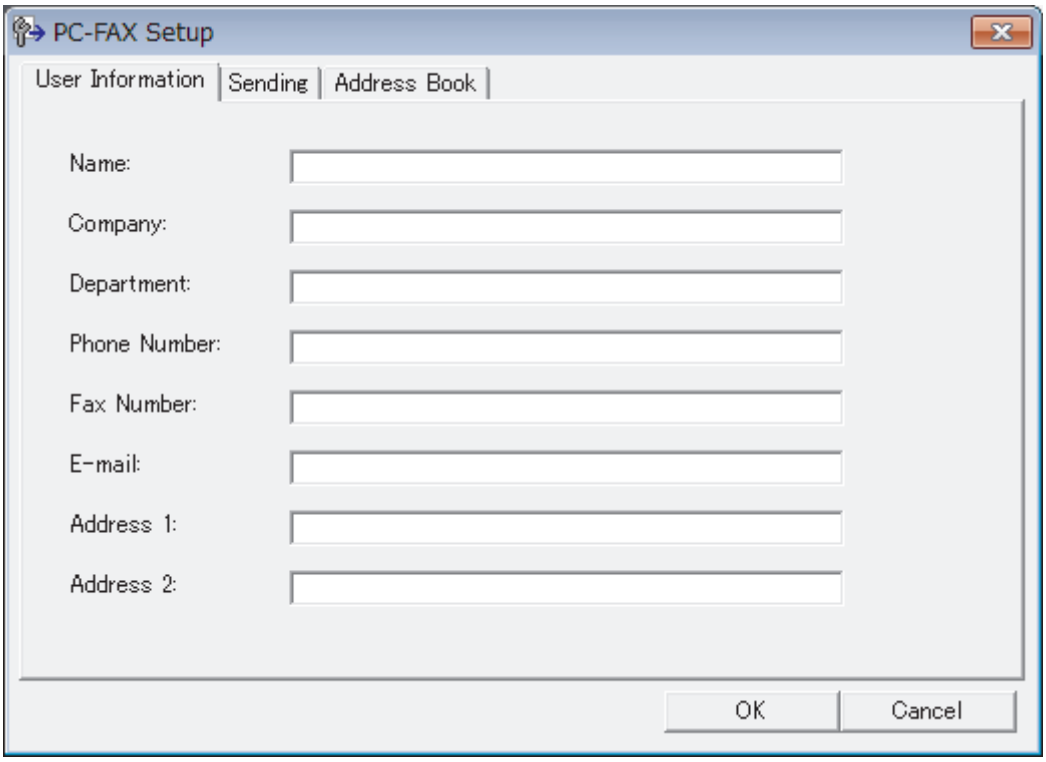

2. Do one of the following:
   - Click the **User Information** tab, and then type your user information in the fields.

   Each Microsoft account can have its own customised **User Information** screen for custom fax headers and cover pages.

   - Click the **Sending** tab, and then type the number needed to access an outside line (if needed) in the **Outside line access** field. Select the **Include header** check box to include the header information.
   - Click the **Address Book** tab, and then select the address book you want to use for PC-FAX from the **Select Address Book** drop-down list.
3. Click **OK**.

Related Information

- PC-FAX Overview (Windows)

Configure your PC-Fax Address Book (Windows)

Add, edit and delete members and groups to personalise your Brother **Address Book**.

- Add a Member to your PC-FAX Address Book (Windows)
- Create a Group in your PC-FAX Address Book (Windows)
- Edit Member or Group Information in your PC-FAX Address Book (Windows)
- Delete a Member or Group in your PC-FAX Address Book (Windows)
- Export your PC-FAX Address Book (Windows)
- Import Information to your PC-FAX Address Book (Windows)

Add a Member to your PC-FAX Address Book (Windows)

Related Models: MFC-J491DW/MFC-J690DW/MFC-J890DW

Add new people and their fax information to the PC-Fax Address Book if you want to send a fax using Brother PC-Fax software.

1. Do one of the following:
   - Windows 7

     Click **(Start)** > **All Programs** > **Brother** > **Brother Utilities**.

     Click the drop-down list and select your model name (if not already selected). Click **PC-FAX** in the left navigation bar, and then click **Address Book (Send)**.
   - Windows 8 and Windows 10

     Launch (**Brother Utilities**), and then click the drop-down list and select your model name (if not already selected). Click **PC-FAX** in the left navigation bar, and then click **Address Book (Send)**.

   The **Address Book** dialog box appears.

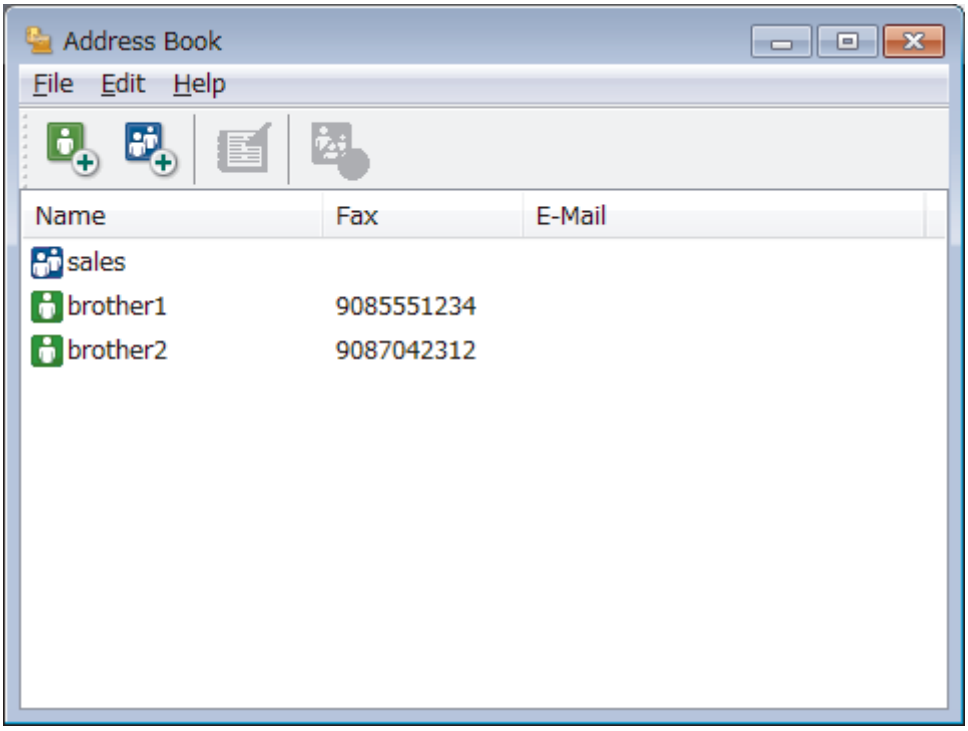

2. Click .

   The **Address Book Member Setup** dialog box appears.

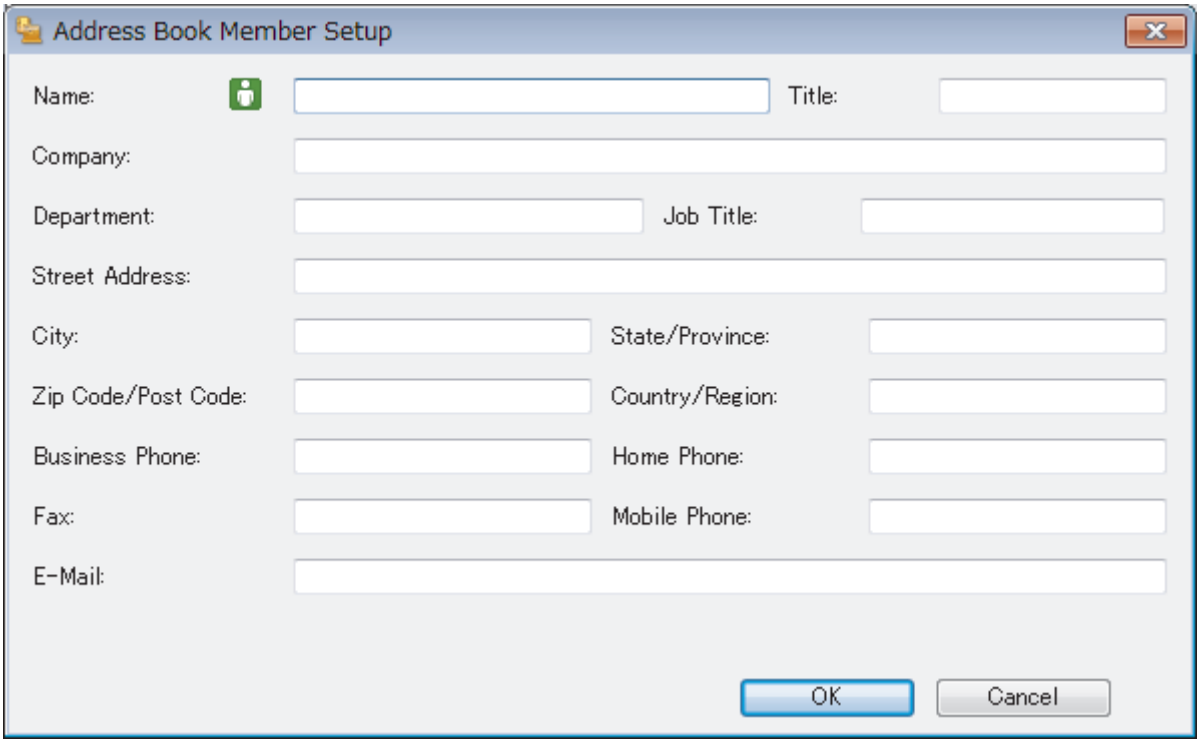

3. Type the member's information in the corresponding fields. Only the **Name** field is required.
4. Click **OK**.

Related Information

- Configure your PC-Fax Address Book (Windows)

Create a Group in your PC-FAX Address Book (Windows)

Related Models: MFC-J491DW/MFC-J690DW/MFC-J890DW

Create a group to broadcast the same PC-FAX to several recipients at one time.

1. Do one of the following:
   - Windows 7

     Click **(Start)** > **All Programs** > **Brother** > **Brother Utilities**.

     Click the drop-down list and select your model name (if not already selected). Click **PC-FAX** in the left navigation bar, and then click **Address Book (Send)**.
   - Windows 8 and Windows 10

     Launch (**Brother Utilities**), and then click the drop-down list and select your model name (if not already selected). Click **PC-FAX** in the left navigation bar, and then click **Address Book (Send)**.

   The **Address Book** dialog box appears.

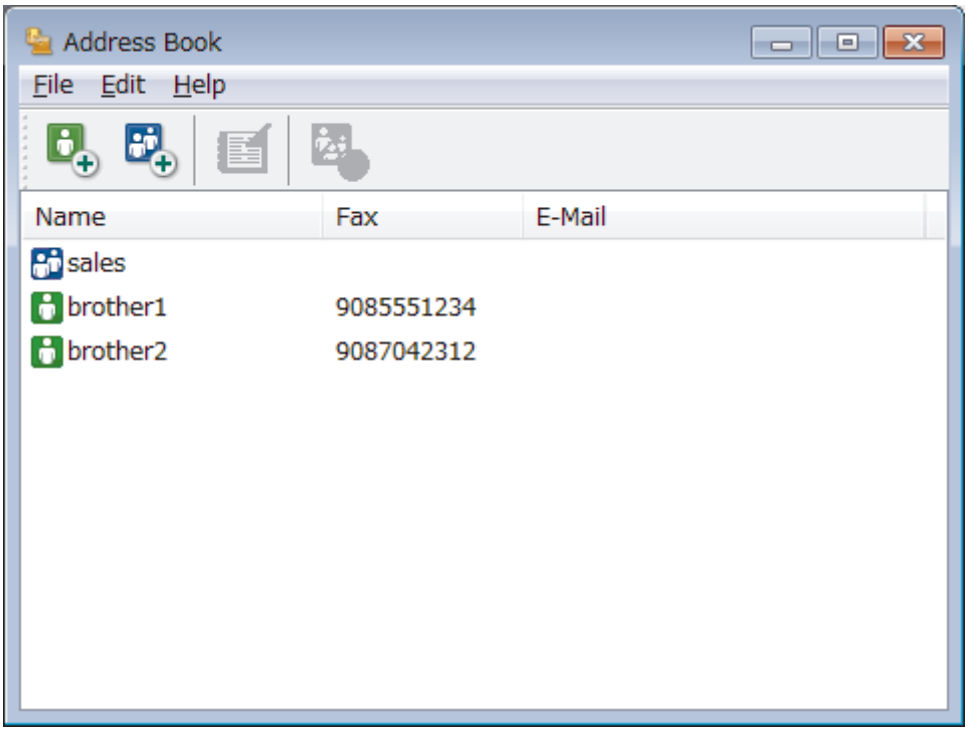

2. Click .

   The **Address Book Group Setup** dialog box appears.

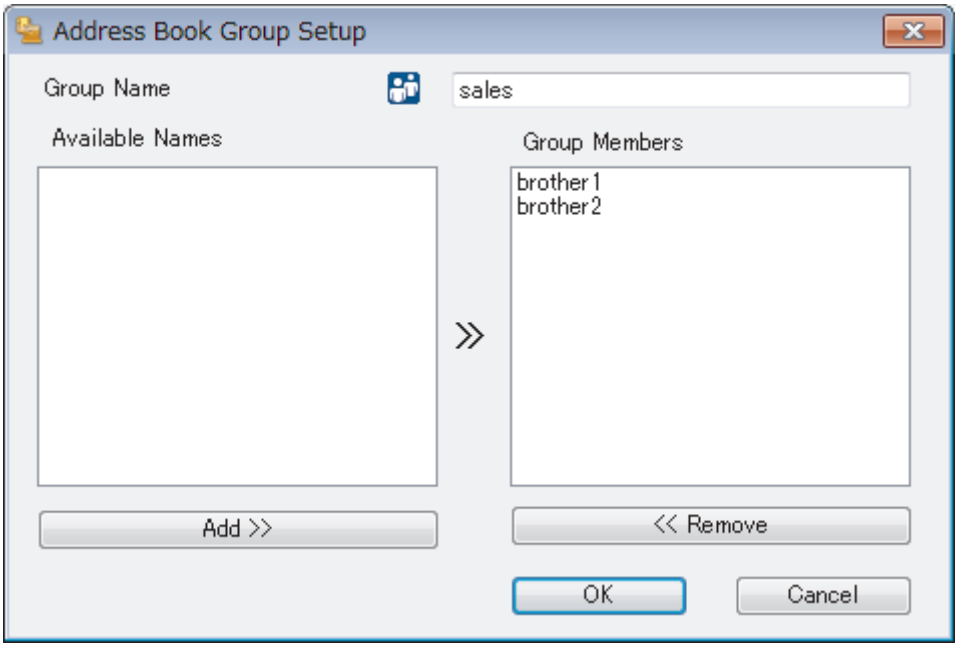

3. Type the name of the new group in the **Group Name** field.
4. In the **Available Names** field, select each name you want to include in the group, and then click **Add >>**. Members added to the group appear in the **Group Members** box.
5. When finished, click **OK**.

Each group can contain up to 50 members.

Related Information

- Configure your PC-Fax Address Book (Windows)

Edit Member or Group Information in your PC-FAX Address Book (Windows)

Related Models: MFC-J491DW/MFC-J690DW/MFC-J890DW

1. Do one of the following:
   - Windows 7

     Click **(Start)** > **All Programs** > **Brother** > **Brother Utilities**.

     Click the drop-down list and select your model name (if not already selected). Click **PC-FAX** in the left navigation bar, and then click **Address Book (Send)**.
   - Windows 8 and Windows 10

     Launch (**Brother Utilities**), and then click the drop-down list and select your model name (if not already selected). Click **PC-FAX** in the left navigation bar, and then click **Address Book (Send)**.

   The **Address Book** dialog box appears.

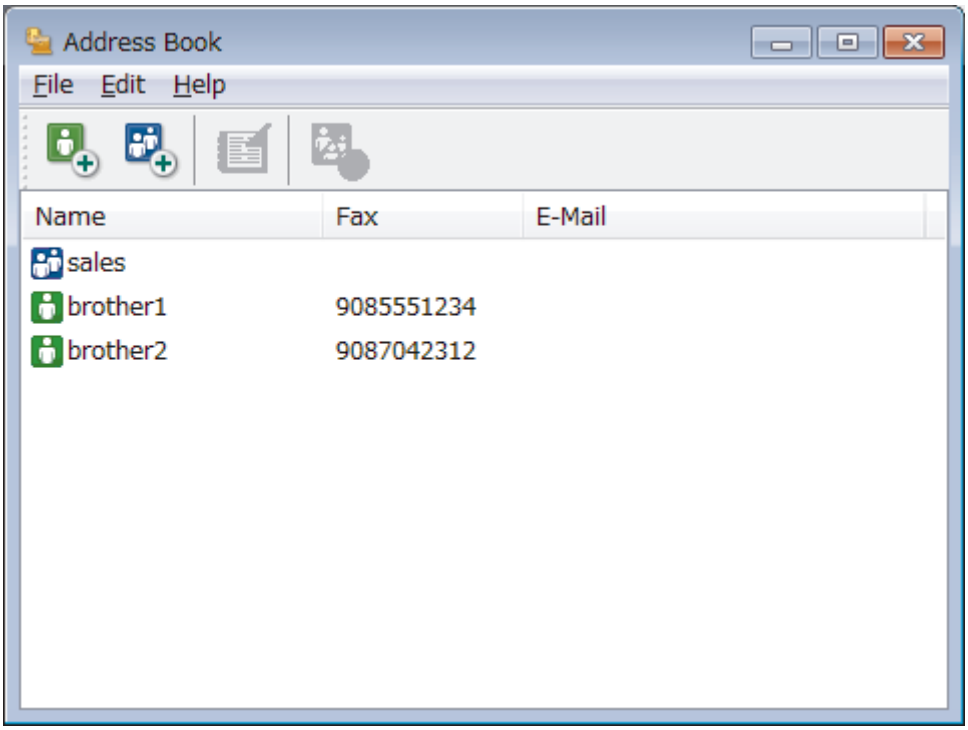

2. Select the member or group you want to edit.
3. Click (**Properties**).
4. Change the member or group information.
5. Click **OK**.

Related Information

- Configure your PC-Fax Address Book (Windows)

Delete a Member or Group in your PC-FAX Address Book (Windows)

Related Models: MFC-J491DW/MFC-J690DW/MFC-J890DW

1. Do one of the following:
   - Windows 7

     Click **(Start)** > **All Programs** > **Brother** > **Brother Utilities**.

     Click the drop-down list and select your model name (if not already selected). Click **PC-FAX** in the left navigation bar, and then click **Address Book (Send)**.
   - Windows 8 and Windows 10

     Launch **(Brother Utilities)**, and then click the drop-down list and select your model name (if not already selected). Click **PC-FAX** in the left navigation bar, and then click **Address Book (Send)**.

   The **Address Book** dialog box appears.

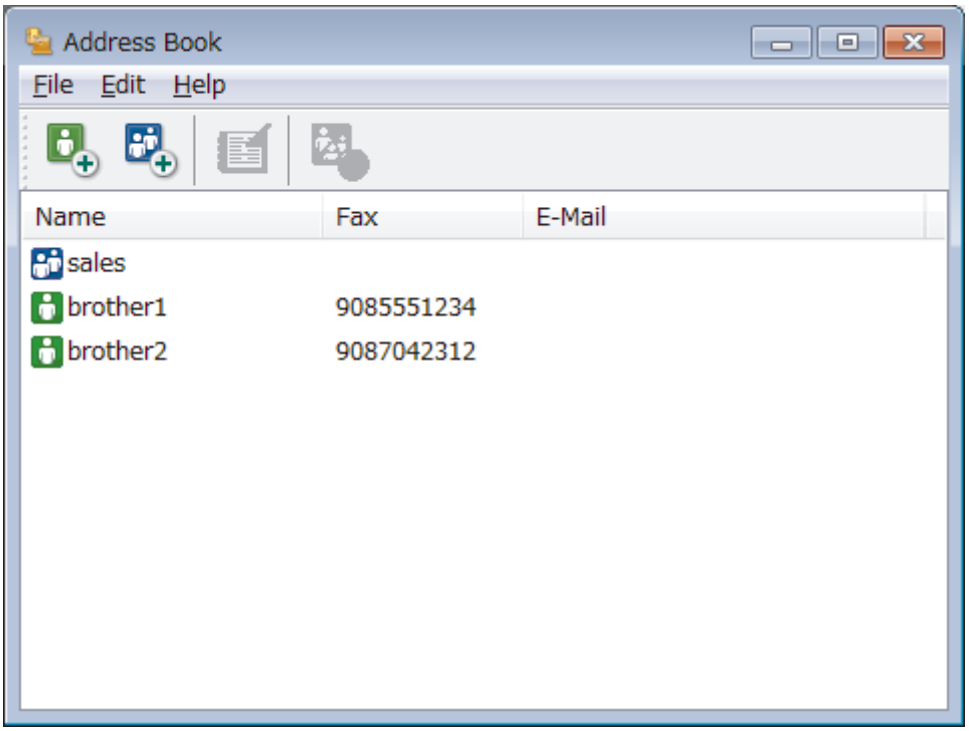

2. Select the member or group you want to delete.
3. Click **(Delete)**.
4. When the confirmation dialog box appears, click **OK**.

Related Information

- Configure your PC-Fax Address Book (Windows)

Export your PC-FAX Address Book (Windows)

Related Models: MFC-J491DW/MFC-J690DW/MFC-J890DW

You can export the Address Book as an ASCII text file (*.csv), a vCard (an electronic business card), or **Remote Setup Dial Data** and save it on your computer.

- You cannot export the group settings when you export the **Address Book** data.

1. Do one of the following:
   - Windows 7

     Click **(Start)** > **All Programs** > **Brother** > **Brother Utilities**.

     Click the drop-down list and select your model name (if not already selected). Click **PC-FAX** in the left navigation bar, and then click **Address Book (Send)**.
   - Windows 8 and Windows 10

     Launch (**Brother Utilities**), and then click the drop-down list and select your model name (if not already selected). Click **PC-FAX** in the left navigation bar, and then click **Address Book (Send)**.

   The **Address Book** dialog box appears.

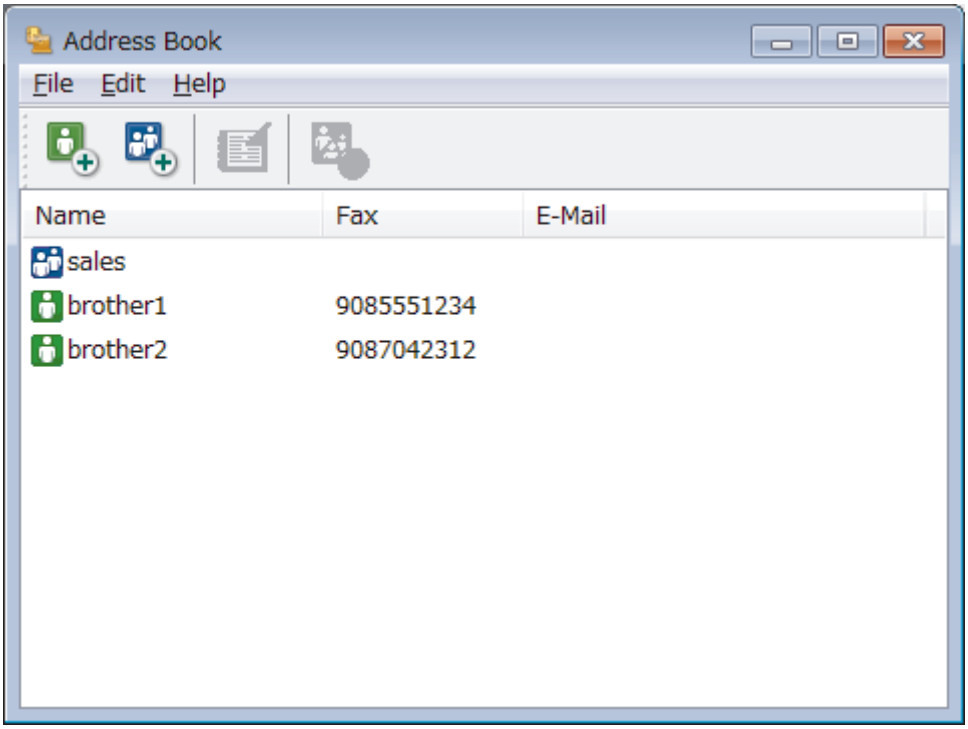

2. Click the **File** menu, and then select **Export**.
3. Select one of the following:
   - **Text**

     The **Select Items** dialog box appears. Go to step 4.
   - **vCard**

     You must select the member you want to export from your address book before selecting this option.

     Browse to the folder where you want to save the vCard, type the vCard name in the **File name** field, and then click **Save**.
   - **Remote Setup Dial Data**

     Browse to the folder where you want to save the data, type the file name in the **File name** field, and then click **Save**.

4. In the **Available Items** field, select the data you want to export, and then click **Add >>**.

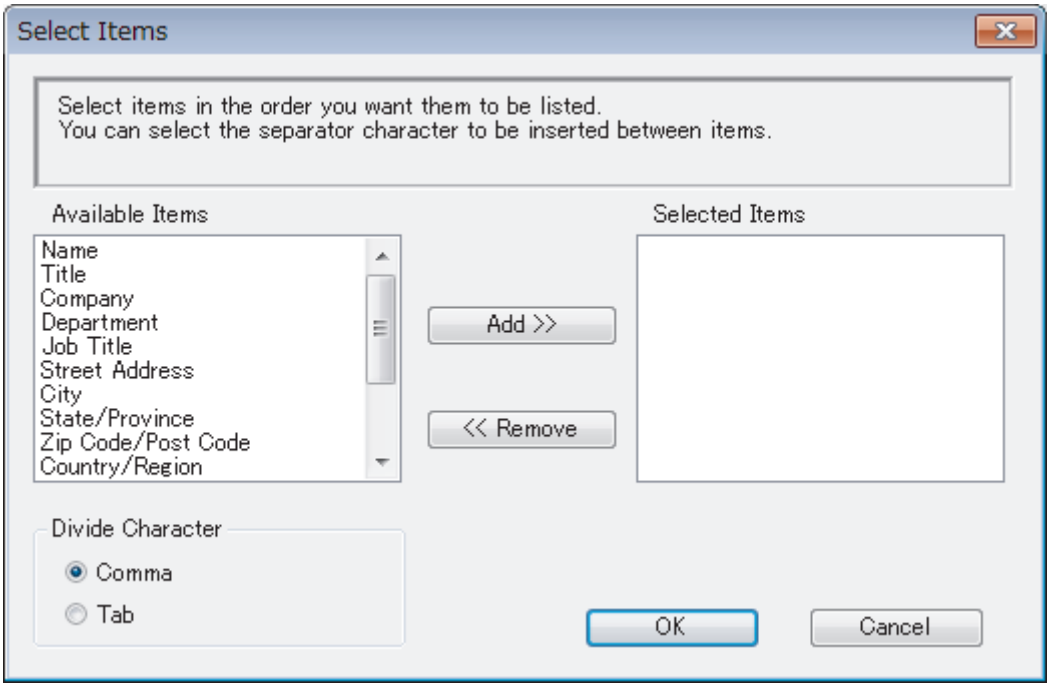

Select and add the items in the order you want them listed.

5. If you are exporting to an ASCII file, under the **Divide Character** section, select the **Tab** or **Comma** option to separate the data fields.
6. Click **OK**.
7. Browse to the folder on your computer where you want to save the data, type the file name, and then click **Save**.

Related Information

- Configure your PC-Fax Address Book (Windows)

Import Information to your PC-FAX Address Book (Windows)

Related Models: MFC-J491DW/MFC-J690DW/MFC-J890DW

You can import ASCII text files (*.csv), vCards (electronic business cards), or **Remote Setup Dial Data** into your Address Book.

1. Do one of the following:
   - Windows 7

     Click **(Start)** > **All Programs** > **Brother** > **Brother Utilities**.

     Click the drop-down list and select your model name (if not already selected). Click **PC-FAX** in the left navigation bar, and then click **Address Book (Send)**.
   - Windows 8 and Windows 10

     Launch (**Brother Utilities**), and then click the drop-down list and select your model name (if not already selected). Click **PC-FAX** in the left navigation bar, and then click **Address Book (Send)**.

   The **Address Book** dialog box appears.

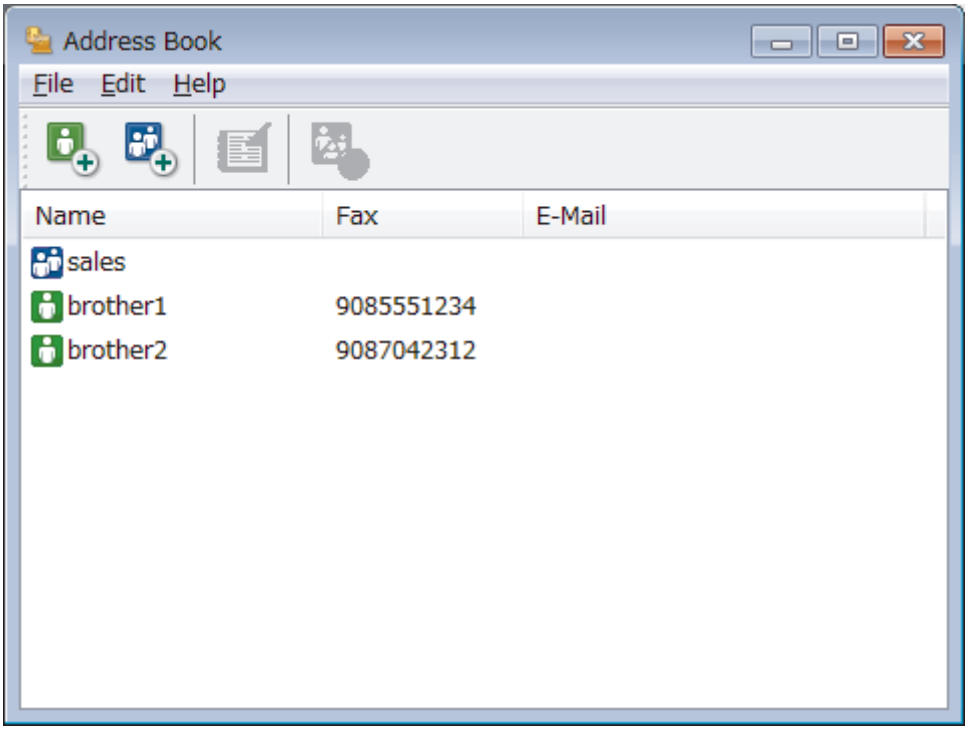

2. Click the **File** menu, and then select **Import**.
3. Select one of the following:
   - **Text**

     The **Select Items** dialog box appears. Go to step 4.
   - **vCard**

     Go to step 7.
   - **Remote Setup Dial Data**

     Go to step 7.
4. In the **Available Items** field, select the data you want to import, and then click **Add >>**.

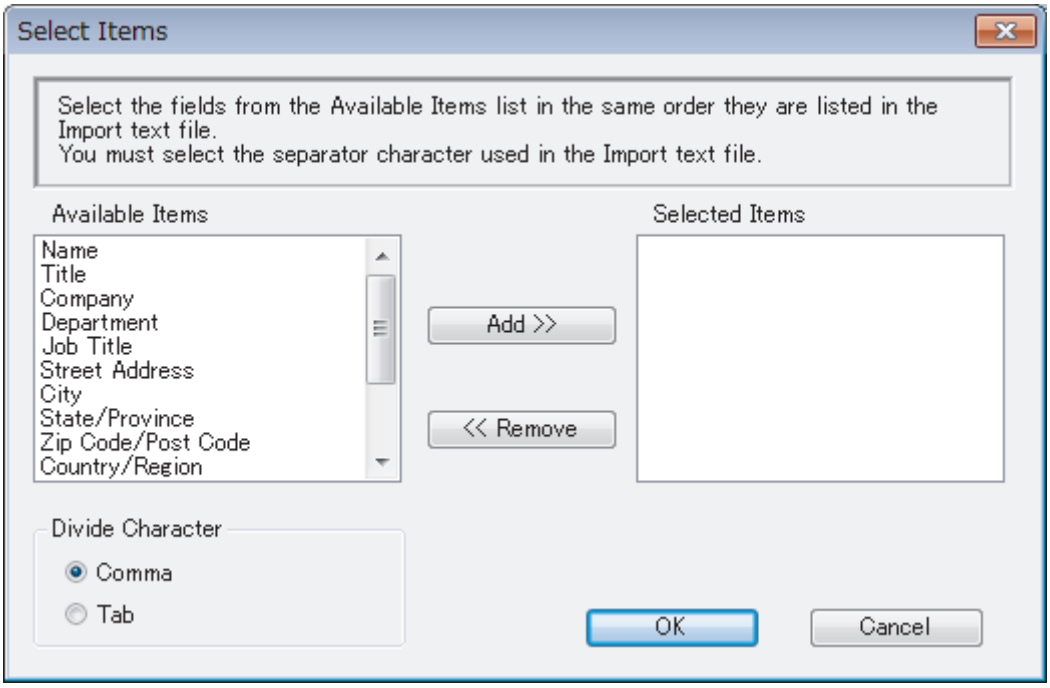

You must select and add fields from the **Available Items** list in the same order they are listed in the import text file.

5. If you are importing an ASCII file, under the **Divide Character** section, select the **Tab** or **Comma** option to separate the data fields.
6. Click **OK**.
7. Browse to the folder where you want to import the data, type the file name, and then click **Open**.

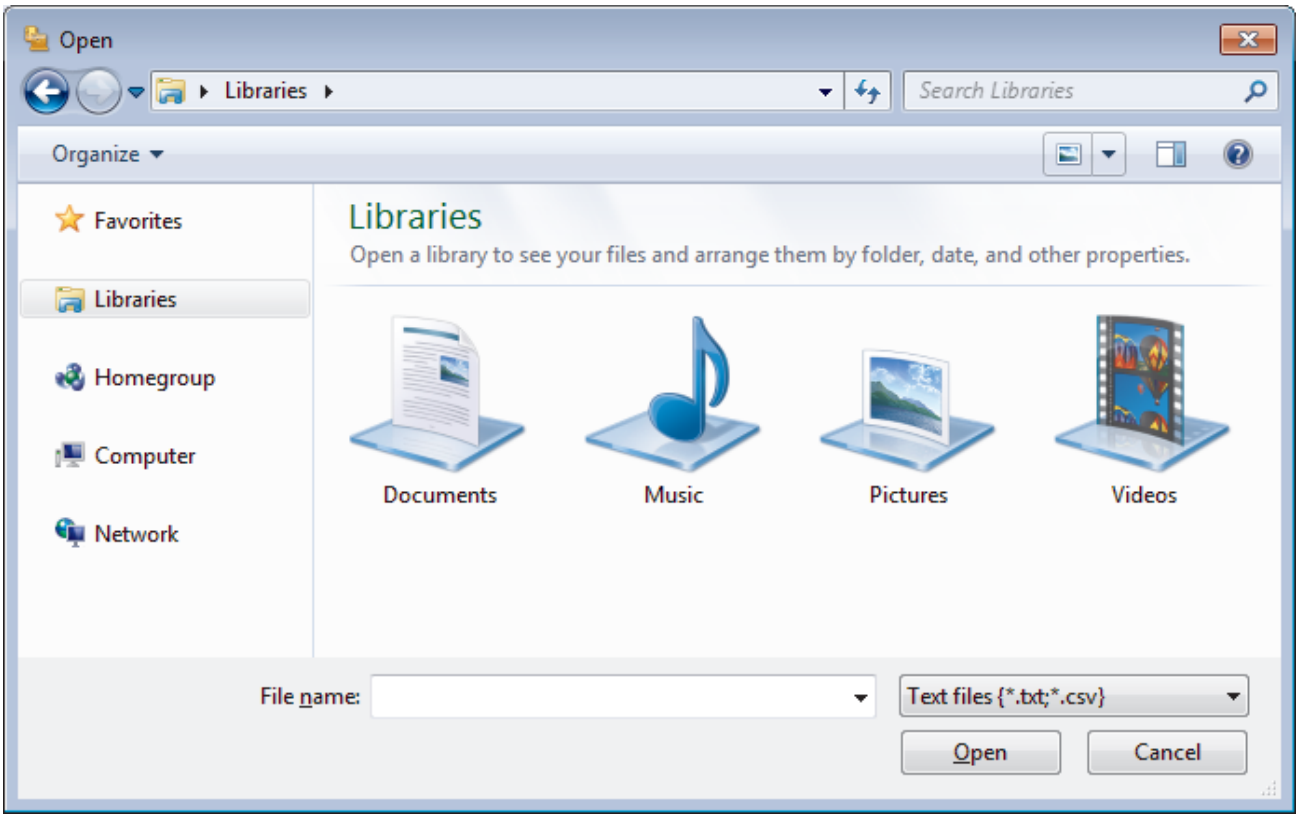

Related Information

- Configure your PC-Fax Address Book (Windows)

Send a Fax Using PC-FAX (Windows)

Related Models: MFC-J491DW/MFC-J690DW/MFC-J890DW

PC-FAX supports only monochrome faxes. A monochrome fax will be sent even if the original data is colour and the receiving fax machine supports colour faxes.

1. Create a file in any application on your computer.
2. Select the print command in your application.
3. Select **Brother PC-FAX** as your printer, and then complete your print operation.
   The **Brother PC-FAX** dialog box appears.

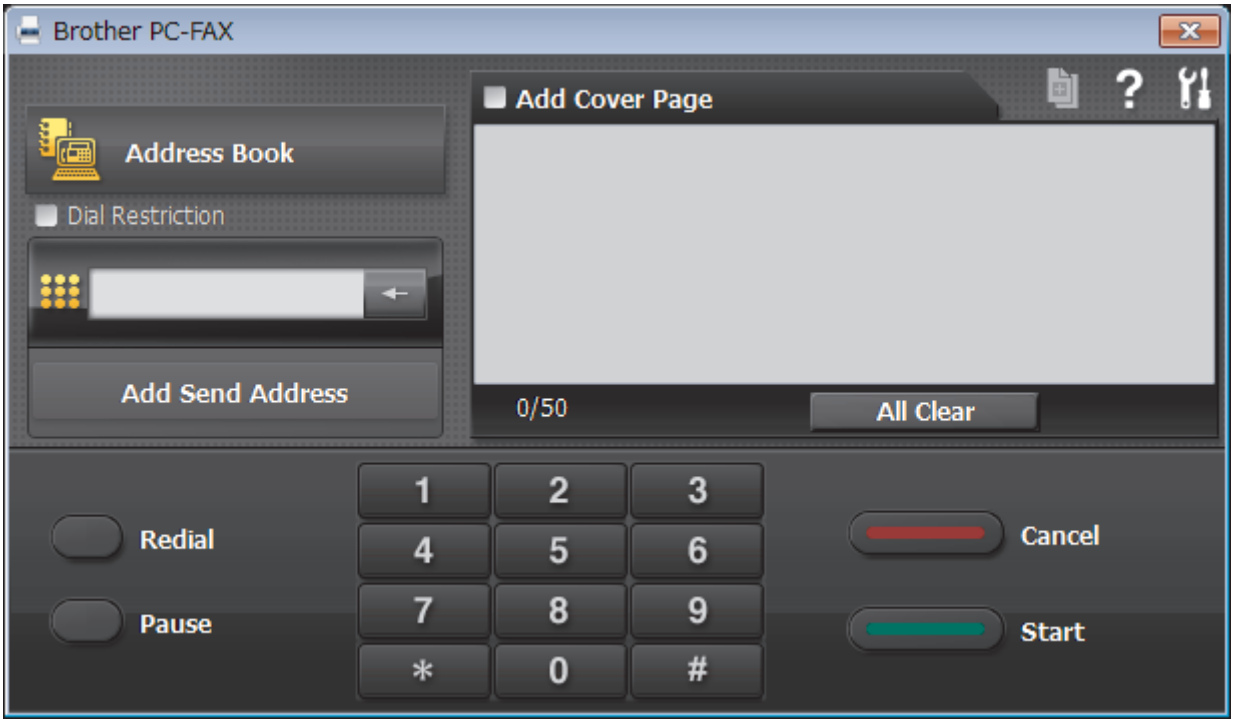

4. Type a fax number using one of the following methods:
   - Click the numbers on the dial pad to type the number, and then click **Add Send Address**.

If you select the **Dial Restriction** check box, a confirmation dialog box will appear for you to re-type the fax number using the keyboard. This feature helps to prevent transmissions to the wrong destination.

   - Click the **Address Book** button, and then select a member or group from the Address Book.

If you make a mistake, click **All Clear** to delete all entries.

5. To include a cover page, select the **Add Cover Page** check box. You can also click to create or edit a cover page.
6. Click **Start** to send the fax.

- To cancel the fax, click **Cancel**.
- To redial a number, click **Redial** to show the last five fax numbers, select a number, and then click **Start**.

Related Information

- PC-FAX for Windows

Receive Faxes on Your Computer (Windows)

Use Brother's PC-FAX software to receive faxes on your computer, screen them and print only those faxes you want.

- Receive Faxes Using PC-FAX Receive (Windows)

Receive Faxes Using PC-FAX Receive (Windows)

Related Models: MFC-J491DW/MFC-J690DW/MFC-J890DW

Brother's PC-FAX Receive software lets you view and store faxes on your computer. It is automatically installed when you install the Brother software and drivers and works on locally or network-connected machines.

- PC-FAX Receive supports only monochrome faxes. When you receive a colour fax, your machine prints the colour fax at your machine but does not send the fax to your computer.

When you turn off your computer, your machine will continue to receive and store faxes in your Brother machine's memory. The machine's LCD will display the number of stored faxes received. When you start this application, the software will transfer all received faxes to your computer at once. You can enable the Backup Print option if you want the machine to print a copy of the fax before the fax is sent to your computer, or before the computer is switched off. You can configure the Backup Print settings from your Brother machine.

Related Information

- Receive Faxes on Your Computer (Windows)
- Run Brother's PC-FAX Receive on Your Computer (Windows)
- View Received PC-FAX Messages (Windows)
- Use PC-Fax Receive to Transfer Received Faxes to Your Computer (Windows only)

Run Brother's PC-FAX Receive on Your Computer (Windows)

Related Models: MFC-J491DW/MFC-J690DW/MFC-J890DW

We recommend selecting the **Start PC-FAX Receive on computer startup** check box so that the software runs automatically and can transfer any faxes upon computer startup.

1. Do one of the following:
   - Windows 7

     Click **(Start)** > **All Programs** > **Brother** > **Brother Utilities**.

     Click the drop-down list and select your model name (if not already selected). Click **PC-FAX** in the left navigation bar, and then click **Receive**.
   - Windows 8 and Windows 10

     Launch (**Brother Utilities**), and then click the drop-down list and select your model name (if not already selected). Click **PC-FAX** in the left navigation bar, and then click **Receive**.
2. Confirm the message and click **Yes**.

   The **PC-FAX Receive** window appears. The (**PC-FAX Receive**) icon also appears in your computer task tray.

Related Information

- Receive Faxes Using PC-FAX Receive (Windows)
- Set Up Your Computer for PC-FAX Receiving (Windows)
- Add Your Brother Machine to PC-FAX Receiving (Windows)

Set Up Your Computer for PC-FAX Receiving (Windows)

Related Models: MFC-J491DW/MFC-J690DW/MFC-J890DW

1. Double-click the (**PC-FAX Receive**) icon in your computer task tray.

   The **PC-FAX Receive** window appears.
2. Click **Settings**.
3. Configure these options as needed:

   Preferences

   Configure to start PC-FAX Receive automatically when you start Windows.

   Save

   Configure the path to save PC-FAX files and select the received document format.

   Upload to

   Configure the path to the SharePoint server and select the option to upload automatically or manually (available only for Administrators).

   Device

   Select the Brother machine that you want to receive PC-FAX.

   Lock (available only for Administrators)

   Restrict users who do not have administrator privileges from configuring the settings options shown above.

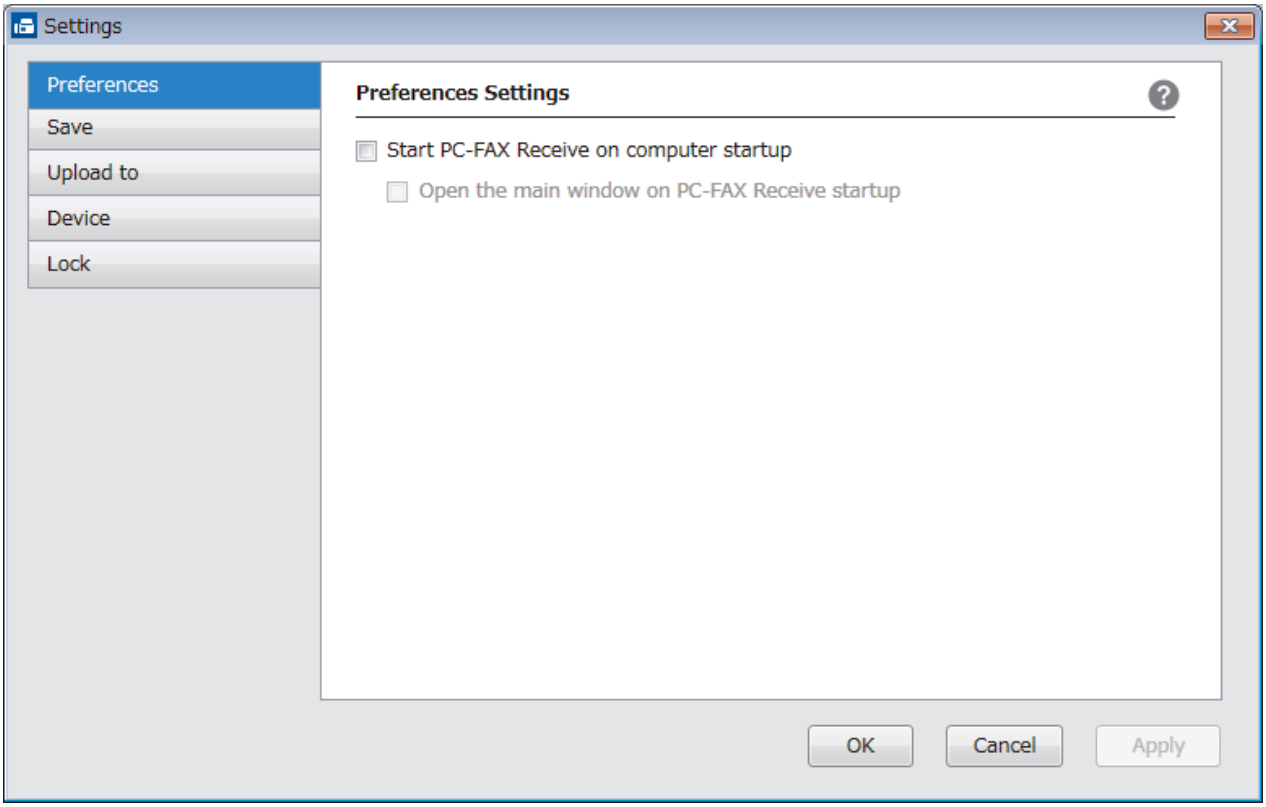

4. Click **OK**.

Related Information

- Run Brother's PC-FAX Receive on Your Computer (Windows)

Add Your Brother Machine to PC-FAX Receiving (Windows)

Related Models: MFC-J491DW/MFC-J690DW/MFC-J890DW

- If you installed the machine following the instructions for a network user, then the machine should already be configured for your network.

1. Double-click the (**PC-FAX Receive**) icon in your computer task tray.

   The **PC-FAX Receive** window appears.
2. Click **Settings**.
3. Click **Device** > **Add**.

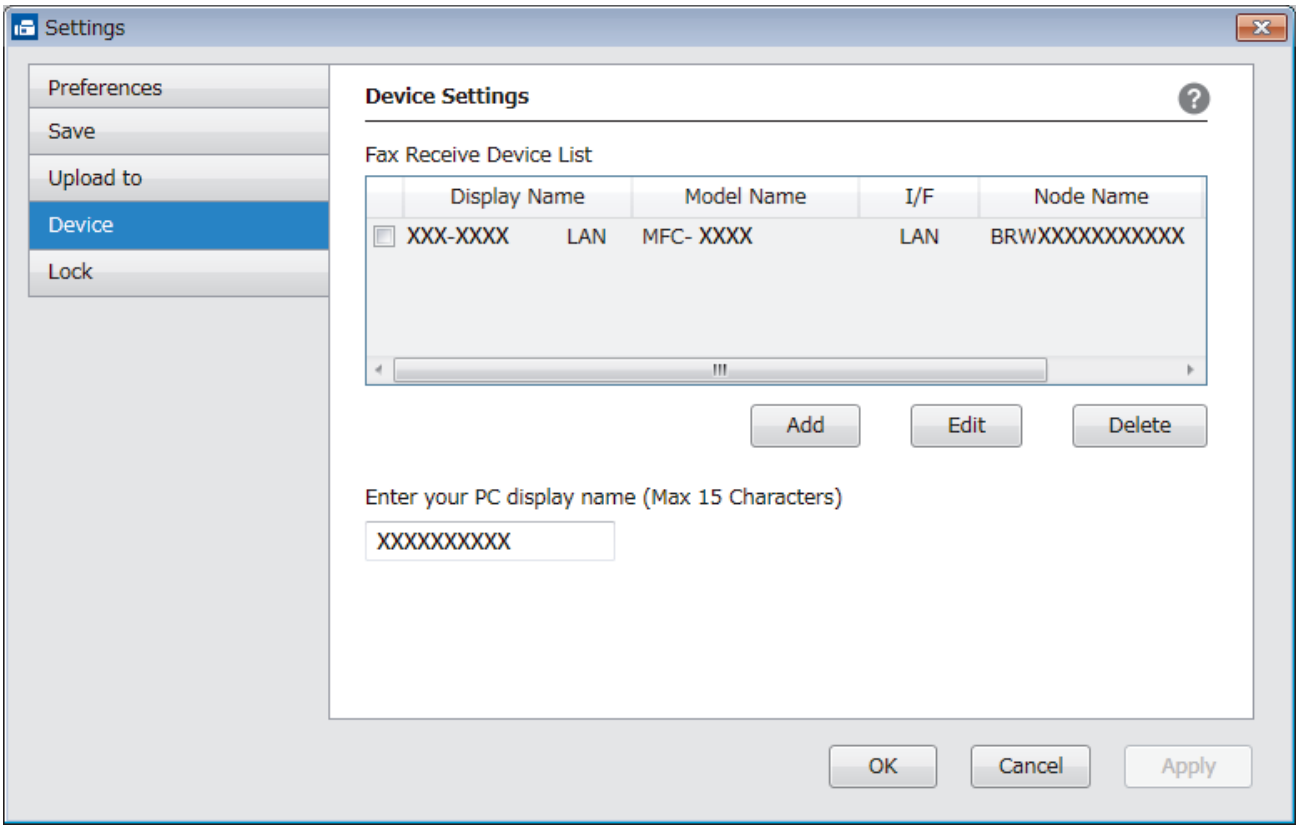

4. Select the appropriate connection method.

   Select your machine from the automatic search results below.

   Connected Brother machines will be displayed. Select a device from the list. Click **OK**.

   Specify your machine by IP address

   Type the machine's IP address in the **IP Address** field, and then click **OK**.

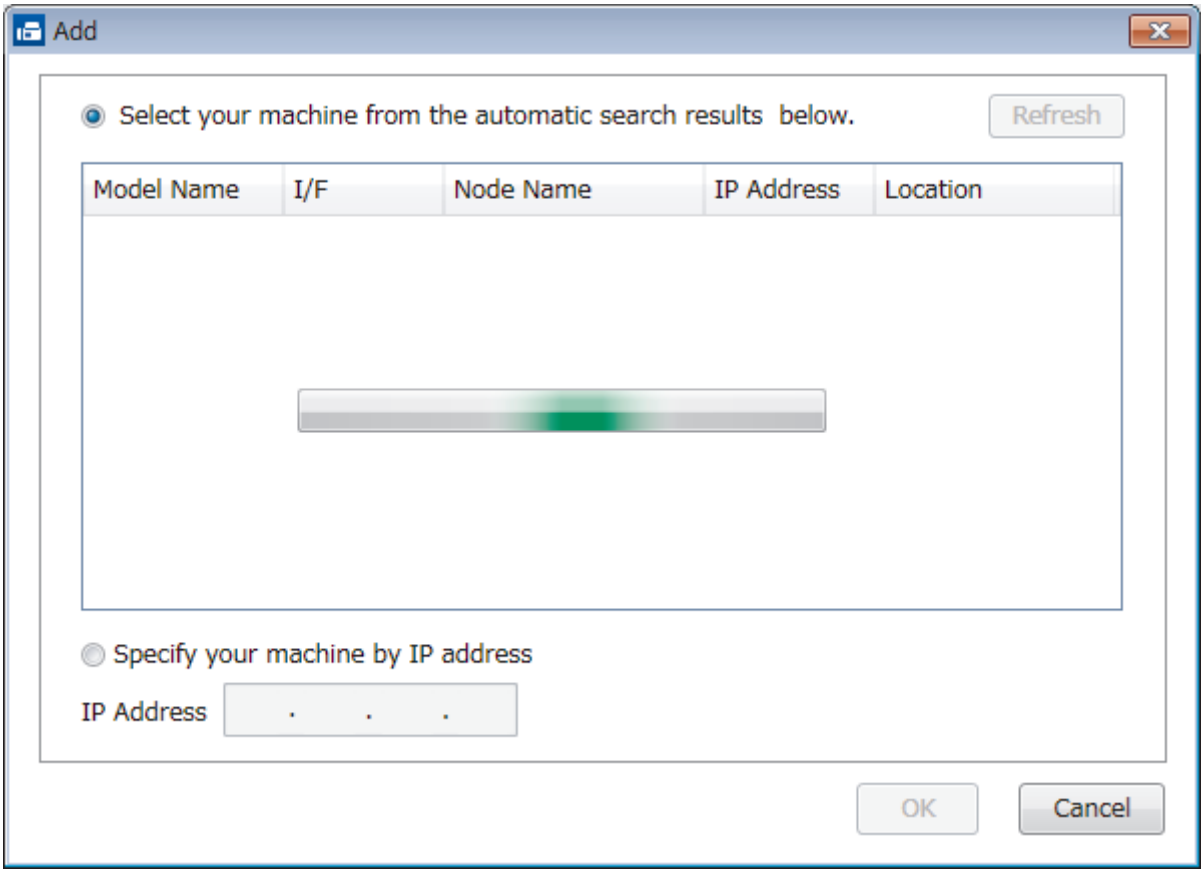

5. To change the computer name that will appear on the machine's LCD, type the new name in the **Enter your PC display name (Max 15 Characters)** field.
6. Click **OK**.

Related Information

- Run Brother's PC-FAX Receive on Your Computer (Windows)

View Received PC-FAX Messages (Windows)

Related Models: MFC-J491DW/MFC-J690DW/MFC-J890DW

Receiving Status

Icon	Indicated Status
	Standby mode No unread messages
	Receiving messages
	Messages received Unread messages

1. Double-click the (**PC-FAX Receive**) icon in your computer task tray.

   The **PC-FAX Receive** window appears.

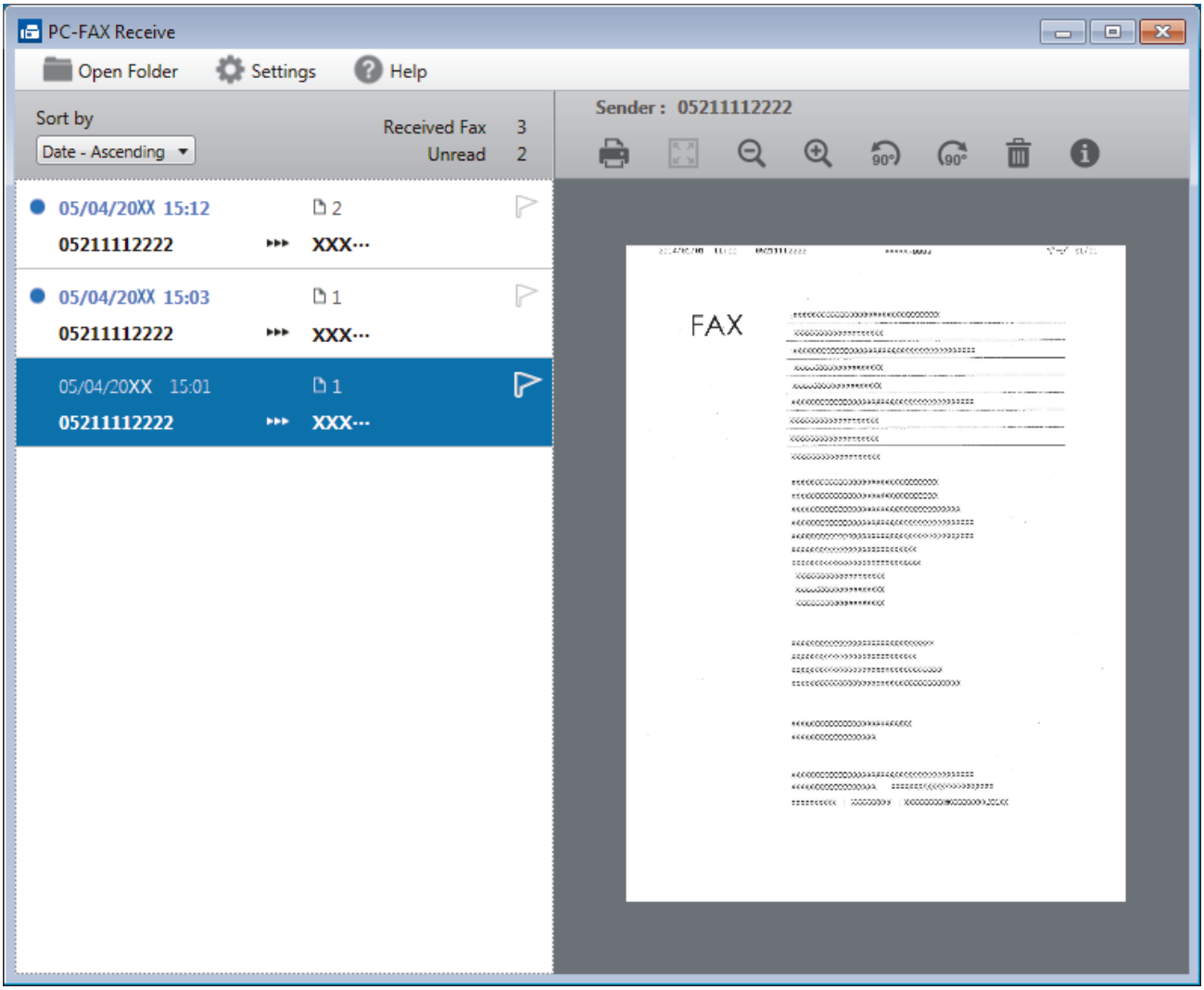

2. Click any faxes in the list to view them.
3. When finished, click in the right top corner of the window to close it.

Even after closing the window, PC-FAX Receive is active and the (**PC-FAX Receive**) icon will remain in your computer task tray. To close PC-FAX Receive, click the icon in the computer task tray and click **Close**.

Related Information

- Receive Faxes Using PC-FAX Receive (Windows)

PC-FAX for Mac

Use Brother's PC-FAX software to send faxes directly from your Mac without printing them. This feature helps reduce your paper consumption and save time.

- Send Faxes from Your Application (Mac)

Send Faxes from Your Application (Mac)

Related Models: MFC-J491DW/MFC-J690DW/MFC-J890DW

PC-FAX supports only monochrome faxes. A monochrome fax will be sent even if the original data is colour and the receiving fax machine supports colour faxes.

1. Create a document in a Mac application.
2. From an application, such as Apple TextEdit, click the **File** menu, and then select **Print**.
3. Click the application pop-up menu, and then select the **Send Fax** option.

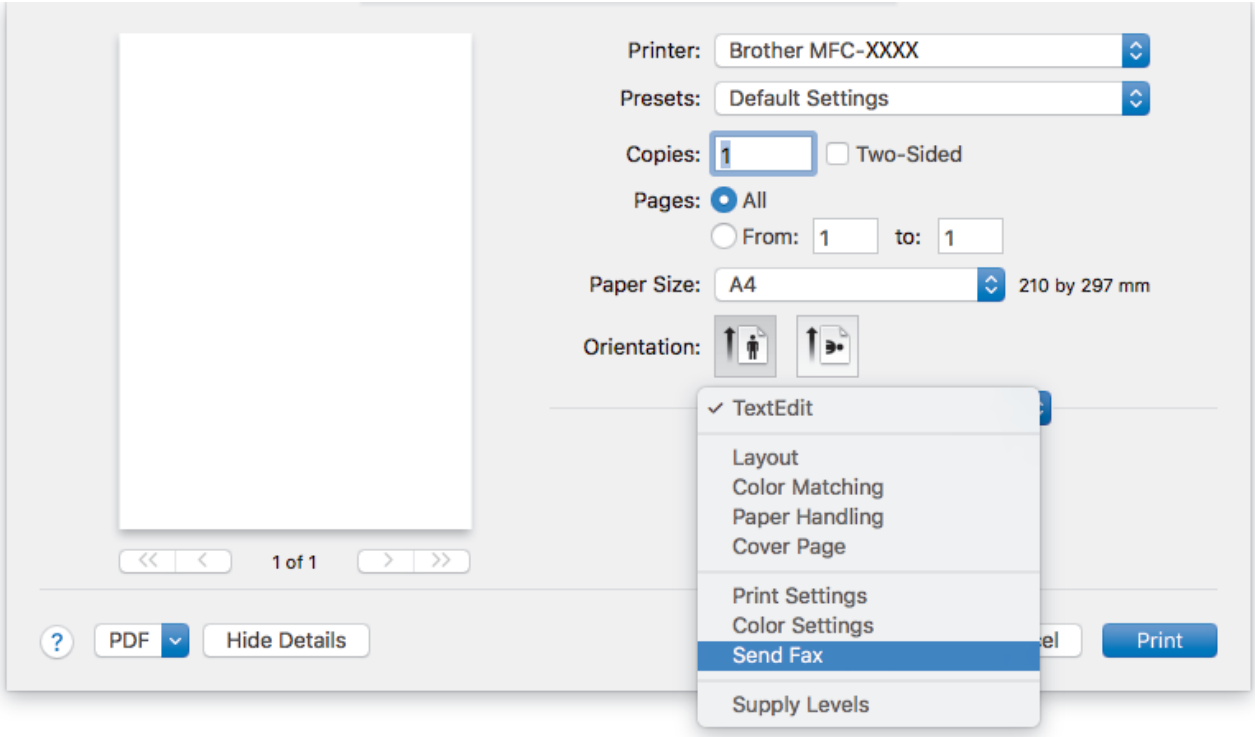

4. Click the **Output** pop-up menu, and then select the **Facsimile** option.

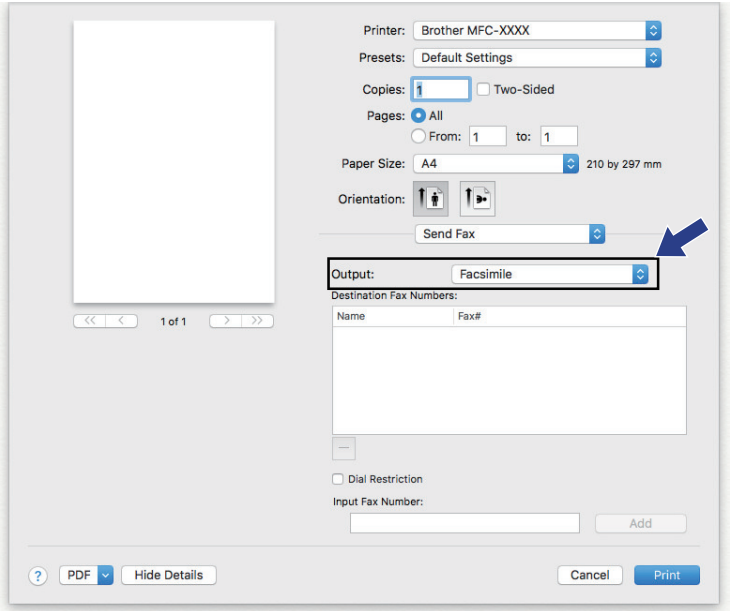

5. Type a fax number in the **Input Fax Number** field, and then click **Add**.
   The fax number is displayed in the **Destination Fax Numbers** field.

To send a fax to more than one number, click the **Add** button after entering the first fax number and type the next fax number. The destination fax numbers will be listed in the **Destination Fax Numbers** field.

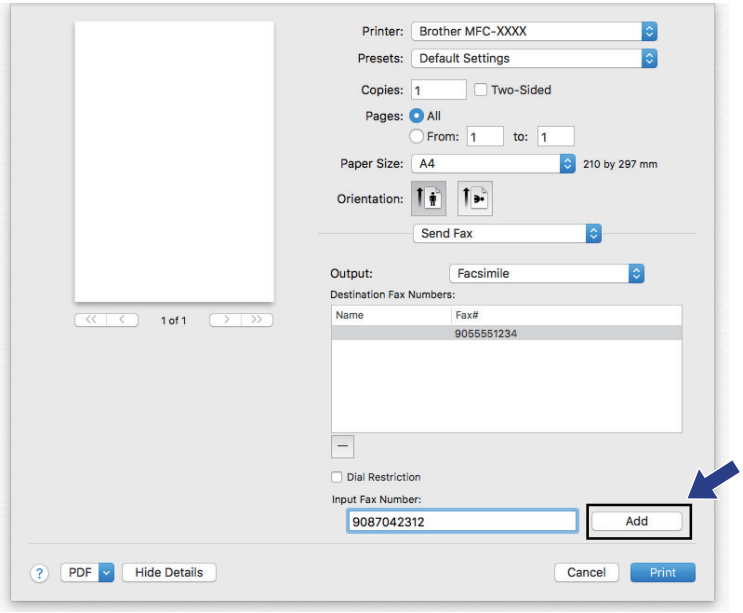

6. Click **Print** to send the fax.

Related Information

- PC-FAX for Mac

PhotoCapture Center

- Print Photos Directly from Media
- Copy Photos from Media to a Computer
- Print Photos from ControlCenter4 (Windows)

Print Photos Directly from Media

When your machine is *not* connected to your computer, you can print photos directly from digital camera media or a USB Flash memory drive, scan documents and save them directly to a memory card or USB flash drive. When your machine is connected to a computer, you can use your computer to access a memory card or USB flash drive inserted in the front of the machine.

- Compatible Media
- Important Information about Photo Printing
- Print Photos from Media on the Brother Machine

Compatible Media

Related Models: DCP-J572DW/DCP-J772DW/MFC-J690DW/MFC-J890DW

Your Brother machine has media drives (slots) for use with common data storage and digital camera media.

IMPORTANT

The USB direct interface supports only USB flash drives and digital cameras that use the USB mass storage standard. Other USB devices are not supported.

Compatible Media	
USB flash drive (DCP-J772DW/MFC-J690DW/MFC-J890DW)	
SD Memory Card SDHC Memory Card SDXC Memory Card MultiMediaCard MultiMediaCard plus	
miniSD (Adapter required) miniSDHC (Adapter required) microSD (Adapter required) microSDHC (Adapter required) MultiMediaCard mobile (Adapter required)	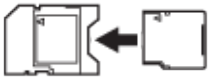

Related Information

- Save Scanned Data to a Memory Card or USB Flash Drive
- Print Photos Directly from Media

Important Information about Photo Printing

Related Models: DCP-J572DW/DCP-J772DW/MFC-J690DW/MFC-J890DW

USB flash drive support is available only for certain models (DCP-J772DW/MFC-J690DW/MFC-J890DW).

Your machine is designed to be compatible with modern digital camera image files, memory cards and USB flash drives. Read the points below to avoid errors:

- The image file extension must be .JPG (other image file extensions like .JPEG, .TIF, .GIF and so on will not be recognised).
- Direct photo printing must be performed separately from photo printing operations using the computer. (Simultaneous operation is not available.)
- The machine can read up to 999 files [1] on a memory card or USB flash drive.

Be aware of the following:

- When printing an index or image, the machine will print all the valid images, even if one or more images have been corrupted. Corrupted images will not be printed.
- (Memory card users)

  Your machine is designed to read memory cards that have been formatted by a digital camera.

  When a digital camera formats a memory card, it creates a special folder into which it copies image data. If you must use your computer to modify the image data stored on a memory card, we recommend that you do not modify the folder structure created by the digital camera. When saving new or modified image files to the memory card, we also recommend you use the same folder your digital camera uses. If the data is not saved to the same folder, the machine may not be able to read the file or print the image.
- (USB flash drive users)

  Your machine supports USB flash drives that have been formatted by Windows.

Related Information

- Print Photos Directly from Media

1 The folder inside memory cards or USB flash drives is also counted.

Print Photos from Media on the Brother Machine

- Preview and Print Photos from Media
- Print a Photo Index Sheet (Thumbnails) from Media
- Print Photos by Image Number
- Print ID Photos
- Print Photos with Auto Cropping
- Print Borderless Photos from Media
- Print the Date from Your Photo's Data
- Print Settings for Photos

Preview and Print Photos from Media

Related Models: DCP-J572DW/DCP-J772DW/MFC-J690DW/MFC-J890DW

Preview your photos on the LCD before you print them.

USB flash drive support is available only for certain models (DCP-J772DW/MFC-J690DW/MFC-J890DW).

- If your photos are large files, there may be a delay before each photo is displayed.

>> DCP-J572DW
>> DCP-J772DW/MFC-J690DW/MFC-J890DW

DCP-J572DW

1. Open the media slot cover.

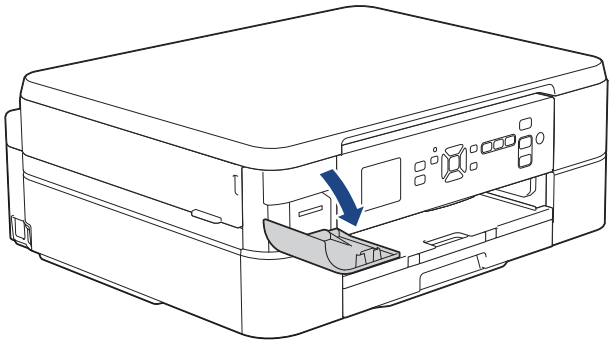

2. Put the media in the slot.
3. Press ▲ or ▼ to select `[JPEG Print]`. Press **OK**.
4. Press ▲ or ▼ to select `[Select Files]`. Press **OK**.

To print all photos, press ▲ or ▼ to select `[Print All]`, and then press **OK**.

5. Press ◀ or ▶ to display the photo you want to print.
6. Press **+** or **-** on the control panel repeatedly to enter the number of copies you want.
7. Repeat the last two steps until you have selected all the photos you want to print.

Press **Clear/Back** to go back to the previous level.

8. Press **OK**.
9. To change the print settings, press ▲ or ▼ to select the setting you want to change, and then press **OK**. Press ▲ or ▼ to select the option you want, and then press **OK**.
10. Press **Colour Start**.

DCP-J772DW/MFC-J690DW/MFC-J890DW

1. Open the media slot cover.

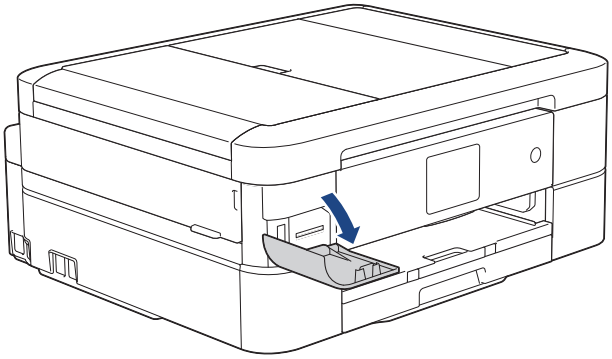

2. Put the memory card or USB flash drive in the correct slot.
3. Press [Photo] > [Select Files].
4. Press ◀ or ▶ to display the photo you want to print, and then press it.

To print all photos, press [Print All], and then press [Yes] to confirm.

5. Enter the number of copies in one of the following ways:
   - Press [-] or [+] on the touchscreen.
   - Press × 01 to display the keyboard on the touchscreen, and then enter the number of copies using the touchscreen keyboard. Press [OK].
6. Press [OK].
7. Repeat the last three steps until you have selected all the photos you want to print.
8. Press [OK].
9. Read and confirm the displayed list of options.
10. To change the print settings, press [Print Settings].
    When finished, press [OK].
11. Press [Start].

Related Information

- Print Photos from Media on the Brother Machine
- Print Settings for Photos

Print a Photo Index Sheet (Thumbnails) from Media

Related Models: DCP-J572DW/DCP-J772DW/MFC-J690DW/MFC-J890DW

Print a photo Index Sheet to see small preview versions of all pictures on your memory card or USB flash drive.

USB flash drive support is available only for certain models (DCP-J772DW/MFC-J690DW/MFC-J890DW).

- The machine assigns numbers for images (such as No.1, No.2, No.3, and so on).

  The machine does not recognise any other numbers or file names that your digital camera or computer has used to identify the pictures.
- Only file names that are 20 characters or less will be printed correctly on the index sheet.
- File names cannot be printed correctly if they contain non-alphanumeric characters, but non-alphanumeric characters do not affect photo print settings.

>> DCP-J572DW
>> DCP-J772DW/MFC-J690DW/MFC-J890DW

DCP-J572DW

1. Open the media slot cover.
2. Put the media in the slot.
3. Press ▲ or ▼ to select `[JPEG Print]`. Press **OK**.
4. Press ▲ or ▼ to select the following:
   a. Select `[Index Print]`. Press **OK**.
   b. Select `[Print Index Sheet]`. Press **OK**.
5. To change the print settings, press ▲ or ▼ to select the setting you want to change, and then press **OK**. Press ▲ or ▼ to select the option you want, and then press **OK**.

Option	Description
`Paper Type`	Select the paper type.
`Paper Size`	Select the paper size.

6. Press **Colour Start**.

DCP-J772DW/MFC-J690DW/MFC-J890DW

1. Open the media slot cover.
2. Put the memory card or USB flash drive in the correct slot.
3. Press `[Photo]` > `[Index Print]` > `[Print Index Sheet]`.
4. If you want to change the print settings, press `[Print Settings]`.

   When finished, press `[OK]`.

Option	Description
`Paper Type`	Select the paper type.
`Paper Size`	Select the paper size.

5. Press `[Start]`.

Related Information

- Print Photos from Media on the Brother Machine
- Print Photos by Image Number

Print Photos by Image Number

Related Models: DCP-J572DW/DCP-J772DW/MFC-J690DW/MFC-J890DW

Before you can print an individual image, you must print the photo Index Sheet (thumbnails) to know the image number.

>> DCP-J572DW
>> DCP-J772DW/MFC-J690DW/MFC-J890DW

DCP-J572DW

1. Open the media slot cover.
2. Put the media in the slot.
3. Press ▲ or ▼ to select `[JPEG Print]`. Press **OK**.
4. Press ▲ or ▼ to select the following:
   a. Select `[Index Print]`. Press **OK**.
   b. Select `[Print Photos]`. Press **OK**.
5. Enter the image numbers you want to print using the keyboard displayed on the LCD. After you have selected the image numbers, press ▲, ▼, ◀ or ▶ to select `[OK]`, and then press **OK**.

- Enter multiple numbers at one time using a comma or a hyphen. For example, enter **1, 3, 6** to print images No.1, No.3 and No.6. Print a range of images using a hyphen. For example, enter **1-5** to print images No.1 to No.5.
- Enter up to 12 characters (including commas and hyphens) for the image numbers you want to print.

6. Press **+** or **-** on the control panel repeatedly to enter the number of copies you want.
7. To change the print settings, press ▲ or ▼ to select the setting you want to change, and then press **OK**. Press ▲ or ▼ to select the option you want, and then press **OK**.
8. Press **Colour Start**.

DCP-J772DW/MFC-J690DW/MFC-J890DW

1. Open the media slot cover.
2. Put the memory card or USB flash drive in the correct slot.
3. Press `[Photo]` > `[Index Print]` > `[Print Photos]`.
4. Enter the image numbers you want to print using the touchscreen. After you have selected the image numbers, press `[OK]`.

- Enter multiple numbers at one time using a comma or a hyphen. For example, enter **1, 3, 6** to print images No.1, No.3 and No.6. Print a range of images using a hyphen. For example, enter **1-5** to print images No.1 to No.5.
- Enter up to 12 characters (including commas and hyphens) for the image numbers you want to print.

5. Enter the number of copies in one of the following ways:
   - Press `[-]` or `[+]` on the touchscreen.
   - Press × 01 to display the keyboard on the touchscreen, and then enter the number of copies using the touchscreen keyboard. Press `[OK]`.
6. To change the print settings, press `[Print Settings]`.
   When finished, press `[OK]`.
7. Press `[Start]`.

Related Information

- Print Photos from Media on the Brother Machine
- Print a Photo Index Sheet (Thumbnails) from Media
- Print Settings for Photos

Print ID Photos

Related Models: DCP-J772DW/MFC-J690DW/MFC-J890DW

Select a photo stored in a memory card or USB flash drive and print ID photos for your resume, passport and so on. You can print four ID photos on one sheet of paper, and crop large images to preset sizes.

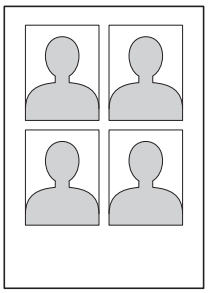

Only one photo will be printed when you select the [2x2inch] or [50x70mm] option in the ID Photo Size setting, and the [10x15cm] option in the Paper Size setting.

1. Open the media slot cover.
2. Put the memory card or USB flash drive in the correct slot.
3. Press [Photo] > [ID Photo Print].
4. Press ◄ or ► to display the photo you want, and then press it.
5. Press ▲ or ▼ to adjust the size of the crop you want, and then press it.

The machine crops the photo to the selected size. To crop to a different size, repeat these steps.

6. Confirm the displayed image. Rotate the image if needed by pressing .
7. Press [OK].
8. To change the print settings, press [Print Settings].

Option	Description
Print Quality	Select the print resolution for your type of document.
Paper Type	Select the paper type.
Paper Size	Select the paper size.

9. Press [Start].

Related Information

- Print Photos from Media on the Brother Machine

Print Photos with Auto Cropping

Related Models: DCP-J572DW/DCP-J772DW/MFC-J690DW/MFC-J890DW

If your photo is too long or too wide to fit the space in your layout, part of the image will be cropped.

- The factory setting is On. To print the whole image, change this setting to Off.
- If you set the [Cropping] setting to Off, set the [Borderless] setting to Off, also.

Cropping: On

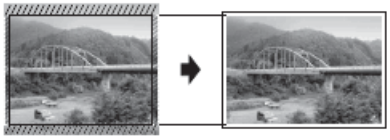

Cropping: Off

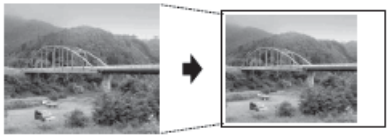

>> DCP-J572DW
>> DCP-J772DW/MFC-J690DW/MFC-J890DW

DCP-J572DW

1. Open the media slot cover.
2. Put the media in the slot.
3. Press ▲ or ▼ to select [JPEG Print]. Press **OK**.
4. Press ▲ or ▼ to select [Select Files]. Press **OK**.
5. Press ◀ or ▶ to display the photo you want to print.
6. Press **+** or **-** on the control panel repeatedly to enter the number of copies you want.
7. Press **OK**.
8. Press ▲ or ▼ to select the following:
   a. Select [Cropping]. Press **OK**.
   b. Select [On] (or [Off]). Press **OK**.
9. Press **Colour Start**.

DCP-J772DW/MFC-J690DW/MFC-J890DW

1. Open the media slot cover.
2. Put the memory card or USB flash drive in the correct slot.
3. Press [Photo] > [Select Files].
4. Press ◀ or ▶ to display each photo. When the photo you want appears, press it, and then press [OK].
5. Press [OK].
6. Press [Print Settings] > [Cropping].
7. Press [On] (or [Off]).
8. When finished, press or [OK].
9. Press [Start].

Related Information

- Print Photos from Media on the Brother Machine
- Other Problems

Print Borderless Photos from Media

Related Models: DCP-J572DW/DCP-J772DW/MFC-J690DW/MFC-J890DW

This feature expands the printable area to the edges of the paper. Printing time will be slower.

>> DCP-J572DW
>> DCP-J772DW/MFC-J690DW/MFC-J890DW

DCP-J572DW

1. Open the media slot cover.
2. Put the media in the slot.
3. Press ▲ or ▼ to select `[JPEG Print]`. Press **OK**.
4. Press ▲ or ▼ to select `[Select Files]`. Press **OK**.
5. Press ◀ or ▶ to display the photo you want to print.
6. Press **+** or **-** on the control panel repeatedly to enter the number of copies you want.
7. Press **OK**.
8. Press ▲ or ▼ to select the following:
   a. Select `[Borderless]`. Press **OK**.
   b. Select `[On]` (or `[Off]`). Press **OK**.
9. Press **Colour Start**.

DCP-J772DW/MFC-J690DW/MFC-J890DW

1. Open the media slot cover.
2. Put the memory card or USB flash drive in the correct slot.
3. Press `[Photo]` > `[Select Files]`.
4. Press ◀ or ▶ to display each photo. When the photo you want appears, press it, and then press `[OK]`.
5. Press `[OK]`.
6. Press `[Print Settings]` > `[Borderless]`.
7. Press `[On]` (or `[Off]`).
8. When finished, press or `[OK]`.
9. Press `[Start]`.

Related Information

- Print Photos from Media on the Brother Machine
- Other Problems

Print the Date from Your Photo's Data

Related Models: DCP-J572DW/DCP-J772DW/MFC-J690DW/MFC-J890DW

Print the date if it is already in your photo's information. The date will be printed on the lower-right corner. To use this setting, the photo must include the date.

>> DCP-J572DW
>> DCP-J772DW/MFC-J690DW/MFC-J890DW

DCP-J572DW

1. Open the media slot cover.
2. Put the media in the slot.
3. Press ▲ or ▼ to select `[JPEG Print]`. Press **OK**.
4. Press ▲ or ▼ to select `[Select Files]`. Press **OK**.
5. Press ◀ or ▶ to display the photo you want to print.
6. Press **+** or **-** on the control panel repeatedly to enter the number of copies you want.
7. Press **OK**.
8. Press ▲ or ▼ to select the following:
   a. Select `[Date Print]`. Press **OK**.
   b. Select `[On]` (or `[Off]`). Press **OK**.
9. Press **Colour Start**.

DCP-J772DW/MFC-J690DW/MFC-J890DW

1. Open the media slot cover.
2. Put the memory card or USB flash drive in the correct slot.
3. Press `[Photo]` > `[Select Files]`.
4. Press ◀ or ▶ to display each photo. When the photo you want appears, press it, and then press `[OK]`.
5. Press `[OK]`.
6. Press `[Print Settings]` > `[Date Print]`.
7. Press `[On]` (or `[Off]`).
8. When finished, press or `[OK]`.
9. Press `[Start]`.

Related Information

- Print Photos from Media on the Brother Machine

Print Settings for Photos

Related Models: DCP-J572DW/DCP-J772DW/MFC-J690DW/MFC-J890DW

DCP-J572DW

Option	Description
Print Quality	Select the print resolution for your type of document. When you select the Inkjet Paper option in the Paper Type setting, you can select only Fine.
Paper Type	Select the paper type.
Paper Size	Select the paper size.
Print Layout	Select the print layout.
Brightness	Adjust the brightness.
Contrast	Adjust the contrast. Increasing the contrast will make an image look sharper and more vivid.
Cropping	Crop the image around the margin to fit the paper size or print size. Turn this feature off when you want to print whole images or prevent unwanted cropping.
Borderless	Expand the printable area to fit the edges of the paper.
Date Print	Print the date on your photo.
Set New Default	Save the print settings you use most often by setting them as the defaults.
Factory Reset	Restore any changed print settings back to the factory settings.

DCP-J772DW/MFC-J690DW/MFC-J890DW

Press the [Print Settings] option to display the settings shown in the table.

Option	Description
Print Quality	Select the print resolution for your type of document. When you select the Inkjet Paper option in the Paper Type setting, you can select only Fine.
Paper Type	Select the paper type.
Paper Size	Select the paper size.
Print Layout	Select the print layout.
Brightness	Adjust the brightness.
Contrast	Adjust the contrast. Increasing the contrast will make an image look sharper and more vivid.
Cropping	Crop the image around the margin to fit the paper size or print size. Turn this feature off when you want to print whole images or prevent unwanted cropping.
Borderless	Expand the printable area to fit the edges of the paper.
Date Print	Print the date on your photo.

Option	Description
Set New Default	Save the print settings you use most often by setting them as the defaults.
Factory Reset	Restore any changed print settings back to the factory settings.

Related Information

- Print Photos from Media on the Brother Machine
- Preview and Print Photos from Media
- Print Photos by Image Number

Copy Photos from Media to a Computer

If you would like to copy photos stored in a memory card or USB flash drive to a folder on your computer, follow the steps for your connection type and Operating System.

- Before Copying Photos
- Copy Photos from Media Over a Local Connection

Before Copying Photos

Related Models: DCP-J572DW/DCP-J772DW/MFC-J690DW/MFC-J890DW

IMPORTANT

DO NOT start your computer with a memory card or USB flash drive in the media drive of the machine. You could lose your data or damage the media.

- The machine will read only the media that was put in first.
- While the machine is printing photos from the media, your computer cannot access the photo printing for any other operation.

Related Information

- Copy Photos from Media to a Computer

Copy Photos from Media Over a Local Connection

Related Models: DCP-J572DW/DCP-J772DW/MFC-J690DW/MFC-J890DW

You can copy photos from media to your computer when it is locally connected (via USB) to your machine.

1. Open the machine's media slot cover.
2. Insert a memory card or USB flash drive into your machine.
3. Do one of the following:
   - (Windows)

     In Windows Explorer, double-click the **Removable Disk** icon.
   - (Mac)

     Double-click the removable disk icon.

   If you create a name for the volume label of the media, this name appears.

   The files and folders on the media appear on your computer screen.
4. You can edit a file and save it to another drive on your computer.
5. Quit all applications that are running stored data on the media.
6. Do one of the following:
   - (Windows)

     In Windows Explorer, right-click the removable disk icon and select **Eject**.
   - (Mac)

     Drag the removable disk icon into the **Trash** icon.
7. Wait until your Brother machine has stopped accessing the media before removing the media.

IMPORTANT

DO NOT remove the media while your Brother machine is accessing the media. Otherwise, the media, or data stored on the media could be damaged.

If you remove the media while your Brother machine is accessing the media, you must restart your computer before inserting the same media into the machine. If you do not restart your computer, the data on your media could be destroyed.

Related Information

- Copy Photos from Media to a Computer

Print Photos from ControlCenter4 (Windows)

You can print and edit photos using various ControlCenter features.

1. Make sure you have loaded the correct media in the paper tray.

IMPORTANT

- We recommend using the photo paper tray located on the top of the output tray cover to print on Photo (10 x 15 cm) and Photo L (9 x 13 cm) paper. (Available only for certain models)
- For best results, use Brother paper.
- When you print on Brother photo paper, load one extra sheet of the same photo paper in the paper tray.

2. Click the (**ControlCenter4**) icon in the task tray, and then click **Open**.
3. Do one of the following:
   - If you are using **Advanced Mode**, click the **Photo** tab, and then click the **Photo Print** button.
   - If you are using **Home Mode**, click the **Photo** tab.

4. Select the folder that contains the image you want to print.

Option	Description
My CC4 Folder	The My CC4 Folder button lets you open the ControlCenter4 folder located in the My Pictures folder on your computer.
Desktop	The Desktop button lets you open the folder tree from your desktop to select images you want to print.

5. Select images you want to print, by selecting the check box under the thumbnail in the image viewer.

Option	Description
Select All	Selects all thumbnails in the current view.
Deselect All	Deselects all thumbnails in the current view.

6. Specify the number of copies you want to print (1-99) by clicking .
7. To trim the photo before printing, click **Edit**.
8. Click **Print**.

   The print settings window appears.
9. Configure the settings for the **Paper Size**, **Media Type**, and **Layout** options.

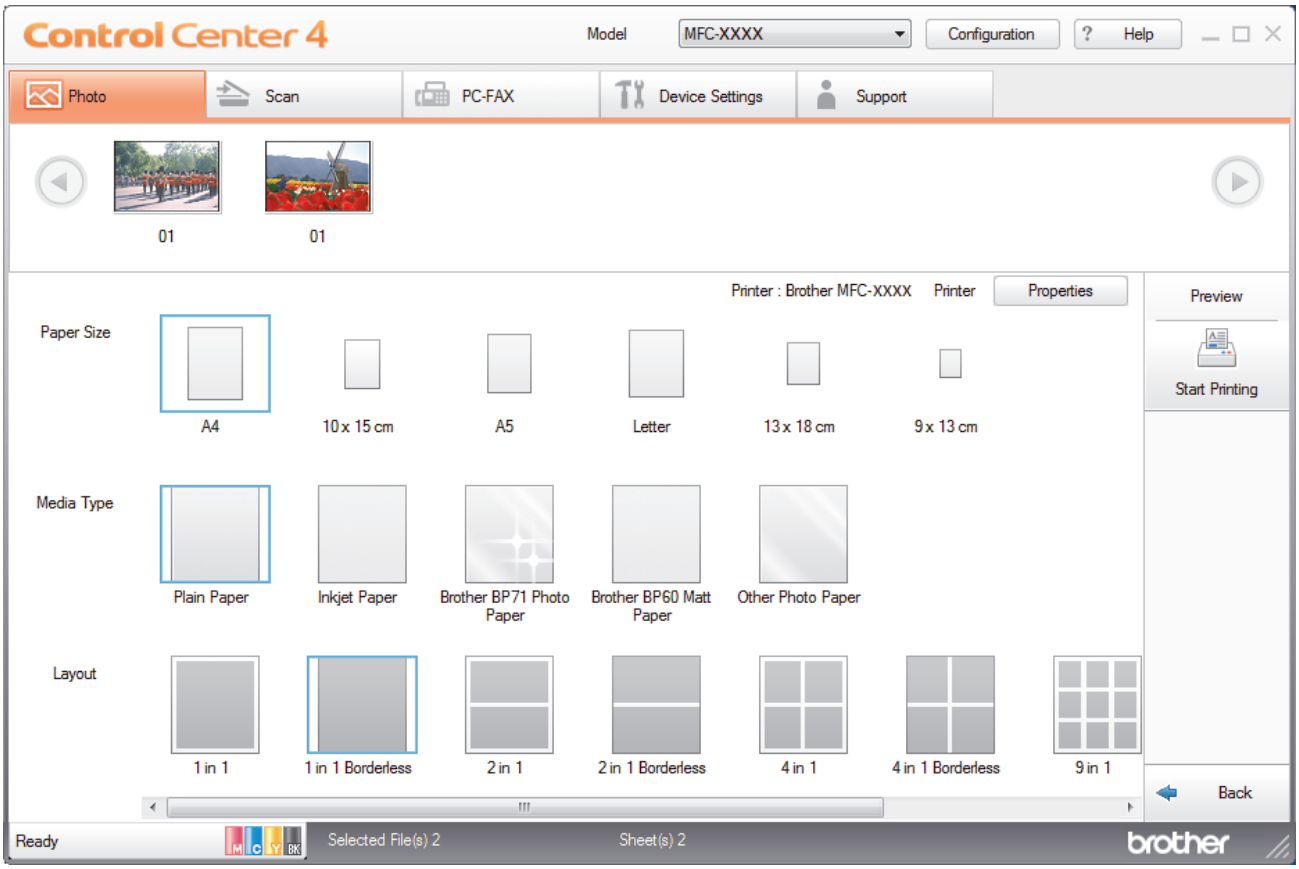

10. Click the **Properties** button to configure the **Print Quality**, **Colour / Greyscale** and **Colour Mode** options, if needed. To print the image's timestamp in the lower-right corner of the image, select the **Print Date** check box.
11. To change other printer settings, click the **Print Options...** button. (For Advanced Mode only)
12. Click **OK**.
13. Click the **Preview** button to view the image on screen before printing.
14. Click the **Start Printing** button.

Related Information

- PhotoCapture Center
- Edit Photos Using ControlCenter4 (Windows)

Edit Photos Using ControlCenter4 (Windows)

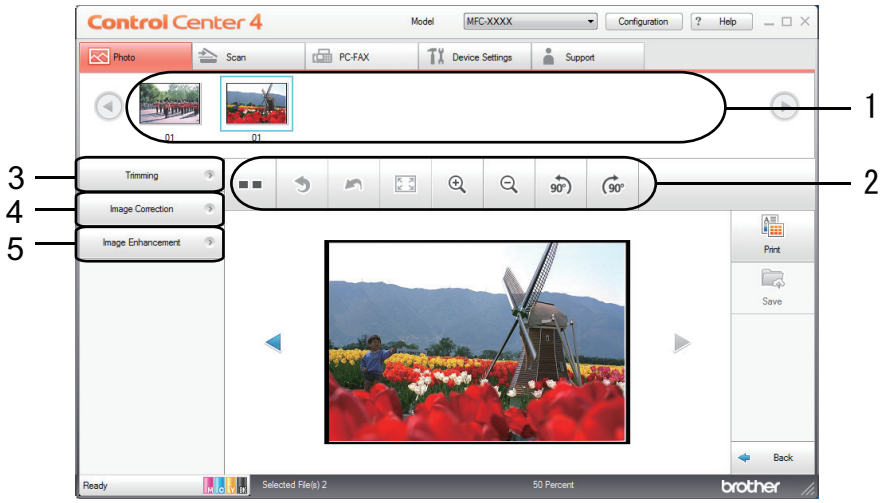

1. This area shows which images are currently selected, and how many copies of each image will be printed.
2. These buttons allow you to control how you view the selected image.

Buttons	Description
(**Compare**)	Compare the edited image with the original.
(**Undo**)	Cancel the last edit applied to the selected image.
(**Restart**)	Cancel all the edits applied to the selected image. The edited image reverts to its original state.
(**Fit to Window**)	Set the zoom level so that the image fits the window.
(**Zoom In/Zoom Out**)	Enlarge or reduce the selected image.
(**Rotate Counterclockwise/Rotate Clockwise**)	Rotate the image by 90 degrees, clockwise or counter-clockwise.
(Previous/Next)	Display the previous or next image.

3. **Trimming**

   This feature allows you to remove unwanted areas from your photos.

4. **Image Correction**

   Auto Correction

   Select this option to apply a range of automatic corrections that can enhance an image.

   Red-Eye Removal

   Select this option to correct red eye in photo images, which is sometimes caused by a camera's flash.

   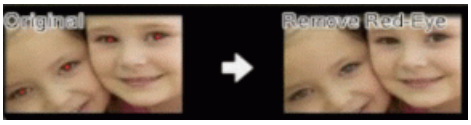

   Monochrome

   Select this option to remove colour information from the image.

   Sepia

   Select this option to remove colour information from the image and add a sepia tone.

5. **Image Enhancement**

Nature Scene

Select this option to enhance natural colours, such as green and blue.

Night Scene

Select this option to optimise the image adjustments for a night scene photo.

Soft Light

Select this option to soften bright edges.

Related Information

- Print Photos from ControlCenter4 (Windows)

Network

- Supported Basic Network Features
- Network Management Software and Utilities
- Additional Methods of Configuring Your Brother Machine for a Wireless Network
- Advanced Network Features
- Technical Information for Advanced Users

Supported Basic Network Features

The print server supports various features depending on the operating system. Use this table to see which network features and connections are supported by each operating system.

Operating Systems	Windows 7 Windows 8 Windows 10	Windows Server 2008/2012/2012 R2/2016	macOS v10.10.5 macOS v10.11.x macOS v10.12.x
Printing	Yes	Yes	Yes
Scanning	Yes		Yes
PC Fax Send (Available only for certain models) [1]	Yes		Yes
PC Fax Receive (Available only for certain models) [1]	Yes		
BRAdmin Light [2]	Yes	Yes	
BRAdmin Professional [3]	Yes	Yes	
Remote Setup (Available only for certain models) [1]	Yes		
Status Monitor	Yes		Yes
Driver Deployment Wizard	Yes	Yes	

Related Information

- Network

1 Not available for DCP models.

2 BRAdmin Light is available as a download from your model's page at support.brother.com.

3 BRAdmin Professional is available as a download from your model's page at support.brother.com.

Network Management Software and Utilities

Configure and change your Brother machine's network settings using a management utility.

- Learn about Network Management Software and Utilities
- Change Machine Settings from Your Computer

Learn about Network Management Software and Utilities

BRAdmin Light (Windows)

BRAdmin Light is a utility for the initial setup of Brother network-connected devices. This utility can search for Brother products on your network, view the status and configure the basic network settings, such as IP address.

Go to your model's **Downloads** page on the Brother Solutions Center at support.brother.com to download BRAdmin Light.

- If using Windows Firewall, or the firewall function of an anti-spyware or antivirus application, temporarily disable them. When you are sure you can print, configure the software settings following the instructions.

BRAdmin Professional (Windows)

BRAdmin Professional is a utility for more advanced management of network-connected Brother devices. This utility can search for Brother products on your network and view the device status from an easy-to-read Windows Explorer-style screen that changes colour to identify the status of each device. You can configure network and device settings, and update device firmware from a Windows computer on your LAN. BRAdmin Professional can also log activity of Brother devices on your network and export the log data.

- Go to your model's **Downloads** page on the Brother Solutions Center at support.brother.com to download the latest version of Brother's BRAdmin Professional utility.
- Node name: The node name appears in the current BRAdmin Professional window. The default node name is "BRNxxxxxxxxxxxx" for a wired network or "BRWxxxxxxxxxxxx" for a wireless network (where "xxxxxxxxxxxx" is your machine's MAC Address / Ethernet address).
- If using Windows Firewall, or the firewall function of an anti-spyware or antivirus application, temporarily disable them. When you are sure you can print, configure the software settings following the instructions.

Remote Setup (Windows and Mac) (MFC-J491DW/MFC-J690DW/MFC-J890DW)

Remote Setup is a program for configuring many machine and network settings from either a Windows or a Mac application. When you start this application, the settings on your machine are automatically downloaded to your computer and displayed on your computer screen. If you change the settings, you can upload them directly to the machine.

Windows

This utility can be used with either a USB or a network connection.

Mac

- Go to your model's **Downloads** page on the Brother Solutions Center at support.brother.com to download the Remote Setup.
- This utility can be used with a USB connection.

Related Information

- Network Management Software and Utilities

Additional Methods of Configuring Your Brother Machine for a Wireless Network

To connect your machine to your wireless network, we recommend using the Brother installation disc.

- Before Configuring Your Brother Machine for a Wireless Network
- Configure Your Machine for a Wireless Network Using the One Push Method of Wi-Fi Protected Setup™ (WPS)
- Configure Your Machine for a Wireless Network Using the PIN Method of Wi-Fi Protected Setup™ (WPS)
- Configure Your Machine for a Wireless Network When the SSID is Not Broadcast
- Use Wi-Fi Direct®

Before Configuring Your Brother Machine for a Wireless Network

Before attempting to configure a wireless network, confirm the following:

- To achieve optimum results with normal everyday document printing, place the Brother machine as close to the wireless LAN access point/router as possible with minimal obstructions. Large objects and walls between the two devices and interference from other electronic devices can affect the data transfer speed of your documents.

  Due to these factors, wireless may not be the best method of connection for all types of documents and applications. If you are printing large files, such as multi-page documents with mixed text and large graphics, you may want to consider selecting wired Ethernet for faster data transfer (supported models only), or USB for the fastest throughput speed.
- Although the Brother machine can be used in both a wired and wireless network (supported models only), only one connection method can be used at a time. However, a wireless network connection and Wi-Fi Direct connection, or a wired network connection (supported models only) and Wi-Fi Direct connection can be used at the same time.

If you do not know the security information (for example, Network Name (SSID) and Network Key), consult the router manufacturer, your system administrator, or your Internet provider.

Related Information

- Additional Methods of Configuring Your Brother Machine for a Wireless Network

Configure Your Machine for a Wireless Network Using the One Push Method of Wi-Fi Protected Setup™ (WPS)

If your wireless access point/router supports WPS (Push Button Configuration), you can use WPS from your machine's control panel menu to configure your wireless network settings.

Routers or access points that support WPS are marked with this symbol:

>> DCP-J572DW/MFC-J491DW
>> DCP-J772DW/MFC-J690DW/MFC-J890DW

DCP-J572DW/MFC-J491DW

1. Press **Settings**.
2. Press ▲ or ▼ to select the following:
   a. Select `[Network]`. Press **OK**.
   b. Select `[WLAN]`. Press **OK**.
   c. Select `[WPS]`. Press **OK**.
3. When `[Enable WLAN?]` appears, press ▶.
   The wireless setup wizard starts. To cancel, press ◀.
4. When the LCD instructs you to start WPS, press the WPS button on your wireless access point/router. Then press ▶ on your machine. Your machine automatically tries to connect to your wireless network.

If your wireless device is connected successfully, the machine's LCD displays `[Connected]`.

You have completed the wireless network setup. To install the **Full Driver & Software Package** necessary for operating your machine, insert the Brother installation disc into your computer, or go to your model's **Downloads** page on the Brother Solutions Center at support.brother.com.

DCP-J772DW/MFC-J690DW/MFC-J890DW

1. Press `[Settings]` > `[All Settings]` > `[Network]` > `[WLAN]` > `[WPS]`.
2. When `[Enable WLAN?]` appears, press `[Yes]`.
   The wireless setup wizard starts. To cancel, press `[No]`.
3. When the touchscreen instructs you to start WPS, press the WPS button on your wireless access point/router. Then press `[OK]` on your machine. Your machine automatically tries to connect to your wireless network.

If your wireless device is connected successfully, the LCD displays `[Connected]`.

You have completed the wireless network setup. To install the **Full Driver & Software Package** necessary for operating your machine, insert the Brother installation disc into your computer, or go to your model's **Downloads** page on the Brother Solutions Center at support.brother.com.

Related Information

- Additional Methods of Configuring Your Brother Machine for a Wireless Network

Configure Your Machine for a Wireless Network Using the PIN Method of Wi-Fi Protected Setup™ (WPS)

If your wireless LAN access point/router supports WPS, you can use the Personal Identification Number (PIN) Method to configure your wireless network settings.

The PIN Method is one of the connection methods developed by the Wi-Fi Alliance®. By submitting a PIN created by an Enrollee (your machine) to the Registrar (a device that manages the wireless LAN), you can set up the wireless network and security settings. For more information on how to access WPS mode, see the instructions provided with your wireless access point/router.

Type A

Connection when the wireless LAN access point/router (1) doubles as the Registrar.

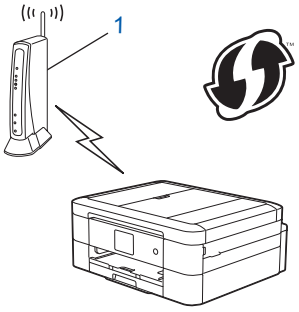

Type B

Connection when another device (2), such as a computer, is used as the Registrar.

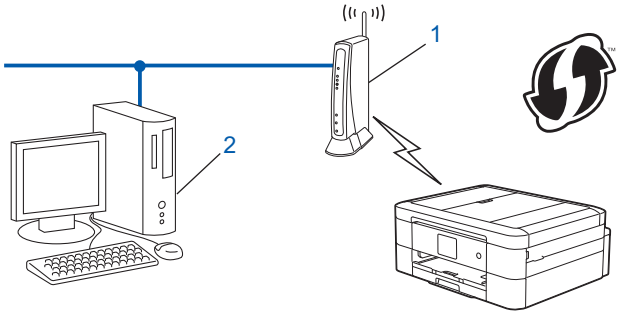

Routers or access points that support WPS are marked with this symbol:

>> DCP-J572DW/MFC-J491DW
>> DCP-J772DW/MFC-J690DW/MFC-J890DW

DCP-J572DW/MFC-J491DW

1. Press **Settings**.
2. Press ▲ or ▼ to select the following:
   a. Select `[Network]`. Press **OK**.
   b. Select `[WLAN]`. Press **OK**.
   c. Select `[WPS w/PIN Code]`. Press **OK**.

3. When [Enable WLAN?] appears, press ▶.

   The wireless setup wizard starts. To cancel, press ◀.
4. The LCD displays an eight-digit PIN and the machine starts searching for a wireless LAN access point/router.
5. Using a computer connected to the network, in your browser's address bar, type the IP address of the device you are using as the Registrar. (For example: http://192.168.1.2)
6. Go to the WPS settings page and type the PIN, and then follow the on-screen instructions.

- The Registrar is usually the wireless LAN access point/router.
- The settings page will differ depending on the brand of wireless LAN access point/router. For more information, see the instructions supplied with your wireless LAN access point/router.

If you are using a Windows 7, Windows 8, or Windows 10 computer as a Registrar, complete the following steps:

7. Do one of the following:
   - Windows 7

     Click **(Start)** > **Devices and Printers** > **Add a device**.
   - Windows 8

     Move your mouse to the lower right corner of your desktop. When the menu bar appears, click **Settings** > **Control Panel** > **Hardware and Sound** > **Devices and Printers** > **Add a device**.
   - Windows 10

     Click > **Windows System** > **Control Panel**. In the **Hardware and Sound** group, click **Add a device**.

- To use a Windows 7, Windows 8, or Windows 10 computer as a Registrar, you must register it to your network in advance. For more information, see the instructions supplied with your wireless LAN access point/router.
- If you use Windows 7, Windows 8, or Windows 10 as a Registrar, you can install the printer driver after the wireless configuration by following the on-screen instructions. To install the **Full Driver & Software Package** necessary for operating your machine, insert the Brother installation disc into your computer or go to your model's **Downloads** page on the Brother Solutions Center at support.brother.com.

8. Select your machine and click **Next**.
9. Type the PIN displayed on the machine's LCD, and then click **Next**.
10. (Windows 7) Select your network, and then click **Next**.
11. Click **Close**.

DCP-J772DW/MFC-J690DW/MFC-J890DW

1. Press [Settings] > [All Settings] > [Network] > [WLAN] > [WPS w/ PIN Code].
2. When [Enable WLAN?] appears, press [Yes].

   The wireless setup wizard starts. To cancel, press [No].
3. The LCD displays an eight-digit PIN and the machine starts searching for a wireless LAN access point/router.
4. Using a computer connected to the network, in your browser's address bar, type the IP address of the device you are using as the Registrar. (For example: http://192.168.1.2)
5. Go to the WPS settings page and type the PIN, and then follow the on-screen instructions.

- The Registrar is usually the wireless LAN access point/router.
- The settings page will differ depending on the brand of wireless LAN access point/router. For more information, see the instructions supplied with your wireless LAN access point/router.

If you are using a Windows 7, Windows 8, or Windows 10 computer as a Registrar, complete the following steps:

6. Do one of the following:

- Windows 7

  Click **(Start)** > **Devices and Printers** > **Add a device**.

- Windows 8

  Move your mouse to the lower right corner of your desktop. When the menu bar appears, click **Settings** > **Control Panel** > **Hardware and Sound** > **Devices and Printers** > **Add a device**.

- Windows 10

  Click > **Windows System** > **Control Panel**. In the **Hardware and Sound** group, click **Add a device**.

- To use a Windows 7, Windows 8, or Windows 10 computer as a Registrar, you must register it to your network in advance. For more information, see the instructions supplied with your wireless LAN access point/router.
- If you use Windows 7, Windows 8, or Windows 10 as a Registrar, you can install the printer driver after the wireless configuration by following the on-screen instructions. To install the **Full Driver & Software Package** necessary for operating your machine, insert the Brother installation disc into your computer or go to your model's **Downloads** page on the Brother Solutions Center at support.brother.com.

7. Select your machine and click **Next**.
8. Type the PIN displayed on the machine's LCD, and then click **Next**.
9. (Windows 7) Select your network, and then click **Next**.
10. Click **Close**.

Related Information

- Additional Methods of Configuring Your Brother Machine for a Wireless Network

Configure Your Machine for a Wireless Network When the SSID is Not Broadcast

>> DCP-J572DW/MFC-J491DW
>> DCP-J772DW/MFC-J690DW/MFC-J890DW

DCP-J572DW/MFC-J491DW

Before configuring your machine, we recommend writing down your wireless network settings. You will need this information before you continue with the configuration.

1. Check and write down the current wireless network settings.

Network Name (SSID)

Communication Mode	Authentication Method	Encryption Mode	Network Key
Infrastructure	Open System	NONE	-
		WEP	
	Shared Key	WEP	
	WPA/WPA2-PSK	AES	
		TKIP	

For example:

Network Name (SSID)
HELLO

Communication Mode	Authentication Method	Encryption Mode	Network Key
Infrastructure	WPA2-PSK	AES	12345678

If your router uses WEP encryption, enter the key used as the first WEP key. Your Brother machine supports the use of the first WEP key only.

2. Press **Settings**.
3. Press ▲ or ▼ to select the following:
   a. Select `[Network]`. Press **OK**.
   b. Select `[WLAN]`. Press **OK**.
   c. Select `[Setup Wizard]`, and then press **OK**.
4. When `[Enable WLAN?]` appears, press ▶.

   The wireless setup wizard starts. To cancel, press ◀.
5. The machine will search for your network and display a list of available SSIDs. Press ▲ or ▼ to select the `[<New SSID>]` option, and then press **OK**.
6. Enter the SSID name, and then press **OK**.

For more information about how to enter text, see the *Appendix*.

7. Select `[Infrastructure]`, and then press **OK**.
8. Select the Authentication Method, and then press **OK**.
9. Do one of the following:

- If you selected the [Open System] option, press ▲ or ▼ to select the Encryption type [None] or [WEP], and then press **OK**.

  If you selected the [WEP] option for Encryption type, enter the WEP key, and then press **OK**.
- If you selected the [Shared Key] option, enter the WEP key, and then press **OK**.
- If you selected the [WPA/WPA2-PSK] option, press ▲ or ▼ to select the Encryption type [TKIP+AES] or [AES], and then press **OK**.

  Enter the WPA key, and then press **OK**.

- For more information about how to enter text, see the *Appendix*.
- Your Brother machine supports the use of the first WEP key only.

10. The machine attempts to connect to the wireless device you have selected.

If your wireless device is connected successfully, the machine's LCD displays [Connected].

You have completed the wireless network setup. To install the **Full Driver & Software Package** necessary for operating your machine, insert the Brother installation disc into your computer, or go to your model's **Downloads** page on the Brother Solutions Center at support.brother.com.

DCP-J772DW/MFC-J690DW/MFC-J890DW

Before configuring your machine, we recommend writing down your wireless network settings. You will need this information before you continue with the configuration.

1. Check and write down the current wireless network settings.

Network Name (SSID)

Communication Mode	Authentication Method	Encryption Mode	Network Key
Infrastructure	Open System	NONE	-
		WEP	
	Shared Key	WEP	
	WPA/WPA2-PSK	AES	
		TKIP	

For example:

Network Name (SSID)
HELLO

Communication Mode	Authentication Method	Encryption Mode	Network Key
Infrastructure	WPA2-PSK	AES	12345678

If your router uses WEP encryption, enter the key used as the first WEP key. Your Brother machine supports the use of the first WEP key only.

2. Press [Settings] > [All Settings] > [Network] > [WLAN] > [Setup Wizard].
3. When [Enable WLAN?] appears, press [Yes].

   The wireless setup wizard starts. To cancel, press [No].
4. The machine searches for your network and displays a list of available SSIDs. Press ▲ or ▼ to display the [<New SSID>] option, and then press it.
5. Press [OK].
6. Enter the SSID name, and then press [OK].

For more information about how to enter text, see the *Appendix*.

7. Press [Infrastructure].
8. Select the Authentication Method, and then press it.
9. Do one of the following:
   - If you selected the [Open System] option, press either [None] or [WEP].
     If you selected the [WEP] option for Encryption type, enter the WEP key, and then press [OK].
   - If you selected the [Shared Key] option, enter the WEP key, and then press [OK].
   - If you selected the [WPA/WPA2-PSK] option, press either [TKIP+AES] or [AES].
     Enter the WPA key, and then press [OK].

- For more information about how to enter text, see the *Appendix*.
- Your Brother machine supports the use of the first WEP key only.

10. The machine attempts to connect to the wireless device you have selected.

If your wireless device is connected successfully, the LCD displays [Connected].

You have completed the wireless network setup. To install the **Full Driver & Software Package** necessary for operating your machine, insert the Brother installation disc into your computer, or go to your model's **Downloads** page on the Brother Solutions Center at support.brother.com.

Related Information

- Additional Methods of Configuring Your Brother Machine for a Wireless Network
- I Cannot Complete the Wireless Network Setup Configuration

Use Wi-Fi Direct®

- Print or Scan from Your Mobile Device Using Wi-Fi Direct
- Configure Your Wi-Fi Direct Network
- I Cannot Complete the Wireless Network Setup Configuration

Print or Scan from Your Mobile Device Using Wi-Fi Direct

Wi-Fi Direct is one of the wireless configuration methods developed by the Wi-Fi Alliance®. It allows you to configure a secured wireless network between your Brother machine and a mobile device, such as an Android™ device, Windows device, iPhone, iPod touch, or iPad, without using an access point. Wi-Fi Direct supports wireless network configuration using the one-push or PIN Method of Wi-Fi Protected Setup™ (WPS). You can also configure a wireless network by manually setting a SSID and password. Your Brother machine's Wi-Fi Direct feature supports WPA2™ security with AES encryption.

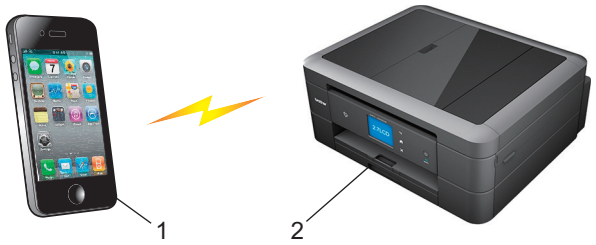

1. Mobile device
2. Your Brother machine

- Although the Brother machine can be used in both a wired (supported models only) and wireless network, only one connection method can be used at a time. However, a wireless network connection and Wi-Fi Direct connection, or a wired network connection and Wi-Fi Direct connection can be used at the same time.
- The Wi-Fi Direct supported device can become a Group Owner (G/O). When configuring the Wi-Fi Direct network, the Group Owner (G/O) serves as an access point.

Related Information

- Use Wi-Fi Direct®

Configure Your Wi-Fi Direct Network

Configure your Wi-Fi Direct network settings from your machine's control panel.

- Wi-Fi Direct Network Configuration Overview
- Configure Your Wi-Fi Direct Network Using the One-Push Method
- Configure Your Wi-Fi Direct Network Using the One-Push Method of Wi-Fi Protected Setup™ (WPS)
- Configure Your Wi-Fi Direct Network Using the PIN Method
- Configure Your Wi-Fi Direct Network Using the PIN Method of Wi-Fi Protected Setup™ (WPS)
- Configure Your Wi-Fi Direct Network Manually

Wi-Fi Direct Network Configuration Overview

The following instructions offer five methods for configuring your Brother machine in a wireless network environment. Select the method you prefer for your environment.

Check your mobile device for configuration.

1. Does your mobile device support Wi-Fi Direct?

Option	Description
Yes	Go to Step 2
No	Go to Step 3

2. Does your mobile device support one-push configuration for Wi-Fi Direct?

Option	Description
Yes	See *Related Information*: Configure Your Wi-Fi Direct Network Using the One-Push Method
No	See *Related Information*: Configure Your Wi-Fi Direct Network Using the PIN Method

3. Does your mobile device support Wi-Fi Protected Setup™ (WPS)?

Option	Description
Yes	Go to Step 4
No	See *Related Information*: Configure Your Wi-Fi Direct Network Manually

4. Does your mobile device support one-push configuration for Wi-Fi Protected Setup™ (WPS)?

Option	Description
Yes	See *Related Information*: Configure Your Wi-Fi Direct Network Using the One-Push Method of Wi-Fi Protected Setup™ (WPS)
No	See *Related Information*: Configure Your Wi-Fi Direct Network Using the PIN Method of Wi-Fi Protected Setup™ (WPS)

To use Brother iPrint&Scan functionality in a Wi-Fi Direct network configured by one-push configuration using Wi-Fi Direct or by PIN Method configuration using Wi-Fi Direct, the device you use to configure Wi-Fi Direct must be running Android™ 4.0 or greater.

Related Information

- Configure Your Wi-Fi Direct Network
- Configure Your Wi-Fi Direct Network Using the One-Push Method
- Configure Your Wi-Fi Direct Network Using the PIN Method
- Configure Your Wi-Fi Direct Network Manually
- Configure Your Wi-Fi Direct Network Using the One-Push Method of Wi-Fi Protected Setup™ (WPS)
- Configure Your Wi-Fi Direct Network Using the PIN Method of Wi-Fi Protected Setup™ (WPS)

Configure Your Wi-Fi Direct Network Using the One-Push Method

>> DCP-J572DW/MFC-J491DW
>> DCP-J772DW/MFC-J690DW/MFC-J890DW

DCP-J572DW/MFC-J491DW

If your mobile device supports Wi-Fi Direct, follow these steps to configure a Wi-Fi Direct network:

When the machine receives the Wi-Fi Direct request from your mobile device, the message `[Wi-Fi Direct connection request received.]` will appear on the LCD. Press ▶ to connect.

1. Press **Settings**.
2. Press ▲ or ▼ to select the following:
   a. Select `[Network]`. Press **OK**.
   b. Select `[Wi-Fi Direct]`. Press **OK**.
   c. Select `[Push Button]`. Press **OK**.
3. Activate your mobile device's WPS PIN configuration method (see your mobile device's user's guide for instructions) when `[Activate Wi-Fi Direct on other device.]` appears. Press ▶ on your Brother machine. This will start the Wi-Fi Direct setup.
4. Do one of the following:
   - When your Brother machine is the G/O (Group Owner), connect your mobile device to the machine directly.
   - When your Brother machine is not the G/O, it will display available device names with which to configure a Wi-Fi Direct network. Select the mobile device to which you want to connect and press **OK**. Search for available devices again by selecting `[Rescan]`.
5. If your mobile device connects successfully, the machine displays `[Connected]`. You have completed the Wi-Fi Direct network setup.

DCP-J772DW/MFC-J690DW/MFC-J890DW

If your mobile device supports Wi-Fi Direct, follow these steps to configure a Wi-Fi Direct network:

When the machine receives the Wi-Fi Direct request from your mobile device, the message `[Wi-Fi Direct connection request received. Press [OK] to connect.]` will appear on the LCD. Press `[OK]` to connect.

1. Press `[Settings]` > `[All Settings]` > `[Network]` > `[Wi-Fi Direct]` > `[Push Button]`.
2. Activate Wi-Fi Direct on your mobile device (see your mobile device's user's guide for instructions) when `[Activate Wi-Fi Direct on other device. Then Press [OK].]` appears. Press `[OK]` on your Brother machine.
   This will start the Wi-Fi Direct setup.
3. Do one of the following:
   - When your Brother machine is the Group Owner (G/O), connect your mobile device to the machine directly.
   - When your Brother machine is not the Group Owner (G/O), it will display available device names with which to configure a Wi-Fi Direct network. Select the mobile device to which you want to connect. Search for available devices again by pressing `[Rescan]`.

If your mobile device connects successfully, the machine displays [Connected]. You have completed the Wi-Fi Direct network setup.

Related Information

- Configure Your Wi-Fi Direct Network
- Wi-Fi Direct Network Configuration Overview

Configure Your Wi-Fi Direct Network Using the One-Push Method of Wi-Fi Protected Setup™ (WPS)

>> DCP-J572DW/MFC-J491DW
>> DCP-J772DW/MFC-J690DW/MFC-J890DW

DCP-J572DW/MFC-J491DW

If your mobile device supports WPS (PBC; Push Button Configuration), follow these steps to configure a Wi-Fi Direct network:

When the machine receives the Wi-Fi Direct request from your mobile device, the message `[Wi-Fi Direct connection request received.]` will appear on the LCD. Press ▶ to connect.

1. Press **Settings**.
2. Press ▲ or ▼ to select the following:
   a. Select `[Network]`. Press **OK**.
   b. Select `[Wi-Fi Direct]`. Press **OK**.
   c. Select `[Group Owner]`. Press **OK**.
   d. Select `[On]`. Press **OK**.
   e. Select `[Push Button]`. Press **OK**.
3. Activate your mobile device's WPS PIN configuration method (see your mobile device's user's guide for instructions) when `[Activate Wi-Fi Direct on other device.]` appears. Press ▶ on your Brother machine. This will start the Wi-Fi Direct setup.
4. If your mobile device connects successfully, the machine displays `[Connected]`. You have completed the Wi-Fi Direct network setup.

DCP-J772DW/MFC-J690DW/MFC-J890DW

If your mobile device supports WPS (PBC; Push Button Configuration), follow these steps to configure a Wi-Fi Direct network:

When the machine receives the Wi-Fi Direct request from your mobile device, the message `[Wi-Fi Direct connection request received. Press [OK] to connect.]` will appear on the LCD. Press `[OK]` to connect.

1. Press `[Settings]` > `[All Settings]` > `[Network]` > `[Wi-Fi Direct]` > `[Group Owner]` > `[On]`.
2. Press `[Push Button]`.
3. Activate your mobile device's WPS one-push configuration method (see your mobile device's user's guide for instructions). When `[Activate Wi-Fi Direct on other device. Then Press [OK].]` appears on the machine's LCD, press `[OK]` on your machine.

   This will start the Wi-Fi Direct setup.

If your mobile device connects successfully, the machine displays `[Connected]`. You have completed the Wi-Fi Direct network setup.

Related Information

- Configure Your Wi-Fi Direct Network

- Wi-Fi Direct Network Configuration Overview

Configure Your Wi-Fi Direct Network Using the PIN Method

>> DCP-J572DW/MFC-J491DW
>> DCP-J772DW/MFC-J690DW/MFC-J890DW

DCP-J572DW/MFC-J491DW

If your mobile device supports the PIN Method of Wi-Fi Direct, follow these steps to configure a Wi-Fi Direct network:

When the machine receives the Wi-Fi Direct request from your mobile device, the message `[Wi-Fi Direct connection request received.]` will appear on the LCD. Press ▶ to connect.

1. Press **Settings**.
2. Press ▲ or ▼ to select the following:
   a. Select `[Network]`. Press **OK**.
   b. Select `[Wi-Fi Direct]`. Press **OK**.
   c. Select `[PIN Code]`. Press **OK**.
3. Activate your mobile device's WPS PIN configuration method (see your mobile device's user's guide for instructions) when `[Activate Wi-Fi Direct on other device.]` appears. Press ▶ on your Brother machine. This will start the Wi-Fi Direct setup.
4. Do one of the following:
   - When your Brother machine is the G/O (Group Owner), it will wait for a connection request from your mobile device. If the LCD prompts you to enter a PIN, enter the PIN displayed on your mobile device in the machine. Press **OK**. Follow the instructions, and then go to the next step. If the PIN is displayed on your Brother machine, enter the PIN in your mobile device.
   - When your Brother machine is not the G/O (Group Owner), it will display available device names with which to configure a Wi-Fi Direct network. Select the mobile device to which you want to connect and press **OK**. Search for available devices again by selecting `[Rescan]`.

     When `[Select PIN Method]` appears, do one of the following:

     - Press ▶ to display the PIN on your machine and enter the PIN in your mobile device. Follow the instructions, and then go to the next step.
     - Press ◀ to enter a PIN shown on your mobile device in the machine, and then press **OK**. Follow the instructions, and then go to the next step.
5. If your mobile device connects successfully, the machine displays `[Connected]`. You have completed the Wi-Fi Direct network setup.

DCP-J772DW/MFC-J690DW/MFC-J890DW

If your mobile device supports the PIN Method of Wi-Fi Direct, follow these steps to configure a Wi-Fi Direct network:

When the machine receives the Wi-Fi Direct request from your mobile device, the message `[Wi-Fi Direct connection request received. Press [OK] to connect.]` will appear on the LCD. Press `[OK]` to connect.

1. Press `[Settings]` > `[All Settings]` > `[Network]` > `[Wi-Fi Direct]` > `[PIN Code]`.
2. Activate Wi-Fi Direct on your mobile device (see your mobile device's user's guide for instructions) when `[Activate Wi-Fi Direct on other device. Then Press [OK].]` appears. Press `[OK]` on your Brother machine.

This will start the Wi-Fi Direct setup.

3. Do one of the following:
   - When your Brother machine is the Group Owner (G/O), it will wait for a connection request from your mobile device. When [PIN Code] appears, enter the PIN displayed on your mobile device in the machine. Press [OK]. Follow the instructions.

     If the PIN is displayed on your Brother machine, enter the PIN in your mobile device.
   - When your Brother machine is not the Group Owner (G/O), it will display available device names with which to configure a Wi-Fi Direct network. Select the mobile device to which you want to connect. Search for available devices again by pressing [Rescan].

     Do one of the following:
     - Press [Display PIN Code] to display the PIN on your machine and enter the PIN in your mobile device. Follow the instructions.
     - Press [Input PIN Code] to enter a PIN shown on your mobile device in the machine, and then press [OK]. Follow the instructions.

       If your mobile device does not display a PIN, press on your Brother machine. Go back to step 1 and try again.

If your mobile device connects successfully, the machine displays [Connected]. You have completed the Wi-Fi Direct network setup.

Related Information

- Configure Your Wi-Fi Direct Network
- Wi-Fi Direct Network Configuration Overview

Configure Your Wi-Fi Direct Network Using the PIN Method of Wi-Fi Protected Setup™ (WPS)

>> DCP-J572DW/MFC-J491DW
>> DCP-J772DW/MFC-J690DW/MFC-J890DW

DCP-J572DW/MFC-J491DW

If your mobile device supports the PIN Method of Wi-Fi Protected Setup™ (WPS), follow these steps to configure a Wi-Fi Direct network:

When the machine receives the Wi-Fi Direct request from your mobile device, the message `[Wi-Fi Direct connection request received.]` will appear on the LCD. Press ▶ to connect.

1. Press **Settings**.
2. Press ▲ or ▼ to select the following:
   a. Select `[Network]`. Press **OK**.
   b. Select `[Wi-Fi Direct]`. Press **OK**.
   c. Select `[Group Owner]`. Press **OK**.
   d. Select `[On]`. Press **OK**.
   e. Select `[PIN Code]`. Press **OK**.
3. Activate your mobile device's WPS PIN configuration method (see your mobile device's user's guide for instructions) when `[Activate Wi-Fi Direct on other device.]` appears. Press ▶ on your Brother machine. This will start the Wi-Fi Direct setup.
4. The machine will wait for a connection request from your mobile device. If the LCD prompts you to enter a PIN, enter the PIN displayed on your mobile device in the machine. Press **OK**.
5. If your mobile device connects successfully, the machine displays `[Connected]`. You have completed the Wi-Fi Direct network setup.

DCP-J772DW/MFC-J690DW/MFC-J890DW

If your mobile device supports the PIN Method of Wi-Fi Protected Setup™ (WPS), follow these steps to configure a Wi-Fi Direct network:

When the machine receives the Wi-Fi Direct request from your mobile device, the message `[Wi-Fi Direct connection request received. Press [OK] to connect.]` will appear on the LCD. Press `[OK]` to connect.

1. Press `[Settings]` > `[All Settings]` > `[Network]` > `[Wi-Fi Direct]` > `[Group Owner]` > `[On]` > `[PIN Code]`.
2. When `[Activate Wi-Fi Direct on other device. Then Press [OK].]` is displayed, activate your mobile device's WPS PIN configuration method (see your mobile device's user's guide for instructions), and then press `[OK]` on your Brother machine.

   This will start the Wi-Fi Direct setup.
3. The machine will wait for a connection request from your mobile device. When `[PIN Code]` appears, enter the PIN displayed on your mobile device in the machine. Press `[OK]`.

If your mobile device connects successfully, the machine displays `[Connected]`. You have completed the Wi-Fi Direct network setup.

Related Information

- Configure Your Wi-Fi Direct Network
- Wi-Fi Direct Network Configuration Overview

Configure Your Wi-Fi Direct Network Manually

>> DCP-J572DW/MFC-J491DW
>> DCP-J772DW/MFC-J690DW/MFC-J890DW

DCP-J572DW/MFC-J491DW

If your mobile device does not support Wi-Fi Direct or WPS, you must configure a Wi-Fi Direct network manually.

1. Press **Settings**.
2. Press ▲ or ▼ to select the following:
   a. Select `[Network]`. Press **OK**.
   b. Select `[Wi-Fi Direct]`. Press **OK**.
   c. Select `[Manual]`. Press **OK**.
3. The machine will display the SSID name and Password for three minutes. Go to your mobile device's wireless network settings screen and enter the SSID name and password.
4. If your mobile device connects successfully, the machine displays `[Connected]`. You have completed the Wi-Fi Direct network setup.

DCP-J772DW/MFC-J690DW/MFC-J890DW

If your mobile device does not support Wi-Fi Direct or WPS, you must configure a Wi-Fi Direct network manually.

1. Press `[Settings]` > `[All Settings]` > `[Network]` > `[Wi-Fi Direct]` > `[Manual]`.
2. The machine will display the SSID name and Password. Go to your mobile device's wireless network settings screen and enter the SSID name and password.

If your mobile device connects successfully, the machine displays `[Connected]`. You have completed the Wi-Fi Direct network setup.

Related Information

- Configure Your Wi-Fi Direct Network
- Wi-Fi Direct Network Configuration Overview

Advanced Network Features

- Print the Network Configuration Report

Print the Network Configuration Report

The Network Configuration Report lists the network configuration, including the network print server settings.

- Node Name: The Node Name appears on the current Network Configuration Report. The default Node Name is "BRNxxxxxxxxxxxx" for a wired network or "BRWxxxxxxxxxxxx" for a wireless network (where "xxxxxxxxxxxx" is your machine's MAC Address / Ethernet Address.)
- If the [IP Address] on the Network Configuration Report shows 0.0.0.0, wait for one minute and try printing it again.
- You can find your machine's settings, such as the IP address, subnet mask, node name, and MAC Address on the report, for example:
  - IP address: 192.168.0.5
  - Subnet mask: 255.255.255.0
  - Node name: BRN000ca0000499
  - MAC Address: 00-0c-a0-00-04-99

>> DCP-J572DW/MFC-J491DW
>> DCP-J772DW/MFC-J690DW/MFC-J890DW

DCP-J572DW/MFC-J491DW

1. Press **Settings**.
2. Press ▲ or ▼ to select the following:
   a. Select [Print Reports]. Press **OK**.
   b. Select [Network Config]. Press **OK**.
3. Press ▶.
   The machine prints the current Network Configuration Report.

DCP-J772DW/MFC-J690DW/MFC-J890DW

1. Press [Settings] > [All Settings] > [Print Reports] > [Network Configuration] > [Yes].
   The machine prints the current Network Configuration Report.

Related Information

- Advanced Network Features
- Where Can I Find My Brother Machine's Network Settings?
- Use the Network Connection Repair Tool (Windows)
- I Want to Check that My Network Devices are Working Correctly
- Error and Maintenance Messages

Technical Information for Advanced Users

- Reset the Network Settings to Factory Default
- Print the WLAN Report

Reset the Network Settings to Factory Default

You can use your machine's control panel to reset the print server to its default factory settings. This resets all information, such as the password and IP address.

IMPORTANT

(MFC-J491DW/MFC-J690DW)

When you reset the machine, your faxes that are stored in the machine's memory may be deleted. Before you reset the machine, you can transfer your faxes to your computer or another fax machine so you will not lose any important messages.

- This feature restores all wired (supported models only) and wireless network settings to the factory settings.
- You can also reset the print server to its factory default settings using BRAdmin Light or BRAdmin Professional.

>> DCP-J572DW/MFC-J491DW
>> DCP-J772DW/MFC-J690DW/MFC-J890DW

DCP-J572DW/MFC-J491DW

1. Press **Settings**.
2. Press ▲ or ▼ to select the following:
   a. Select `[Network]`. Press **OK**.
   b. Select `[Network Reset]`. Press **OK**.
3. Press ▶ for two seconds to confirm.
   The machine restarts.

DCP-J772DW/MFC-J690DW/MFC-J890DW

1. Press `[Settings]` > `[All Settings]` > `[Network]` > `[Network Reset]`.
2. The message confirming reset will be displayed. Press `[OK]` for two seconds.
   The machine will restart.

Related Information

- Technical Information for Advanced Users
- Transfer Your Faxes or Fax Journal Report

Print the WLAN Report

The WLAN Report reflects your machine's wireless status. If the wireless connection fails, check the error code on the printed report.

>> DCP-J572DW/MFC-J491DW
>> DCP-J772DW/MFC-J690DW/MFC-J890DW

DCP-J572DW/MFC-J491DW

1. Press **Settings**.
2. Press ▲ or ▼ to select the `[Print Reports]` option, and then press **OK**.
3. Press ▲ or ▼ to select the `[WLAN Report]` option, and then press **OK**.
4. Press ▶.

   The machine will print the WLAN Report.

If the WLAN Report does not print, check your machine for errors. If there are no visible errors, wait for one minute and then try to print the report again.

DCP-J772DW/MFC-J690DW/MFC-J890DW

1. Press `[Settings]` > `[All Settings]` > `[Print Reports]` > `[WLAN Report]` > `[Yes]`.

   The machine will print the WLAN Report.

If the WLAN Report does not print, check your machine for errors. If there are no visible errors, wait for one minute and then try to print the report again.

Related Information

- Technical Information for Advanced Users
- Wireless LAN Report Error Codes
- My Brother Machine Cannot Print, Scan, or PC-FAX Receive over the Network
- I Want to Check that My Network Devices are Working Correctly

Wireless LAN Report Error Codes

If the Wireless LAN Report shows that the connection failed, check the error code on the printed report and see the corresponding instructions in the table:

Error Code	Problem and Recommended Solutions
TS-01	The wireless setting is not activated. Change the wireless setting to ON. If a network cable is connected to your machine, disconnect it and change the wireless setting of your machine to ON.
TS-02	The wireless access point/router cannot be detected. 1. Check the following two points: • Unplug the power to your wireless access point/router, wait for 10 seconds, and then plug it back in. • If your WLAN access point/router is using MAC address filtering, confirm that the MAC address of the Brother machine is allowed in the filter. 2. If you manually entered the SSID and security information (SSID/authentication method/ encryption method/Network Key), the information may be incorrect. Reconfirm the SSID and security information and re-enter the correct information as necessary. This device does not support a 5 GHz SSID/ESSID and you must select a 2.4 GHz SSID/ ESSID. Make sure the access point/router is set to 2.4 GHz or 2.4 GHz/5 GHz mixed mode.
TS-04	The Authentication/Encryption methods used by the selected wireless access point/router are not supported by your machine. Change the authentication and encryption methods of the wireless access point/router. Your machine supports the following authentication methods: • WPA-Personal TKIP or AES • WPA2-Personal TKIP or AES • Open WEP or None (without encryption) • Shared key WEP If your problem is not solved, the SSID or network settings you entered may be incorrect. Confirm the wireless network settings.
TS-05	The security information (SSID/Network Key) is incorrect. Confirm the SSID and Network Key.
TS-06	The wireless security information (Authentication method/Encryption method/Network Key) is incorrect. Confirm the wireless security information (Authentication method/Encryption method/Network Key).
TS-07	The machine cannot detect a WLAN access point/router that has WPS enabled. If you want to connect with WPS, you must operate both your machine and the WLAN access point/router. Confirm the connection method for WPS on WLAN access point/router and try starting again. If you do not know how to operate your WLAN access point/router using WPS, see the documentation provided with your WLAN access point/router, ask the manufacturer of your WLAN access point/router, or ask your network administrator.

Error Code	Problem and Recommended Solutions
TS-08	Two or more WLAN access points that have WPS enabled are detected. • Confirm that only one WLAN access point/router within range has the WPS method active and try again. • Try again after a few minutes to avoid interference from other access points.

How to confirm wireless security information (SSID/authentication method/encryption method/Network Key) of your WLAN access point/router:

1. The Default security settings may be provided on a label attached to the WLAN access point/router. Or the manufacturer's name or model number of the WLAN access point/router may be used as the default security settings.
2. See the documentation provided with your WLAN access point/router for information on how to find the security settings.

- If the WLAN access point/router is set to not broadcast the SSID, the SSID will not automatically be detected. You will have to manually enter the SSID name.
- The Network key may also be described as the Password, Security Key or Encryption Key.

If you do not know the SSID and wireless security settings of your WLAN access point/router or how to change the configuration, see the documentation provided with your WLAN access point/router, ask the manufacturer of your access point/router or ask your Internet provider or network administrator.

Related Information

- Print the WLAN Report
- My Brother Machine Cannot Print, Scan, or PC-FAX Receive over the Network
- I Want to Check that My Network Devices are Working Correctly

Security

- Lock the Machine Settings

Lock the Machine Settings

Before turning on the machine's Access Lock, make a careful note of your password. If you forget the password, you must reset all passwords stored in the machine by contacting your administrator or Brother customer service.

- About Using Memory Security
- About Using TX Lock

About Using Memory Security

Related Models: MFC-J890DW

Memory Security lets you prevent unauthorised access to the machine.
Although you cannot schedule Delayed Faxes, any pre-scheduled Delayed Faxes will be sent.

You must turn off PC Fax Receive before you can turn on Memory Security.

While Memory Security is On, the following operations are available:

- Receiving faxes into memory (limited by memory capacity)
- Fax Forwarding (if Fax Forwarding was already On)
- Remote Retrieval (if Fax Storage was already On and your Remote Access Code was already set)

While Memory Security is On, the following operations are NOT available:

- Operation from the control panel
- Printing received faxes
- PC printing
- PC scanning
- PC Fax Receive
- Printing with NFC
- Scanning with NFC

To print the faxes in memory, you must turn off Memory Security.

Related Information

- Lock the Machine Settings
- Set the Memory Security Password
- Change the Memory Security Password
- Turn Memory Security On/Off

Set the Memory Security Password

Related Models: MFC-J890DW

Make a careful note of your password.

1. Press [Settings] > [All Settings] > [Fax] > [Miscellaneous] > [Memory Security].
2. Enter a four-digit number for the password using the touchscreen. Press [OK].
3. When the touchscreen displays [Verify], re-enter the password using the touchscreen. Press [OK].
4. Press .

Related Information

- About Using Memory Security

Change the Memory Security Password

Related Models: MFC-J890DW

1. Press [Settings] > [All Settings] > [Fax] > [Miscellaneous] > [Memory Security] > [Set Password].
2. Enter the registered four-digit number for the current password using the touchscreen. Press [OK].
3. Enter a four-digit number for a new password using the touchscreen. Press [OK].
4. When the touchscreen displays [Verify], re-enter the new password using the touchscreen. Press [OK].
5. Press .

Related Information

- About Using Memory Security

Turn Memory Security On/Off

Related Models: MFC-J890DW

1. Press [Settings] > [All Settings] > [Fax] > [Miscellaneous] > [Memory Security] > [Set Security].
2. Enter the registered four-digit password using the keyboard on the touchscreen. Press [OK].

   The machine goes offline and the touchscreen displays [Memory Security].

Turning off Memory Security:

a. Press [Unlock].

b. Enter the current four-digit password, and then press [OK].

   If you enter the wrong password, the touchscreen displays [Wrong Password] and stays offline. The machine will stay in Secure Mode until the correct password is entered.

Related Information

- About Using Memory Security

About Using TX Lock

Related Models: MFC-J491DW/MFC-J690DW

Block unauthorised data transmission to and from the machine.

TX Lock lets you prevent unauthorised access to the machine.

While TX Lock is On, the following operations are available:

- Receiving faxes
- Fax Forwarding (If Fax Forwarding was already On) (MFC-J690DW)
- Fax Storage (If Fax Storage was already On) (MFC-J690DW)
- Remote Retrieval (If Fax Storage was already On) (MFC-J690DW)
- PC-Fax Receive (If PC-Fax Receive was already On)

While the TX Lock feature is turned on, your machine will receive faxes and store them in its memory. Then, when TX Lock is turned off, the faxes will be sent to your chosen PC.

While TX Lock is On, the following operations are NOT available:

- Operation from the control panel
- PC printing
- PC scanning

Related Information

- Lock the Machine Settings
- Set the TX Lock Password
- Change the TX Lock Password
- Turn TX Lock On/Off

Set the TX Lock Password

Related Models: MFC-J491DW/MFC-J690DW

>> MFC-J491DW
>> MFC-J690DW

MFC-J491DW

1. Press **Settings**.
2. Press ▲ or ▼ to select the following:
   a. Select [Fax]. Press **OK**.
   b. Select [Miscellaneous]. Press **OK**.
   c. Select [TX Lock]. Press **OK**.
3. Enter a four-digit number for the password. Press **OK**.
4. Re-enter the password. Press **OK**.
5. Press **Stop/Exit**.

MFC-J690DW

1. Press [Settings] > [All Settings] > [Fax] > [Miscellaneous] > [TX Lock].
2. Enter a four-digit number for the password using the touchscreen. Press [OK].
3. When the touchscreen displays [Verify], re-enter the password using the touchscreen. Press [OK].
4. Press .

Related Information

- About Using TX Lock

Change the TX Lock Password

Related Models: MFC-J491DW/MFC-J690DW

>> MFC-J491DW
>> MFC-J690DW

MFC-J491DW

1. Press **Settings**.
2. Press ▲ or ▼ to select the following:
   a. Select [Fax]. Press **OK**.
   b. Select [Miscellaneous]. Press **OK**.
   c. Select [TX Lock]. Press **OK**.
   d. Select [Set Password]. Press **OK**.
3. Enter the four-digit number of the current password. Press **OK**.
4. Enter a four-digit number for the new password. Press **OK**.
5. Re-enter the new password. Press **OK**.
6. Press **Stop/Exit**.

MFC-J690DW

1. Press [Settings] > [All Settings] > [Fax] > [Miscellaneous] > [TX Lock] > [Set Password].
2. Enter the four-digit number of the current password using the touchscreen. Press [OK].
3. Enter a four-digit number for the new password using the touchscreen. Press [OK].
4. When the touchscreen displays [Verify], re-enter the new password using the touchscreen. Press [OK].
5. Press .

Related Information

- About Using TX Lock

Turn TX Lock On/Off

Related Models: MFC-J491DW/MFC-J690DW

>> MFC-J491DW
>> MFC-J690DW

MFC-J491DW

1. Press **Settings**.
2. Press ▲ or ▼ to select the following:
   a. Select `[Fax]`. Press **OK**.
   b. Select `[Miscellaneous]`. Press **OK**.
   c. Select `[TX Lock]`. Press **OK**.
   d. Select `[Set TX Lock]`. Press **OK**.
3. Enter the registered four-digit password. Press **OK**.
   The machine goes offline and the LCD displays `[TX Lock Mode]`.

Turning off TX Lock:

a. Press **Settings**.
b. Enter the current four-digit password, and then press **OK**.
   If you enter the wrong password, the LCD displays `[Wrong Password]` and stays offline. The machine will stay in TX Lock Mode until the correct password is entered.

MFC-J690DW

1. Press `[Settings]` > `[All Settings]` > `[Fax]` > `[Miscellaneous]` > `[TX Lock]` > `[Set TX Lock]`.
2. Enter the registered four-digit password using the touchscreen. Press `[OK]`.
   The machine goes offline and the touchscreen displays `[TX Lock]`.

Turning off TX Lock:

a. Press `[Unlock]`.
b. Enter the current four-digit password, and then press `[OK]`.
   If you enter the wrong password, the touchscreen displays `[Wrong Password]` and stays offline. The machine will stay in TX Lock Mode until the correct password is entered.

Related Information

- About Using TX Lock

Mobile/Web Connect

- Brother Web Connect
- Google Cloud Print
- AirPrint
- Mobile Printing for Windows
- Mopria® Print Service
- Brother iPrint&Scan for mobile
- Near-Field Communication (NFC)

Brother Web Connect

- Brother Web Connect Overview
- Online Services Used with Brother Web Connect
- Conditions for Using Brother Web Connect
- Set Up Brother Web Connect
- Scan and Upload Documents Using Brother Web Connect
- Upload a Document from an External Memory Device Using Brother Web Connect
- Download and Print Documents Using Brother Web Connect
- Download and Save a Document to an External Memory Device Using Brother Web Connect
- FaxForward to Cloud or E-mail

Brother Web Connect Overview

Certain websites provide services that allow users to upload and view images and files on the website. Your Brother machine can scan images and upload them to these services, and also download from and print images that are already uploaded to these services.

1. Printing
2. Scanning
3. Photos, images, documents and other files
4. Web Service

To use Brother Web Connect, your Brother machine must be connected to a network that has access to the Internet, through either a wired or wireless connection.

For network setups that use a proxy server, the machine must also be configured to use a proxy server. If you are unsure of your network configuration, check with your network administrator.

A proxy server is a computer that serves as an intermediary between computers without a direct Internet connection, and the Internet.

Press (Web) or (Apps) on the touchscreen, or press (**WEB**) to use Brother Web Connect.

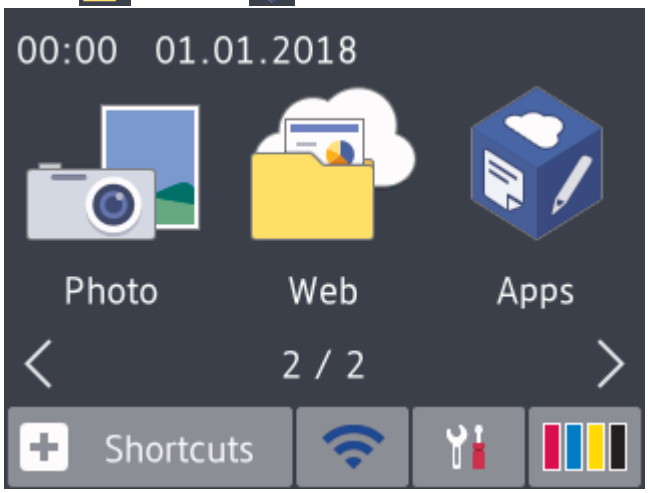

Related Information

- Brother Web Connect

Online Services Used with Brother Web Connect

Use Brother Web Connect to access online services from your Brother machine. Some of these web services offer business versions.

To use Brother Web Connect, you must have an account with the online service you want to use. If you do not already have an account, use a computer to access the service's website and create an account.

You do not need to create an account to use Brother Creative Center. (Brother CreativeCenter is available only for some models.)

Google Drive™

An online document storage, editing, sharing and file synchronisation service.

URL: drive.google.com

Evernote®

An online file storage and management service.

URL: www.evernote.com

Dropbox

An online file storage, sharing and synchronisation service.

URL: www.dropbox.com

OneDrive

An online file storage, sharing and management service.

URL: https://onedrive.live.com

Box

An online document editing and sharing service.

URL: www.box.com

OneNote

An online document editing and sharing service.

URL: www.onenote.com

Brother Creative Center

A website that offers various templates, such as greeting cards, brochures and calendars that you can print on your Brother machine. (available only for certain countries and models)

www.brother.com/creativecenter

For more information about any of these services, refer to the respective service's website.

The following table describes which file types can be used with each Brother Web Connect feature:

Accessible Services	Google Drive™ Evernote® Dropbox OneDrive Box	OneNote	Brother Creative Center
Download and print images or save them to media (DCP-J772DW/ MFC-J690DW/ MFC-J890DW)	JPEG PDF DOC DOCX XLS XLSX PPT	JPEG PDF DOC DOCX XLS XLSX PPT PPTX	(Print only)

Accessible Services	Google Drive™ Evernote® Dropbox OneDrive Box	OneNote	Brother Creative Center
	PPTX		
Upload scanned images	JPEG PDF DOCX XLSX PPTX TIFF	JPEG PDF DOCX XLSX PPTX TIFF	-
Upload images saved on media (DCP-J772DW/ MFC-J690DW/ MFC-J890DW)	JPEG	-	-
FaxForward to the online services (MFC-J690DW/ MFC-J890DW)	JPEG PDF TIFF	JPEG PDF TIFF	-

- Not all services are available in all countries.
- For Hong Kong, Taiwan and Korea

  Brother Web Connect supports only file names written in English. Files named in the local language will not be downloaded.

Related Information

- Brother Web Connect

Conditions for Using Brother Web Connect

- Brother Software Installation for Using Brother Web Connect
- Configure the Proxy Server Settings Using the Machine's Control Panel

Brother Software Installation for Using Brother Web Connect

The initial installation of Brother Web Connect requires a computer that has access to the Internet and has the Brother machine's software installed.

Windows

To install the Brother software and connect your machine to a wireless or wired network, see the *Quick Setup Guide*.

Mac

To install the **Full Driver & Software Package**, go to your model's **Downloads** page on the Brother Solutions Center at support.brother.com.

Related Information

- Conditions for Using Brother Web Connect

Configure the Proxy Server Settings Using the Machine's Control Panel

If your network uses a proxy server, the following proxy server information must be configured on the machine:

- Proxy server address
- Port number
- User Name
- Password

>> DCP-J572DW/MFC-J491DW
>> DCP-J772DW/MFC-J690DW/MFC-J890DW

DCP-J572DW/MFC-J491DW

1. Press **Settings**.
2. Press ▲ or ▼ to select the following:
   a. Select `[Network]`. Press **OK**.
   b. Select `[Web Connect Settings]`. Press **OK**.
   c. Select `[Proxy Settings]`. Press **OK**.
   d. Select `[Proxy Connection]`. Press **OK**.
   e. Select `[On]`. Press **OK**.
   f. Select the option that you want to set. Press **OK**.
   g. Enter the proxy server information. Press **OK**.
3. Press **Stop/Exit**.

DCP-J772DW/MFC-J690DW/MFC-J890DW

1. Press `[Settings]` > `[All Settings]` > `[Network]` > `[Web Connect Settings]` > `[Proxy Settings]` > `[Proxy Connection]`.
2. Press `[On]`.
3. Press the option that you want to set, and then enter the proxy server information.
   Press `[OK]`.
4. Press .

Related Information

- Conditions for Using Brother Web Connect

Set Up Brother Web Connect

- Brother Web Connect Setup Overview
- Create an Account for Each Online Service Before Using Brother Web Connect
- Apply for Brother Web Connect Access
- Register an Account on Your Brother Machine for Brother Web Connect
- Set Up Brother Web Connect for Brother CreativeCenter

Brother Web Connect Setup Overview

Configure the Brother Web Connect settings using the following procedure (when using Brother CreativeCenter, this procedure is not necessary):

Step 1: Create an account with the service you want to use.

Access the service's website using a computer and create an account. (If you already have an account, there is no need to create an additional account.)

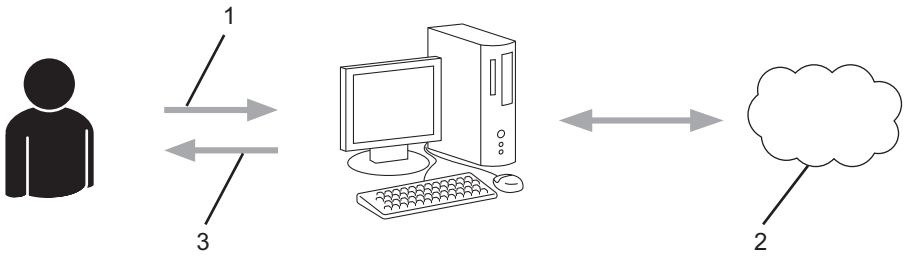

1. User registration
2. Web Service
3. Obtain account

Step 2: Apply for Brother Web Connect access.

Start Brother Web Connect access using a computer and obtain a temporary ID.

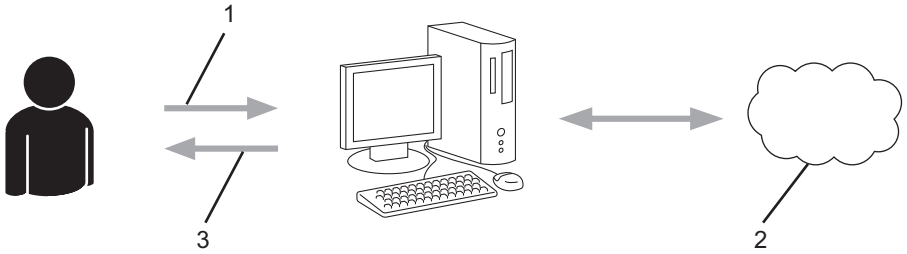

1. Enter account information
2. Brother Web Connect application page
3. Obtain temporary ID

Step 3: Register your account information on your machine so you can access the service you want to use.

Enter the temporary ID to enable the service on your machine. Specify the account name as you would like it to be displayed on the machine, and enter a PIN if you would like to use one.

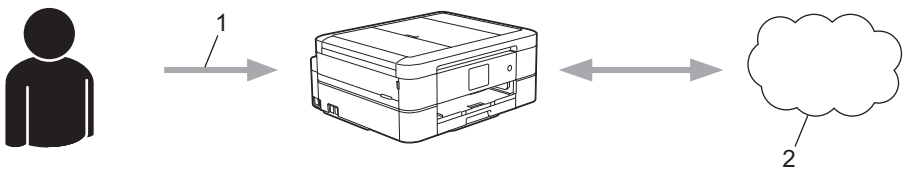

1. Enter temporary ID
2. Web Service

Your Brother machine can now use the service.

Related Information

- Set Up Brother Web Connect

Create an Account for Each Online Service Before Using Brother Web Connect

To use Brother Web Connect to access an online service, you must have an account with that online service. If you do not already have an account, use a computer to access the service's website and create an account. After creating an account, log on and use the account once with a computer before using the Brother Web Connect feature. Otherwise, you may not be able to access the service using Brother Web Connect.

If you already have an account, there is no need to create an additional account.

After you finish creating an account with the online service you want to use, apply for Brother Web Connect access.

You do not need to create an account if you use the service as a guest. You can use only certain services as a guest. If the service you want to use does not have a guest-user option, you must create an account.

Related Information

- Set Up Brother Web Connect

Apply for Brother Web Connect Access

To use Brother Web Connect to access online services, you must first apply for Brother Web Connect access using a computer that has the Brother Software installed.

1. Access the Brother Web Connect application website:

Option	Description
Windows 7	Click **(Start)** > **All Programs** > **Brother** > **Brother Utilities**, and then click the drop-down list and select your model name (if not already selected). Click **Do More** in the left navigation bar, and then click **Brother Web Connect**.
Windows 8 Windows 10	Launch (**Brother Utilities**), and then click the drop-down list and select your model name (if not already selected). Click **Do More** in the left navigation bar, and then click **Brother Web Connect**.
Windows 8.1	Move your mouse to the lower left corner of the **Start** screen and click (if you are using a touch-based device, swipe up from the bottom of the **Start** screen to bring up the **Apps** screen). Click (**Brother Utilities**), and then click the drop-down list and select your model name (if not already selected). Click **Do More** in the left navigation bar, and then click **Brother Web Connect**.
Mac	Click **Go** in the **Finder** bar, **Applications** > **Brother** > **Utilities** > **Brother Web Connect**.

You can also access the website directly:
Type bwc.brother.com into your web browser's address bar.

The Brother Web Connect page launches.

2. Select the service you want to use.

The actual screen may differ from the screen shown above.

3. Follow the on-screen instructions and apply for access.

When finished, your temporary ID will appear.

4. Make a note of your temporary ID, as you will need it to register accounts to the machine. The temporary ID is valid for 24 hours.
5. Close the web browser.

Now that you have a Brother Web Connect access ID, you must register this ID on your machine, and then use your machine to access the web service you want to use.

Related Information

- Set Up Brother Web Connect

Register an Account on Your Brother Machine for Brother Web Connect

You must enter your Brother Web Connect account information and configure your machine so that it can use Brother Web Connect to access the service you want.

- You must apply for Brother Web Connect access to register an account on your machine.
- Before you register an account, confirm that the correct date and time are set on the machine's control panel.

>> DCP-J572DW/MFC-J491DW
>> DCP-J772DW/MFC-J690DW/MFC-J890DW

DCP-J572DW/MFC-J491DW

1. Press **WEB**.

   - If information regarding the Internet connection appears on the machine's LCD, read the information and press ▶.
   - Occasionally, updates or announcements about Brother Web Connect's features will appear on the LCD. Read the information, and then press ▶.

2. Press ▲ or ▼ to select the following:
   a. Select the service with which you want to register. Press **OK**.
   b. Select `[Register/Delete]`. Press **OK**.
   c. Select `[Register Account]`. Press **OK**.
3. The machine will prompt you to enter the temporary ID you received when you applied for Brother Web Connect access. Press ▶.
4. Enter the temporary ID using the dial pad. Press **OK**.

   An error message will appear on the LCD if the information you entered does not match the temporary ID you received when you applied for access, or if the temporary ID has expired. Either enter the temporary ID correctly, or apply for access again to receive a new temporary ID.

5. The machine will prompt you to enter the account name that you want to be displayed on the LCD. Press ▶.
6. Enter the name, and then press **OK**.
7. Do one of the following:
   - To set a PIN for the account, press ▶. (A PIN prevents unauthorised access to the account.) Enter a four-digit number, and then press **OK**.
   - If you do not want to set a PIN, press ◀.

   When the account information you entered appears, confirm that it is correct.

8. Press ▶ to register your information as entered.
9. Press ▶.
   Account registration is complete and your machine can now access the service.
10. Press **Stop/Exit**.

DCP-J772DW/MFC-J690DW/MFC-J890DW

1. Press ◀ or ▶ to display `[Web]`.
   Press `[Web]`.

- If information regarding the Internet connection appears on the machine's LCD, read the information and press [OK].
- Occasionally, updates or announcements about Brother Web Connect's features will appear on the LCD. Read the information, and then press [OK].

2. Press ▲ or ▼ to display the service with which you want to register.

   Press the service name.
3. If information regarding Brother Web Connect appears, press [OK].
4. Press [Register/Delete] > [Register Account].
5. The machine will prompt you to enter the temporary ID you received when you applied for Brother Web Connect access.

   Press [OK].
6. Enter the temporary ID using the LCD, and then press [OK].

An error message will appear on the LCD if the information you entered does not match the temporary ID you received when you applied for access, or if the temporary ID has expired. Either enter the temporary ID correctly, or apply for access again and receive a new temporary ID.

7. The machine will prompt you to enter the account name that you want to be displayed on the LCD.

   Press [OK].
8. Enter the name using the LCD, and then press [OK].
9. Do one of the following:
   - To set a PIN for the account, press [Yes]. (A PIN prevents unauthorised access to the account.) Enter a four-digit number, and then press [OK].
   - If you do not want to set a PIN, press [No].

When the account information you entered appears, confirm that it is correct.

10. Press [Yes] to register your information as entered.
11. Press [OK].

    Account registration is complete and your machine can now access the service.
12. Press .

Related Information

- Set Up Brother Web Connect

Set Up Brother Web Connect for Brother CreativeCenter

Related Models: DCP-J772DW/MFC-J690DW/MFC-J890DW

Brother Web Connect is set up to work with Brother CreativeCenter automatically. No configuration is needed to create the calendars, business cards, posters and greeting cards available at www.brother.com/creativecenter.

Brother CreativeCenter is not available in all countries.

Related Information

- Set Up Brother Web Connect

Scan and Upload Documents Using Brother Web Connect

Upload your scanned photos and documents directly to a web service without using a computer.

- When scanning and uploading JPEG files, monochrome scanning is not available.
- When scanning and uploading searchable PDF or Microsoft Office files, monochrome and grey scanning is not available.
- When scanning and uploading JPEG files, each page is uploaded as a separate file.
- Uploaded documents are saved in an album named **From_BrotherDevice**.

For information regarding restrictions, such as the size or number of documents that can be uploaded, refer to the respective service's website.

>> DCP-J572DW/MFC-J491DW
>> DCP-J772DW/MFC-J690DW/MFC-J890DW

DCP-J572DW/MFC-J491DW

1. Load your document.
2. Press **WEB**.

- If information regarding the Internet connection appears on the machine's LCD, read the information and press ▶.
- Occasionally, updates or announcements about Brother Web Connect's features will appear on the LCD. Read the information, and then press ▶.

3. Press ▲ or ▼ to select the following:
   a. Select the service that hosts the account to which you want to upload. Press **OK**.
   b. Select your account name. Press **OK**.
4. If the PIN entry screen appears, enter the four-digit PIN, and then press **OK**.
5. Press ▲ or ▼ to select `[Upload: Scanner]`, and then press **OK**.
6. Follow the on-screen instructions to complete this operation.

DCP-J772DW/MFC-J690DW/MFC-J890DW

1. Load your document.
2. Press ◀ or ▶ to display `[Web]`.

   Press `[Web]`.

- You can also press `[Scan]` > `[to Web]`.
- If information regarding the Internet connection appears on the machine's LCD, read the information and press `[OK]`.
- Occasionally, updates or announcements about Brother Web Connect's features will appear on the LCD. Read the information, and then press `[OK]`.

3. Press ▲ or ▼ to display the service that hosts the account to which you want to upload.

   Press the service name.
4. Press ▲ or ▼ to display your account name, and then press it.
5. If the PIN entry screen appears, enter the four-digit PIN and press `[OK]`.
6. Press ▲ or ▼ to display `[Upload: Scanner]`.

   Press `[Upload: Scanner]`.

- If you pressed [Scan] > [to Web], this option does not appear.
- This option may not appear depending on the service.

7. Follow the on-screen instructions to complete this operation.

Related Information

- Brother Web Connect

Upload a Document from an External Memory Device Using Brother Web Connect

Related Models: DCP-J772DW/MFC-J690DW/MFC-J890DW

Documents saved on media (such as a memory card or a USB flash drive) connected to the machine can be uploaded directly to a web service.

- Uploaded documents are saved in an album named **From_BrotherDevice**.
- USB flash drive is available only for some models.

For information regarding restrictions, such as the size or number of documents that can be uploaded, refer to the respective service's website.

IMPORTANT

DO NOT remove the memory card or USB flash drive while your Brother machine is accessing the media. Otherwise, the card, USB flash drive, or data stored on the card could be damaged.

(For Hong Kong, Taiwan and Korea)

Brother Web Connect supports only file names written in English. Files named in the local language will not be uploaded.

1. Open the media slot cover.
2. Insert a memory card or USB flash drive into your machine.

   The LCD automatically changes.
3. Press ◀ or ▶ to display `[Web]`.

   Press `[Web]`.

- If information regarding the Internet connection appears on the machine's LCD, read the information and press `[OK]`.
- Occasionally, updates or announcements about Brother Web Connect's features will appear on the LCD. Read the information, and then press `[OK]`.

4. Press ▲ or ▼ to display the service that hosts the account to which you want to upload.

   Press the service name.
5. Press ▲ or ▼ to display your account name, and then press it.
6. If the PIN entry screen appears, enter the four-digit PIN and press `[OK]`.
7. Press ▲ or ▼ to display `[Upload: Media]`.

   Press `[Upload: Media]`.
8. Follow the on-screen instructions to complete this operation.

Related Information

- Brother Web Connect

Download and Print Documents Using Brother Web Connect

Related Models: DCP-J772DW/MFC-J690DW/MFC-J890DW

Documents that have been uploaded to your account can be downloaded directly to your machine and printed. Documents that other users have uploaded to their own accounts for sharing can also be downloaded to your machine and printed, as long as you have viewing privileges for those documents. Certain services allow guest users to view documents that are public. When accessing a service or an account as a guest user, you can view documents that the owner has made public, that is, documents with no viewing restrictions.

To download other users' documents, you must have access privileges to view the corresponding albums or documents.

For Hong Kong, Taiwan and Korea

Brother Web Connect supports only file names written in English. Files named in the local language will not be downloaded.

Related Information

- Brother Web Connect
- Download and Print Using Web Services
- Download and Print Brother CreativeCenter Templates

Download and Print Using Web Services

Related Models: DCP-J772DW/MFC-J690DW/MFC-J890DW

For information on Brother CreativeCenter Templates, see *Related Information*.

1. Press ◀ or ▶ to display [Web].

   Press [Web].

   - If information regarding the Internet connection appears on the machine's LCD, read the information and press [OK].
   - Occasionally, updates or announcements about Brother Web Connect's features will appear on the LCD. Read the information, and then press [OK].

2. Press ▲ or ▼ to display the service that hosts the document you want to download and print.

   Press the service name.

3. Do one of the following:
   - To log on to the service, press ▲ or ▼ to display your account name, and then press it. If the PIN entry screen appears, enter the four-digit PIN and press [OK].
   - To access the service as a guest user, press ▲ or ▼ to display [Use as a GuestUser], and then press it. When the information regarding access as a guest user appears, press [OK].

4. Press ▲ or ▼ to display [Download: Print].

   Press [Download: Print].

   - If you accessed the service as a guest user, enter or select the account name of the user whose documents you want to download.

5. Press ▲ or ▼ to display the desired album, and then press it.

   - An album is a collection of documents. However, the actual term may differ depending on the service you use. When using Evernote®, you must select the notebook, and then select the note.
   - Some services do not require documents to be saved in albums. For documents not saved in albums, select [See Unsorted Files] or [See UnsortedPhotos] to select documents. You cannot download documents from other users if the documents are not saved in an album.

6. Press the thumbnail of the document you want to print. Confirm the document on the LCD and press [OK]. Select additional documents to print (you can select up to 10 documents).
7. When finished, press [OK].
8. Follow the on-screen instructions to complete this operation.

Related Information

- Download and Print Documents Using Brother Web Connect
- Download and Print Brother CreativeCenter Templates

Download and Print Brother CreativeCenter Templates

Related Models: DCP-J772DW/MFC-J690DW/MFC-J890DW

Brother CreativeCenter is not available in all countries.

1. Press ◀ or ▶ to display [Apps].

   Press [Apps].

   - If information regarding the Internet connection appears on the machine's LCD, read it, and then press [OK].
   - Occasionally, updates or announcements about Brother Web Connect's features will appear on the LCD. Read the information, and then press [OK].

2. Press ▲ or ▼ to display [Print "CreativeCenter" Templates].

   Press [Print "CreativeCenter" Templates].

3. Press ▲ or ▼ to display the desired category, and then press it.
4. Select the desired file. Enter the number of copies you want to print and then press [OK]. Repeat this step until you have selected all the files that you want to print.
5. When finished, press [OK].

   If information regarding the recommended print settings appears on the machine's LCD, read the information and press [OK].

6. Follow the on-screen instructions to complete this operation.

Related Information

- Download and Print Documents Using Brother Web Connect
- Download and Print Using Web Services

Download and Save a Document to an External Memory Device Using Brother Web Connect

Related Models: DCP-J772DW/MFC-J690DW/MFC-J890DW

JPEG, PDF and Microsoft Office files can be downloaded from a service and saved directly on media connected to the machine. Documents that other users have uploaded to their own accounts for sharing can also be downloaded to your machine as long as you have viewing privileges for those documents. Certain services allow guest users to view documents that are public. When accessing a service or an account as a guest user, you can view documents that the owner has made public, that is, documents with no viewing restrictions.

- Make sure there is enough available space on your memory card or USB flash drive.
- To download other users' documents, you must have access privileges to view the corresponding albums or documents.
- USB flash drive is available only for some models.
- Downloaded files are renamed based on the current date. For example, the first image saved on July 1, would be named 07010001.jpg. Note that the region setting also determines the date format of the file name.
- Images are saved in the "BROTHER" folder, which can be found on the root level of the media.

IMPORTANT

DO NOT remove the memory card or USB flash drive while your Brother machine is accessing the media. Otherwise, the card, USB flash drive, or data stored on the card could be damaged.

1. Open the media slot cover.
2. Insert a memory card or USB flash drive into your machine.

   The LCD automatically changes.
3. Press ◀ or ▶ to display `[Web]`.

   Press `[Web]`.

   - If information regarding the Internet connection appears on the machine's LCD, read the information and press `[OK]`.
   - Occasionally, updates or announcements about Brother Web Connect's features will appear on the LCD. Read the information, and then press `[OK]`.
4. Press ▲ or ▼ to display the service that hosts the document you want to download.

   Press the service name.
5. Do one of the following:
   - To log on to the service, press ▲ or ▼ to display your account name, and then press it. If the PIN entry screen appears, enter the four-digit PIN and press `[OK]`.
   - To access the service as a guest user, press ▲ or ▼ to display `[Use as a GuestUser]`, and then press it. When the information regarding access as a guest user appears, press `[OK]`.
6. Press ▲ or ▼ to display `[Download: Media]`.

   Press `[Download: Media]`.

   - If you accessed the service as a guest user, enter or select the account name of the user whose documents you want to download.
7. Follow the on-screen instructions to complete this operation.

- An album is a collection of documents. However, the actual term may differ depending on the service you use. When using Evernote®, you must select the notebook, and then select the note.
- Some services do not require documents to be saved in albums. For documents not saved in albums, select `[See Unsorted Files]` or `[See UnsortedPhotos]` to select documents. You cannot download documents from other users if the documents are not saved in an album.

Related Information

- Brother Web Connect

FaxForward to Cloud or E-mail

Related Models: MFC-J690DW/MFC-J890DW

- Use the FaxForward to Cloud feature to automatically forward incoming faxes to your accounts with the available online services.

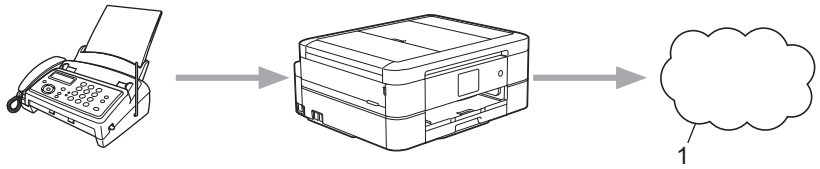

1. Web Service

- Use the FaxForward to E-mail feature to automatically forward incoming faxes to an inbox as email attachments.

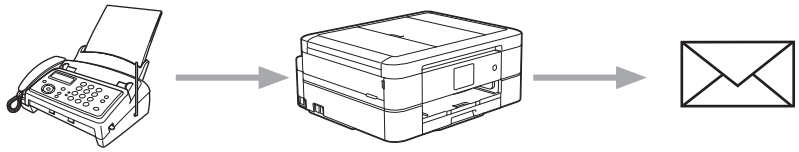

Related Information

- Brother Web Connect
- Turn On FaxForward to Cloud or E-mail
- Turn Off FaxForward to Cloud or E-mail

Turn On FaxForward to Cloud or E-mail

Related Models: MFC-J690DW/MFC-J890DW

Turn on the FaxForward feature to automatically forward incoming faxes to either an online service or an inbox as email attachments.

- This feature is available only for monochrome faxes.
- If you turn on FaxForward, you cannot use the following features:
  - [Fax Forward]
  - [Fax Storage]
  - [PC Fax Receive]

1. Press ◀ or ▶ to display [Apps].

   Press [Apps].

   - If information regarding the Internet connection appears on the machine's LCD, read it, and then press [OK].
   - Occasionally, updates or announcements about Brother Web Connect's features will appear on the LCD. Read the information, and then press [OK].

2. Press ▲ or ▼ to display [FaxForward to Cloud/E-mail].

   Press [FaxForward to Cloud/E-mail].

   If information regarding [FaxForward to Cloud/E-mail] appears, read it, and then press [OK].

3. Press [On].
4. Press [Forward to Cloud] or [Forward to E-mail].
   - If you selected [Forward to Cloud], choose the online service you want to receive the faxes, and then specify your account name.
   - If you selected [Forward to E-mail], select the email address you want to receive the faxes as email attachments.
5. Follow the on-screen instructions to complete this operation.

Related Information

- FaxForward to Cloud or E-mail
- Memory Receive Options

Turn Off FaxForward to Cloud or E-mail

Related Models: MFC-J690DW/MFC-J890DW

Turn off FaxForward when you want to stop incoming faxes from automatically going to either an online service or an inbox as email attachments.

If there are received faxes still in your machine's memory, you cannot turn off FaxForward.

1. Press ◀ or ▶ to display [Apps].

   Press [Apps].

   - If information regarding the Internet connection appears on the machine's LCD, read it, and then press [OK].
   - Occasionally, updates or announcements about Brother Web Connect's features will appear on the LCD. Read the information, and then press [OK].

2. Press ▲ or ▼ to display [FaxForward to Cloud/E-mail].

   Press [FaxForward to Cloud/E-mail].

   If information regarding [FaxForward to Cloud/E-mail] appears, read it, and then press [OK].

3. Press [Off].
4. Press [OK].

Related Information

- FaxForward to Cloud or E-mail

Google Cloud Print

- Google Cloud Print Overview
- Before Using Google Cloud Print
- Print from Google Chrome™ or Chrome OS™
- Print from Google Drive™ for Mobile
- Print from Gmail™ Webmail Service for Mobile

Google Cloud Print Overview

Google Cloud Print™ is a Google service that allows you to print to a printer registered to your Google account using a network-compatible device (such as a mobile phone or computer) without installing the printer driver on the device.

Printing from Android™ apps requires installing the Google Cloud Print™ app from the Google Play™ Store.

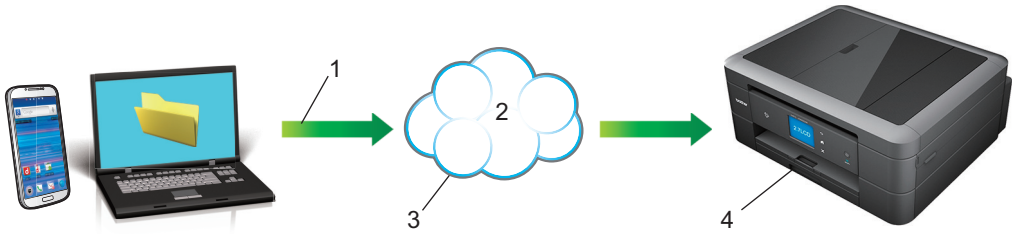

1. Print request
2. Internet
3. Google Cloud Print™
4. Printing

Related Information

- Google Cloud Print

Before Using Google Cloud Print

- Network Settings for Using Google Cloud Print
- Register Your Machine with Google Cloud Print Using Google Chrome™
- Register Your Machine with Google Cloud Print Using Web Based Management

Network Settings for Using Google Cloud Print

In order to use Google Cloud Print™, your Brother machine must be connected to a network that has access to the Internet, either through a wired or wireless connection. To connect and configure your machine correctly, see the *Quick Setup Guide* or related topics in this guide.

Related Information

- Before Using Google Cloud Print

Register Your Machine with Google Cloud Print Using Google Chrome™

Make sure you have already created a Google Account. If you do not have an account, use a computer or mobile device to access the Google website (https://accounts.google.com/signup) and create an account.

Make sure your Brother machine is idle before starting the registration process.

The steps in this section are examples for Windows users.

Screens on your computer may vary depending on your operating system and environment.

1. Open Google Chrome™ on your computer.
2. Sign in to your Google Account.
3. Click the Google Chrome™ menu icon, and then **Settings** > **Show advanced settings...**.
4. In the **Google Cloud Print** section, click **Manage**.
5. Follow the on-screen instructions to register your machine.
6. When a confirmation message appears on your machine, press the `[OK]` button.

If the confirmation message does not appear on your machine's LCD, repeat these steps.

7. When your Brother machine is successfully registered, it will appear in the **My devices** field.

Related Information

- Before Using Google Cloud Print

Register Your Machine with Google Cloud Print Using Web Based Management

Make sure you have already created a Google Account. If you do not have an account, use a computer or mobile device to access the Google website (https://accounts.google.com/signup) and create an account.

Make sure your Brother machine is idle before starting the registration process.

Before you begin to register your machine, confirm that the correct date and time are set on the machine's control panel. See *Related Information*.

1. Confirm that your Brother machine is connected to the same network as your computer or mobile device.
2. Start your web browser.
3. Type "http://machine's IP address" in your browser's address bar (where "machine's IP address" is the machine's IP address).

   For example:

   http://192.168.1.2

- You can see your machine's IP address in the Network menu on the control panel of your machine.
- If you have set a login password for Web Based Management, type your password in the **Login** box, then click .

4. Click **Google Cloud Print**.
5. Make sure that **Status** is set to **Enabled**. Click **Register**.
6. When a confirmation message appears on your machine's LCD, press [OK].

If the confirmation message does not appear on your machine's LCD, repeat these steps.

7. Click **Google**.
8. The sign-in screen for Google Cloud Print™ appears. Sign in with your Google Account and follow the on-screen instructions to register your machine.
9. When you have finished registering your machine, return to the Web Based Management screen and make sure that **Registration Status** is set to **Registered**.

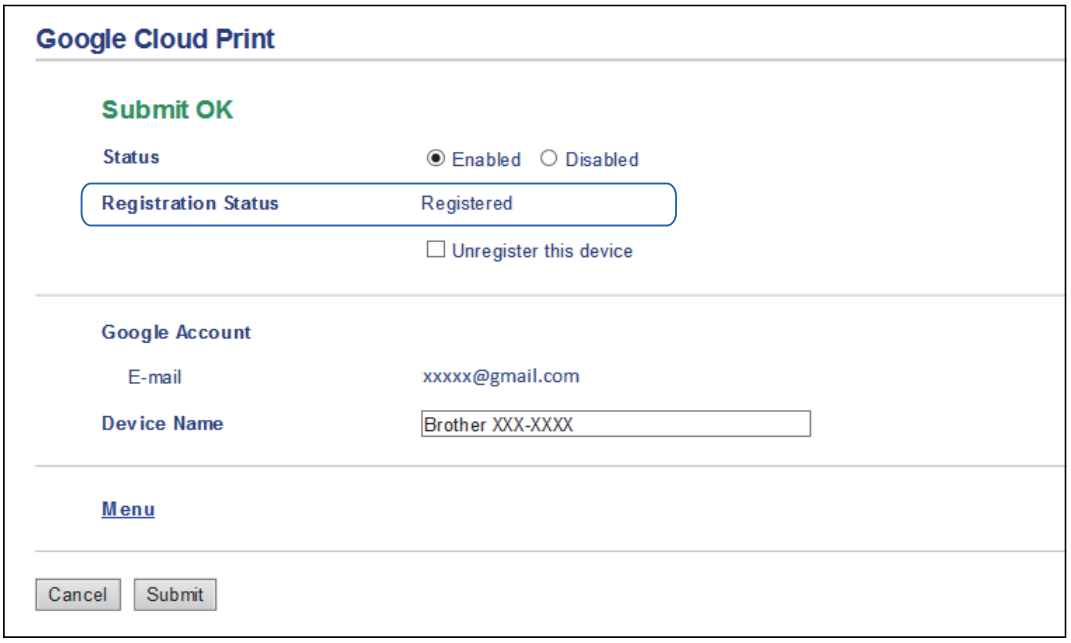

Related Information

- Before Using Google Cloud Print
- Set the Date and Time

Print from Google Chrome™ or Chrome OS™

1. Make sure your Brother machine is turned on.
2. Open the web page that you want to print.
3. Click the Google Chrome™ menu icon.
4. Click **Print**.
5. Select your machine from the printer list.
6. Change print options, if needed.
7. Click **Print**.

Related Information

- Google Cloud Print

Print from Google Drive™ for Mobile

1. Make sure your Brother machine is turned on.
2. Access Google Drive™ from your Android™ or or iOS device's web browser.
3. Open the document that you want to print.
4. Tap the menu icon.
5. Tap **Print**.
6. Select your machine from the printer list.
7. Change print options, if needed.
8. Tap or **Print**.

Related Information

- Google Cloud Print

Print from Gmail™ Webmail Service for Mobile

1. Make sure your Brother machine is turned on.
2. Access the Gmail™ webmail service from your Android™ or iOS device's web browser.
3. Open the email that you want to print.
4. Tap the menu icon.

If **Print** appears beside the attachment name, you can also print the attachment. Tap **Print**, and then follow the instructions on your mobile device.

5. Tap **Print**.
6. Select your machine from the printer list.
7. Change print options, if needed.
8. Tap or **Print**.

Related Information

- Google Cloud Print

AirPrint

- AirPrint Overview
- Before Using AirPrint (macOS)
- Print Using AirPrint
- Scan Using AirPrint (macOS)
- Send a Fax Using AirPrint (macOS)

AirPrint Overview

AirPrint is a printing solution for Apple operating systems that allows you to wirelessly print photos, email, web pages and documents from your iPad, iPhone, iPod touch and Mac computer without the need to install a driver.

AirPrint also lets you send faxes directly from your Mac computer without printing them and lets you scan documents to your Mac computer. (MFC models)

For more information, visit Apple's website.

Related Information

- AirPrint

Before Using AirPrint (macOS)

Before printing using macOS, add your Brother machine to the printer list on your Mac computer.

1. Select **System Preferences** from the Apple Menu.
2. Click **Printers & Scanners**.
3. Click the + icon below the Printers pane on the left.
4. Click **Add Printer or Scanner…**. The **Add** screen appears.
5. Select your Brother machine, and then select **AirPrint** from the **Use** pop-up menu.
6. Click **Add**.

Related Information

- AirPrint

Print Using AirPrint

- Print from iPad, iPhone, or iPod Touch
- Print Using AirPrint (macOS)

Print from iPad, iPhone, or iPod Touch

The procedure used to print may vary by application. Safari is used in the example below.

1. Make sure your Brother machine is turned on.
2. Use Safari to open the page that you want to print.
3. Tap or .
4. Tap **Print**.
5. Make sure your Brother machine is selected.
6. If a different machine (or no printer) is selected, tap **Printer**.

   A list of available machines appears.
7. Tap your machine's name in the list.
8. Select the desired options, such as the number of pages to print and 2-sided printing (if supported by your machine).
9. Tap **Print**.

Related Information

- Print Using AirPrint

Print Using AirPrint (macOS)

The procedure used to print may vary by application. Safari is used in the example below. Before printing, make sure your Brother machine is in the printer list on your Mac computer.

1. Make sure your Brother machine is turned on.
2. On your Mac computer, use Safari to open the page that you want to print.
3. Click the **File** menu, and then select **Print**.
4. Make sure your Brother machine is selected. If a different machine (or no printer) is selected, click the **Printer** pop-up menu, and then select your Brother machine.
5. Select the desired options, such as the number of pages to print and 2-sided printing (if supported by your machine).
6. Click **Print**.

Related Information

- Print Using AirPrint
- Before Using AirPrint (macOS)

Scan Using AirPrint (macOS)

Before scanning, make sure your Brother machine is in the scanner list on your Mac computer.

1. Load your document.
2. Select **System Preferences** from the Apple menu.
3. Click **Printers & Scanners**.
4. Select your Brother machine from the scanner list.
5. Click the **Scan** tab, and then click the **Open Scanner…** button.

   The Scanner screen appears.
6. If you place the document in the ADF, select **Use Document Feeder** check box, and then select the size of your document from the scan size setting pop-up menu.
7. Select the destination folder or destination application from the destination setting pop-up menu.
8. Click **Show Details** to change the scanning settings if needed.

   You can crop the image manually by dragging the mouse pointer over the portion you want to scan when scanning from the scanner glass.
9. Click **Scan**.

Related Information

- AirPrint
- Before Using AirPrint (macOS)

Send a Fax Using AirPrint (macOS)

Related Models: MFC-J491DW/MFC-J690DW/MFC-J890DW

Make sure your Brother machine is in the printer list on your Mac computer. Apple TextEdit is used in the example below.

- AirPrint supports only monochrome fax documents.

1. Make sure your Brother machine is turned on.
2. On your Mac computer, open the file that you want to send as a fax.
3. Click the **File** menu, and then select **Print**.
4. Click the **Printer** pop-up menu, and then select **Brother MFC-XXXX - Fax** (where XXXX is your model name).
5. Type the fax recipient information.
6. Click **Fax**.

Related Information

- AirPrint
- Before Using AirPrint (macOS)

Mobile Printing for Windows

Mobile printing for Windows is a function to print wirelessly from your Windows mobile device. You can connect to the same network that your Brother machine is connected to and print without installing the printer driver on the device. Many Windows apps support this function.

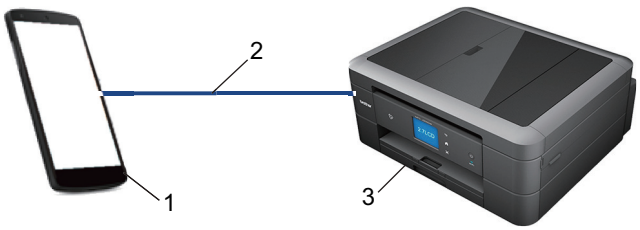

1. Windows mobile device (Windows 10 Mobile or later)
2. Wi-Fi® connection
3. Your Brother machine

Related Information

- Mobile/Web Connect

Mopria® Print Service

Mopria® Print Service is a print feature on Android™ mobile devices (Android™ version 4.4 or later) developed by the Mopria® Alliance. With this service, you can connect to the same network as your machine and print without additional setup. Many native Android™ apps support printing.

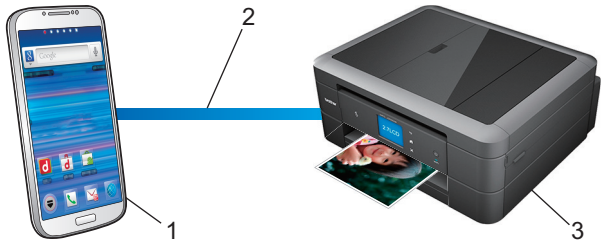

1. Android™ 4.4 or later
2. Wi-Fi® Connection
3. Your Brother Machine

You must download the Mopria® Print Service from the Google Play™ Store and install it on your Android™ device. Before using this service, you must turn it on.

Related Information

- Mobile/Web Connect

Brother iPrint&Scan for mobile

Use Brother iPrint&Scan to print and scan from various mobile devices.

- For Android™ Devices

  Brother iPrint&Scan allows you to use features of your Brother machine directly from your Android™ device, without using a computer.

  Download and install Brother iPrint&Scan from the Google Play™ Store app.
- For Apple Devices

  Brother iPrint&Scan allows you to use features of your Brother machine directly from your Apple device.

  Download and install Brother iPrint&Scan from the App Store.
- For Windows Devices

  Brother iPrint&Scan allows you to use features of your Brother machine directly from your Windows device, without using a computer.

  Download and install Brother iPrint&Scan from the Microsoft Store.

For more detailed information, visit support.brother.com/ips.

Related Information

- Mobile/Web Connect
- Brother iPrint&Scan for Windows and Mac

Near-Field Communication (NFC)

Related Models: MFC-J890DW

Near-Field Communication (NFC) allows for simple transactions, data exchange and wireless connections between two devices that are close to each other.

If your Android™ device is NFC-enabled, you can print data (photos, PDF files, text files, web pages and email messages) from the device or scan photos and documents to the device by touching it to the NFC symbol on the machine's control panel.

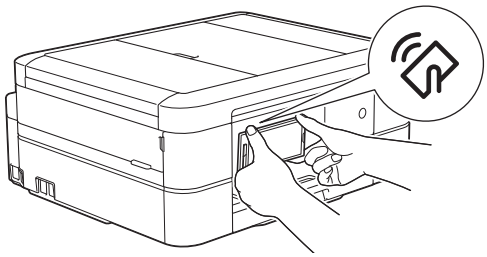

You must download and install Brother iPrint&Scan to your Android™ device to use this feature.

Related Information

- Mobile/Web Connect
- Control Panel Overview

ControlCenter

Use Brother's ControlCenter software utility to quickly access your frequently-used applications. Using ControlCenter gives you direct access to specific applications.

- ControlCenter4 (Windows)

ControlCenter4 (Windows)

- Change the Operation Mode in ControlCenter4 (Windows)
- Scan Using ControlCenter4 Home Mode (Windows)
- Scan Using ControlCenter4 Advanced Mode (Windows)
- Set Up the Brother Machine Using ControlCenter4 (Windows)
- Create a Custom Tab Using ControlCenter4 Advanced Mode (Windows)
- Set Up the Brother Machine from Your Computer (Windows)
- Set Up Your Machine's Address Book Using ControlCenter4 (Windows)

Change the Operation Mode in ControlCenter4 (Windows)

ControlCenter4 has two operation modes: **Home Mode** and **Advanced Mode**. You can change modes at any time.

Home Mode

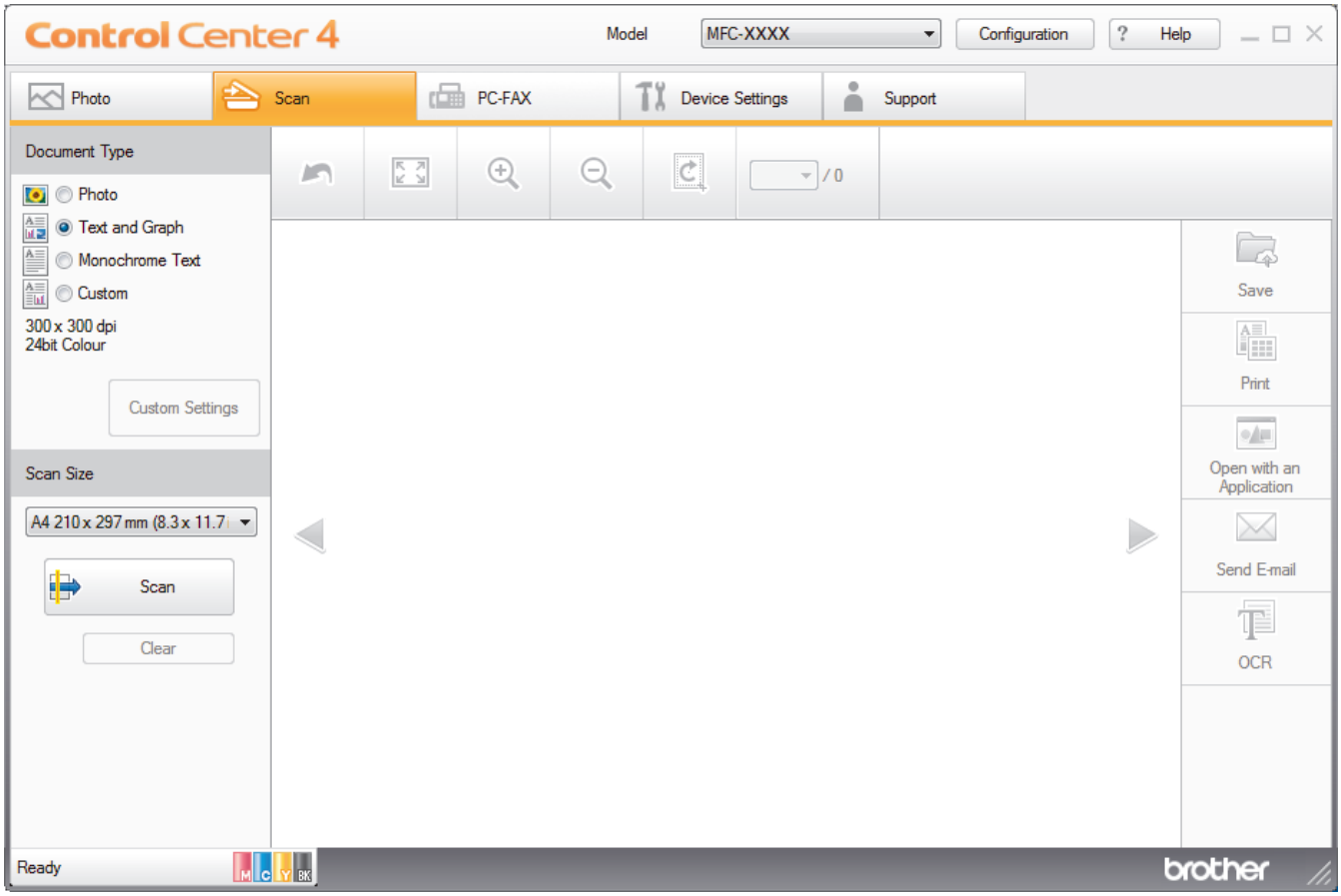

Advanced Mode

- **Home Mode**

  ControlCenter4 Home Mode lets you access your machine's main features easily.
- **Advanced Mode**

ControlCenter4 Advanced Mode gives you more control over the details of your machine's features and allows you to customise one-button scan actions.

To change operation mode:

1. Click the (**ControlCenter4**) icon in the task tray, and then select **Open**.
2. Click the **Configuration** button, and then select **Mode Select**.
3. The mode selection dialog box appears. Select either the **Home Mode** or **Advanced Mode** option.

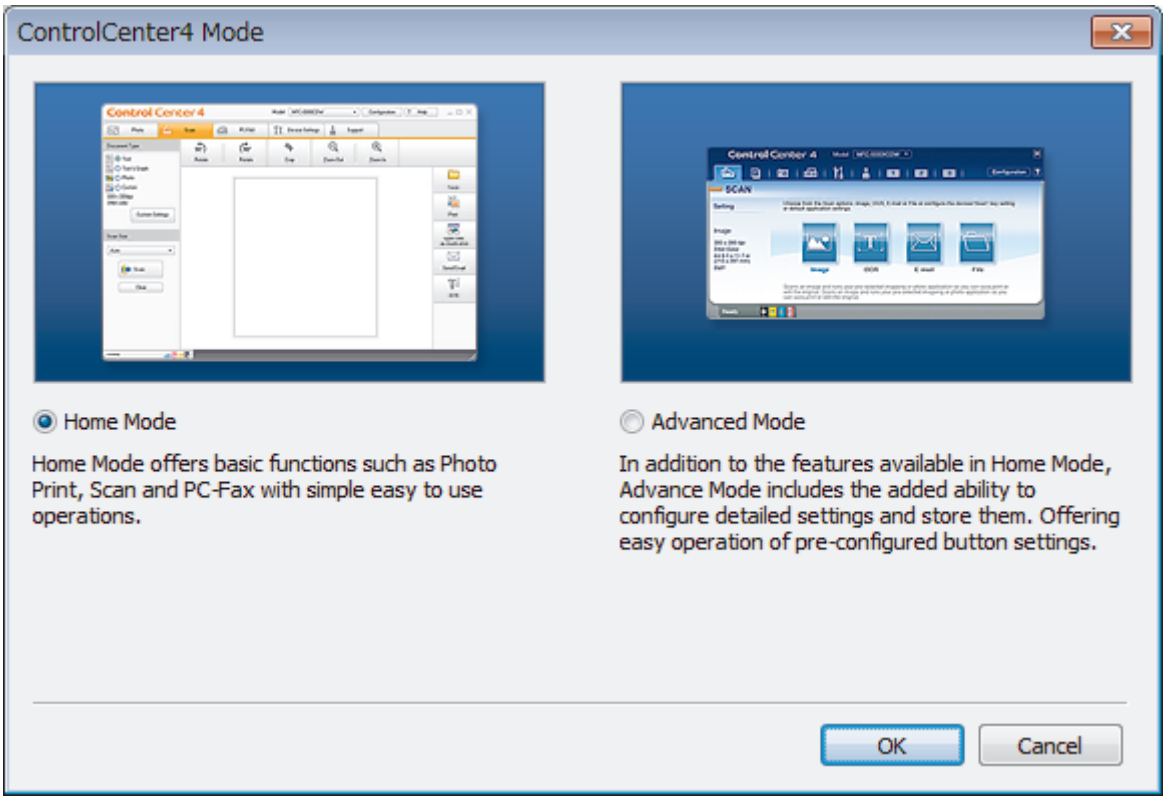

4. Click **OK**.

Related Information

- ControlCenter4 (Windows)
- Scan Using ControlCenter4 Home Mode (Windows)
- Scan Using ControlCenter4 Advanced Mode (Windows)

Scan Using ControlCenter4 Home Mode (Windows)

Use ControlCenter4 Home Mode to access your machine's main features.

- Scan Using ControlCenter4 Home Mode (Windows)
- Save Scanned Data to a Folder as a PDF File Using ControlCenter4 Home Mode (Windows)
- Scan Settings for ControlCenter4 Home Mode (Windows)
- Change the Operation Mode in ControlCenter4 (Windows)

Scan Using ControlCenter4 Advanced Mode (Windows)

ControlCenter4 Advanced Mode gives you more control over the details of your machine's features and allows you to customise one-button scan actions.

- Scan Photos and Graphics Using ControlCenter4 Advanced Mode (Windows)
- Save Scanned Data to a Folder as a PDF File Using ControlCenter4 Advanced Mode (Windows)
- Scan Both Sides of an ID Card Using ControlCenter4 Advanced Mode (Windows)
- Scan to Email Attachment Using ControlCenter4 Advanced Mode (Windows)
- Scan to an Editable Text File (OCR) Using ControlCenter4 Advanced Mode (Windows)
- Scan to an Office File Using ControlCenter4 Advanced Mode (Windows)
- Scan Settings for ControlCenter4 Advanced Mode (Windows)
- Change the Operation Mode in ControlCenter4 (Windows)

Set Up the Brother Machine Using ControlCenter4 (Windows)

Related Models: MFC-J491DW/MFC-J690DW/MFC-J890DW

1. Click the (**ControlCenter4**) icon in the task tray, and then click **Open**.
2. Click the **Device Settings** tab.
3. Click the **Remote Setup** button.
4. Configure the settings as needed.

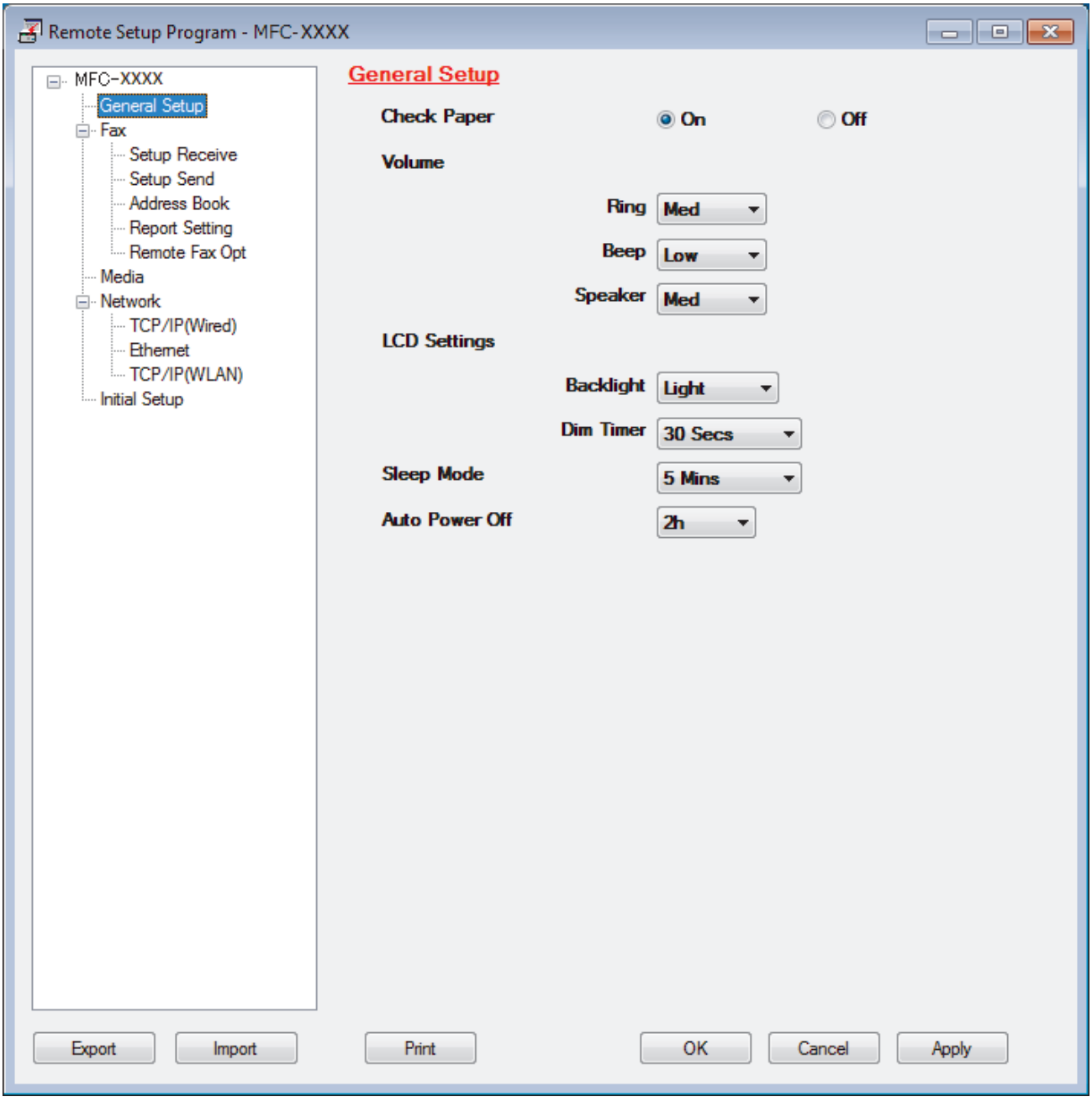

Export

Click to save the current configuration settings to a file.

Click **Export** to save your address book or all settings for your machine.

Import

Click to import a file and read its settings.

Print

Click to print the selected items on the machine. You cannot print the data until it is uploaded to the machine. Click **Apply** to upload the new data to the machine, and then click **Print**.

OK

Click to start uploading data to the machine, and then exit the Remote Setup Program. If an error message appears, confirm that your data is correct, and then click **OK**.

Cancel

Click to exit the Remote Setup Program without uploading data to the machine.

Apply

Click to upload data to the machine without exiting the Remote Setup Program.

5. Click **OK**.

- If your computer is protected by a firewall and is unable to use Remote Setup, you may need to configure the firewall settings to allow communication through port numbers 137 and 161.
- If you are using Windows Firewall and you installed the Brother software and drivers from the Brother installation disc, the necessary firewall settings have already been set.

Related Information

- ControlCenter4 (Windows)
- Remote Setup (Windows)

Create a Custom Tab Using ControlCenter4 Advanced Mode (Windows)

You can create up to three customised tabs, each including up to five customised buttons, with your preferred settings.

Select **Advanced Mode** as the mode setting for ControlCenter4.

1. Click the (**ControlCenter4**) icon in the task tray, and then click **Open**.
2. Click the **Configuration** button, and then select **Create custom tab**.
   A custom tab is created.
3. To change the name of a custom tab, right-click the custom tab, and then select **Rename custom tab**.
4. Click the **Configuration** button, select **Create custom button**, and then select the button you want to create.
   The settings dialog box appears.
5. Type the button name, and then change the settings, if needed. Click **OK**.
   The setting options vary depending on the button you select.

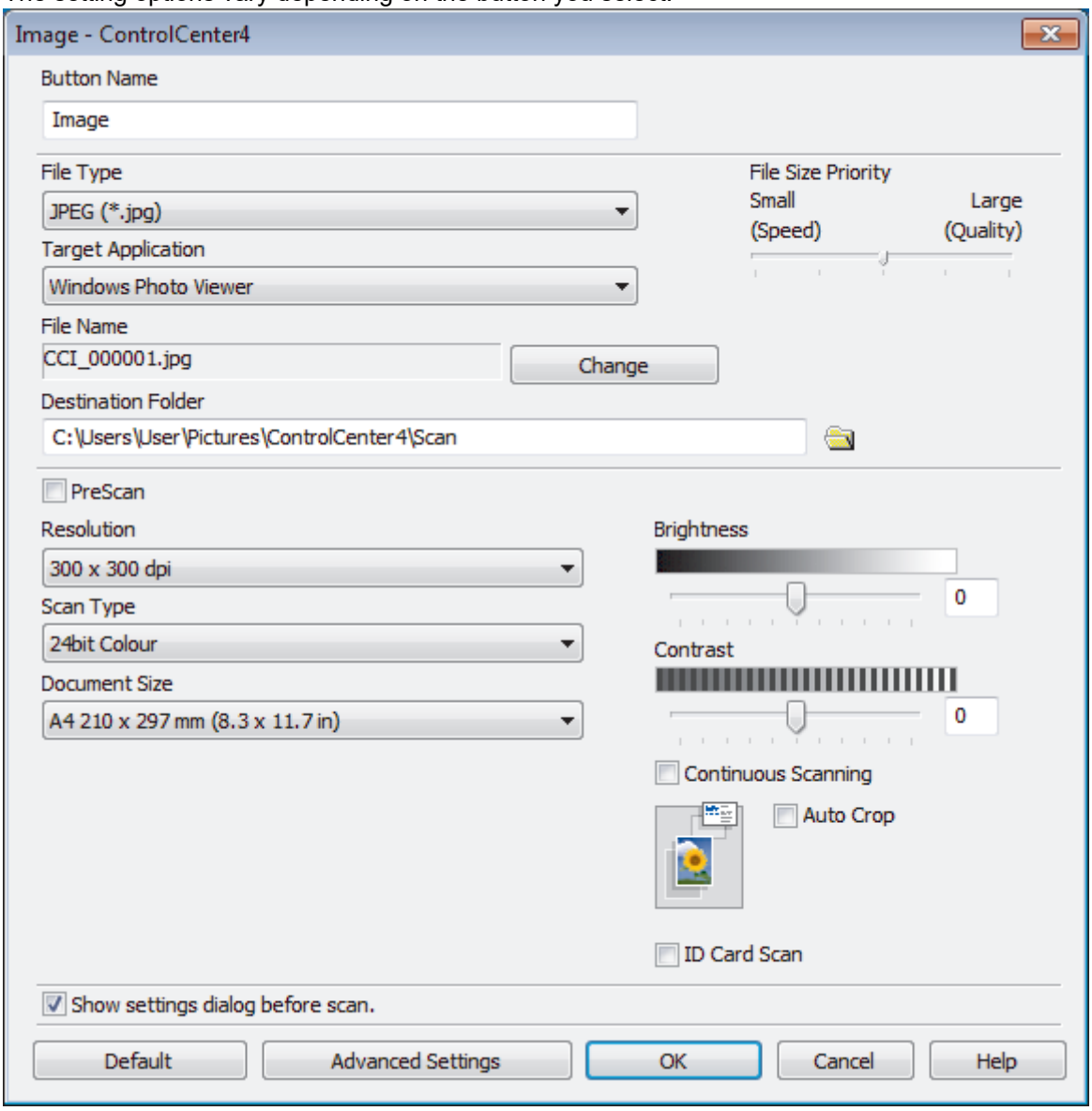

You can change or remove the created tab, button, or settings. Click the **Configuration** button, and then follow the menu.

Related Information

- ControlCenter4 (Windows)

Brother iPrint&Scan for Windows and Mac

- Brother iPrint&Scan Overview
- Scan Using Brother iPrint&Scan (Mac)

Brother iPrint&Scan Overview

Use Brother iPrint&Scan for Windows and Mac to print and scan from your computer.

The following screen shows an example of Brother iPrint&Scan for Windows. The actual screen may differ depending on the version of the application.

- For Windows

  Go to your model's **Downloads** page on the Brother Solutions Center at support.brother.com to download the latest application.

- For Mac

  Download and install Brother iPrint&Scan from the App Store.

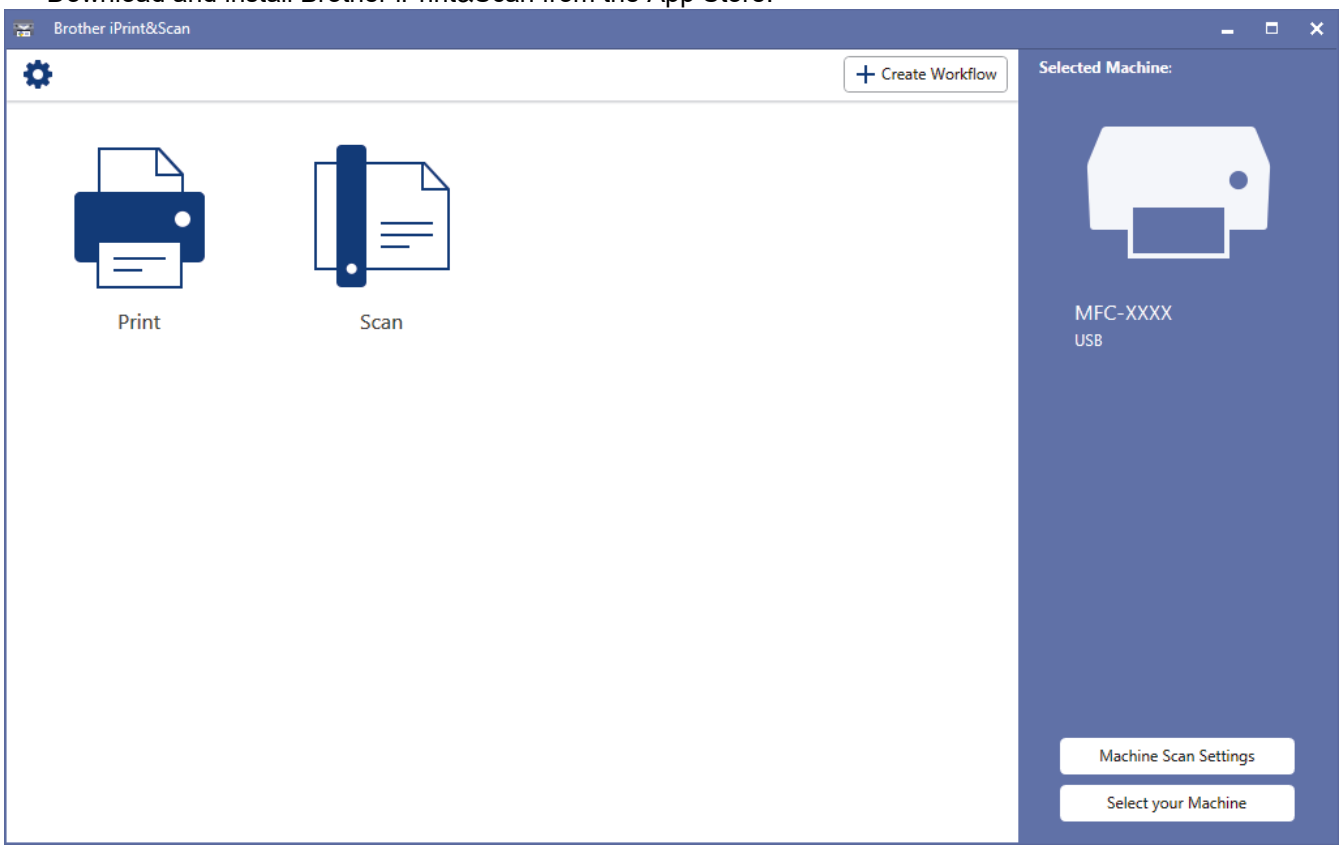

Related Information

- Brother iPrint&Scan for Windows and Mac
- Brother iPrint&Scan for mobile

Troubleshooting

If you think there is a problem with your machine, first check each of the items below, then try to identify the problem, and follow our troubleshooting tips.

You can correct most problems yourself. If you need additional help, the Brother Solutions Center offers the latest **FAQs & Troubleshooting** tips.

Visit us at support.brother.com.

Click **FAQs & Troubleshooting** and search for your model name.

First, check the following:

- The machine's power cord is connected correctly and the machine's power is on.
- All of the machine's orange protective parts have been removed.
- The ink cartridges are installed correctly.
- The Scanner Cover and the Jam Clear Cover are fully closed.
- Paper is inserted correctly in the paper tray.
- The interface cables are securely connected to the machine and the computer, or the wireless connection is set up on both the machine and your computer.
- (For network models) The access point (for wireless), router, or hub is turned on and its link button is blinking.
- The machine's LCD is displaying messages.

If you did not solve the problem with the checks, identify the problem and then see *Related Information*.

Related Information

- Error and Maintenance Messages
- Document Jams
- Printer Jam or Paper Jam
- If You Are Having Difficulty with Your Machine
- Check the Machine Information
- Reset Your Brother Machine
- Paper Handling and Printing Problems
- Telephone and Fax Problems
- Other Problems
- Network Problems
- Google Cloud Print Problems
- AirPrint Problems

Error and Maintenance Messages

As with any sophisticated office product, errors may occur and supply items may have to be replaced. If this happens, your machine identifies the error or required routine maintenance and shows the appropriate message. The most common error and maintenance messages are shown in the table.

You can correct most errors and perform routine maintenance yourself. If you need more tips, go to your model's **FAQs & Troubleshooting** page on the Brother Solutions Center at support.brother.com.

- (MFC-J890DW)

  If the touchscreen displays errors and your Android™ device supports the NFC feature, touch your device to the NFC symbol on the control panel to access the Brother Solutions Center and browse the latest FAQs from your device. (Your mobile telephone provider's message and data rates may apply.)

  Make sure the NFC settings of both your Brother machine and your Android™ device are set to On.
- *Related Information* references are at the bottom of this page.

DCP-J572DW/MFC-J491DW

Error Message	Cause	Action
Absorber NearFull	The ink absorber box is nearly full.	The ink absorber box must be replaced soon. Contact Brother customer service or your local Brother dealer. • The ink absorber box absorbs the small amount of ink emitted during print head cleaning.
B&W Print Only Replace Ink	One or more of the colour ink cartridges have reached the end of their lives. You can use the machine in monochrome mode for approximately four weeks depending on the number of pages you print. While this message appears on the LCD, each operation works in the following way: • Printing If the media type is set to **Plain Paper** in the **Basic** tab, and **Greyscale** is selected in the **Advanced** tab of the printer driver, you can use the machine as a monochrome printer. • Copying If the paper type is set to Plain Paper, you can make copies in monochrome. • Faxing If the paper type is set to Plain Paper, the machine will receive and print the faxes in monochrome.	Replace the ink cartridges. See *Related Information*: *Replace the Ink Cartridges*. Although the Cause column lists options for using the machine after this error appears, you will not be able to use the machine until you replace the ink cartridge(s) under the following conditions: • If you unplug the machine or remove the ink cartridge. • If you select the **Slow Drying Paper** option on the machine or in the printer driver.
Cannot Detect	You installed a new ink cartridge too quickly and the machine did not detect it.	Take out the new ink cartridge and reinstall it slowly and firmly until it locks into place. See *Related Information*: *Replace the Ink Cartridges*.
	An ink cartridge is not installed correctly.	
	A used ink cartridge was reinstalled.	Remove the used ink cartridge and install a new one.

Error Message	Cause	Action
	If you are using non Brother Original ink, the machine may not detect the ink cartridge.	Replace the cartridge with a Brother Original ink cartridge. If the error message remains, contact Brother customer service or your local Brother dealer.
	The ink cartridge must be replaced.	Replace the cartridge with a Brother Original ink cartridge.
	The new ink cartridge has an air bubble.	Slowly turn the ink cartridge so that the ink supply port is pointing downwards, and then reinstall the cartridge.
	The wrong Brother model ink cartridge was installed.	Check the model numbers of the ink cartridges and install the correct ink cartridges.
Cannot Detect Ink	If you are using non Brother Original ink, the machine may not detect the ink volume.	Replace the cartridge with a Brother Original ink cartridge. If the error message remains, contact Brother customer service or your local Brother dealer.
Comm. Error	Poor telephone line quality caused a communication error.	Send the fax again or connect the machine to another telephone line. If the problem continues, contact the telephone company and ask them to check your telephone line.
Connection Error	Other devices are trying to connect to the Wi-Fi Direct network at the same time.	Make sure there are no other devices trying to connect to the Wi-Fi Direct network, and then try to configure the Wi-Fi Direct settings again.
Connection Failed	The Brother machine and your mobile device cannot communicate during the Wi-Fi Direct network configuration.	• Move the mobile device closer to your Brother machine. • Move your Brother machine and the mobile device to an obstruction-free area. • If you are using the PIN Method of WPS, make sure you have entered the correct PIN.
Cover is Open.	The scanner cover is not locked in the closed position.	Lift the scanner cover and then close it again.
		Make sure the USB or network cable (if used) have been guided correctly through the cable channel and out the back of the machine.
	The ink cartridge cover is not locked in the closed position.	Firmly close the ink cartridge cover until it locks into place.
Data Remaining	Print data is left in the machine's memory.	Press **Stop/Exit**. The machine will cancel the job and clear it from the memory. Try to print again.
Disconnected	The other person or other person's fax machine stopped the call.	Try to send or receive again. If calls are stopped repeatedly and you are using a VoIP (Voice over IP) system, try changing the Compatibility to Basic (for VoIP). See *Related Information*: *Telephone Line Interference/VoIP*.
Document Jam	The document was not inserted or fed correctly, or the document scanned from the ADF was too long.	Remove the jammed document, and then press **Stop/Exit**. Set the document in the ADF correctly.

Error Message	Cause	Action
		See *Related Information*: *Load Documents in the Automatic Document Feeder (ADF)*. See *Related Information*: *Document Jams*.
DR Mode in Use	The machine is in Distinctive Ring mode. You cannot change the Receive Mode from Manual to another mode.	Set Distinctive Ring to Off. See *Related Information*: *Turn off Distinctive Ring*.
FaxAbility On	The machine is in FaxAbility mode. You cannot change the Receive Mode from Manual to another mode.	Set FaxAbility to Off. See *Related Information*: *Turn FaxAbility Off or On*.
High Temperature	The room temperature is too high.	After cooling the room, allow the machine to cool down to room temperature. Try again when the machine has cooled down.
Ink Absorber Full	The ink absorber box is full. These components are periodic maintenance items that may require replacement after a period of time to ensure optimum performance from your Brother machine. Because these components are periodic maintenance items, the replacement is not covered under the warranty. The need to replace these items and the time period before replacement is dependent on the number of purges and flushes required to clean the ink system. These boxes acquire amounts of ink during the different purging and flushing operations. The number of times a machine purges and flushes for cleaning varies depending on different situations. For example, frequently powering the machine on and off will cause numerous cleaning cycles since the machine automatically cleans upon power up. The use of non-Brother ink may cause frequent cleanings because non-Brother ink could cause poor print quality which is resolved by cleaning. The more cleaning the machine requires, the faster these boxes will fill up. **Repairs resulting from the use of non-Brother supplies may not be covered under the stated product warranty.**	The ink absorber box must be replaced. Contact Brother customer service or your local Brother Authorised Service Centre to have your machine serviced.
Ink Low	One or more of the ink cartridges are near the end of their lives. If the sending machine has the ability to convert it, the colour fax will be printed at your machine as a monochrome fax.	Order a new ink cartridge. You can continue printing until the LCD displays Replace Ink. See *Related Information*: *Replace the Ink Cartridges*. • **You can still scan even if the ink is low or needs to be replaced.**
Jam A Inside/Front Repeat Jam A	The paper is jammed in the machine. (DCP-J572DW) • More than one sheet of paper was placed in the manual feed slot. • Another sheet of paper was placed in the manual feed slot before the LCD	Remove the jammed paper. See *Related Information*: *Paper is Jammed Inside and in the Front of the Machine (Jam A Inside/Front)*. Make sure the paper length guide is set to the correct paper size.

Error Message	Cause	Action
	displayed `Where to Place the Paper`.	DO NOT extend the paper tray when you load A5 or smaller size paper. (for some countries) (DCP-J572DW) Do not put more than one sheet of paper in the manual feed slot at any one time. Wait until the LCD displays `Where to Place the Paper` before you feed the next sheet of paper in the manual feed slot.
`Jam B Front` `Repeat Jam B Front`	The paper is jammed in the machine.	Remove the jammed paper. See *Related Information*: *Paper is Jammed in the Front of the Machine (Jam B Front)*. Make sure the paper length guide is set to the correct paper size. DO NOT extend the paper tray when you load A5 or smaller size paper. (for some countries)
`Jam C Rear`	The paper is jammed in the machine.	Remove the jammed paper. See *Related Information*: *Paper is Jammed in the Back of the Machine (Jam C Rear)*. Make sure the paper guides are set to the correct paper size. DO NOT extend the paper tray when you load A5 or smaller size paper. (for some countries)
	Paper dust has accumulated on the surface of the paper pick-up rollers.	Clean the paper pick-up rollers. See *Related Information*: *Clean the Paper Pick-up Rollers*.
`Low Temperature`	The room temperature is too low.	After warming the room, allow the machine to warm up to room temperature. Try again when the machine has warmed up.
`Media card error`	Multiple data storage devices were in the machine when it was turned on. The machine can read only one memory card or USB flash drive at a time.	Remove the memory card(s) or USB flash drive that you are not using.
`Media Error`	The memory card is either corrupted, incorrectly formatted, or there is a problem with the memory card.	Remove the memory card from the media drive (slot) of the machine and format it correctly.
		Put the card firmly into the slot again to make sure it is in the correct position. If the error remains, check the media drive (slot) of the machine by putting in another memory card that you know is working.
`Media is Full.`	The memory card or USB flash drive you are using already contains 999 files.	Your machine can only save to your memory card or USB flash drive if it contains fewer than 999 files. Delete unused files and try again.
	The memory card or USB flash drive you are using does not have enough free space to scan the document.	Delete unused files from your memory card or USB flash drive to make some free space, and then try again.
`No Caller ID`	There is no incoming call history. You did not receive calls or you have not	To use the Caller ID feature, contact your telephone company. See *Related Information*: *Caller ID*.

Error Message	Cause	Action
	subscribed to the Caller ID service from your telephone company.	
No Device	When configuring the Wi-Fi Direct network, the Brother machine cannot find your mobile device.	• Make sure your machine and mobile device are in the Wi-Fi Direct mode. • Move the mobile device closer to your Brother machine. • Move your Brother machine and the mobile device to an obstruction-free area. • If you are manually configuring the Wi-Fi Direct network, make sure you have entered the correct password. • If your mobile device has a configuration page for how to obtain an IP address, make sure the IP address of your mobile device has been configured via DHCP.
No File	The memory card or USB flash drive in the media drive does not contain a .JPG file.	Put the correct memory card or USB flash drive into the slot again.
No Ink Cartridge	An ink cartridge is not installed correctly.	Remove the new ink cartridge and re-install it slowly and firmly until it locks into place. See *Related Information*: *Replace the Ink Cartridges*.
No Paper Fed	The machine is out of paper or paper is not correctly loaded in the paper tray.	Do one of the following: • Refill the paper tray, and then press ▶. • Remove and reload the paper, and then press ▶. See *Related Information*: *Load Paper*.
	(DCP-J572DW) The paper was not inserted in the centre position of the manual feed slot.	Remove the paper and reinsert it in the centre of the manual feed slot, and then follow the LCD instructions. See *Related Information*: *Load Paper in the Manual Feed Slot*.
	The Jam Clear Cover is not closed correctly.	Make sure the Jam Clear Cover is closed evenly at both ends. See *Related Information*: *Printer Jam or Paper Jam*.
	Paper dust has accumulated on the surface of the paper pick-up rollers.	Clean the paper pick-up rollers. See *Related Information*: *Clean the Paper Pick-up Rollers*.
No Paper Fed Again	Paper dust has accumulated on the surface of the paper pick-up rollers.	Clean the paper pick-up rollers. See *Related Information*: *Clean the Paper Pick-up Rollers*.
No Response/Busy	The number you dialled does not answer or is busy.	Verify the number and try again.
Not Registered	You tried to access a Speed Dial number that has not been stored in the machine.	Set up the Speed Dial number.
Out of Fax Memory	The fax memory is full.	Print the faxes that are in the memory. See *Related Information*: *Print a Fax Stored in the Machine's Memory*.
Out of Memory	The machine's memory is full.	If a fax-sending or copy operation is in progress:

Error Message	Cause	Action
		• Press **Stop/Exit** and wait until the other operations that are in progress finish, and then try again. • Press ▶ to select `Partial Print` to copy the pages scanned so far. • Print the faxes that are in the memory. See *Related Information*: *Print a Fax Stored in the Machine's Memory*.
`Paper Size Mismatch`	The paper size setting does not match the size of paper in the tray. **-OR-** You did not set the paper guides in the tray to the indicators for the paper size you are using.	1. Check that the paper size you chose on the machine's display matches the size of the paper in the tray. See *Related Information*: *Change the Paper Size and Paper Type*. 2. Make sure you loaded the paper in a Portrait position, by setting the paper guides at the indicators for your paper size. See *Related Information*: *Load Paper*. 3. After you have checked the paper size and the paper position, press ▶.
		If you are printing from your computer, make sure the paper size you chose in the printer driver matches the size of paper in the tray. See *Related Information*: *Print Settings (Windows)* or *Print Options (Mac)*.
`Replace Ink`	One or more of the ink cartridges have reached the end of their lives. The machine will stop all print operations. While memory is available, monochrome faxes will be stored in the memory. If the sending machine has the ability to convert it, the colour fax will be stored in the memory as a monochrome fax.	Replace the ink cartridges. See *Related Information*: *Replace the Ink Cartridges*. • You can still scan even if the ink is low or needs to be replaced.
`The maximum number of devices are already connected using Wi-Fi Direct.`	The maximum number of mobile devices are already connected to the Wi-Fi Direct network when the Brother machine is the Group Owner (G/O).	After the current connection between your Brother machine and another mobile device has shut down, try to configure the Wi-Fi Direct settings again. You can confirm the connection status by printing the Network Configuration Report. See *Related Information*: *Print the Network Configuration Report*.
`Tray not detected`	The paper tray is not completely inserted.	Slowly push the paper tray completely into the machine.
	Paper or a foreign object has prevented the paper tray from being inserted correctly.	Pull the paper tray out of the machine, and remove the jammed paper or foreign object. If you cannot find or remove the jammed paper, see *Related Information*: *Printer Jam or Paper Jam*.
`Tray Settings`	This message is displayed when the setting to confirm the paper type and size is enabled.	To not display this confirmation message, change the setting to Off. See *Related Information*: *Change the Check Paper Size Setting*.

`Unable to Clean XX`
`Unable to Init. XX`
`Unable to Print XX`
	The machine has a mechanical problem.
	-OR-
		Open the scanner cover and remove any foreign objects and paper scraps from inside the machine. If the error message continues, disconnect the machine from

Error Message	Cause	Action
	A foreign object, such as a paper clip or a piece of ripped paper, is in the machine.	the power for several minutes, and then reconnect it. See *Related Information*: *Paper is Jammed Inside and in the Front of the Machine (Jam A Inside/Front)*. If you cannot print received faxes, transfer them to another fax machine or to your computer before disconnecting the machine so you will not lose any important messages. Then, disconnect the machine from the power for several minutes and reconnect it. See *Related Information*: *Transfer Your Faxes or Fax Journal Report*.
`Unable to Scan XX`	The machine has a mechanical problem.	Disconnect the machine from the power for several minutes, and then reconnect it. If you cannot print received faxes, transfer them to another fax machine or to your computer before disconnecting the machine so you will not lose any important messages. Then, disconnect the machine from the power for several minutes and reconnect it. See *Related Information*: *Transfer Your Faxes or Fax Journal Report*.
`Wrong Ink Cartridge`	The ink cartridge model number is not compatible with your machine.	Verify whether the cartridge model number will work with your machine.
`Wrong Ink Colour`	An ink cartridge has been installed in the wrong position.	Check which ink cartridges are not matched by colour to their ink cartridge positions and move them to their correct positions.

DCP-J772DW/MFC-J690DW/MFC-J890DW

Error Message	Cause	Action
`B&W 1-sided Print Only` `Replace ink.`	One or more of the colour ink cartridges have reached the end of their lives. You can use the machine in monochrome mode for approximately four weeks depending on the number of pages you print. While this message appears on the touchscreen, each operation works in the following way: • Printing If the media type is set to **Plain Paper** in the **Basic** tab, and **Greyscale** is selected in the **Advanced** tab of the printer driver, you can use the machine as a monochrome printer. • Copying If the paper type is set to `Plain Paper`, you can make copies in monochrome. • Faxing	Replace the ink cartridges. See *Related Information*: *Replace the Ink Cartridges*. Although the Cause column lists options for using the machine after this error appears, you may not be able to use the machine until you replace the ink cartridge(s) under the following conditions: • If you unplug the machine or remove the ink cartridge. • If you select the **Slow Drying Paper** option on the machine or in the printer driver.

Error Message	Cause	Action
	If the paper type is set to `Plain Paper`, the machine will receive and print the faxes in monochrome.	
`Cannot Detect`	You installed a new ink cartridge too quickly and the machine did not detect it.	Take out the new ink cartridge and reinstall it slowly and firmly until it locks into place. See *Related Information*: *Replace the Ink Cartridges*.
	An ink cartridge is not installed correctly.	
	A used ink cartridge was reinstalled.	Remove the used ink cartridge and install a new one.
	If you are using non Brother Original ink, the machine may not detect the ink cartridge.	Replace the cartridge with a Brother Original ink cartridge. If the error message remains, contact Brother customer service or your local Brother dealer.
	The ink cartridge must be replaced.	Replace the cartridge with a Brother Original ink cartridge.
	The wrong Brother model ink cartridge was installed.	Check the model numbers of the ink cartridges and install the correct ink cartridges.
`Cannot Detect Ink Volume`	If you are using non Brother Original ink, the machine may not detect the ink volume.	Replace the cartridge with a Brother Original ink cartridge. If the error message remains, contact Brother customer service or your local Brother dealer.
`Comm.Error`	Poor telephone line quality caused a communication error.	Send the fax again or connect the machine to another telephone line. If the problem continues, contact the telephone company and ask them to check your telephone line.
`Connection Error`	Other devices are trying to connect to the Wi-Fi Direct network at the same time.	Make sure there are no other devices trying to connect to the Wi-Fi Direct network, and then try to configure the Wi-Fi Direct settings again.
`Connection Failed`	The Brother machine and your mobile device cannot communicate during the Wi-Fi Direct network configuration.	• Move the mobile device closer to your Brother machine. • Move your Brother machine and the mobile device to an obstruction-free area. • If you are using the PIN Method of WPS, make sure you have entered the correct PIN.
`Cover is Open.`	The scanner cover is not locked in the closed position.	Lift the scanner cover and then close it again.
		Make sure the telephone line cord and interface cable (if used) have been guided correctly through the cable channel and out the back of the machine.
	The ink cartridge cover is not locked in the closed position.	Firmly close the ink cartridge cover until it locks into place.
`Data Remaining in Memory`	Print data is left in the machine's memory.	Press . The machine will cancel the job and clear it from the memory. Try to print again.
`Disconnected`	The other person or other person's fax machine stopped the call.	Try to send or receive again. If calls are stopped repeatedly and you are using a VoIP (Voice over IP) system,

Error Message	Cause	Action
		try changing the Compatibility to Basic (for VoIP). See *Related Information*: *Telephone Line Interference/VoIP*.
Document Jam/too Long	The document was not inserted or fed correctly, or the document scanned from the ADF was too long.	Remove the jammed document, and then press . Set the document in the ADF correctly. See *Related Information*: *Load Documents in the Automatic Document Feeder (ADF)*. See *Related Information*: *Document Jams*.
DR Mode in Use	The machine is in Distinctive Ring mode. You cannot change the Receive Mode from Manual to another mode.	Set Distinctive Ring to Off. See *Related Information*: *Turn off Distinctive Ring*.
FaxAbility On	The machine is in FaxAbility mode. You cannot change the Receive Mode from Manual to another mode.	Set FaxAbility to Off. See *Related Information*: *Turn FaxAbility Off or On*.
High Temperature	The room temperature is too high.	After cooling the room, allow the machine to cool down to room temperature. Try again when the machine has cooled down.
Hub is Unusable.	A hub or USB flash drive with hub has been connected to the USB direct interface.	Hubs, including a USB flash drive with a built-in hub, are not supported. Unplug the device from the USB direct interface.
Ink Absorber NearFull	The ink absorber box is nearly full.	The ink absorber box must be replaced soon. Contact Brother customer service or your local Brother dealer. • The ink absorber box absorbs the small amount of ink emitted during print head cleaning.
Ink Absorber Pad Full	The ink absorber box is full. These components are periodic maintenance items that may require replacement after a period of time to ensure optimum performance from your Brother machine. Because these components are periodic maintenance items, the replacement is not covered under the warranty. The need to replace these items and the time period before replacement is dependent on the number of purges and flushes required to clean the ink system. These boxes acquire amounts of ink during the different purging and flushing operations. The number of times a machine purges and flushes for cleaning varies depending on different situations. For example, frequently powering the machine on and off will cause numerous cleaning cycles since the machine automatically cleans upon power up. The use of non-Brother ink may cause frequent cleanings because non-Brother ink could cause poor print quality which is resolved by cleaning. The more cleaning the machine requires, the faster these boxes will fill up.	The ink absorber box must be replaced. Contact Brother customer service or your local Brother Authorised Service Centre to have your machine serviced.

Error Message	Cause	Action
	Repairs resulting from the use of non-Brother supplies may not be covered under the stated product warranty.	
Ink Low	One or more of the ink cartridges are near the end of their lives. If the sending machine has the ability to convert it, the colour fax will be printed at your machine as a monochrome fax.	Order a new ink cartridge. You can continue printing until the touchscreen displays Replace Ink. See *Related Information*: *Replace the Ink Cartridges*. • **You can still scan even if the ink is low or needs to be replaced.**
Jam A Inside/Front Repeat Jam A Inside/ Front	The paper is jammed in the machine.	Remove the jammed paper. See *Related Information*: *Paper is Jammed Inside and in the Front of the Machine (Jam A Inside/Front)*. Make sure the paper guides are set to the correct paper size. DO NOT extend the paper tray when you load A5 or smaller size paper.
	More than one sheet of paper was placed in the manual feed slot. **-OR-** Another sheet of paper was placed in the manual feed slot before the touchscreen displayed Where to Place the Paper.	Do not put more than one sheet of paper in the manual feed slot at any one time. Wait until the touchscreen displays Where to Place the Paper before you feed the next sheet of paper in the manual feed slot. Remove the jammed paper. See *Related Information*: *Paper is Jammed Inside and in the Front of the Machine (Jam A Inside/Front)*.
Jam B Front Repeat Jam B Front	The paper is jammed in the machine.	Remove the jammed paper. See *Related Information*: *Paper is Jammed in the Front of the Machine (Jam B Front)*. Make sure the paper guides are set to the correct paper size. DO NOT extend the paper tray when you load A5 or smaller size paper.
Jam C Rear	The paper is jammed in the machine.	Remove the jammed paper. See *Related Information*: *Paper is Jammed in the Back of the Machine (Jam C Rear)*. Make sure the paper guides are set to the correct paper size. DO NOT extend the paper tray when you load A5 or smaller size paper.
	Paper dust has accumulated on the surface of the paper pick-up rollers.	Clean the paper pick-up rollers. See *Related Information*: *Clean the Paper Pick-up Rollers*.
Low Temperature	The room temperature is too low.	After warming the room, allow the machine to warm up to room temperature. Try again when the machine has warmed up.
Media card error	Multiple data storage devices were in the machine when it was turned on. The machine can read only one memory card or USB flash drive at a time.	Remove the memory card(s) or USB flash drive that you are not using.

Error Message	Cause	Action
Media Error	The memory card is either corrupted, incorrectly formatted, or there is a problem with the memory card.	Remove the memory card from the media drive (slot) of the machine and format it correctly.
		Put the card firmly into the slot again to make sure it is in the correct position. If the error remains, check the media drive (slot) of the machine by putting in another memory card that you know is working.
Media is Full.	The memory card or USB flash drive you are using already contains 999 files.	Your machine can only save to your memory card or USB flash drive if it contains fewer than 999 files. Delete unused files and try again.
	The memory card or USB flash drive you are using does not have enough free space to scan the document.	Delete unused files from your memory card or USB flash drive to make some free space, and then try again.
No Caller ID	There is no incoming call history. You did not receive calls or you have not subscribed to the Caller ID service from your telephone company.	To use the Caller ID feature, contact your telephone company. See *Related Information*: *Caller ID*.
No Device	When configuring the Wi-Fi Direct network, the Brother machine cannot find your mobile device.	• Make sure your machine and mobile device are in the Wi-Fi Direct mode. • Move the mobile device closer to your Brother machine. • Move your Brother machine and the mobile device to an obstruction-free area. • If you are manually configuring the Wi-Fi Direct network, make sure you have entered the correct password. • If your mobile device has a configuration page for how to obtain an IP address, make sure the IP address of your mobile device has been configured via DHCP.
No File	The memory card or USB flash drive in the media drive does not contain a .JPG file.	Put the correct memory card or USB flash drive into the slot again.
No Ink Cartridge	An ink cartridge is not installed correctly.	Remove the new ink cartridge and re-install it slowly and firmly until it locks into place. See *Related Information*: *Replace the Ink Cartridges*.
No Paper Fed	The machine is out of paper or paper is not correctly loaded in the paper tray.	Do one of the following: • Refill the paper tray, and then follow the LCD instructions. • Remove and reload the paper, and then follow the LCD instructions. See *Related Information*: *Load Paper*.
	The paper was not inserted in the centre position of the manual feed slot.	Remove the paper and reinsert it in the centre of the manual feed slot, and then follow the LCD instructions. See *Related Information*: *Load Paper in the Manual Feed Slot*.
	The Jam Clear Cover is not closed correctly.	Make sure the Jam Clear Cover is closed evenly at both ends.

Error Message	Cause	Action
		See *Related Information*: *Printer Jam or Paper Jam*.
	Paper dust has accumulated on the surface of the paper pick-up rollers.	Clean the paper pick-up rollers. See *Related Information*: *Clean the Paper Pick-up Rollers*.
`No Response/Busy`	The number you dialled does not answer or is busy.	Verify the number and try again.
`Out of Fax Memory`	The fax memory is full.	Do one of the following: • Clear the data from the memory. To gain extra memory, you can turn off Memory Receive. See *Related Information*: *Turn Off Memory Receive*. • Print the faxes that are in the memory. See *Related Information*: *Print a Fax Stored in the Machine's Memory*.
`Out of Memory`	The machine's memory is full.	If a fax-sending or copy operation is in progress: • Press or `Quit` or `Close` and wait until the other operations that are in progress finish, and then try again. • Press `Partial Print` to copy the pages scanned so far. • Clear the data in the memory. To gain extra memory, you can turn Memory Receive off. See *Related Information*: *Turn Off Memory Receive*. • Print the faxes stored in the memory. See *Related Information*: *Print a Fax Stored in the Machine's Memory*.
`Paper Size Mismatch`	The paper size setting does not match the size of paper in the tray. **-OR-** You did not set the paper guides in the tray to the indicators for the paper size you are using.	1. Check that the paper size you selected on the machine's display matches the size of the paper in the tray. See *Related Information*: *Change the Paper Size and Paper Type*. 2. Make sure you loaded the paper in the correct orientation and set the paper guides at the indicators for your paper size. See *Related Information*: *Load Paper*. 3. After you have checked the paper size and the paper orientation, follow the LCD instructions.
		If printing from your computer, make sure the paper size you selected in the printer driver matches the size of paper in the tray. See *Related Information*: *Print Settings (Windows)* or *Print Options (Mac)*.
`Paper Tray not detected`	The paper tray is not completely inserted.	Slowly push the paper tray completely into the machine.

Error Message	Cause	Action
	Paper or a foreign object has prevented the paper tray from being inserted correctly.	Pull the paper tray out of the machine, and remove the jammed paper or foreign object. If you cannot find or remove the jammed paper, see *Related Information*: *Printer Jam or Paper Jam*.
Repetitive No Paper Fed	Paper dust has accumulated on the surface of the paper pick-up rollers.	Clean the paper pick-up rollers. See *Related Information*: *Clean the Paper Pick-up Rollers*.
Replace Ink	One or more of the ink cartridges have reached the end of their lives. The machine will stop all print operations. While memory is available, monochrome faxes will be stored in the memory. If the sending machine has the ability to convert it, the colour fax will be stored in the memory as a monochrome fax.	Replace the ink cartridges. See *Related Information*: *Replace the Ink Cartridges*. • You can still scan even if the ink is low or needs to be replaced.
The maximum number of devices are already connected using Wi-Fi Direct.	The maximum number of mobile devices are already connected to the Wi-Fi Direct network when the Brother machine is the Group Owner (G/O).	After the current connection between your Brother machine and another mobile device has shut down, try to configure the Wi-Fi Direct settings again. You can confirm the connection status by printing the Network Configuration Report. See *Related Information*: *Print the Network Configuration Report*.
Touchscreen Init. Failed	The touchscreen was pressed before the power on initialisation was completed.	Make sure nothing is touching or resting on the touchscreen, especially when plugging the machine in.
	Debris may be stuck between the lower part of the touchscreen and its frame.	Insert a piece of stiff paper between the lower part of the touchscreen and its frame and slide it back and forth to push out the debris.
Tray Settings	This message is displayed when the setting to confirm the paper type and size is enabled.	To not display this confirmation message, change the setting to Off. See *Related Information*: *Change the Check Paper Size Setting*.
Unable to Clean XX Unable to Initialize XX Unable to Print XX	The machine has a mechanical problem. **-OR-** A foreign object, such as a paper clip or a piece of ripped paper, is in the machine.	Open the scanner cover and remove any foreign objects and paper scraps from inside the machine. If the error message continues, disconnect the machine from the power for several minutes, and then reconnect it. See *Related Information*: *Paper is Jammed Inside and in the Front of the Machine (Jam A Inside/Front)*. (MFC-J690DW) If you cannot print received faxes, transfer them to another fax machine or to your computer before disconnecting the machine so you will not lose any important messages. Then, disconnect the machine from the power for several minutes and reconnect it. (MFC-J890DW) If you cannot print received faxes, transfer them to another fax machine or to your computer. See *Related Information*: *Transfer Your Faxes or Fax Journal Report*.
Unable to Scan XX	The machine has a mechanical problem.	Disconnect the machine from the power for several minutes, and then reconnect it.

Error Message	Cause	Action
		(MFC-J690DW) If you cannot print received faxes, transfer them to another fax machine or to your computer before disconnecting the machine so you will not lose any important messages. Then, disconnect the machine from the power for several minutes and reconnect it. (MFC-J890DW) If you cannot print received faxes, transfer them to another fax machine or to your computer. See *Related Information*: *Transfer Your Faxes or Fax Journal Report*.
Unusable Device Disconnect device from front connector & turn machine off & then on	A broken device is connected to the USB direct interface.	Unplug the device from the USB direct interface, then press to turn the machine off and then on again.
Unusable Device Please disconnect USB device.	A USB device or USB flash drive that is not supported has been connected to the USB direct interface.	Unplug the device from the USB direct interface. Turn the machine off and then on again.
Wrong Ink Cartridge	The ink cartridge model number is not compatible with your machine.	Verify whether the cartridge model number will work with your machine.
Wrong Ink Colour	An ink cartridge has been installed in the wrong position.	Check which ink cartridges are not matched by colour to their ink cartridge positions and move them to their correct positions.

Related Information

- Troubleshooting
- Transfer Your Faxes or Fax Journal Report
- Error Messages When Using the Brother Web Connect Feature
- Touchscreen LCD Overview
- Print the Network Configuration Report
- Replace the Ink Cartridges
- Change the Check Paper Size Setting
- Telephone Line Interference/VoIP
- Load Documents in the Automatic Document Feeder (ADF)
- Document Jams
- Turn FaxAbility Off or On
- Turn off Distinctive Ring
- Caller ID
- Load Paper
- Load Paper in the Manual Feed Slot
- Printer Jam or Paper Jam
- Clean the Paper Pick-up Rollers
- Turn Off Memory Receive
- Print a Fax Stored in the Machine's Memory
- Change the Paper Size and Paper Type
- Print Settings (Windows)
- Print Options (Mac)

- Paper is Jammed Inside and in the Front of the Machine (Jam A Inside/Front)
- Paper is Jammed in the Front of the Machine (Jam B Front)
- Paper is Jammed in the Back of the Machine (Jam C Rear)
- Paper Handling and Printing Problems

Transfer Your Faxes or Fax Journal Report

Related Models: MFC-J491DW/MFC-J690DW/MFC-J890DW

If the LCD shows:

- `[Unable to Clean XX]`
- `[Unable to Initialize XX]`
- `[Unable to Print XX]`
- `[Unable to Scan XX]`

We recommend transferring your faxes to another fax machine or to your computer.

See *Related Information*: *Transfer Faxes to Another Fax Machine*.

See *Related Information*: *Transfer Faxes to Your Computer*.

You can also transfer the Fax Journal report to see if there are any faxes you must transfer.

See *Related Information*: *Transfer the Fax Journal Report to Another Fax Machine*.

Related Information

- Error and Maintenance Messages
- Transfer Faxes to Another Fax Machine
- Transfer Faxes to Your Computer
- Transfer the Fax Journal Report to Another Fax Machine
- Use PC-Fax Receive to Transfer Received Faxes to Your Computer (Windows only)
- Reset the Network Settings to Factory Default
- Reset Your Brother Machine
- Reset Functions Overview

Transfer Faxes to Another Fax Machine

Related Models: MFC-J491DW/MFC-J690DW/MFC-J890DW

If you have not set up your Station ID, you cannot enter Fax Transfer mode.

>> MFC-J491DW
>> MFC-J690DW/MFC-J890DW

MFC-J491DW

1. Press **Stop/Exit** to interrupt the error temporarily.
2. Press **Settings**.
3. Press ▲ or ▼ to select the following:
   a. Select `[Service]`. Press **OK**.
   b. Select `[Data Transfer]`. Press **OK**.
   c. Select `[Fax Transfer]`. Press **OK**.
4. Do one of the following:
   - If the LCD displays `[No Data]`, there are no faxes left in the machine's memory.
     Press ▶, and then press **Stop/Exit**.
   - Enter the fax number where faxes will be forwarded.
5. Press **Mono Start**.

MFC-J690DW/MFC-J890DW

1. Press to interrupt the error temporarily.
2. Press `[Settings]` > `[All Settings]` > `[Service]` > `[Data Transfer]` > `[Fax Transfer]`.
3. Do one of the following:
   - If the touchscreen displays `[No Data]`, there are no faxes left in the machine's memory.
     Press `[Close]`, and then press .
   - Enter the fax number where faxes will be forwarded.
4. Press `[Fax Start]`.

Related Information

- Transfer Your Faxes or Fax Journal Report
- Set Your Station ID

Transfer Faxes to Your Computer

Related Models: MFC-J491DW/MFC-J690DW/MFC-J890DW

You can transfer the faxes from your machine's memory to your computer.

>> MFC-J491DW
>> MFC-J690DW/MFC-J890DW

MFC-J491DW

1. Press **Stop/Exit** to interrupt the error temporarily.
2. Make sure you have installed Brother software and drivers on your computer, and then turn on **PC-FAX Receive** on the computer. Do one of the following:
   - Windows 7

     From the (**Start**) menu, select **All Programs** > **Brother** > **Brother Utilities**.

     Click the drop-down list and select your model name (if not already selected). Click **PC-FAX** in the left navigation bar, and then click **Receive**.
   - Windows 8 and Windows 10

     Launch (**Brother Utilities**), and then click the drop-down list and select your model name (if not already selected). Click **PC-FAX** in the left navigation bar, and then click **Receive**.
3. Read and confirm the instructions on your computer.

   Faxes in the machine's memory will be sent to your computer automatically.

When faxes in the machine's memory are not sent to your computer:

Make sure you have set `[PC Fax Receive]` on the machine.

Press ▲ or ▼ to select `[Backup Print: On]` or `[Backup Print: Off]`. Press **OK**.

If faxes are in the machine's memory when you set up PC-Fax Receive, the LCD will ask if you want to transfer the faxes to your computer.

Press ▶ to transfer all faxes in the memory to your computer.

MFC-J690DW/MFC-J890DW

1. Press to interrupt the error temporarily.
2. Make sure you have installed the Brother software and drivers on your computer, and then turn on **PC-FAX Receive** on the computer. Do one of the following:
   - Windows 7

     From the (**Start**) menu, select **All Programs** > **Brother** > **Brother Utilities**.

     Click the drop-down list and select your model name (if not already selected). Click **PC-FAX** in the left navigation bar, and then click **Receive**.
   - Windows 8 and Windows 10

     Click (**Brother Utilities**), and then click the drop-down list and select your model name (if not already selected). Click **PC-FAX** in the left navigation bar, and then click **Receive**.
3. Read and confirm the instructions on your computer.

   Faxes in the machine's memory will be sent to your computer automatically.

When faxes in the machine's memory are not sent to your computer:

Make sure you have set [PC Fax Receive] on the machine.

If faxes are in the machine's memory when you set up PC-Fax Receive, the touchscreen will ask if you want to transfer the faxes to your computer.

(MFC-J890DW) If Fax Preview is set to Off, you will be asked if you want to print backup copies.

Press [Yes] to transfer all faxes in the memory to your computer.

Related Information

- Transfer Your Faxes or Fax Journal Report
- Use PC-Fax Receive to Transfer Received Faxes to Your Computer (Windows only)

Transfer the Fax Journal Report to Another Fax Machine

Related Models: MFC-J491DW/MFC-J690DW/MFC-J890DW

If you have not set up your Station ID, you cannot enter fax transfer mode.

>> MFC-J491DW
>> MFC-J690DW/MFC-J890DW

MFC-J491DW

1. Press **Stop/Exit** to interrupt the error temporarily.
2. Press **Settings**.
3. Press ▲ or ▼ to select the following:
   a. Select `[Service]`. Press **OK**.
   b. Select `[Data Transfer]`. Press **OK**.
   c. Select `[Report Transfer]`. Press **OK**.
4. Enter the fax number where Fax Journal report will be forwarded.
5. Press **Mono Start**.

MFC-J690DW/MFC-J890DW

1. Press to interrupt the error temporarily.
2. Press `[Settings]` > `[All Settings]` > `[Service]` > `[Data Transfer]` > `[Report Transfer]`.
3. Enter the fax number where the Fax Journal report will be forwarded.
4. Press `[Fax Start]`.

Related Information

- Transfer Your Faxes or Fax Journal Report
- Set Your Station ID

Error Messages When Using the Brother Web Connect Feature

Your Brother machine displays an error message if an error occurs. The most common error messages are shown in the following chart.

You can correct most errors yourself. If you need more tips, go to your model's **FAQs & Troubleshooting** page on the Brother Solutions Center at support.brother.com.

Connection Error

Error Messages	Cause	Action
(DCP-J572DW/MFC-J491DW) Connection Error 02 Network is not connected. Check that the machine is connected to the network. (DCP-J772DW/MFC-J690DW/ MFC-J890DW) Connection Error 02 Network is not connected. Check that the machine is connected to the network.	The machine is not connected to a network.	• Verify that the network connection is good. • If the Web or Apps option was pressed soon after the machine was turned on, the network connection may not have been established yet. Wait and try again.
(DCP-J572DW/MFC-J491DW) Connection Error 03 Connection failed to server. Check network settings. (DCP-J772DW/MFC-J690DW/ MFC-J890DW) Connection Error 03 Connection failed to server. Check network settings.	• Network or server settings are incorrect. • There is a problem with the network or server.	• Confirm that network settings are correct, or wait and try again later. • If the Web or Apps option was pressed soon after the machine was turned on, the network connection may not have been established yet. Wait and try again.
(DCP-J572DW/MFC-J491DW) Connection Error 07 Connection failed to server. Set the correct Date&Time. (DCP-J772DW/MFC-J690DW/ MFC-J890DW) Connection Error 07 Connection failed to server. Set the correct Date&Time.	Date and time settings are incorrect.	Set the date and time correctly. Note that if the machine's power cord is disconnected, the date and time settings may have reset to factory settings.

Authentication Error

Error Messages	Cause	Action
Authentication Error 01 Incorrect PIN code. Enter PIN correctly.	The PIN you entered to access the account is incorrect. The PIN is the four-digit number that was entered when registering the account to the machine.	Enter the correct PIN.
Authentication Error 02 Incorrect or expired ID, or this temporary ID is already used. Enter correctly or reissue temporary ID. Temporary ID is valid for 24 hours after it is issued.	The temporary ID that was entered is incorrect.	Enter the correct temporary ID.
	The temporary ID that was entered has expired. A temporary ID is valid for 24 hours.	Apply for Brother Web Connect access again and receive a new temporary ID, and then use the new ID to register the account to the machine.
Authentication Error 03 Display name has already been registered. Enter another display name.	The name you entered as the display name has already been registered to another service user.	Enter a different display name.

Server Error

Error Messages	Cause	Action
Server Error 01 Authentication failed. Do the following: 1. Go to http://bwc.brother.com to get a new temporary ID. 2. Press OK and enter your new temporary ID in the next screen.	The machine's authentication information (needed to access the service) has expired or is invalid.	Apply for Brother Web Connect access again to receive a new temporary ID, and then use the new ID to register the account to the machine.
Server Error 03 Failed to upload. Unsupported file or corrupt data. Confirm data of file.	The file you are trying to upload may have one of the following problems: • The file exceeds the service's limit on number of pixels, file size, etc. • The file type is not supported. • The file is corrupted.	The file cannot be used: • Check the service's size or format restrictions. • Save the file as a different type. • If possible, get a new, uncorrupted version of the file.
Server Error 13 Service temporarily unavailable. Try again later.	There is a problem with the service and it cannot be used now.	Wait and try again. If you get the message again, access the service from a computer to confirm if it is unavailable.

Shortcut Error

Error Messages	Cause	Action
Shortcut Error 02 Account is invalid. Please register account and shortcut again after deleting this shortcut.	The shortcut cannot be used because the account was deleted after the shortcut was registered.	Delete the shortcut, and then register the account and shortcut again.

Related Information

- Error and Maintenance Messages

Document Jams

- Document is Jammed in the Top of the ADF Unit
- Document is Jammed inside the ADF Unit
- Remove Paper Scraps Jammed in the ADF
- Error and Maintenance Messages

Document is Jammed in the Top of the ADF Unit

Related Models: MFC-J491DW/MFC-J690DW/MFC-J890DW

1. Remove any paper that is not jammed from the ADF.
2. Open the ADF cover.
3. Remove the jammed document by pulling it upwards.

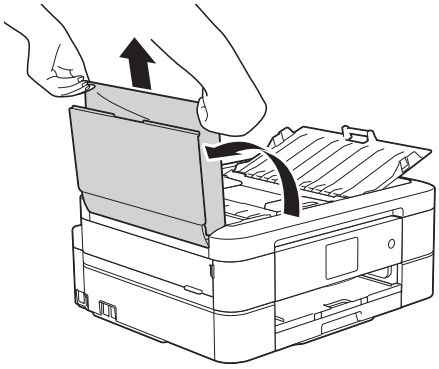

4. Close the ADF cover.
5. Press **Stop/Exit** or .

IMPORTANT

To avoid future document jams, close the ADF cover correctly by pressing it down in the centre.

Related Information

- Document Jams

Document is Jammed inside the ADF Unit

Related Models: MFC-J491DW/MFC-J690DW/MFC-J890DW

1. Remove any paper that is not jammed from the ADF.
2. Lift the document cover.
3. Pull the jammed document out to the left.

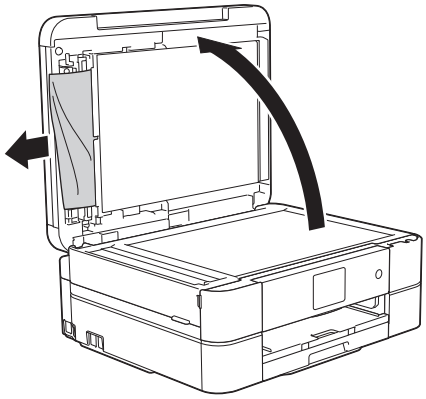

4. Close the document cover.
5. Press **Stop/Exit** or .

IMPORTANT

To avoid future document jams, close the ADF cover correctly by pressing it down in the centre.

Related Information

- Document Jams

Remove Paper Scraps Jammed in the ADF

Related Models: MFC-J491DW/MFC-J690DW/MFC-J890DW

1. Lift the document cover.
2. Insert a piece of stiff paper, such as cardstock, into the ADF to push any small paper scraps through.

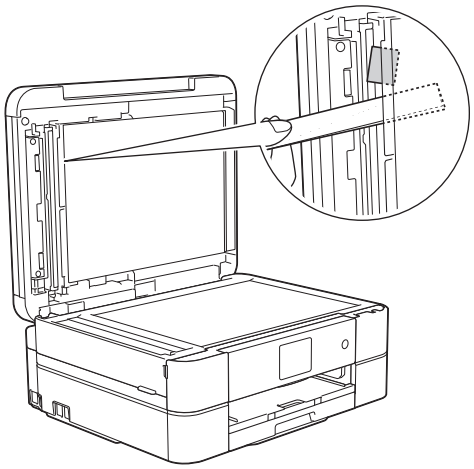

3. Close the document cover.
4. Press **Stop/Exit** or .

IMPORTANT

To avoid future document jams, close the ADF cover correctly by pressing it down in the centre.

Related Information

- Document Jams

Printer Jam or Paper Jam

Locate and remove the jammed paper.

- Paper is Jammed Inside and in the Front of the Machine (Jam A Inside/Front)
- Paper is Jammed in the Front of the Machine (Jam B Front)
- Paper is Jammed in the Back of the Machine (Jam C Rear)
- Error and Maintenance Messages
- Paper Handling and Printing Problems

Paper is Jammed Inside and in the Front of the Machine (Jam A Inside/Front)

If the LCD displays `[Jam A Inside/Front]` or `[Repeat Jam A Inside/Front]`, follow these steps:

1. Unplug the machine from the electrical socket.

IMPORTANT

(MFC-J491DW/MFC-J690DW)

Before you unplug the machine from the power source, you can transfer your faxes that are stored in the machine's memory to your computer or another fax machine so you will not lose any important messages.

2. Pull the paper tray (1) completely out of the machine.

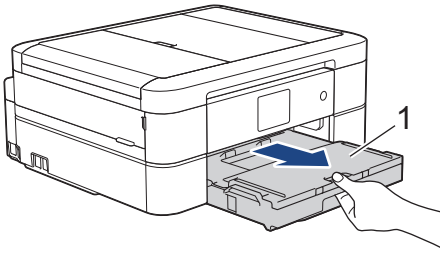

3. Pull the two green levers inside the machine to release the jammed paper.

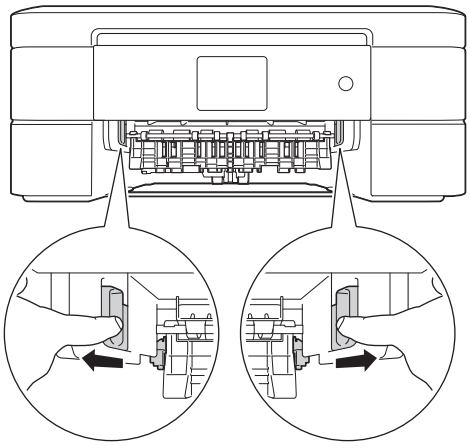

4. Place both hands under the plastic tabs on both sides of the machine to lift the scanner cover (1) into the open position.

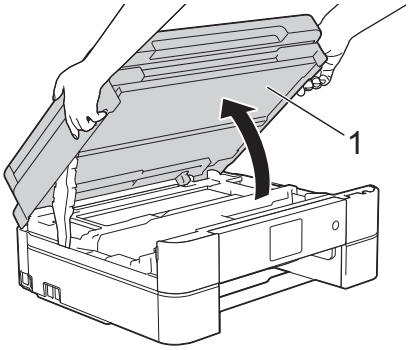

5. Slowly pull the jammed paper (1) out of the machine.

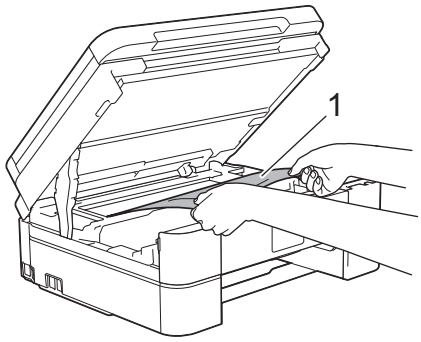

IMPORTANT

- DO NOT touch the encoder strip, a thin strip of plastic that stretches across the width of the machine (1). Doing this may cause damage to the machine.

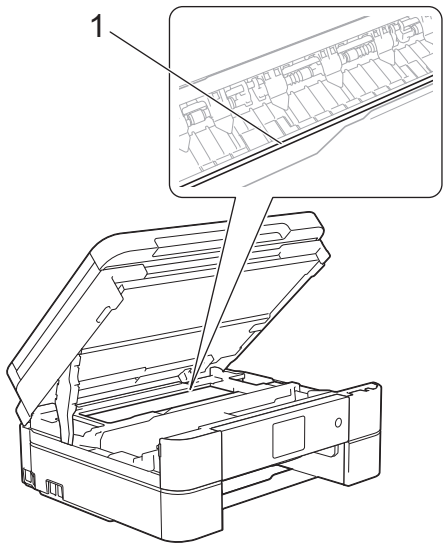

- If the print head is in the right corner as shown in the illustration (2), you cannot move it. Follow these steps:
  a. Close the scanner cover, and then reconnect the power cord.
  b. Open the scanner cover again, and then hold down **Stop/Exit** or until the print head moves to the centre.
  c. Unplug the machine from the power source and remove the jammed paper.

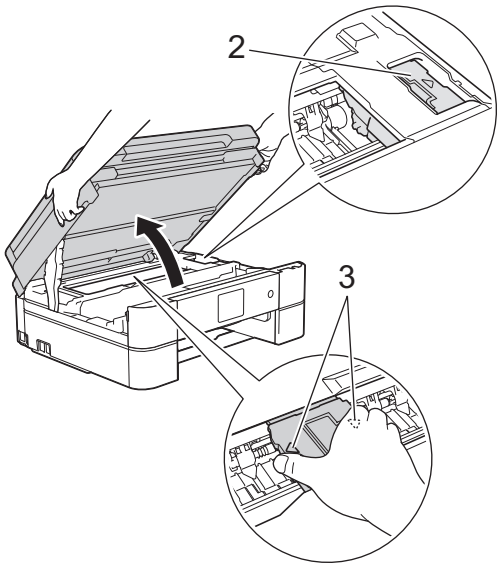

- If the paper is jammed under the print head, unplug the machine from the power source, and then move the print head to take out the paper.

  Hold the concave areas with the triangle marks as shown in the illustration (3) to move the print head.
- If ink gets on your skin or clothing, immediately wash it off with soap or detergent.

If your LCD error message was `[Repeat Jam A Inside/Front]`, move the print head (if needed) to take out any paper remaining in this area. Make sure scraps of paper are not left in the corners of the machine (1) and (2).

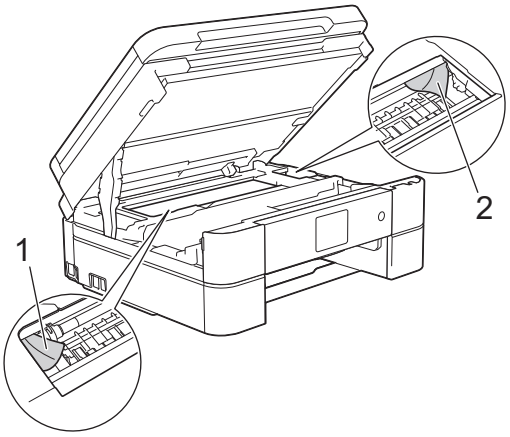

When finished, continue with the next step.

6. Gently close the scanner cover using both hands.

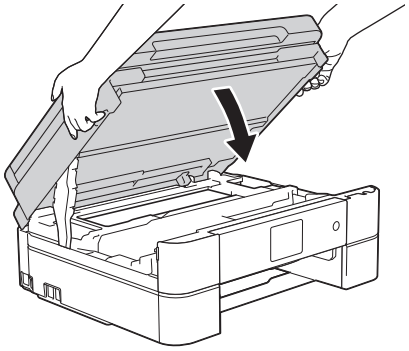

7. Slowly pull the jammed paper (1) out of the machine.

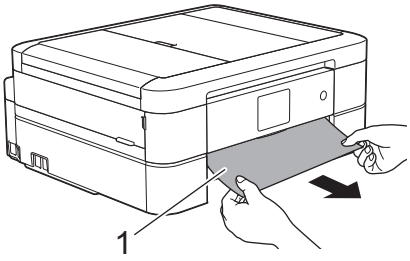

If your LCD error message was [Repeat Jam A Inside/Front], do the following:

a. Make sure you look carefully inside (1) for any scraps of paper.

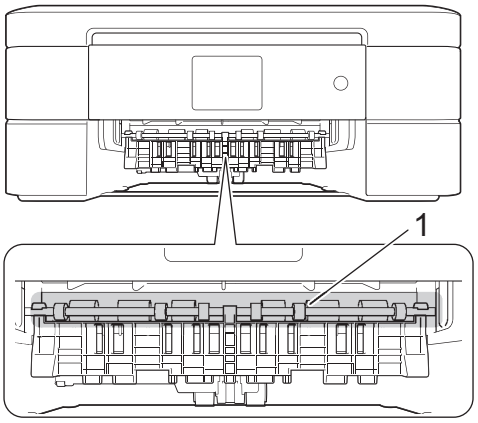

b. Squeeze both levers (1), and then open the Jam Clear Cover at the back of the machine.

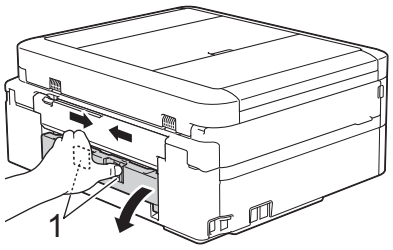

c. Slowly pull the jammed paper out of the machine.

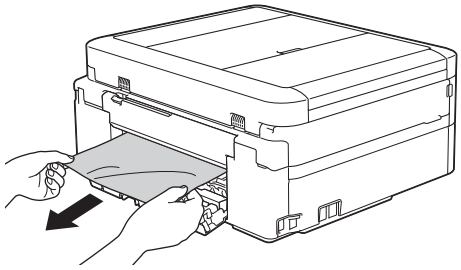

d. Close the Jam Clear Cover. Make sure the cover is closed completely.

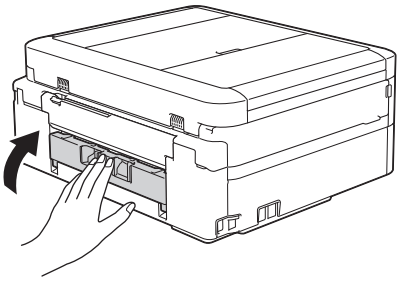

When finished, continue with the next step.

8. Put the paper tray firmly back in the machine.

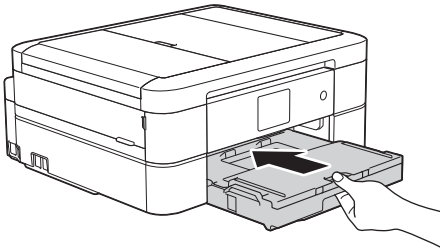

9. While holding the paper tray in the machine, pull out the paper support (1) until it locks into place, and then unfold the paper support flap (2).

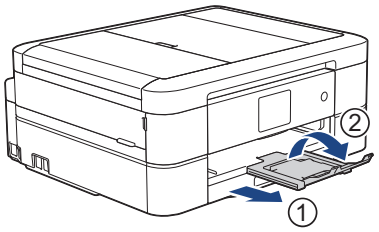

10. Reconnect the power cord.

Related Information

- Printer Jam or Paper Jam
- Error and Maintenance Messages

Paper is Jammed in the Front of the Machine (Jam B Front)

If the LCD displays `[Jam B Front]` or `[Repeat Jam B Front]`, follow these steps:

1. Unplug the machine from the electrical socket.

IMPORTANT

(MFC-J491DW/MFC-J690DW)

Before you unplug the machine from the power source, you can transfer your faxes that are stored in the machine's memory to your computer or another fax machine so you will not lose any important messages.

2. Pull the paper tray (1) completely out of the machine.

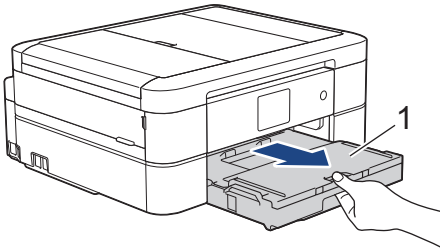

3. Pull the two green levers inside the machine to release the jammed paper.

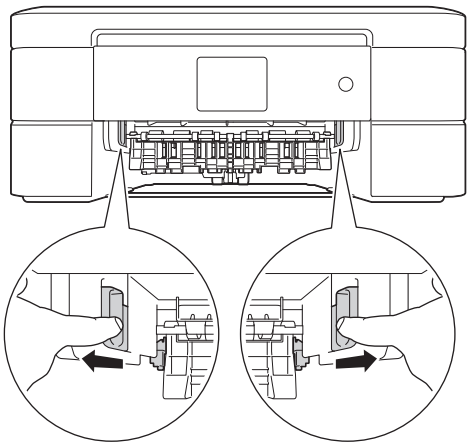

4. Slowly pull out the jammed paper (1).

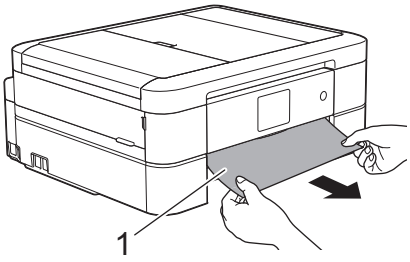

If your LCD error message was [Repeat Jam B Front], do the following:

a. Make sure you look carefully inside (1) for any scraps of paper.

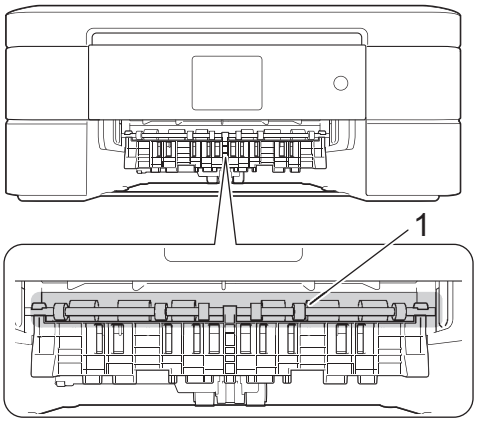

b. Squeeze both levers (1), and then open the Jam Clear Cover at the back of the machine.

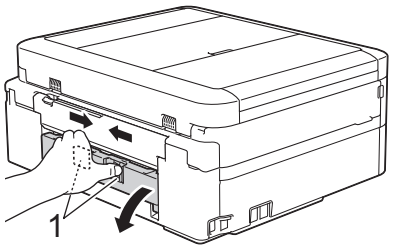

c. Slowly pull the jammed paper out of the machine.

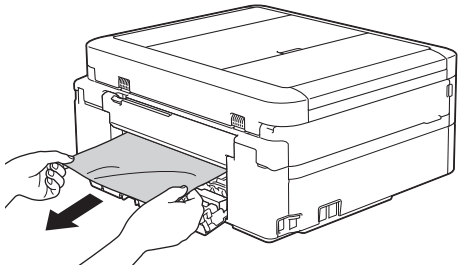

d. Close the Jam Clear Cover. Make sure the cover is closed completely.

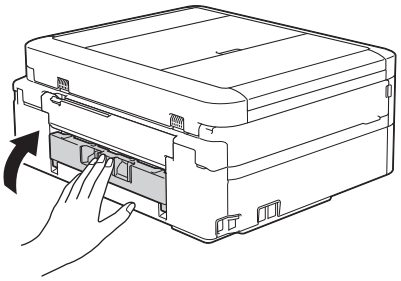

When finished, continue with the next step.

5. Put the paper tray firmly back in the machine.

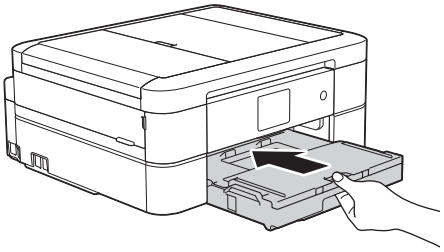

6. While holding the paper tray in the machine, pull out the paper support (1) until it locks into place, and then unfold the paper support flap (2).

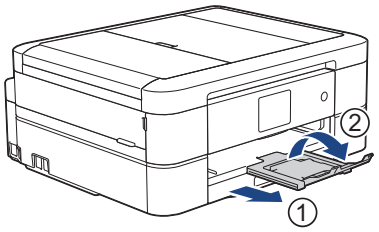

7. Reconnect the power cord.

Related Information

- Printer Jam or Paper Jam
- Error and Maintenance Messages

Paper is Jammed in the Back of the Machine (Jam C Rear)

If the LCD displays `[Jam C Rear]`, follow these steps:

1. Unplug the machine from the electrical socket.

IMPORTANT

(MFC-J491DW/MFC-J690DW)

Before you unplug the machine from the power source, you can transfer your faxes that are stored in the machine's memory to your computer or another fax machine so you will not lose any important messages.

2. Pull the paper tray (1) completely out of the machine.

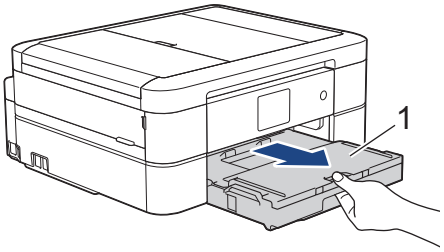

3. Pull the two green levers inside the machine to release the jammed paper.

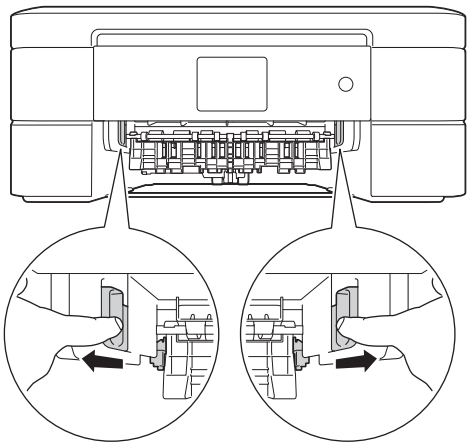

Depending on the paper size, it is easier to remove the jammed paper from the front of the machine rather than from the back of the machine.

4. Squeeze both levers (1), and then open the Jam Clear Cover at the back of the machine.

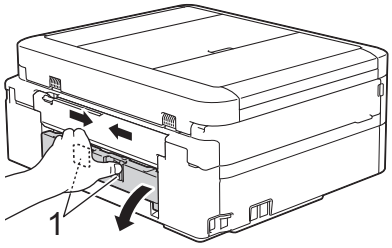

5. Slowly pull the jammed paper out of the machine.

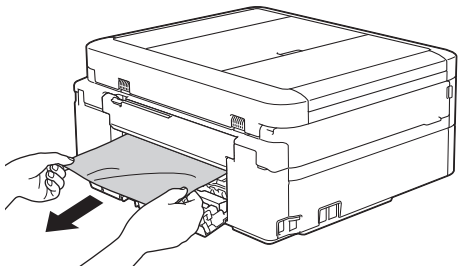

6. Close the Jam Clear Cover. Make sure the cover is closed completely.

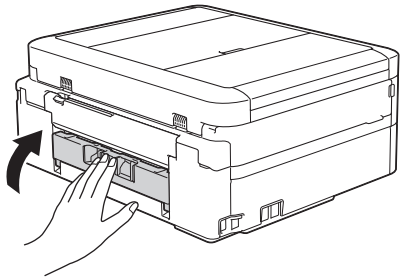

7. Put the paper tray firmly back in the machine.

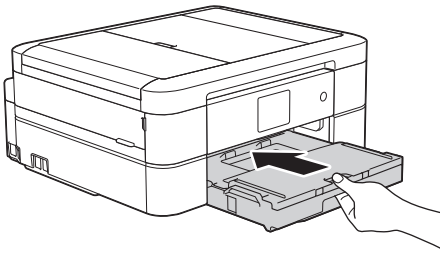

8. While holding the paper tray in the machine, pull out the paper support (1) until it locks into place, and then unfold the paper support flap (2).

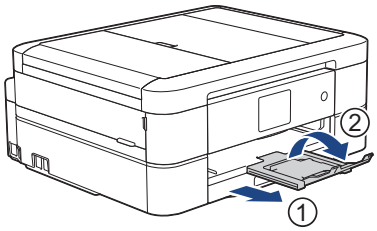

9. Reconnect the power cord.

Additional paper jam clear operations

(DCP-J572DW/DCP-J772DW/MFC-J690DW/MFC-J890DW)

If the LCD error message continues to appear and you repeatedly experience paper jams, do the following:

1. Unplug the machine from the electrical socket and open the manual feed slot cover.
2. Load one sheet of thick A4 or Letter sized paper, such as glossy paper, in the manual feed slot. Insert the paper deep into the manual feed slot.

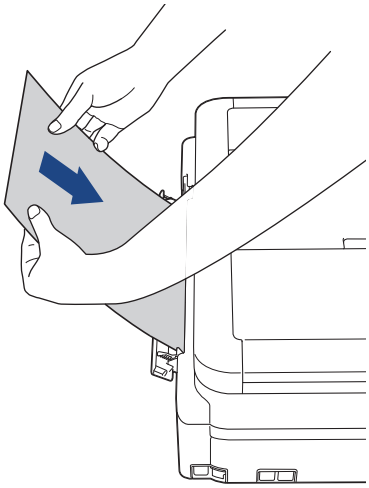

3. Re-connect the power cord.

   The paper you placed in the manual feed slot will be fed through the machine and ejected. If the thick paper is pushing any jammed paper out, remove the jammed paper.

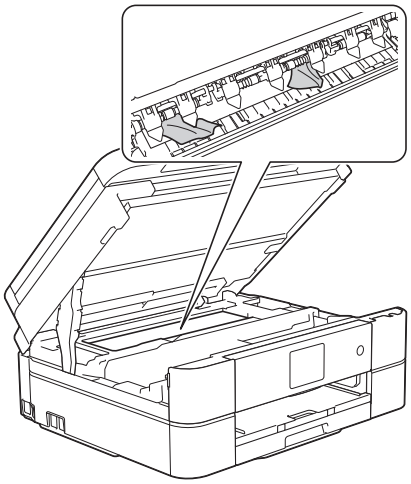

Related Information

- Printer Jam or Paper Jam
- Error and Maintenance Messages

If You Are Having Difficulty with Your Machine

For technical help, you must contact Brother customer support.

If you think there is a problem with your machine, check the following topics. You can correct most problems yourself.

If you need additional help, go to your model's **FAQs & Troubleshooting** page on the Brother Solutions Center at support.brother.com.

Using non-Brother supplies may affect the print quality, hardware performance, and machine reliability.

- Paper Handling and Printing Problems
- Telephone and Fax Problems
- Other Problems
- Network Problems
- Google Cloud Print Problems
- AirPrint Problems

Paper Handling and Printing Problems

Printing Difficulties

Difficulties	Suggestions
No printout	Check that the correct printer driver has been installed and selected.
	Check to see if the machine's display is showing an error message. See *Related Information*: *Error and Maintenance Messages*.
	Check that the machine is online: • Windows Server 2008 Click **(Start)** > **Control Panel** > **Hardware and Sound** > **Printers**. Right-click **Brother MFC-XXXX Printer** (where XXXX is your model name). Make sure **Use Printer Online** is not listed. If it is listed, click this option to set the driver Online. • Windows 7 and Windows Server 2008 R2 Click **(Start)** > **Devices and Printers**. Right-click **Brother MFC-XXXX Printer** (where XXXX is your model name) and click **See what's printing**. Click **Printer** in the menu bar. Make sure **Use Printer Offline** is not selected. • Windows 8 Move your mouse to the lower right corner of your desktop. When the menu bar appears, click **Settings** > **Control Panel**. In the **Hardware and Sound** group, click **View devices and printers**. Right-click the **Brother MFC-XXXX Printer** (where XXXX is your model name). Click **See what's printing**. If printer driver options appear, select your printer driver. Click **Printer** in the menu bar and make sure **Use Printer Offline** is not selected. • Windows 10 and Windows Server 2016 Click > **Windows System** > **Control Panel**. In the **Hardware and Sound** group, click **View devices and printers**. Right-click the **Brother MFC-XXXX Printer** (where XXXX is your model name). Click **See what's printing**. If printer driver options appear, select your printer driver. Click **Printer** in the menu bar and make sure **Use Printer Offline** is not selected. • Windows Server 2012 Move your mouse to the lower right corner of your desktop. When the menu bar appears, click **Settings** > **Control Panel**. In the **Hardware** group, click **View devices and printers**. Right-click the **Brother MFC-XXXX Printer** (where XXXX is your model name). Click **See what's printing**. If printer driver options appear, select your printer driver. Click **Printer** in the menu bar and make sure **Use Printer Offline** is not selected. • Windows Server 2012 R2 Click **Control Panel** on the **Start** screen. In the **Hardware** group, click **View devices and printers**. Right-click the **Brother MFC-XXXX Printer** (where XXXX is your model name). Click **See what's printing**. If printer driver options appear, select your printer driver. Click **Printer** in the menu bar and make sure **Use Printer Offline** is not selected.
	One or more ink cartridges have reached the end of their life. See *Related Information*: *Replace the Ink Cartridges*.
	If old, unprinted data remains in the printer driver spooler, it will prevent new print jobs from printing. Open the printer icon and delete all data as follows: • Windows Server 2008 Click **(Start)** > **Control Panel** > **Hardware and Sound** > **Printers**. • Windows 7 and Windows Server 2008 R2

Difficulties	Suggestions
	Click **(Start)** > **Devices and Printers** > **Printers and Faxes**. • Windows 8 Move your mouse to the lower right corner of your desktop. When the menu bar appears, click **Settings** > **Control Panel**. In the **Hardware and Sound** group, click **View devices and printers** > **Printers**. • Windows 10 and Windows Server 2016 Click > **Windows System** > **Control Panel**. In the **Hardware and Sound** group, click **View devices and printers** > **Printers**. • Windows Server 2012 Move your mouse to the lower right corner of your desktop. When the menu bar appears, click **Settings** > **Control Panel**. In the **Hardware** group, click **View devices and printers** > **Printers**. • Windows Server 2012 R2 Click **Control Panel** on the **Start** screen. In the **Hardware** group, click **View devices and printers** > **Printers**. • Mac Click the **System Preferences** > **Printers & Scanners**.
The headers or footers appear when the document is displayed on the screen but do not appear when the document is printed.	There is an unprintable area on the top and bottom of the page. Adjust the top and bottom margins in your document to allow for this. See *Related Information*: *Unprintable Area*.
Cannot perform 'Page Layout' printing.	Check that the paper size setting in the application and in the printer driver are the same.
Print speed is too slow.	Try changing the printer driver setting. The highest resolution needs longer data processing, sending and printing time. Try the other quality settings in the printer driver as follows: • Windows In the printer driver, clear the **Colour Enhancement** check box on the **Advanced** tab. • Mac In the printer driver, select **Color Settings**, click **Advanced Color Settings**, and make sure you clear the **Color Enhancement** check box.
	Turn the Borderless feature off. Borderless printing is slower than normal printing. See *Related Information*: *Print Settings (Windows)* or *Print a Photo (Mac)*.
	Turn the Quiet Mode setting off. Print speed is slower in Quiet Mode. See *Related Information*: *Reduce Printing Noise*.

Print Quality Difficulties

Difficulties	Suggestions
Poor print quality	Check the print quality. See *Related Information*: *Check the Print Quality*.
	Make sure the Media Type setting in the printer driver or the Paper Type setting in the machine's menu matches the type of paper you are using. See *Related Information*: *Change the Paper Size and Paper Type*. See *Related Information*: *Print Settings (Windows)* or *Print Options (Mac)*.
	Make sure your ink cartridges are fresh. The following may cause ink to clog: • The expiration date written on the cartridge package has passed. • The ink cartridge has been in your machine for over six months. • The ink cartridge may not have been stored correctly before use.

Difficulties	Suggestions
	Make sure you are using Brother Original ink. Brother does not recommend the use of cartridges other than Brother Original cartridges or the refilling of used cartridges with ink from other sources.
	Make sure you are using one of the recommended types of paper. See *Related Information*: *Acceptable Paper and Other Print Media*.
	The recommended environment for your machine is between 20°C to 33°C.
White lines appear in text or graphics. 	Clean the print head. See *Related Information*: *Clean the Print Head from Your Brother Machine*. See *Related Information*: *Clean the Print Head from Your Computer (Windows)* or *Clean the Print Head from Your Computer (Mac)*.
	Make sure you are using Brother Original ink.
	Try using the recommended types of paper. See *Related Information*: *Acceptable Paper and Other Print Media*.
	To prolong print head life, provide the best ink cartridge economy and maintain print quality, we do not recommend frequently unplugging the machine and/or leaving the machine unplugged for extended periods of time. We recommend using to power down the machine. Using allows minimal power to the machine, resulting in periodic, but less frequent, cleaning of the print head.
The machine prints blank pages.	Check the print quality. See *Related Information*: *Check the Print Quality*.
	Make sure you are using Brother Original ink.
	To prolong print head life, provide the best ink cartridge economy and maintain print quality, we do not recommend frequently unplugging the machine and/or leaving the machine unplugged for extended periods of time. We recommend using to power down the machine. Using allows minimal power to the machine, resulting in periodic, but less frequent, cleaning of the print head.
Characters and lines are blurred. 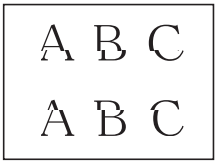	Check the printing alignment. See *Related Information*: *Check the Print Alignment from Your Brother Machine*.
	Change the print setting options. See *Related Information*: *Change the Print Setting Options When Having Printing Problems*.
Printed text or images are skewed.	Make sure the paper is loaded correctly in the paper tray and the paper guides are adjusted correctly. See *Related Information*: *Load Paper*.
	Make sure the Jam Clear Cover is closed correctly.
Smudge or stain at the top centre of the printed page.	Make sure the paper is not too thick or curled. See *Related Information*: *Acceptable Paper and Other Print Media*.
Printing appears dirty or ink seems to run.	Make sure you are using the recommended types of paper. Do not handle the paper until the ink is dry. See *Related Information*: *Acceptable Paper and Other Print Media*.
	Make sure the printing surface is face down in the paper tray.
	Make sure you are using Brother Original ink.
	If you are using photo paper, make sure the glossy side of the photo paper is face down in the tray and you have set the correct paper type. If you are printing a photo from your computer, set the Media Type in the printer driver.
Ink is smudged or wet when using glossy photo paper.	Be sure to check the front and back of the paper. Place the glossy surface (printing surface) face down. See *Related Information*: *Change the Paper Size and Paper Type*.

Difficulties	Suggestions
	If you use glossy photo paper, make sure the paper type setting is correct.
Stains appear on the reverse side or at the bottom of the page.	Make sure the printer platen is not dirty with ink. See *Related Information*: *Clean the Machine's Printer Platen*.
	Make sure you are using Brother Original ink.
	Make sure you are using the paper support flap. See *Related Information*: *Load Paper*.
	Make sure the paper feed rollers are not dirty with ink. See *Related Information*: *Clean the Paper Feed Rollers*.
The machine prints dense lines on the page.	Windows Select **Reverse Order** in the **Basic** tab of the printer driver.
The printouts are wrinkled.	• Windows In the printer driver, select the **Advanced** tab, click **Other Print Options**, and then click **Advanced Colour Settings**. Clear the **Bi-Directional Printing** check box. • Mac In the printer driver, select **Print Settings**, click **Advanced**, select **Other Print Options**, and clear the **Bi-Directional Printing** check box.
	Make sure you are using Brother Original ink.

Paper Handling Difficulties

Difficulties	Suggestions
The machine does not feed paper.	Make sure the paper tray is pushed in all the way until it locks into place.
	Make sure the Jam Clear Cover at the back of the machine is closed.
	(DCP-J572DW/DCP-J772DW/MFC-J690DW) Return the photo paper tray to the Normal printing position when you use cut sheet paper. See *Related Information*: *Load Photo or Photo L Paper in Photo Paper Tray*.
	If the machine's LCD displays a Paper Jam message and you still have a problem, see *Related Information*: *Error and Maintenance Messages*.
	If the paper tray is empty, load a new stack of paper into the paper tray.
	If there is paper in the paper tray, make sure it is straight. If the paper is curled, straighten it. Sometimes it is helpful to remove the paper, turn the stack over and put it back in the paper tray.
	Reduce the amount of paper in the paper tray, and then try again.
	Clean the paper pick-up rollers. See *Related Information*: *Clean the Paper Pick-up Rollers*.
	Make sure that the paper is within specifications for the machine. See *Related Information*: *Paper Weight and Thickness*.
Photo paper does not feed correctly.	When you print on Brother Photo paper, load one extra sheet of the same photo paper in the paper tray. An extra sheet has been included in the paper package for this purpose.
Machine feeds multiple pages.	• Make sure the paper is loaded correctly in the paper tray. • Remove all the paper from the tray and fan the stack of paper well, then put it back in the tray. • Make sure you do not push the paper in too far. See *Related Information*: *Load Paper*.
	Make sure the Jam Clear Cover is closed correctly. See *Related Information*: *Printer Jam or Paper Jam*.

Difficulties	Suggestions
	Make sure the Base Pad in the paper tray is not dirty. See *Related Information*: *Clean the Base Pad*.
There is a paper jam.	See *Related Information*: *Printer Jam or Paper Jam*. Make sure the paper guides are set to the correct paper size.
	Use the jam prevention settings. For copying See *Related Information*: *Change the Print Setting Options When Having Printing Problems*. For printing See *Related Information*: *Prevent Smudged Printouts and Paper Jams (Windows)* or *Prevent Smudged Printouts and Paper Jams (Mac)*.
The paper jams when you use 2-sided copy or 2-sided print.	If paper jams occur frequently during 2-sided copying or 2-sided printing, the paper feed rollers may be stained with ink. Clean the paper feed rollers. See *Related Information*: *Clean the Paper Feed Rollers*.

Printing Received Faxes (MFC models)

Difficulties	Suggestions
• Condensed print • Horizontal streaks • Top and bottom sentences are cut off • Missing lines	This is usually caused by a poor telephone connection. Make a copy; if your copy looks good, you probably had a bad connection, with static or interference on the telephone line. Ask the other party to send the fax again.
Black lines when receiving.	The sender's scanner may be dirty. Ask the sender to make a copy to see if the problem is with the sending machine. Try receiving from another fax machine.
Left and right margins are cut off or a single page is printed on two pages.	If the received faxes are divided and printed on two pages or if you get an extra blank page, your paper size setting may not be correct for the paper you are using. See *Related Information*: *Change the Paper Size and Paper Type*.
	Turn on Auto Reduction. See *Related Information*: *Shrink Page Size of an Oversized Incoming Fax*.
Received colour fax prints only in monocrome.	Replace the colour ink cartridges that have reached the end of their life, and then ask the other person to send the colour fax again. See *Related Information*: *Replace the Ink Cartridges*.

Related Information

- If You Are Having Difficulty with Your Machine
- Troubleshooting
- Error and Maintenance Messages
- Replace the Ink Cartridges
- Unprintable Area
- Check the Print Quality
- Change the Paper Size and Paper Type
- Acceptable Paper and Other Print Media
- Clean the Print Head from Your Brother Machine
- Clean the Print Head from Your Computer (Windows)
- Clean the Print Head from Your Computer (Mac)
- Check the Print Alignment from Your Brother Machine
- Load Paper

- Load Photo or Photo L Paper in Photo Paper Tray
- Clean the Machine's Printer Platen
- Clean the Paper Feed Rollers
- Clean the Paper Pick-up Rollers
- Printer Jam or Paper Jam
- Shrink Page Size of an Oversized Incoming Fax
- Paper Weight and Thickness
- Print Settings (Windows)
- Print Options (Mac)
- Print a Photo (Mac)
- Prevent Smudged Printouts and Paper Jams (Windows)
- Prevent Smudged Printouts and Paper Jams (Mac)
- Clean the Base Pad
- Change the Print Setting Options When Having Printing Problems
- Reduce Printing Noise

Telephone and Fax Problems

Related Models: MFC-J491DW/MFC-J690DW/MFC-J890DW

Telephone Line or Connections

Difficulties	Suggestions
Dialling does not work. (No dial tone)	Check all line cord connections. Make sure the telephone line cord is plugged into the telephone wall socket and the LINE socket of the machine. Make sure your machine has a dial tone by pressing the Hook button in Fax mode. If you subscribe to DSL or VoIP services, contact your service provider for connection instructions. If you are using a VoIP system, try changing the VoIP setting to *Basic (for VoIP)*. This will lower modem speed and turn off Error Correction Mode (ECM). See *Related Information*: *Telephone Line Interference/VoIP*.
	(Available only for some countries.) Change the Tone/Pulse setting. See *Related Information*: *Set Tone or Pulse Dialling Mode*.
	(Not available for South Africa) Send a manual fax by pressing the Hook button, and dialing the number. Wait to hear fax-receiving tones before pressing the Start button. (South Africa) If an external phone is connected to the machine, send a manual fax by lifting the handset of the external telephone and dialling the number using the external telephone. Wait to hear the fax receiving tones before sending the fax.
	If there is no dial tone, connect a known working telephone and telephone line cord to the socket. Then lift the external telephone's handset and listen for a dial tone. If there is still no dial tone, ask your telephone company to check the line and/or wall socket.
The machine does not answer when called.	Make sure the machine is in the correct receive mode for your setup. See *Related Information*: *Choose the Correct Receive Mode*. Check for a dial tone. If possible, call your machine to hear it answer. If there is still no answer, check that the telephone line cord is plugged into the telephone wall socket and the LINE socket of the machine. Make sure your machine has a dial tone by pressing the Hook button in Fax mode. If there is no ringing when you call your machine, ask your telephone company to check the line.

Handling Incoming Calls

Difficulties	Suggestions
The machine 'Hears' a voice as a CNG Tone.	If Fax Detect is set to On, your machine is more sensitive to sounds. It may mistakenly interpret certain voices or music on the line as a fax machine calling and respond with fax receiving tones. Deactivate the machine by pressing **Stop/ Exit** or . Try avoiding this problem by turning Fax Detect to Off. See *Related Information*: *Set Fax Detect*.
Sending a Fax Call to the machine.	If you answered on an extension or external telephone, press your Remote Activation Code (the factory setting is *51 (*91 for New Zealand)). If you answered on the external telephone, press the Start button to receive the fax. When your machine answers, hang up.
Custom features on a single line.	If you have Call Waiting, Call Waiting/Caller ID, Caller ID, Voice Mail, an answering machine, an alarm system or other custom feature on a single telephone line with your machine, it may create a problem sending or receiving faxes.

Difficulties	Suggestions
	For Example: If you subscribe to Call Waiting or some other custom service and its signal comes through the line while your machine is sending or receiving a fax, the signal can temporarily interrupt or disrupt the faxes. Brother's ECM (Error Correction Mode) feature should help overcome this problem. This condition is related to the telephone system industry and is common to all devices that send and receive information on a single, shared line with custom features. If avoiding a slight interruption is crucial to your business, we recommend using a separate telephone line with no custom features.

Receiving Faxes

Difficulties	Suggestions
Cannot receive a fax.	(Not available for South Africa) Make sure your machine has a dial tone by pressing the Hook button in Fax mode. If you hear static or interference on your fax line, contact your local telephone provider.
	Check all line cord connections. Make sure the telephone line cord is plugged into the telephone wall socket and the LINE socket of the machine. If you subscribe to DSL or VoIP services, contact your service provider for connection instructions. If you are using a VoIP system, try changing the VoIP setting to *Basic (for VoIP)*. This will lower modem speed and turn off Error Correction Mode (ECM). See *Related Information*: *Telephone Line Interference/VoIP*.
	Make sure the machine is in the correct Receive Mode. This is determined by the external devices and telephone subscriber services you have on the same line as the Brother machine. See *Related Information*: *Choose the Correct Receive Mode*. • If you have a dedicated fax line and want your Brother machine to automatically answer all incoming faxes, you should select Fax only mode. • If your Brother machine shares a line with an external answering machine, you should select the External TAD mode. In External TAD mode, your Brother machine will receive incoming faxes automatically and voice callers will be able to leave a message on your answering machine. • If your Brother machine shares a line with other telephones and you want it to automatically answer all incoming faxes, you should select the Fax/Tel mode. In Fax/Tel mode, your Brother machine will receive faxes automatically and produce a pseudo/double-ring to alert you to answer voice calls. • If you do not want your Brother machine to answer any incoming faxes automatically, you should select the Manual mode. In Manual mode, you must answer every incoming call and activate the machine to receive faxes.
	Another device or service at your location may be answering the call before your Brother machine answers. To test this, lower the Ring Delay setting: • If the Receive Mode is set to Fax Only or Fax/Tel, reduce the Ring Delay to one ring. See *Related Information*: *Set the Number of Rings Before the Machine Answers (Ring Delay)*. • If the Receive Mode is set to External TAD, reduce the number of rings programmed on your answering machine to two. • If the Receive Mode is set to Manual, DO NOT adjust the Ring Delay setting.
	Have someone send you a test fax: • If you received the test fax successfully, your machine is operating correctly. Remember to reset your Ring Delay or answering machine setting back to your original setting. If receiving problems recur after resetting the Ring Delay, then a person, device, or subscriber service is answering the fax call before the machine has a chance to answer.

Difficulties	Suggestions
	• If you were not able to receive the fax, then another device or subscriber service may be interfering with your fax reception or there may be a problem with your fax line.
	If you are using a telephone answering machine (External TAD mode) on the same line as the Brother machine, make sure your answering machine is set up correctly. See *Related Information*: *Connect an External TAD*. 1. Connect the external TAD as shown in the illustration. See *Related Information*: *External TAD (Telephone Answering Device)*. 2. Set your answering machine to answer in one or two rings. 3. Record the outgoing message on your answering machine. • Record five seconds of silence at the beginning of your outgoing message. • Limit your speaking to 20 seconds. • End your outgoing message with your Remote Activation Code for people sending manual faxes. For example: “After the beep, leave a message or press *51 (*91 for New Zealand) and Start to send a fax.” 4. Set your answering machine to answer calls. 5. Set your Brother machine’s Receive Mode to External TAD. See *Related Information*: *Choose the Correct Receive Mode*.
	Make sure your Brother machine’s Fax Detect feature is turned On. Fax Detect is a feature that allows you to receive a fax even if you answered the call on an external or extension telephone. See *Related Information*: *Set Fax Detect*.
	If you often get transmission errors due to possible interference on the telephone line or if you are using a VoIP system, try changing the Compatibility setting to *Basic(for VoIP)*. See *Related Information*: *Telephone Line Interference/VoIP*.
	(Available only for some countries.) If you connect your machine to a PBX or ISDN line, set the menu setting of Telephone Line Type to your telephone line type. See *Related Information*: *Set the Telephone Line Type*.

Sending Faxes

Difficulties	Suggestions
Cannot send a fax.	Check all line cord connections. Make sure the telephone line cord is plugged into the telephone wall socket and the LINE socket of the machine. Make sure your machine has a dial tone by pressing the Hook button in Fax mode. If you subscribe to DSL or VoIP services, contact your service provider for connection instructions. If you are using a VoIP system, try changing the VoIP setting to *Basic (for VoIP)*. This will lower modem speed and turn off Error Correction Mode (ECM). See *Related Information*: *Telephone Line Interference/VoIP*.
	Print the Transmission Verification Report and check for an error. See *Related Information*: *Print Reports*.
	Ask the other party to check that the receiving machine has paper.
Poor sending quality.	Try changing your resolution to Fine or S.Fine. Make a copy to check your machine’s scanner operation. If the copy quality is poor, clean the scanner. See *Related Information*: *Clean the Scanner*.
Transmission Verification Report says RESULT:NG.	There is probably temporary noise or static on the line. Try sending the fax again. If you are sending a PC-Fax message and get RESULT:NG on the Transmission Verification Report, your machine may be out of memory. To free up extra memory, you can turn off Fax Storage, print fax messages in memory or cancel a

Difficulties	Suggestions
	delayed fax. If the problem continues, ask the telephone company to check your telephone line. See *Related Information*: *Turn Off Memory Receive*. See *Related Information*: *Print a Fax Stored in the Machine's Memory*. See *Related Information*: *Cancel a Fax in Progress*. See *Related Information*: *Check and Cancel a Pending Fax*.
	(Available only for some countries.) If you connect your machine to a PBX or ISDN line, set the menu setting of Telephone Line Type to your telephone line type. See *Related Information*: *Set the Telephone Line Type*.
	If you often get transmission errors due to possible interference on the telephone line or if you are using a VoIP system, try changing the Compatibility setting to Basic(for VoIP). See *Related Information*: *Telephone Line Interference/VoIP*.
Sent faxes are blank.	Make sure you are loading the document correctly. See *Related Information*: *Load Documents in the Automatic Document Feeder (ADF)*. See *Related Information*: *Load Documents on the Scanner Glass*.
Vertical black lines when sending.	Black vertical lines on faxes you send are typically caused by dirt or correction fluid on the glass strip. Clean the glass strip. See *Related Information*: *Clean the Scanner*.

Related Information

- If You Are Having Difficulty with Your Machine
- Set Dial Tone Detection
- Telephone Line Interference/VoIP
- Troubleshooting
- Set Tone or Pulse Dialling Mode
- Choose the Correct Receive Mode
- Set Fax Detect
- Set the Number of Rings Before the Machine Answers (Ring Delay)
- Connect an External TAD
- External TAD (Telephone Answering Device)
- Set the Telephone Line Type
- Print Reports
- Clean the Scanner
- Turn Off Memory Receive
- Print a Fax Stored in the Machine's Memory
- Cancel a Fax in Progress
- Check and Cancel a Pending Fax
- Load Documents in the Automatic Document Feeder (ADF)
- Load Documents on the Scanner Glass

Set Dial Tone Detection

Related Models: MFC-J491DW/MFC-J690DW/MFC-J890DW

Setting the Dial Tone to [Detection] will shorten the Dial Tone detect pause.

>> MFC-J491DW
>> MFC-J690DW/MFC-J890DW

MFC-J491DW

1. Press **Settings**.
2. Press ▲ or ▼ to select the following:
   a. Select [Initial Setup]. Press **OK**.
   b. Select [Dial Tone]. Press **OK**.
   c. Select [Detection] or [No Detection]. Press **OK**.
3. Press **Stop/Exit**.

MFC-J690DW/MFC-J890DW

1. Press [Settings] > [All Settings] > [Initial Setup] > [Dial Tone].
2. Press [Detection] or [No Detection].
3. Press .

Related Information

- Telephone and Fax Problems

Telephone Line Interference/VoIP

Related Models: MFC-J491DW/MFC-J690DW/MFC-J890DW

If you are having problems sending or receiving a fax due to possible interference on the telephone line or if you are using a VoIP system, we recommend changing the modem speed to minimise errors in fax operations.

>> MFC-J491DW
>> MFC-J690DW/MFC-J890DW

MFC-J491DW

1. Press **Settings**.
2. Press ▲ or ▼ to select the following:
   a. Select `[Initial Setup]`. Press **OK**.
   b. Select `[Compatibility]`. Press **OK**.
   c. Select `[Normal]` or `[Basic(for VoIP)]`. Press **OK**.
      - `[Basic(for VoIP)]` reduces the modem speed to 9,600 bps and turns off colour fax receiving and Error Correction Mode (ECM), except for colour fax-sending. Unless interference is a recurring problem on your telephone line, you may prefer to use it only when needed.

        To improve compatibility with most VoIP services, Brother recommends changing the compatibility setting to `[Basic(for VoIP)]`.
      - `[Normal]` sets the modem speed at 14,400 bps.
3. Press **Stop/Exit**.

- VoIP (Voice over IP) is a type of phone system that uses an Internet connection, rather than a traditional phone line.
- Brother does not recommend the use of a VoIP line. VoIP limitations in general can cause some functions of the fax machine not to work correctly.

MFC-J690DW/MFC-J890DW

1. Press `[Settings]` > `[All Settings]` > `[Initial Setup]` > `[Compatibility]`.
2. Press the option you want.
   - `[Basic(for VoIP)]` reduces the modem speed to 9,600 bps and turns off colour fax receiving and Error Correction Mode (ECM), except for colour fax-sending. Unless interference is a recurring problem on your telephone line, you may prefer to use it only when needed.

     To improve compatibility with most VoIP services, Brother recommends changing the compatibility setting to `[Basic(for VoIP)]`.
   - `[Normal]` sets the modem speed at 14,400 bps.
3. Press .

- VoIP (Voice over IP) is a type of phone system that uses an Internet connection, rather than a traditional phone line.
- Brother does not recommend the use of a VoIP line. VoIP limitations in general can cause some functions of the fax machine not to work correctly.

Related Information

- Telephone and Fax Problems

- Voice Over Internet Protocol (VoIP/Telephone Line Interference)
- Error and Maintenance Messages

Other Problems

Copying Difficulties

Difficulties	Suggestions
Black lines or streaks appear in copies. 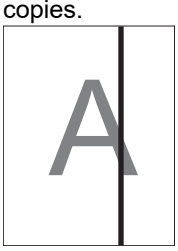	Black lines on copies are typically caused by dirt or correction fluid on the glass strip. Clean the glass strip, scanner glass, and the white bar and white plastic above them. See *Related Information*: *Clean the Scanner*.
Black marks or spots appear in copies.	Black marks or spots on copies are typically caused by dirt or correction fluid on the scanner glass. Clean the scanner glass and white plastic above it. See *Related Information*: *Clean the Scanner*.
Dark lines appear at regular intervals. 	Check and adjust the paper feed. See *Related Information*: *Correct the Paper Feed to Clear Vertical Lines*.
Copies are blank.	Make sure you are loading the document correctly. See *Related Information*: *Load Documents in the Automatic Document Feeder (ADF)*. See *Related Information*: *Load Documents on the Scanner Glass*.
Poor copy results when using the ADF. (ADF models)	Try using the scanner glass. See *Related Information*: *Load Documents on the Scanner Glass*.
Fit to Page does not work correctly.	Make sure the document is not skewed on the scanner glass. Reposition the document and try again.

Scanning Difficulties

Difficulties	Suggestions
TWAIN or WIA errors appear when starting to scan. (Windows)	Make sure the Brother TWAIN or WIA driver is selected as the primary source in your scanning application. For example, in Nuance™ PaperPort™ 14SE, click **Desktop** > **Scan Settings** > **Select** to choose the Brother TWAIN/WIA driver.
OCR does not work.	Try increasing the scanning resolution.
Poor scanning results when using the ADF. (Black lines appear in the scanned data.) (ADF models)	Clean the white bar and the glass strip underneath it. See *Related Information*: *Clean the Scanner*.
	Try using the scanner glass. See *Related Information*: *Load Documents on the Scanner Glass*.

PhotoCapture Center Difficulties (DCP-J572DW/DCP-J772DW/MFC-J690DW/MFC-J890DW)

Difficulties	Suggestions
Removable Disk does not work correctly.	Make sure the Removable Disk function is set to on. If the problem continues, make the following steps: 1. Take out the memory card or USB Flash drive and put it back in again. 2. If you have tried “Eject” from within Windows, take out the memory card or USB Flash drive before you continue. 3. If an error message appears when you try to eject the memory card or USB Flash drive, it means the card is being accessed. Wait a while, and then try again. 4. If all of the above do not work, turn off your computer and machine, and then turn them on again.
Cannot access Removable Disk from the computer.	Make sure the Removable Disk function is set to on and you have correctly inserted the memory card or USB Flash drive.
Part of my photo is missing when printed.	Make sure Borderless printing and Cropping are turned off. See *Related Information*: *Print Borderless Photos from Media*. See *Related Information*: *Print Photos with Auto Cropping*.

Software Difficulties

Difficulties	Suggestions
Cannot print.	Uninstall and reinstall the Brother driver.
“Device Busy” appears on the computer screen.	Make sure the machine is not showing an error message on the machine's display.

Related Information

- If You Are Having Difficulty with Your Machine
- Troubleshooting
- Clean the Scanner
- Correct the Paper Feed to Clear Vertical Lines
- Load Documents in the Automatic Document Feeder (ADF)
- Load Documents on the Scanner Glass
- Print Borderless Photos from Media
- Print Photos with Auto Cropping

Network Problems

- Use the Network Connection Repair Tool (Windows)
- Where Can I Find My Brother Machine's Network Settings?
- I Cannot Complete the Wireless Network Setup Configuration
- My Brother Machine Cannot Print, Scan, or PC-FAX Receive over the Network
- I Want to Check that My Network Devices are Working Correctly
- Troubleshooting

Use the Network Connection Repair Tool (Windows)

Use the Network Connection Repair Tool to fix the Brother machine's network settings. It will assign the correct IP address and Subnet Mask.

- Windows 7/Windows 8/Windows 10
  You must log on with Administrator rights.
- Make sure the Brother machine is turned on and is connected to the same network as your computer.

1. Do one of the following:

Option	Description
Windows 7	Click (Start) > **All Programs** > **Brother** > **Brother Utilities**. Click the drop-down list and select your model name (if not already selected). Click **Tools** in the left navigation bar, and then click **Network Connection Repair Tool**.
Windows 8/ Windows 10	Launch (**Brother Utilities**), and then click the drop-down list and select your model name (if not already selected). Click **Tools** in the left navigation bar, and then click **Network Connection Repair Tool**.

- If the **User Account Control** screen appears, click **Yes**.

2. Follow the on-screen instructions.
3. Check the diagnosis by printing the Network Configuration Report.

The Network Connection Repair Tool will start automatically if you select the **Enable Connection Repair Tool** option in the Status Monitor. Right-click the Status Monitor screen, and then click **Other Settings** > **Enable Connection Repair Tool**. This is not recommended when your network administrator has set the IP address to Static, since it will automatically change the IP address.

If the correct IP address and the Subnet Mask are still not assigned even after using the Network Connection Repair Tool, ask your network administrator for this information.

Related Information

- Network Problems
- Print the Network Configuration Report
- My Brother Machine Cannot Print, Scan, or PC-FAX Receive over the Network
- I Want to Check that My Network Devices are Working Correctly

Where Can I Find My Brother Machine's Network Settings?

- Change Machine Settings from Your Computer
- Print the Network Configuration Report

I Cannot Complete the Wireless Network Setup Configuration

Turn your wireless router off and back on. Then try to configure the wireless settings again. If you are unable to resolve the problem, follow the instructions below:

Investigate the problem using the WLAN Report.

Cause	Action	Interface
Your security settings (SSID/ Network Key) are not correct.	• Confirm the security settings using the Wireless Setup Helper utility. For more information and to download the utility, go to your model's **Downloads** page on the Brother Solutions Center at support.brother.com. • Select and confirm that you are using the correct security settings. - See the instructions supplied with your wireless LAN access point/router for information on how to find the security settings. - The manufacturer's name or model number of the wireless LAN access point/router may be used as the default security settings. - Consult with the access point/router manufacturer, your Internet provider, or network administrator.	Wireless
Your Brother machine's MAC address is not allowed.	Confirm that the Brother machine's MAC Address is allowed in the filter. You can find the MAC Address on your Brother machine's control panel.	Wireless
Your wireless LAN access point/router is in stealth mode (not broadcasting the SSID).	• Enter the correct SSID name or Network Key manually. • Check the SSID name or the Network Key in the instructions supplied with your wireless LAN access point/router and reconfigure the wireless network setup.	Wireless
Your security settings (SSID/ password) are not correct.	• Confirm the SSID and password. - When you are configuring the network manually, the SSID and password are displayed on your Brother machine. If your mobile device supports the manual configuration, the SSID and password will be displayed on your mobile device's screen.	Wi-Fi Direct
You are using Android™ 4.0.	If your mobile device disconnects (approximately six minutes after using Wi-Fi Direct), try the one-push configuration using WPS (recommended) and set the Brother machine as a G/O.	Wi-Fi Direct
Your Brother machine is placed too far from your mobile device.	Move your Brother machine within about 3.3 feet (1 metre) of the mobile device when you configure the Wi-Fi Direct network settings.	Wi-Fi Direct
There are some obstructions (walls or furniture, for example) between your machine and the mobile device.	Move your Brother machine to an obstruction-free area.	Wi-Fi Direct
There is a wireless computer, Bluetooth-supported device, microwave oven, or digital cordless phone near the Brother machine or the mobile device.	Move other devices away from the Brother machine or the mobile device.	Wi-Fi Direct
If you have checked and tried all of the above, but still cannot complete the Wi-Fi	• Turn your Brother machine off and back on. Then try to configure the Wi-Fi Direct settings again.	Wi-Fi Direct

Cause	Action	Interface
Direct configuration, do the following:	• If you are using your Brother machine as a client, confirm how many devices are allowed in the current Wi-Fi Direct network, and then check how many devices are connected.	

For Windows

If your wireless connection has been interrupted, and you have checked and tried all of the above, we recommend using the Network Connection Repair Tool.

Related Information

- Network Problems
- Configure Your Machine for a Wireless Network When the SSID is Not Broadcast
- Use Wi-Fi Direct®

My Brother Machine Cannot Print, Scan, or PC-FAX Receive over the Network

Cause	Action	Interface
Your security software blocks your machine's access to the network. (The Network scanning feature does not work.)	• Windows Configure the third-party Security/Firewall Software to allow Network scanning. To add port 54925 for Network scanning, type the information below: - In **Name**: Type any description, for example Brother NetScan. - In **Port number**: Type 54925. - In **Protocol**: UDP is selected. See the instruction manual that came with your third-party Security/Firewall Software or contact the software manufacturer. • Mac (Brother iPrint&Scan) In the **Finder** menu bar, click **Go** > **Applications**, and then double-click the Brother iPrint&Scan icon. The Brother iPrint&Scan window appears. Click the **Select your Machine** button, and then follow the on-screen instructions to reselect your network machine. (TWAIN driver) In the **Finder** menu bar, click **Go** > **Applications** > **Brother**, and then double-click the Device Selector icon. The Device Selector window appears. Reselect your network machine, make sure **Status** is **idle**, and then click **OK**.	Wired/Wireless
Your security software blocks your machine's access to the network. (The network PC-Fax Receive feature does not work.) (Windows)	Set the third-party Security/Firewall Software to allow PC-FAX Rx. To add port 54926 for Network PC-FAX Rx, type the information below: • In **Name**: Type any description, for example Brother PC-FAX Rx. • In **Port number**: Type 54926. • In **Protocol**: UDP is selected. See the instruction manual that came with your third-party Security/Firewall Software or contact the software manufacturer.	Wired/Wireless
Your security software blocks your machine's access to the network.	Some security software might block access without showing a security alert dialog box even after successful installation. To allow access, see the instructions for your security software or ask the software manufacturer.	Wired/Wireless
Your Brother machine was not assigned an available IP address.	• Confirm the IP address and the Subnet Mask. Verify that both the IP addresses and Subnet Masks of your computer and the Brother machine are correct and located on the same network. For more information about how to verify the IP address and the Subnet Mask, ask your network administrator. • Windows Confirm the IP address and the Subnet Mask using the Network Connection Repair Tool. • Mac	Wired/Wireless

Cause	Action	Interface
	Check your network devices using the ping command. For more information on how to confirm your network settings, see *Related Information*:*Check Network Devices Using the Ping Command*.	
The failed print job is still in your computer's print queue.	• If the failed print job is still in your computer's print queue, delete it. • Otherwise, double-click the printer icon in the following folder and cancel all documents: - Windows 7 Click (Start) > **Devices and Printers** > **Printers and Faxes**. - Windows 8 Move your mouse to the lower right corner of your desktop. When the menu bar appears, click **Settings** > **Control Panel**. In the **Hardware and Sound** group, click **View devices and printers** > **Printers**. - Windows 10 and Windows Server 2016 Click > **Windows System** > **Control Panel**. In the **Hardware and Sound** group, click **View devices and printers** > **Printers**. - Windows Server 2008 Click **Start** > **Control Panel** > **Printers**. - Windows Server 2012 Move your mouse to the lower right corner of your desktop. When the menu bar appears, click **Settings** > **Control Panel**. In the **Hardware** group, click **View devices and printers** > **Printers**. - Windows Server 2012 R2 Click **Control Panel** on the **Start** screen. In the **Hardware** group, click **View devices and printers**. - macOS v10.10.5, v10.11.x, v10.12 Click **System Preferences** > **Printers & Scanners**.	Wired/Wireless
Your Brother machine is not connected to the wireless network.	Print the WLAN Report to check the error code on the printed report.	Wireless

If you have checked and tried all of the above, but your Brother machine still cannot print and scan, uninstall the Brother software and drivers and reinstall them.

Related Information

- Network Problems
- Print the WLAN Report
- Use the Network Connection Repair Tool (Windows)
- Wireless LAN Report Error Codes
- Check Network Devices Using the Ping Command
- I Want to Check that My Network Devices are Working Correctly

I Want to Check that My Network Devices are Working Correctly

Check	Action	Interface
Check that your Brother machine, access point/ router, or network hub is turned on.	**Check the following:** • The power cord is connected correctly and the Brother machine is turned on. • The access point/router or hub is turned on and its link button is blinking. • All protective packaging has been removed from the machine. • The ink cartridges are installed correctly. • The Scanner Cover and the Jam Clear Cover are fully closed. • Paper is inserted correctly in the paper tray. • (For wired networks) A network cable is securely connected to the Brother machine and to the router or hub.	Wired/Wireless
Check that you can "ping" the Brother machine from your computer.	Ping the Brother machine from your computer using the IP address or the node name in the Windows command prompt or Mac Terminal application: ping `<ipaddress>` or `<nodename>`. • Successful: Your Brother machine is working correctly and connected to the same network as your computer. • Unsuccessful: Your Brother machine is not connected to the same network as your computer. (Windows) Ask the network administrator and use the Network Connection Repair Tool to fix the IP address and the subnet mask. (Mac) Confirm that the IP address and the Subnet Mask are set correctly.	Wired/Wireless
Check that your Brother machine is connected to the wireless network.	Print the WLAN Report to check the error code on the printed report.	Wireless

If you have checked and tried all of the above but you are still having problems, see the instructions supplied with your wireless LAN access point/router to find the SSID and the Network Key information and set them correctly.

Related Information

- Network Problems
- Check Network Devices Using the Ping Command
- Print the Network Configuration Report
- Print the WLAN Report
- Use the Network Connection Repair Tool (Windows)
- My Brother Machine Cannot Print, Scan, or PC-FAX Receive over the Network
- Wireless LAN Report Error Codes

Check Network Devices Using the Ping Command

Check the IP addresses of both your computer and your Brother machine, and then confirm whether the network is operating correctly.

>> Configure the IP Address on your computer (Windows)
>> Configure the IP Address on your computer (Mac)
>> Configure the IP Address on your Brother machine

Configure the IP Address on your computer (Windows)

1. Do one of the following:
   - Windows7

     Click /**Start** > **All Programs** > **Accessories** > **Command Prompt**
   - Windows 8

     Move your mouse to the lower right corner of your desktop. When the menu bar appears, click **Search** > **Command Prompt**.
   - Windows 10

     Click > **Windows System** > **Command Prompt**.
2. Type "ipconfig" and then press the Enter key on your keyboard.
3. Confirm the values for the IPv4 address and subnet mask.
4. Type "exit" and then press the Enter key on your keyboard.

Configure the IP Address on your computer (Mac)

1. Select **System Preferences** from the Apple menu.
2. Click **Network** > **Advanced** > **TCP/IP**
3. Confirm the values for the IPv4 address and subnet mask.

Configure the IP Address on your Brother machine

Print the Network Configuration Report, and confirm the values for the IP address and subnet mask.

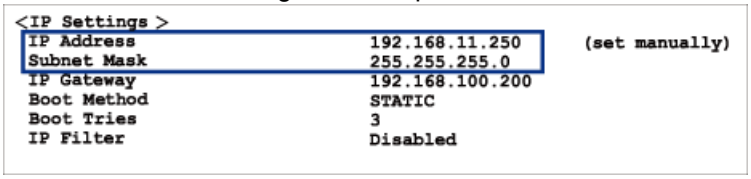

Check the IP addresses for both your computer and your Brother machine. Confirm that the network address portions are the same. For example, if the subnet mask is "255.255.255.0", it is normal for only the host address portions to be different.

	Network Address	Host Address	
IP Address	192.168.100.	250	Set the final number, which corresponds to "0" in the subnet mask, to 1–254.
Subnet Mask	255.255.255.	0	Usually, there are no problems when the subnet mask is "255.255.255.0". Use the same value for all of your computers.

Related Information

- I Want to Check that My Network Devices are Working Correctly

- My Brother Machine Cannot Print, Scan, or PC-FAX Receive over the Network

Google Cloud Print Problems

Difficulty	Suggestions
My Brother machine is not displayed in the printer list.	Make sure your machine is turned on.
	Confirm that Google Cloud Print™ is enabled.
	Confirm that your machine is registered with Google Cloud Print™. If it is not registered, try to register again.
I cannot print.	Make sure your machine is turned on.
	Confirm your network settings. See *Related Information*.
	Certain files may not be printable, or may not appear exactly as they are displayed.
I cannot register my Brother machine with Google Cloud Print™.	Make sure your machine is connected to a network with Internet access.
	Verify that the date and time are set correctly on your machine.
I do not see a confirmation message on my Brother machine when I try to register with Google Cloud Print™, even after repeating the registration steps.	Make sure your Brother machine is idle while you are registering with Google Cloud Print™.

Related Information

- If You Are Having Difficulty with Your Machine
- Troubleshooting
- Network Settings for Using Google Cloud Print

AirPrint Problems

Difficulty	Suggestions
My Brother machine is not displayed in the printer list.	Make sure your Brother machine is turned on.
	Confirm the network settings.
	Move the mobile device closer to the wireless access point/router, or to your Brother machine.
I cannot print.	Make sure your Brother machine is turned on.
	Confirm the network settings.
I am trying to print a multiple-page document from an iOS device, but ONLY the first page is printing.	Make sure you are running the latest OS version. Refer to the following Apple support article for more information about AirPrint: support.apple.com/kb/HT4356.

Related Information

- If You Are Having Difficulty with Your Machine
- Troubleshooting

Check the Machine Information

Follow these instructions to check your Brother machine's serial number, firmware version, and firmware update.

>> DCP-J572DW/MFC-J491DW
>> DCP-J772DW/MFC-J690DW/MFC-J890DW

DCP-J572DW/MFC-J491DW

1. Press **Settings**.
2. Press ▲ or ▼ to select [Machine Info.]. Press **OK**.
3. Press ▲ or ▼ to select one of the following options:

Option	Description
Serial No.	Check your machine's serial number.
Firmware Version	Check your machine's firmware version.
Firmware Update	Update your machine to the latest firmware.
Firmware Auto Check	View firmware information on the Home screen.

4. Press **OK**.
5. Press **Stop/Exit**.

DCP-J772DW/MFC-J690DW/MFC-J890DW

1. Press [Settings] > [All Settings] > [Machine Info.].
2. Press one of the following options:

Option	Description
Serial No.	Check your machine's serial number.
Firmware Version	Check your machine's firmware version.
Firmware Update	Update your machine to the latest firmware.
Firmware Auto Check	View firmware information on the Home screen.

3. Press .

Related Information

- Troubleshooting

Reset Your Brother Machine

IMPORTANT

(MFC-J491DW/MFC-J690DW)

When you reset the machine, your faxes that are stored in the machine's memory may be deleted. Before you reset the machine, you can transfer your faxes to your computer or another fax machine so you will not lose any important messages.

>> DCP-J572DW/MFC-J491DW
>> DCP-J772DW/MFC-J690DW/MFC-J890DW

DCP-J572DW/MFC-J491DW

1. Press **Settings**.
2. Press ▲ or ▼ to select the following:
   a. Select [Initial Setup]. Press **OK**.
   b. Select [Reset]. Press **OK**.
   c. Select the reset option you want to use. Press **OK**.
3. Press ▶ for two seconds to confirm.

   The machine restarts.

DCP-J772DW/MFC-J690DW/MFC-J890DW

1. Press [Settings] > [All Settings] > [Initial Setup] > [Reset].
2. Press the reset option you want to use.
3. Press [OK] for two seconds to reboot the machine.

Related Information

- Troubleshooting
- Reset Functions Overview
- Transfer Your Faxes or Fax Journal Report

Reset Functions Overview

IMPORTANT

(MFC-J491DW/MFC-J690DW)

When you reset the machine, your faxes that are stored in the machine's memory may be deleted. Before you reset the machine, you can transfer your faxes to your computer or another fax machine so you will not lose any important messages.

The following reset functions are available:

1. `[Machine Reset]`

   You can reset all the machine's settings that you have changed, such as Date and Time and Ring Delay.

   The Address Book, Fax Reports, and Call History will remain. (MFC models)

2. `[Network]`

   Reset the print server back to its default factory settings (includes Password and IP Address information).

3. `[Address Book & Fax]` (MFC models)

   Address Book & Fax resets the following settings:

   - Address Book and Setup Groups
   - Programmed fax jobs in the memory (MFC-J690DW/MFC-J890DW)

     Delayed Fax and Delayed Batch Transmission
   - Station ID

     Name and Number
   - Remote Fax Options (MFC-J690DW/MFC-J890DW)
   - Report

     Transmission Verification Report, Address Book and Fax Journal
   - History

     Caller ID history [1] and Outgoing Call
   - Faxes in memory

4. `[All Settings]`

   Use the Settings Reset function to reset all machine's settings to the settings originally set at the factory.

   Brother strongly recommends you perform this operation when you dispose of the machine.

(MFC-J890DW)

Unplug the interface cable before you select `[Network]` or `[All Settings]`.

Related Information

- Reset Your Brother Machine
- Transfer Your Faxes or Fax Journal Report

1 (Not available for Taiwan and some countries)

Routine Maintenance

- Replace the Ink Cartridges
- Clean Your Brother Machine
- Check Your Brother Machine
- Correct the Paper Feed to Clear Vertical Lines
- Change the Print Setting Options When Having Printing Problems
- Pack and Ship Your Brother Machine

Replace the Ink Cartridges

Your Brother machine is equipped with an ink dot counter. The ink dot counter automatically monitors the level of ink in each of the four cartridges. When the machine detects an ink cartridge is running out of ink, the machine will display a message.

The LCD displays which ink cartridge is low or needs replacing. Be sure to follow the LCD prompts to replace the ink cartridges in the correct order.

Even though the machine tells you to replace an ink cartridge, there will be a small amount of ink left in the ink cartridge. It is necessary to keep some ink in the ink cartridge to prevent air from drying out and damaging the print head assembly.

⚠ CAUTION

If ink gets in your eyes, wash it out with water at once and call a doctor if you are concerned.

IMPORTANT

Brother strongly recommends that you do not refill the ink cartridges provided with your machine. We also strongly recommend that you continue to use only Brother Original replacement ink cartridges. Use or attempted use of potentially incompatible ink and/or cartridges in the Brother machine may cause damage to the machine and/or may result in unsatisfactory print quality. Our warranty coverage does not apply to any problem that is caused by the use of unauthorised third-party ink and/or cartridges. To protect your investment and obtain premium performance from the Brother machine, we strongly recommend the use of Brother Original ink cartridges.

1. Open the ink cartridge cover (1).

   If one or more of the ink cartridges needs replacing, the LCD displays `[B&W Print Only]`, `[B&W 1-sided Print Only]` or `[Replace Ink]`.

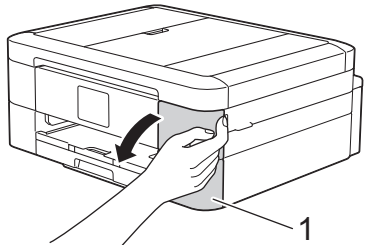

If the black cartridge is empty, the only message that will appear is `[Replace Ink]`. You must replace the black cartridge.

2. Press the lock release lever to release the cartridge colour indicated on the LCD and remove the cartridge from the machine, as shown in the illustration.

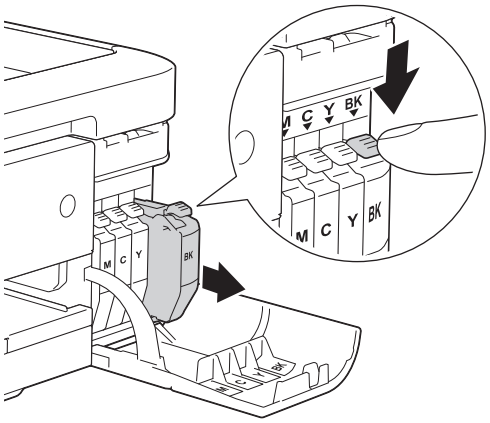

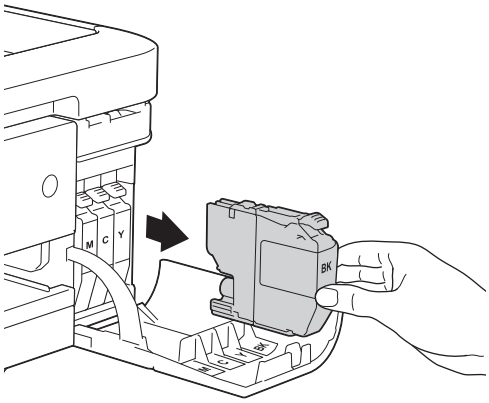

3. Open the new ink cartridge bag for the colour indicated on the LCD, and take out the ink cartridge.

IMPORTANT

- DO NOT touch the cartridge in the area indicated (1); this can prevent the machine from detecting the cartridge.

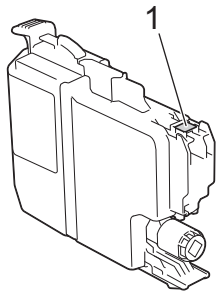

- Quickly shake just the **black** ink cartridge horizontally 15 times as shown, before inserting it into the machine.

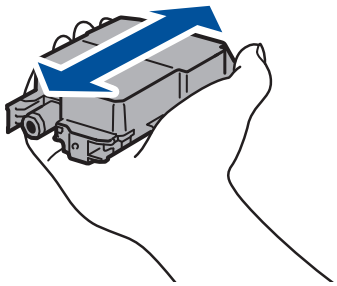

4. Insert the ink cartridge in the direction of the arrow on the label.

   Each colour has its own correct position.

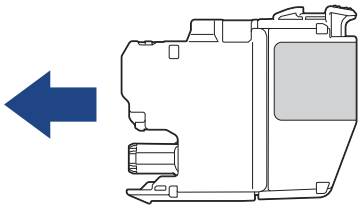

5. Gently push the area marked “PUSH” until the ink cartridge locks into place, and then close the ink cartridge cover.

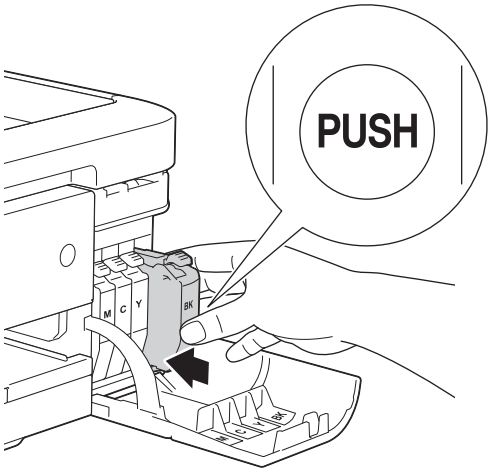

The machine will automatically reset the ink dot counter.

If the LCD displays [No Ink Cartridge] or [Cannot Detect] after you install the ink cartridge, check that the ink cartridge is installed correctly. Remove the ink cartridge and reinstall it slowly until it locks into place.

IMPORTANT

- DO NOT shake the ink cartridges. If ink stains your skin or clothing, wash with soap or detergent at once.
- DO NOT take out ink cartridges if you do not need to replace them; the machine will not know the quantity of ink left in the cartridge.
- DO NOT touch the cartridge insertion slots; the ink may stain your skin.
- If you mix the colours by installing an ink cartridge in the wrong position, the LCD shows [Wrong Ink Colour].

  Check which ink cartridges are not matched by colour to their ink cartridge positions and move them to their proper positions.
- When you open an ink cartridge, install it in the machine and use it up within six months of installation. Use unopened ink cartridges by the expiration date written on the cartridge package.
- DO NOT dismantle or tamper with the ink cartridge; this can cause the ink to leak out of the cartridge.

Related Information

- Routine Maintenance
- Error and Maintenance Messages
- Paper Handling and Printing Problems
- Pack and Ship Your Brother Machine

Clean Your Brother Machine

- Clean the Scanner
- Clean the Print Head from Your Brother Machine
- Clean the Print Head from Your Computer (Windows)
- Clean the Print Head from Your Computer (Mac)
- Clean the Machine's LCD
- Clean the Outside of the Machine
- Clean the Machine's Printer Platen
- Clean the Paper Feed Rollers
- Clean the Base Pad
- Clean the Paper Pick-up Rollers

Clean the Scanner

1. Unplug the machine from the electrical socket.
2. Lift the document cover (1). Clean the scanner glass (2) and the white plastic (3) with a soft lint-free cloth moistened with water.

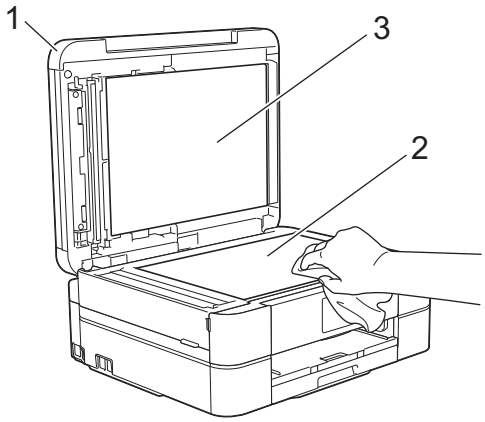

3. In the ADF unit, clean the white bar (1) and the glass strip (2) with a lint-free cloth moistened with water. (ADF models only)

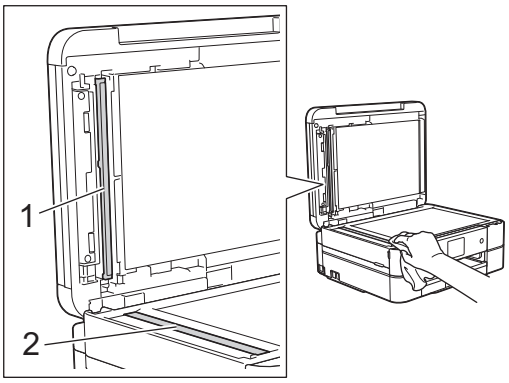

(ADF models only)

In addition to cleaning the scanner glass and glass strip with a soft lint-free cloth moistened with water, run your fingertip over the glass to see if you can feel anything on it. If you feel dirt or debris, clean the glass again concentrating on that area. You may need to repeat the cleaning process three or four times. To test, make a copy after each cleaning attempt.

When there is a spot of dirt or correction fluid on the glass strip, the printed sample shows a vertical line.

After the glass strip is cleaned, the vertical line is gone.

Related Information

- Clean Your Brother Machine
- Telephone and Fax Problems
- Other Problems

Clean the Print Head from Your Brother Machine

To maintain good print quality, the machine automatically cleans the print head when needed. If there is a print quality problem, start the cleaning process manually.

- Clean the print head if there is a horizontal line or a blank space in the text or graphics on printed pages. Depending on the problem colour, select to clean Black only, three colours at a time (Yellow/Cyan/Magenta), or all four colours at once.
- Cleaning the print head consumes ink.
- Cleaning too often uses ink unnecessarily.

IMPORTANT

DO NOT touch the print head. Touching the print head may cause permanent damage and may void the print head's warranty.

>> DCP-J572DW/MFC-J491DW
>> DCP-J772DW/MFC-J690DW/MFC-J890DW

DCP-J572DW/MFC-J491DW

1. Press **Settings**.
2. Press ▲ or ▼ to select the following:
   a. Select `[General Setup]`. Press **OK**.
   b. Select `[Maintenance]`. Press **OK**.
   c. Select `[Print Head Cleaning]`. Press **OK**.
   d. Select `[Black only]`, `[Colour only]`, or `[All]`. Press **OK**.
   e. Select `[Normal]`, `[Strong]`, or `[Strongest]`. Press **OK**.
3. Press ▶.

   The machine cleans the print head.

- If you clean the print head and the print has not improved, try installing a new Genuine Brother Brand replacement ink cartridge for each problem colour. Try cleaning the print head again. If the print has not improved, contact Brother customer service or your local Brother dealer.
- You can also clean the print head from your computer.

DCP-J772DW/MFC-J690DW/MFC-J890DW

1. Press `[Settings]` > `[Maintenance]` > `[Print Head Cleaning]`.
2. Press `[Black only]`, `[Colour only]`, or `[All]`.
3. Press `[Normal]`, `[Strong]`, or `[Strongest]`.
4. Press `[Start]`.

   The machine cleans the print head.

- If you clean the print head and the print has not improved, try installing a new Brother Original replacement ink cartridge for each problem colour. Try cleaning the print head again. If the print has not improved, contact Brother customer service or your local Brother dealer.
- You can also clean the print head from your computer.

Related Information

- Clean Your Brother Machine
- Paper Handling and Printing Problems
- Clean the Print Head from Your Computer (Windows)
- Clean the Print Head from Your Computer (Mac)

Clean the Print Head from Your Computer (Windows)

To maintain good print quality, the machine automatically cleans the print head when needed. If there is a print quality problem, start the cleaning process manually.

1. Do one of the following:
   - For Windows Server 2008

     Click **(Start)** > **Control Panel** > **Hardware and Sound** > **Printers**.
   - For Windows 7 and Windows Server 2008 R2

     Click **(Start)** > **Devices and Printers**.
   - For Windows 8

     Move your mouse to the lower right corner of your desktop. When the menu bar appears, click **Settings**, and then click **Control Panel**. In the **Hardware and Sound** group, click **View devices and printers**.
   - For Windows Server 2012

     Move your mouse to the lower right corner of your desktop. When the menu bar appears, click **Settings**, and then click **Control Panel**. In the **Hardware** group, click **View devices and printers**.
   - For Windows Server 2012 R2

     Click **Control Panel** on the **Start** screen. In the **Hardware** group, click **View devices and printers**.
   - For Windows 10 and Windows Server 2016

     Click > **Windows System** > **Control Panel**. In the **Hardware and Sound** group, click **View devices and printers**.
2. Right-click the **Brother MFC-XXXX Printer** icon (where XXXX is your model name), and then select **Printing preferences**. If printer driver options appear, select your printer driver.

   The printer driver dialog box appears.
3. Click the **Maintenance** tab.
4. Select one of the following options:

Option	Description
Check Print Quality...	Use to print the test page and check the print quality.
Print Head Cleaning...	Use to start the cleaning process manually. Select if a line or blank spaces appear in text or graphics on the test page.

5. Do one of the following:
   - If you selected the **Check Print Quality...** option, click **Start**.

     The machine prints the test page.
   - If you selected the **Print Head Cleaning...** option, select the **Black only**, **Colour only**, or **All** option for the cleaning type, and then click **Next**.
6. Select the **Normal**, **Strong**, or **Strongest** option for the cleaning strength, and then click **Next**.
7. Click **Start**.

   The machine starts cleaning.

Related Information

- Clean Your Brother Machine
- Paper Handling and Printing Problems
- Clean the Print Head from Your Brother Machine

Clean the Print Head from Your Computer (Mac)

To maintain good print quality, the machine automatically cleans the print head when needed. If there is a print quality problem, start the cleaning process manually.

1. Select **System Preferences** from the Apple menu.
2. Select **Printers & Scanners**, and then select the machine.
3. Click the **Options & Supplies** button.
4. Click the **Utility** tab, and then click the **Open Printer Utility** button.

   The Status Monitor screen appears.
5. Click the **Control** menu, and then select **Maintenance**.
6. Select one of the following options:

Option	Description
Check Print Quality...	Use to print the test page and check the print quality.
Print Head Cleaning...	Use to start the cleaning process manually. Select if a line or blank spaces appear in text or graphics on the test page.

7. Do one of the following:
   - If you selected the **Check Print Quality...** option, click **Start**.

     The machine prints the test page.
   - If you selected the **Print Head Cleaning...** option, select **Black only**, **Color only**, or **All** option for the cleaning type, and then click **Next**.
8. Select the **Normal**, **Strong**, or **Strongest** option for the cleaning strength, and then click **Next**.
9. Click **Start**.

   The machine starts cleaning.

Related Information

- Clean Your Brother Machine
- Paper Handling and Printing Problems
- Clean the Print Head from Your Brother Machine

Clean the Machine's LCD

IMPORTANT

DO NOT use liquid cleaners (including ethanol).

1. Press and hold down to turn off the machine. The LCD displays `[Shutting Down]` for a few seconds before the power goes off.
2. Clean the LCD with a dry, soft lint-free cloth.

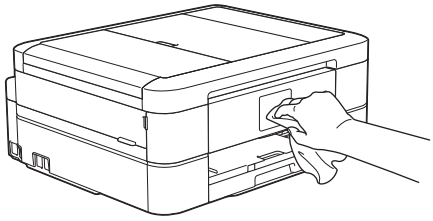

Related Information

- Clean Your Brother Machine

Clean the Outside of the Machine

IMPORTANT

- Cleaning with volatile liquids such as thinner or benzine will damage the outside surface of the machine.
- DO NOT use cleaning materials that contain ammonia.
- DO NOT use isopropyl alcohol to remove dirt from the control panel. It may crack the panel.

1. If the paper support flap is open, close it, and then close the paper support.
2. Pull the paper tray (1) completely out of the machine.

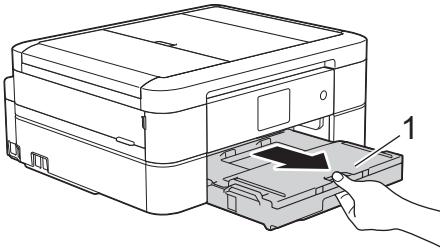

3. Wipe the outside of the machine with a dry, lint-free cloth to remove dust.

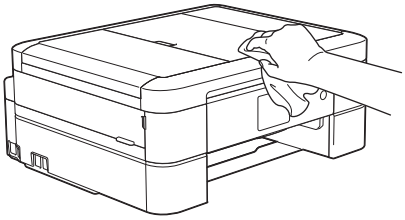

4. Lift the output paper tray cover and remove anything that is stuck inside the paper tray.

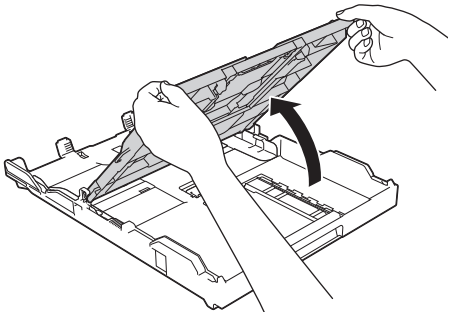

5. Wipe the inside and the outside of the paper tray with a dry, lint-free cloth to remove dust.

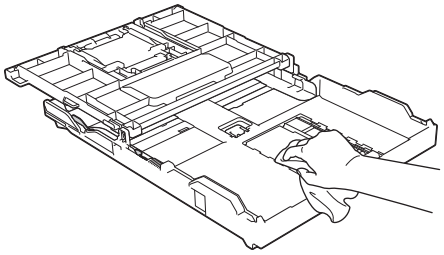

6. Close the output paper tray cover and slowly push the paper tray completely into the machine.

Related Information

- Clean Your Brother Machine

Clean the Machine's Printer Platen

WARNING

Be sure to unplug the machine from the electrical socket before cleaning the printer platen to avoid an electrical shock.

1. Using both hands, use the finger holds on each side of the machine to lift the scanner cover into the open position.
2. Clean the machine's printer platen (1) and the area around it, wiping off scattered ink with a dry, soft lint-free cloth.

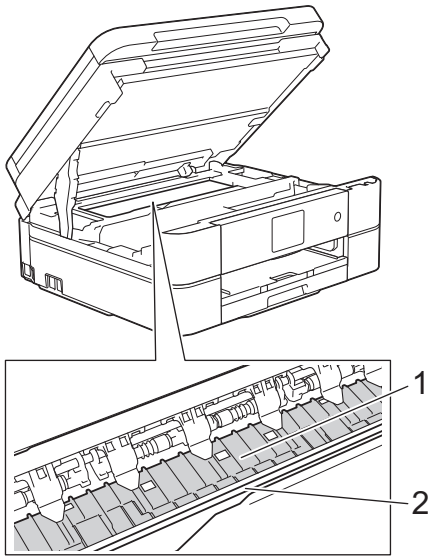

IMPORTANT

DO NOT touch the encoder strip, the thin strip of plastic that stretches across the width of the machine (2). Doing this may cause damage to the machine.

3. Gently close the scanner cover using both hands.

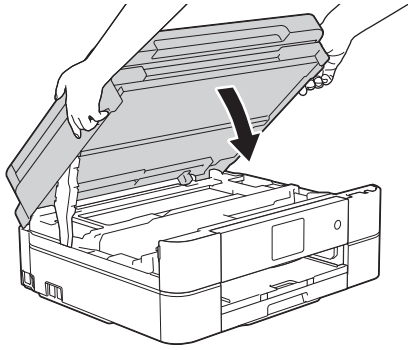

4. Reconnect the power cord.

Related Information

- Clean Your Brother Machine
- Paper Handling and Printing Problems

Clean the Paper Feed Rollers

If the paper feed rollers are stained with ink or have a buildup of paper dust, it may cause paper feed problems.

A Paper Pick-Up Rollers Cleaning Kit is supplied with your machine in some countries. Clean the paper feed rollers using the kit. For more information, see the instructions provided with the cleaning kit.

1. Unplug the machine from the electrical socket.
2. If the paper support flap is open, close it, and then close the paper support.
3. Pull the paper tray (1) completely out of the machine.

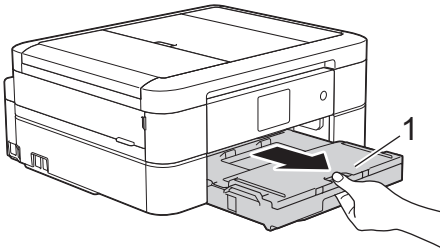

4. Clean the front side of the Paper Feed Rollers (1) with a soft lint-free cloth moistened with water, using a side-to-side motion. After cleaning, wipe the rollers with a dry, soft lint-free cloth to remove all moisture.

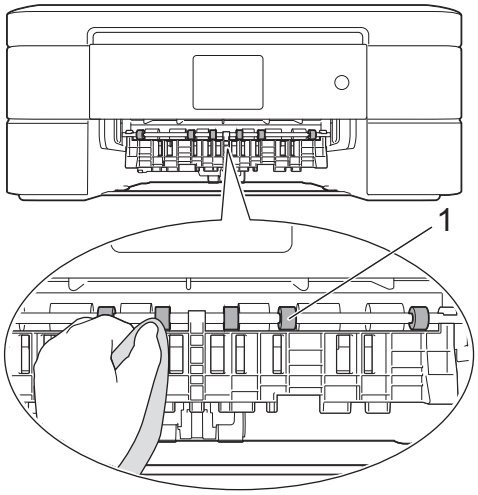

5. Lift the Jam Clear Flap (2), and then clean the back side of the Paper Feed Rollers (1) with a soft lint-free cloth moistened with water. After cleaning, wipe the rollers with a dry, soft lint-free cloth to remove all moisture.

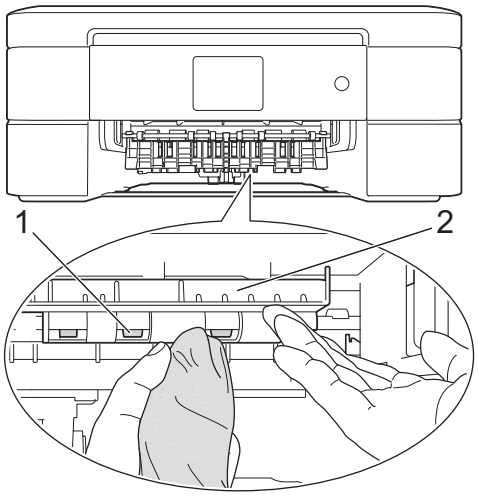

6. Slowly push the paper tray completely into the machine.
7. Reconnect the power cord.

Do not use the machine again until the rollers are dry. Using the machine before the rollers are dry may cause paper feed problems.

Related Information

- Clean Your Brother Machine
- Paper Handling and Printing Problems

Clean the Base Pad

Cleaning the Base Pad periodically may prevent the machine from feeding multiple sheets of paper when there are only a few sheets of paper left in the tray.

1. If the paper support flap is open, close it, and then close the paper support.
2. Pull the paper tray (1) completely out of the machine.

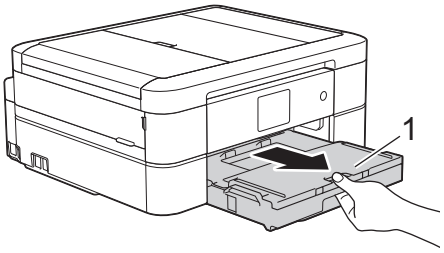

3. Clean the Base Pad (1) with a soft lint-free cloth moistened with water.

   For DCP-J572DW/DCP-J772DW/MFC-J690DW, clean also the Base Pad (2) for the photo paper tray with a soft lint-free cloth moistened with water.

   After cleaning, wipe the pad with a dry, soft lint-free cloth to remove all moisture.

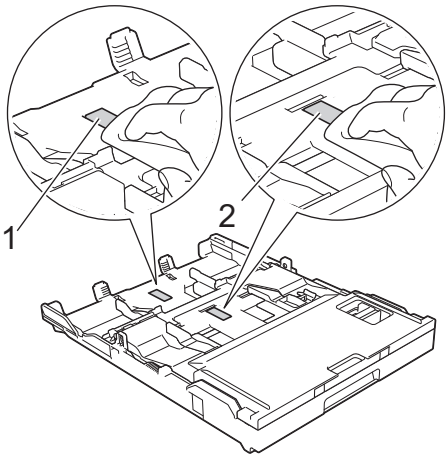

4. Slowly push the paper tray completely into the machine.

Related Information

- Clean Your Brother Machine
- Paper Handling and Printing Problems

Clean the Paper Pick-up Rollers

Cleaning the paper pick-up rollers periodically may prevent paper jams by ensuring that paper feeds correctly.

1. Unplug the machine from the electrical socket.
2. If the paper support flap (1) is open, close it, and then close the paper support (2).

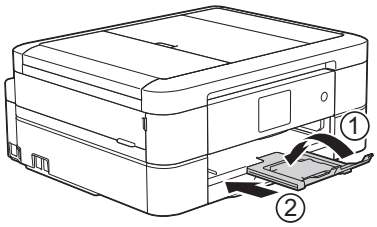

3. Pull the paper tray completely out of the machine.
4. Clean the Paper Pick-up Rollers (1) with a soft lint-free cloth moistened with water. Slowly turn the rollers so that the whole surface is cleaned. After cleaning, wipe the rollers with a dry, soft lint-free cloth to remove all moisture.

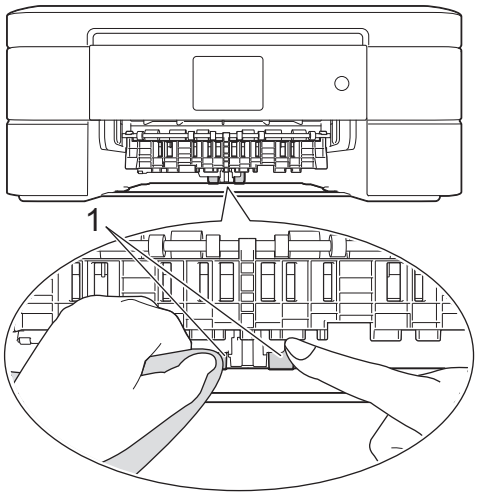

5. Slowly push the paper tray completely into the machine.
6. Reconnect the power cord.

Related Information

- Clean Your Brother Machine
- Error and Maintenance Messages
- Paper Handling and Printing Problems

Check Your Brother Machine

- Check the Print Quality
- Check the Print Alignment from Your Brother Machine
- Check the Ink Volume
- Monitor Machine Status from Your Computer (Windows)
- Monitor Machine Status from Your Computer (Mac)

Check the Print Quality

If faded or streaked colours and text appear or if text is missing on your printouts, the print head nozzles may be clogged. Print the Print Quality Check Sheet and look at the nozzle check pattern.

>> DCP-J572DW/MFC-J491DW
>> DCP-J772DW/MFC-J690DW/MFC-J890DW

DCP-J572DW/MFC-J491DW

1. Press **Settings**.
2. Press ▲ or ▼ to select the following:
   a. Select `[General Setup]`. Press **OK**.
   b. Select `[Maintenance]`. Press **OK**.
   c. Select `[Impr. PrintQuality]`. Press **OK**.
   d. Select `[Impr. PrintQuality]` again. Press **OK**.
3. Press ▶.
   The machine prints the Print Quality Check Sheet.
4. Check the quality of the four colour blocks on the sheet.
5. The LCD asks about the print quality. Do one of the following:
   - If all lines are clear and visible, press ◀ to select `[No]`.
     The Print Quality check finishes.
   - If lines are missing (see **Poor**, below), press ▶ to select `[Yes]`.
     OK
     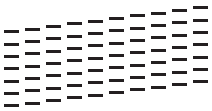
     Poor
     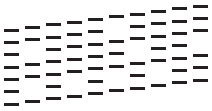
6. The LCD asks you to check the print quality of each colour. Press ◀ or ▶ to select the pattern (1–4) that most closely matches the printing result, and then press **OK**.
7. Do one of the following:
   - If print head cleaning is needed, press ▶ to start the cleaning procedure.
   - If print head cleaning is not needed, the Ink or Maintenance screen reappears on the LCD.
8. After the cleaning procedure is finished, the LCD asks if you want to check the print quality again.
   Press ▶ `[Yes]` to start the print quality check.
9. Press ▶ again.
   The machine prints the Print Quality Check Sheet again. Check the quality of the four colour blocks on the sheet again.

If you clean the print head and the print has not improved, try installing a new Genuine Brother Brand replacement ink cartridge for each problem colour. Try cleaning the print head again. If the print has not improved, contact Brother customer service or your local Brother dealer.

IMPORTANT

DO NOT touch the print head. Touching the print head may cause permanent damage and may void the print head's warranty.

When a print head nozzle is clogged, the printed sample looks like this.

After the print head nozzle is cleaned, the horizontal lines are gone.

DCP-J772DW/MFC-J690DW/MFC-J890DW

1. Press [Settings] > [Maintenance] > [Improve Print Quality] > [Check Print Quality].
2. Press [Start].

   The machine prints the Print Quality Check Sheet.
3. Check the quality of the four colour blocks on the sheet.
4. The touchscreen asks about the print quality. Do one of the following:
   - If all lines are clear and visible, press [No], and then press to finish the Print Quality check.
   - If lines are missing (see **Poor**, as follows), press [Yes].

     OK

     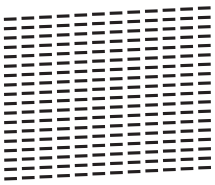

     Poor

     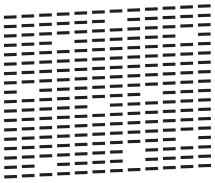
5. The touchscreen asks you to check the print quality of each colour. Press the number of the pattern (1–4) that most closely matches the printing result.
6. Do one of the following:
   - If print head cleaning is needed, press [Start] to start the cleaning procedure.
   - If print head cleaning is not needed, the Maintenance screen reappears on the touchscreen. Press .
7. After the cleaning procedure is finished, the touchscreen asks if you want to print the Print Quality Check Sheet again. Press [Yes], and then press [Start].

   The machine prints the Print Quality Check Sheet again. Check the quality of the four colour blocks on the sheet again.

If you clean the print head and the print has not improved, try installing a Brother Original replacement ink cartridge for each problem colour. Try cleaning the print head again. If the print has not improved, contact Brother customer service or your local Brother dealer.

IMPORTANT

DO NOT touch the print head. Touching the print head may cause permanent damage and may void the print head's warranty.

When a print head nozzle is clogged, the printed sample looks like this.

After the print head nozzle is cleaned, the lines are gone.

Related Information

- Check Your Brother Machine
- Paper Handling and Printing Problems

Check the Print Alignment from Your Brother Machine

If your printed text becomes blurred or images become faded after transporting the machine, adjust the print alignment.

>> DCP-J572DW/MFC-J491DW
>> DCP-J772DW/MFC-J690DW/MFC-J890DW

DCP-J572DW/MFC-J491DW

1. Press **Settings**.
2. Press ▲ or ▼ to select the following:
   a. Select `[General Setup]`. Press **OK**.
   b. Select `[Maintenance]`. Press **OK**.
   c. Select `[Impr. PrintQuality]`. Press **OK**.
   d. Select `[Alignment]`. Press **OK**.
3. Press ▶.
4. Press ▶ again.

   The machine starts printing the Alignment Check Sheet.

   (A)

   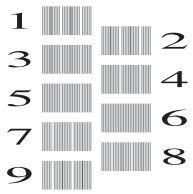

5. For pattern (A), press ◀ or ▶ to select the number of the test print that has the fewest visible vertical stripes (1-9), and then press **OK**.

   In the example above, row number 6 is the best choice.

   Repeat this step for the rest of the patterns.

When the print alignment is not adjusted correctly, text looks blurry or crooked, like this.

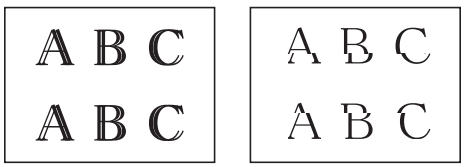

After the print alignment is adjusted correctly, text looks like this.

6. Press **Stop/Exit**.

DCP-J772DW/MFC-J690DW/MFC-J890DW

1. Press `[Ink]` > `[Improve Print Quality]` > `[Alignment]`.

You can also press [Settings] > [Maintenance] > [Improve Print Quality] > [Alignment].

2. Press [Next].
3. Press [Start].

   The machine prints the Alignment Check Sheet.

   (A)

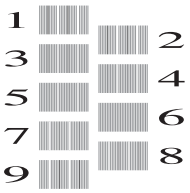

4. For the (A) pattern, press ▲ or ▼ to display the number of the test print with the fewest visible vertical stripes (1-9), and then press it (in the example above, row number 6 is the best choice). Press [OK].

   Repeat this step for the rest of the patterns.

When the print alignment is not adjusted correctly, text looks blurry or crooked, like this.

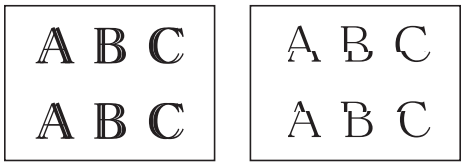

After the print alignment is adjusted correctly, text looks like this.

5. Press .

Related Information

- Check Your Brother Machine
- Paper Handling and Printing Problems

Check the Ink Volume

Although an ink volume icon appears on the machine's LCD, you can use the ink menu to see a large graph showing the ink left in each cartridge.

>> DCP-J572DW/MFC-J491DW
>> DCP-J772DW/MFC-J690DW/MFC-J890DW

DCP-J572DW/MFC-J491DW

1. Press **Settings**.
2. Press ▲ or ▼ to select the following:
   a. Select [General Setup]. Press **OK**.
   b. Select [Maintenance]. Press **OK**.
   c. Select [Ink Volume]. Press **OK**.
   The LCD displays the ink volume.

- When the ink cartridge is near the end of its life or having a problem, one of the following icons is displayed.

	The ink level is low.
	The ink cartridge is at the end of its life.
	There is a problem with the ink cartridge.

- To check or print the model numbers of the ink cartridges, press **Clear/Back** to go back to the [Maintenance] menu screen, and then select [Ink Cartridge Model].
  Press **OK** and follow the instruction on the LCD.

3. Press **Stop/Exit**.

You can also check the ink volume from your computer.

DCP-J772DW/MFC-J690DW/MFC-J890DW

1. Press [Ink] > [Ink Volume]. The touchscreen displays the ink volume.

- You can also press [Settings] > [Maintenance] > [Ink Volume].
- When the ink cartridge is near the end of its life or having a problem, one of the following icons is displayed.

	The ink level is low.
	The ink cartridge is at the end of its life.
	There is a problem with the ink cartridge.

- To check or print the model numbers of the ink cartridges, press (Back) to go back to the [Ink] menu screen.
  Press [Ink Cartridge Model], and follow the instruction on the touchscreen.

2. Press .

You can also check the ink volume from your computer.

Related Information

- Check Your Brother Machine
- Touchscreen LCD Overview
- Settings Screen Overview
- Print a Document (Windows)
- Print a Document (Mac)
- Monitor Machine Status from Your Computer (Windows)

Monitor Machine Status from Your Computer (Windows)

The Status Monitor utility is a configurable software tool for monitoring the status of one or more devices; it allows you to get immediate notification of errors.

- Do one of the following:
  - Double-click the icon in the task tray.
  - Windows 7

    Click **(Start)** > **All Programs** > **Brother** > **Brother Utilities**.

    Click the drop-down list and select your model name (if not already selected). Click **Tools** in the left navigation bar, and then click **Status Monitor**.
  - Windows 8 and Windows 10

    Click (**Brother Utilities**), and then click the drop-down list and select your model name (if not already selected). Click **Tools** in the left navigation bar, and then click **Status Monitor**.

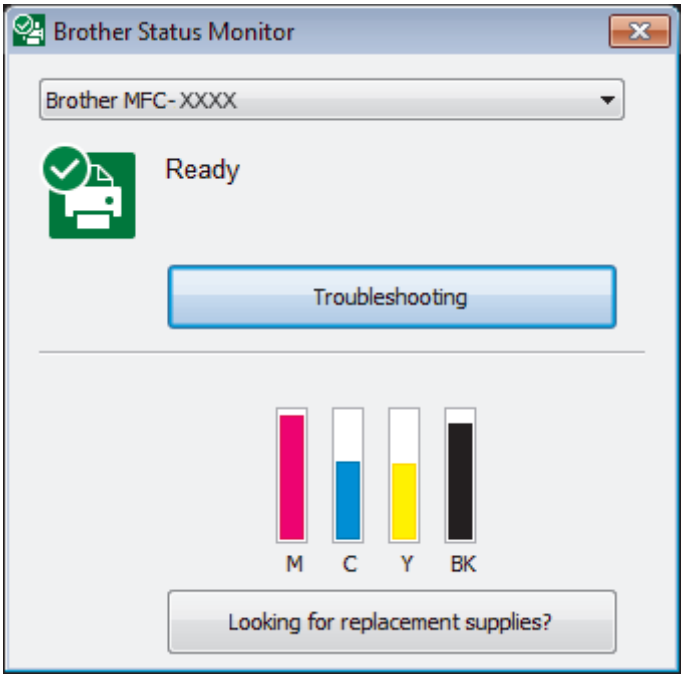

Troubleshooting

Click the **Troubleshooting** button to access the troubleshooting website.

Looking for replacement supplies?

Click the **Looking for replacement supplies?** button for more information on Brother original supplies.

Error icons

Icon	Description
	The ink level is low.
	The ink cartridge is at the end of its life.
	There is a problem with the ink cartridge.

Related Information

- Check Your Brother Machine

- Status Monitor Indicators and What They Mean (Windows)
- Turn Off the Show Status Monitor Feature (Windows)
- Turn Off the Status Monitor (Windows)
- Cancel a Print Job (Windows)
- Check the Ink Volume

Status Monitor Indicators and What They Mean (Windows)

When you start up your computer, the **Brother Status Monitor** icon appears on the task tray.

- A green icon indicates the normal stand-by condition.

- A yellow icon indicates a warning.

- A red icon indicates an error has occurred.

- A grey icon indicates the machine is offline.

Related Information

- Monitor Machine Status from Your Computer (Windows)

Turn Off the Show Status Monitor Feature (Windows)

The Show Status Monitor feature lets you know if there is a problem with a device that your computer is monitoring. The default setting is **Only when printing from this PC**. To turn it off, follow these steps:

1. Right-click the (**Brother Status Monitor**) icon or window, select the **Status Monitor Settings** option, and then click **Options**.

   The **Options** window appears.
2. Select the **Basic** tab, and then select **Off** for **Show Status Monitor**.
3. Click **OK**.

Even if the Show Status Monitor feature is turned off, you can check the machine's status at any time by displaying the Status Monitor.

Related Information

- Monitor Machine Status from Your Computer (Windows)

Turn Off the Status Monitor (Windows)

1. Right-click the (**Brother Status Monitor**) icon or window, and then select **Exit**.
2. Click **OK**.

Related Information

- Monitor Machine Status from Your Computer (Windows)

Monitor Machine Status from Your Computer (Mac)

Brother's Status Monitor utility program is a configurable software tool for monitoring the status of a device and notifying you immediately in the event of an error.

1. Select **System Preferences** from the Apple menu.
2. Select **Printers & Scanners**, and then select the machine.
3. Click the **Options & Supplies** button.
4. Click the **Utility** tab, and then click the **Open Printer Utility** button.

   The Status Monitor screen appears.

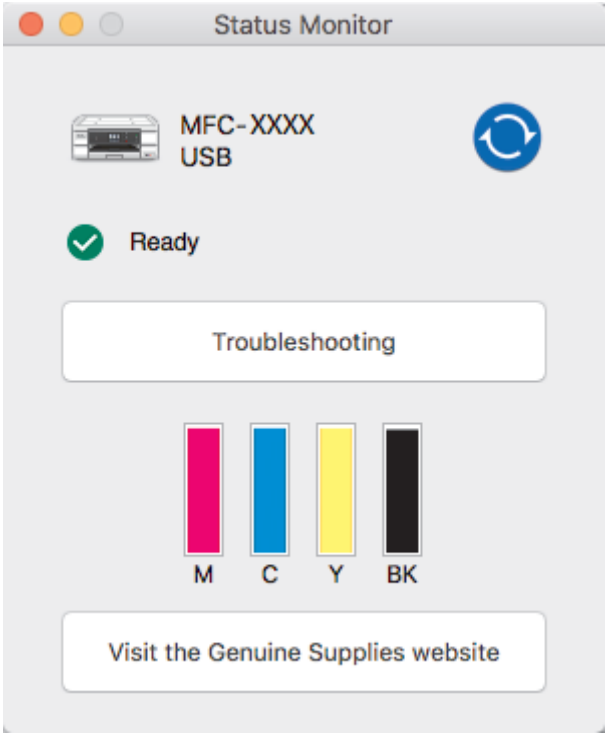

Troubleshooting

Click the **Troubleshooting** button to access the Brother Solutions Center, offering **FAQs & Troubleshooting** tips.

Visit the Genuine Supplies website

Click the **Visit the Genuine Supplies website** button for more information about Brother original supplies.

Updating the machine's status

To view the latest machine status while the **Status Monitor** window is open, click the icon. To set the interval at which the software updates the machine status information, click the **Brother Status Monitor** menu, and then select **Preferences**.

Error icons

Icon	Description
	The ink level is low.
	The ink cartridge is at the end of its life.
	There is a problem with the ink cartridge.

Related Information

- Check Your Brother Machine

Correct the Paper Feed to Clear Vertical Lines

Adjust the paper feed to reduce vertical lines.

>> DCP-J572DW/MFC-J491DW
>> DCP-J772DW/MFC-J690DW/MFC-J890DW

DCP-J572DW/MFC-J491DW

1. Press **Settings**.
2. Press ▲ or ▼ to select the following:
   a. Select `[General Setup]`. Press **OK**.
   b. Select `[Maintenance]`. Press **OK**.
   c. Select `[Impr. PrintQuality]`. Press **OK**.
   d. Select `[Correct Paper Feed]`. Press **OK**.
3. Press ▶, and then follow the instructions on the LCD.

DCP-J772DW/MFC-J690DW/MFC-J890DW

1. Press `[Ink]` > `[Improve Print Quality]` > `[Correct Paper Feed]`.

> You can also press `[Settings]` > `[Maintenance]` > `[Improve Print Quality]` > `[Correct Paper Feed]`.

2. Press the `[Next]` button, and then follow the instructions on the touchscreen.

Related Information

- Routine Maintenance
- Other Problems

Change the Print Setting Options When Having Printing Problems

If your print result is poor quality, select these options depending on your purpose. When these settings are selected, the printing speed is slower.

These options are available only when performing operations from the machine, such as copying. When printing from your computer, change the settings in the printer driver.

>> DCP-J572DW/MFC-J491DW
>> DCP-J772DW/MFC-J690DW/MFC-J890DW

DCP-J572DW/MFC-J491DW

1. Press **Settings**.
2. Press ▲ or ▼ to select the following:
   a. Select `[General Setup]`. Press **OK**.
   b. Select `[Maintenance]`. Press **OK**.
   c. Select `[Print Setting Options]`. Press **OK**.
3. Press ▲ or ▼ to select one of the following options:

Option	Description
`Reduce Smudging`	Select this option according to whether you are using 1-sided or 2-sided printing if you have problems with smudged printouts or paper jams.
`Slow Drying Paper`	Select this option if you use a type of plain paper on which ink dries slowly.

4. Press **OK**.
5. Press ▲ or ▼ to select the option you want. Press **OK**.
6. Press **Stop/Exit**.

DCP-J772DW/MFC-J690DW/MFC-J890DW

1. Press `[Settings]` > `[Maintenance]` > `[Print Setting Options]`.
2. Press one of the following options:

Option	Description
`Reduce Smudging`	Select this option according to whether you are using 1-sided or 2-sided printing if you have problems with smudged printouts or paper jams.
`Slow Drying Paper`	Select this option if you use a type of plain paper on which ink dries slowly.

3. Follow the LCD menus.
4. Press .

Related Information

- Routine Maintenance
- Copy on Both Sides of the Paper (2-sided Copy)
- Paper Handling and Printing Problems
- Prevent Smudged Printouts and Paper Jams (Windows)

- Prevent Smudged Printouts and Paper Jams (Mac)
- Print Settings (Windows)
- Print Options (Mac)

Pack and Ship Your Brother Machine

- When you transport the machine, use the packing materials that came with your machine. If you do not pack the machine correctly, any damage that may occur in transit may not be covered by your warranty.
- The machine should be adequately insured with the carrier.

IMPORTANT

It is important to allow the machine to “park” the print head after a print job. Listen carefully to the machine before unplugging it to make sure that all mechanical noises have stopped. Not allowing the machine to finish this parking process may lead to print problems and possible damage to the print head.

1. Unplug the machine from the electrical socket.
2. Unplug the machine from the telephone wall socket and take the telephone line cord out of the machine.
3. Using both hands, use the finger holds on each side of the machine to lift the scanner cover into the open position.
4. Unplug the interface cable from the machine, if it is connected.
5. Gently close the scanner cover using the finger holds on each side.

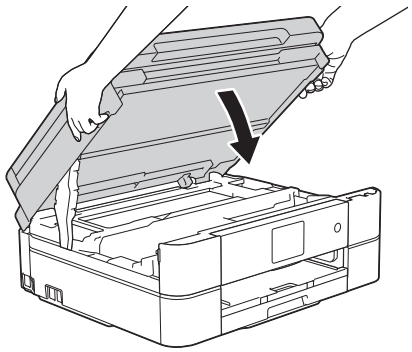

6. Open the ink cartridge cover.
7. Press the ink release levers to release the ink cartridges and then take out the ink cartridges.
8. Install the orange protective part and then close the ink cartridge cover.

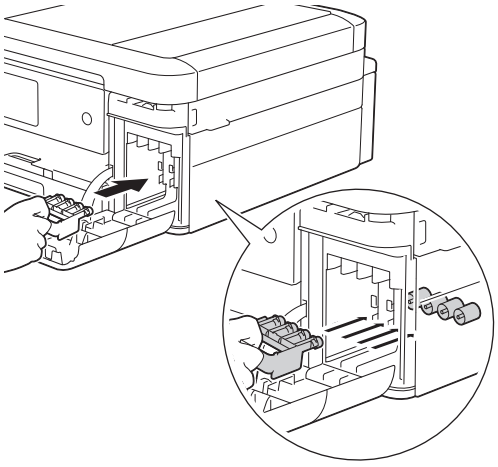

IMPORTANT

- Make sure the plastic tab on the left side of the orange protective part (1) locks securely into place (2).

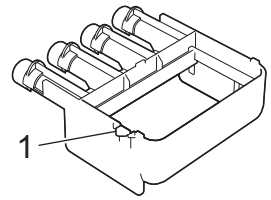

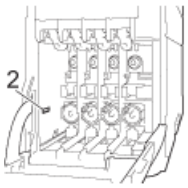

- If you are not able to find the orange protective part, ship the machine without it. DO NOT leave the ink cartridges in the machine during shipping.

9. Wrap the machine in the bag.

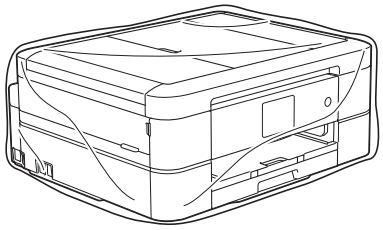

10. Pack the machine in the original carton with the original packing material as shown below.
    Do not pack the used ink cartridge in the carton.

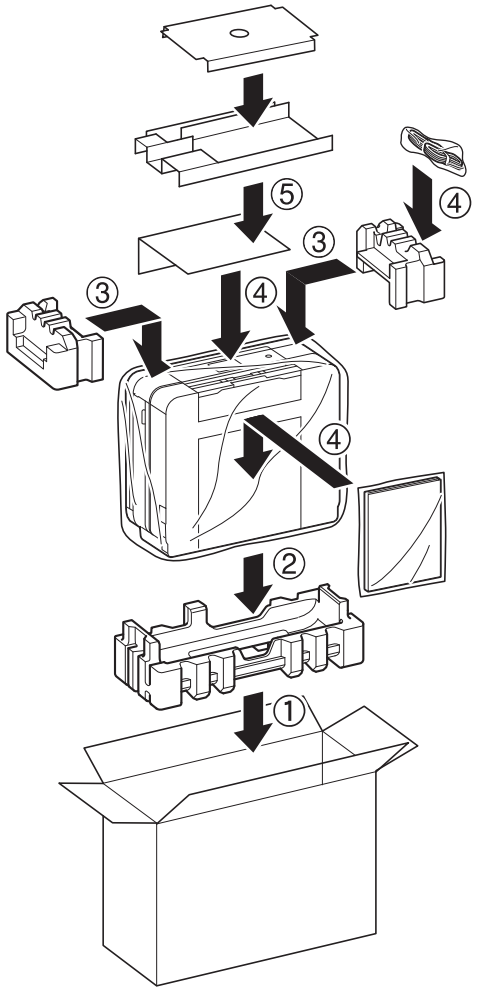

11. Close the carton and tape it shut.

Related Information

- Routine Maintenance
- Replace the Ink Cartridges

Machine Settings

Customise settings and features, create shortcuts, and work with options displayed on the machine's LCD to make your Brother machine a more efficient work tool.

- Change Machine Settings from the Control Panel
- Change Machine Settings from Your Computer

Change Machine Settings from the Control Panel

- In the Event of Power Failure (Memory Storage)
- General Settings
- Save Your Favourite Settings as a Shortcut
- Print Reports
- Settings and Features Tables

In the Event of Power Failure (Memory Storage)

DCP-J572DW/DCP-J772DW/MFC-J491DW/MFC-J690DW

- Your menu settings are stored permanently and will not be lost.
- Temporary settings (for example: Contrast and Overseas Mode) will be lost.
- The date and time must be re-entered.
- (MFC models) Programmed fax timer jobs and other fax jobs in the machine's memory will be lost.

MFC-J890DW

- Your menu settings are stored permanently and will not be lost.
- Temporary settings (for example: Contrast and Overseas Mode) will be lost.
- The date and time and programmed fax timer jobs (for example: Delayed Fax) will be retained for approximately 24 hours.
- Other fax jobs in the machine's memory will not be lost.

Related Information

- Change Machine Settings from the Control Panel

General Settings

- Adjust the Machine Volume
- Change for Daylight Saving Time Automatically
- Change for Daylight Saving Time Manually
- Set Sleep Mode Countdown
- Set the Machine to Power Off Automatically
- Set the Date and Time
- Adjust the LCD Backlight Brightness
- Change How Long the LCD Backlight Stays On
- Set Your Station ID
- Set Tone or Pulse Dialling Mode
- Reduce Printing Noise
- Change the Language Displayed on the LCD
- Change the Keyboard Setting

Adjust the Machine Volume

Related Models: DCP-J772DW/MFC-J491DW/MFC-J690DW/MFC-J890DW

>> MFC-J491DW
>> DCP-J772DW/MFC-J690DW/MFC-J890DW

MFC-J491DW

1. Press **Settings**.
2. Press ▲ or ▼ to select the following:
   a. Select [General Setup]. Press **OK**.
   b. Select [Volume]. Press **OK**.
3. Press ▲ or ▼ to select one of the following options:

Option	Description
Ring	Adjust the ring volume.
Beep	Adjust the volume when you press a button, make a mistake, or after you send or receive a fax.
Speaker	Adjust the speaker volume.

4. Press **OK**.
5. Press ▲ or ▼ to select the [Off], [Low], [Med], or [High] option. Press **OK**.
6. Press **Stop/Exit**.

DCP-J772DW/MFC-J690DW/MFC-J890DW

1. Do one of the following:
   - For MFC models:

     Press [Settings] > [All Settings] > [General Setup] > [Volume].
   - For DCP models:

     Press [Settings] > [All Settings] > [General Setup] > [Beep].
2. Press one of the following options (MFC models):

Option	Description
Ring	Adjust the ring volume.
Beep	Adjust the volume when you press a button, make a mistake, or after you send or receive a fax.
Speaker	Adjust the speaker volume.

3. Press ▲ or ▼ to display the [Off], [Low], [Med], or [High] option, and then press the option you want.
4. Press .

Related Information

- General Settings

Change for Daylight Saving Time Automatically

Related Models: MFC-J491DW/MFC-J690DW/MFC-J890DW

You can program the machine to change automatically for Daylight Saving Time.

It will reset itself forward one hour in the spring, and backward one hour in the autumn. Make sure you have set the correct date and time in the [Date & Time] setting.

This feature is available only in some countries.

>> MFC-J491DW
>> MFC-J690DW/MFC-J890DW

MFC-J491DW

1. Press **Settings**.
2. Press ▲ or ▼ to select the following:
   a. Select [Initial Setup]. Press **OK**.
   b. Select [Date & Time]. Press **OK**.
   c. Select [Auto Daylight]. Press **OK**.
   d. Select [On] or [Off]. Press **OK**.
3. Press **Stop/Exit**.

MFC-J690DW/MFC-J890DW

1. Press [Settings].
2. Press [Date & Time] > [Auto Daylight].
3. Press [On] or [Off].
4. Press .

Related Information

- General Settings

Change for Daylight Saving Time Manually

Related Models: MFC-J491DW/MFC-J690DW/MFC-J890DW

You can program the machine to change for Daylight Saving Time.

When selecting [Forward Hour] it will forward the time by an hour and backward one hour when selecting [Backward Hour]. Make sure you have set the correct date and time in the [Date & Time] setting.

This feature is available only in some countries.

>> MFC-J491DW
>> MFC-J690DW/MFC-J890DW

MFC-J491DW

1. Press **Settings**.
2. Press ▲ or ▼ to select the following:
   a. Select [Initial Setup]. Press **OK**.
   b. Select [Date & Time]. Press **OK**.
   c. Select [Daylight Save]. Press **OK**.
   d. Select [Forward Hour] or [Backward Hour]. Press **OK**.
3. Press **Stop/Exit**.

MFC-J690DW/MFC-J890DW

1. Press [Settings].
2. Press [Date & Time] > [Daylight Save].
3. Press [Forward Hour] or [Backward Hour].
4. Press .

Related Information

- General Settings

Set Sleep Mode Countdown

The Sleep Mode (or Power Save Mode) setting can reduce power consumption. When the machine is in Sleep Mode, it acts as though it is turned off. The machine will wake up and start printing when it receives a print job or a fax. Use these instructions to set a time delay (countdown) before the machine enters Sleep Mode.

- The timer will restart if any operation is carried out on the machine, such as receiving a fax or a print job.
- The factory setting is five minutes.
- When the machine goes into Sleep Mode, the LCD backlight turns off.

>> DCP-J572DW/MFC-J491DW
>> DCP-J772DW/MFC-J690DW/MFC-J890DW

DCP-J572DW/MFC-J491DW

1. Press **Settings**.
2. Press ▲ or ▼ to select the following:
   a. Select `[General Setup]`. Press **OK**.
   b. Select `[Sleep Mode]`. Press **OK**.
   c. Select `[1Min]`, `[2Mins]`, `[3Mins]`, `[5Mins]`, `[10Mins]`, `[30Mins]`, or `[60Mins]`. Press **OK**.
3. Press **Stop/Exit**.

DCP-J772DW/MFC-J690DW/MFC-J890DW

1. Press `[Settings]` > `[All Settings]` > `[General Setup]` > `[Sleep Mode]`.
2. Press ▲ or ▼ to display the `[1Min]`, `[2Mins]`, `[3Mins]`, `[5Mins]`, `[10Mins]`, `[30Mins]`, or `[60Mins]` option, and then press the option you want.
3. Press .

Related Information

- General Settings
- Set the Machine to Power Off Automatically

Set the Machine to Power Off Automatically

The Auto Power Off feature can save power consumption. Set the amount of time that the machine will be in Sleep Mode before it automatically powers off. When this feature is set to [Off], you must power off the machine manually.

To turn on the machine after the Auto Power Off feature has turned it Off, press .

The machine will not power off automatically when:

- Fax jobs are stored in the machine's memory. (MFC-J491DW/MFC-J690DW)
- An error prevents the Fax Journal report from printing. (MFC-J491DW/MFC-J690DW)
- The machine is connected to a telephone line. (MFC-J491DW/MFC-J690DW/MFC-J890DW)
- The machine is connected to a wired network. (MFC-J890DW)
- The machine is connected to a wireless network.
- [WLAN Enable] is set to [On] or [WLAN] is selected in the [Network I/F] setting.

>> DCP-J572DW/MFC-J491DW
>> DCP-J772DW/MFC-J690DW/MFC-J890DW

DCP-J572DW/MFC-J491DW

1. Press **Settings**.
2. Press ▲ or ▼ to select the following:
   a. Select [General Setup]. Press **OK**.
   b. Select [Auto Power Off]. Press **OK**.
   c. Select [Off], [1hour], [2hours], [4hours], or [8hours]. Press **OK**.
3. Press **Stop/Exit**.

DCP-J772DW/MFC-J690DW/MFC-J890DW

1. Press [Settings] > [All Settings] > [General Setup] > [Auto Power Off].
2. Press ▲ or ▼ to display the [Off], [1hour], [2hours], [4hours], or [8hours] option, and then press the option you want.
3. Press .

Related Information

- General Settings
- Set the Fax Journal's Interval Period
- Set Sleep Mode Countdown

Set the Date and Time

(MFC models)

The LCD displays the date and time. If they are not current, re-enter them. You can add the date and time to each fax you send by setting your Station ID.

(DCP models)

If the machine's power has been off, the machine's date and time may not be current. Re-enter them.

>> DCP-J572DW
>> MFC-J491DW
>> DCP-J772DW/MFC-J690DW/MFC-J890DW

DCP-J572DW

1. Press **Settings**.
2. Press ▲ or ▼ to select the following:
   a. Select `[Initial Setup]`. Press **OK**.
   b. Select `[Date & Time]`. Press **OK**.
   c. Select `[Date]`. Press **OK**.
3. Press ▲, ▼, ◀ or ▶ to select the following:
   a. To enter the last two digits of the year, select the numbers and then press **OK**. To save the year, select `[OK]` and then press **OK**.
   b. To enter the two digits for the month, select the numbers and then press **OK**. To save the month, select `[OK]` and then press **OK**.
   c. To enter the two digits for the day, select the numbers and then press **OK**. To save the day, select `[OK]` and then press **OK**.
4. Press ▲ or ▼ to select `[Clock Type]`, and then press **OK**.
5. Press ▲ or ▼ to select `[12h Clock]` or `[24h Clock]`, and then press **OK**.
6. Press ▲ or ▼ to select `[Time]`, and then press **OK**.
7. Press ▲, ▼, ◀ or ▶ to select the following:
   - If you selected `[12h Clock]`:

     To enter the four digits of the time (in 12-hour format), select the numbers and then press **OK**. Repeat these steps for setting the hour and minute. To save the time, select `[OK]` and then press **OK**.

     Select `[AM]` or `[PM]`, and then press **OK**.
   - If you selected `[24h Clock]`:

     To enter the four digits of the time (in 24-hour format), select the numbers and then press **OK**. Repeat these steps for setting the hour and minute. To save the time, select `[OK]` and then press **OK**.
8. Press **Stop/Exit**.

MFC-J491DW

1. Press **Settings**.
2. Press ▲ or ▼ to select the following:
   a. Select `[Initial Setup]`. Press **OK**.
   b. Select `[Date & Time]`. Press **OK**.
   c. Select `[Date]`. Press **OK**.
3. Enter the last two digits of the year using the dial pad, and then press **OK**.
4. Enter the two digits for the month using the dial pad, and then press **OK**.
5. Enter the two digits for the day using the dial pad, and then press **OK**.

6. Press ▲ or ▼ to select [Clock Type], and then press **OK**.
7. Press ▲ or ▼ to select [12h Clock] or [24h Clock], and then press **OK**.
8. Press ▲ or ▼ to select [Time], and then press **OK**.
9. To enter the time, do one of the following:
   - If you selected [12h Clock]:
     a. Enter the four digits of the time (in 12-hour format) using the dial pad.
     b. Press ▲, ▼, ◀ or ▶ to select [AM] or [PM] using the keyboard on the LCD, and then press **OK**.
     c. Press ▲, ▼, ◀ or ▶ to select [OK] using the keyboard on the LCD, and then press **OK**.
   - If you selected [24h Clock]:
     Enter the four digits of the time (in 24-hour format) using the dial pad, and then press **OK**.
10. Press **Stop/Exit**.

DCP-J772DW/MFC-J690DW/MFC-J890DW

1. Press [Settings].
2. Press [Date & Time].
3. Press [Date].
4. Enter the last two digits of the year on the touchscreen, and then press [OK].
5. Enter two digits for the month on the touchscreen, and then press [OK].
6. Enter two digits for the day on the touchscreen, and then press [OK].
7. Press [Clock Type].
8. Press [12h Clock] or [24h Clock].
9. Press [Time].
10. To enter the time, do one of the following:
    - If you selected [12h Clock], enter the time (in 12-hour format) using the touchscreen, and then press [AM] or [PM].
      Press [OK].
    - If you selected [24h Clock], enter the time (in 24-hour format) using the touchscreen.
      Press [OK].
      (For example, enter 19:45 for 7:45 PM.)
11. Press .

Related Information

- General Settings
- Register Your Machine with Google Cloud Print Using Web Based Management
- Set Your Station ID

Adjust the LCD Backlight Brightness

If you are having difficulty reading the LCD, changing the brightness setting may help.

>> DCP-J572DW/MFC-J491DW
>> DCP-J772DW/MFC-J690DW/MFC-J890DW

DCP-J572DW/MFC-J491DW

1. Press **Settings**.
2. Press ▲ or ▼ to select the following:
   a. Select [General Setup]. Press **OK**.
   b. Select [LCD Settings]. Press **OK**.
   c. Select [Backlight]. Press **OK**.
   d. Select [Light], [Med], or [Dark]. Press **OK**.
3. Press **Stop/Exit**.

DCP-J772DW/MFC-J690DW/MFC-J890DW

1. Press [Settings] > [All Settings] > [General Setup] > [LCD Settings] > [Backlight].
2. Press the [Light], [Med], or [Dark] option.
3. Press .

Related Information

- General Settings

Change How Long the LCD Backlight Stays On

Set how long the LCD backlight stays on.

>> DCP-J572DW/MFC-J491DW
>> DCP-J772DW/MFC-J690DW/MFC-J890DW

DCP-J572DW/MFC-J491DW

1. Press **Settings**.
2. Press ▲ or ▼ to select the following:
   a. Select [General Setup]. Press **OK**.
   b. Select [LCD Settings]. Press **OK**.
   c. Select [Dim Timer]. Press **OK**.
   d. Select [10Secs], [30Secs], [1Min], [2Mins], [3Mins], or [5Mins]. Press **OK**.
3. Press **Stop/Exit**.

DCP-J772DW/MFC-J690DW/MFC-J890DW

1. Press [Settings] > [All Settings] > [General Setup] > [LCD Settings] > [Dim Timer].
2. Press ▲ or ▼ to display the [10Secs], [30Secs], [1Min], [2Mins], [3Mins], or [5Mins] option, and then press the option you want.
3. Press .

Related Information

- General Settings

Set Your Station ID

Related Models: MFC-J491DW/MFC-J690DW/MFC-J890DW

Set the machine's Station ID if you want the date and time to appear on each fax you send.

>> MFC-J491DW
>> MFC-J690DW/MFC-J890DW

MFC-J491DW

1. Press **Settings**.
2. Press ▲ or ▼ to select the following:
   a. Select `[Initial Setup]`. Press **OK**.
   b. Select `[Station ID]`. Press **OK**.
3. Press ▲ or ▼ to select `[Fax]`, and then press **OK**.
4. Enter your fax number (up to 20 digits) using the dial pad, and then press **OK**.
5. Press ▲ or ▼ to select `[Name]`, and then press **OK**.
6. Enter your name (up to 20 characters) using the dial pad, and then press **OK**.

For more information about how to enter text, see the *Appendix*.

7. Press **Stop/Exit**.

MFC-J690DW/MFC-J890DW

1. Press `[Settings]` > `[All Settings]` > `[Initial Setup]` > `[Station ID]`.
2. Press `[Fax]`.
3. Enter your fax number (up to 20 digits) on the touchscreen, and then press `[OK]`.
4. Press `[Name]`.
5. Enter your name (up to 20 characters) using the touchscreen, and then press `[OK]`.

- Press to cycle between letters, numbers and special symbols. (The available characters may differ depending on your country.)
- If you entered an incorrect character and want to change it, press ◀ or ▶ to move the cursor to it. Press and then enter the correct character.
- To enter a space, press `[Space]`.

6. Press .

Related Information

- General Settings
- Transfer Faxes to Another Fax Machine
- Transfer the Fax Journal Report to Another Fax Machine
- Enter Text on Your Brother Machine
- Set the Date and Time

Set Tone or Pulse Dialling Mode

Related Models: MFC-J491DW/MFC-J690DW/MFC-J890DW

Your Brother machine is set for a Tone dialling service. If you have a Pulse dialling (rotary) service, you must change the dialling mode.

This feature is not available in some countries.

>> MFC-J491DW
>> MFC-J690DW/MFC-J890DW

MFC-J491DW

1. Press **Settings**.
2. Press ▲ or ▼ to select the following:
   a. Select `[Initial Setup]`. Press **OK**.
   b. Select `[Tone/Pulse]`. Press **OK**.
   c. Select `[Tone]` or `[Pulse]`. Press **OK**.
3. Press **Stop/Exit**.

MFC-J690DW/MFC-J890DW

1. Press `[Settings]` > `[All Settings]` > `[Initial Setup]` > `[Tone/Pulse]`.
2. Press `[Tone]` or `[Pulse]`.
3. Press .

Related Information

- General Settings
- Telephone and Fax Problems

Reduce Printing Noise

The Quiet Mode setting can reduce printing noise. When Quiet Mode is turned on, the print speed becomes slower.

The factory setting is [Off].

- When the Quiet Mode setting is turned on, appears on the Home screen.

>> DCP-J572DW/MFC-J491DW
>> DCP-J772DW/MFC-J690DW/MFC-J890DW

DCP-J572DW/MFC-J491DW

1. Press **Settings**.
2. Press ▲ or ▼ to select the following:
   a. Select [General Setup]. Press **OK**.
   b. Select [Quiet Mode]. Press **OK**.
   c. Select [On] or [Off]. Press **OK**.
3. Press **Stop/Exit**.

DCP-J772DW/MFC-J690DW/MFC-J890DW

1. Press [Settings] > [Quiet Mode].
2. Press [On] or [Off].
3. Press .

Related Information

- General Settings
- Touchscreen LCD Overview
- Paper Handling and Printing Problems

Change the Language Displayed on the LCD

Change the LCD language if needed.

This feature is not available in some countries.

>> DCP-J572DW/MFC-J491DW
>> DCP-J772DW/MFC-J690DW/MFC-J890DW

DCP-J572DW/MFC-J491DW

1. Press **Settings**.
2. Press ▲ or ▼ to select the following:
   a. Select `[Initial Setup]`. Press **OK**.
   b. Select `[Local Language]`. Press **OK**.
   c. Select your language. Press **OK**.
3. Press **Stop/Exit**.

DCP-J772DW/MFC-J690DW/MFC-J890DW

1. Press `[Settings]` > `[All Settings]` > `[Initial Setup]` > `[Local Language]`.
2. Press your language.
3. Press .

Related Information

- General Settings

Change the Keyboard Setting

Related Models: DCP-J772DW/MFC-J690DW/MFC-J890DW

You can choose the type of keyboard for the LCD.

1. Press [Settings] > [All Settings] > [General Setup] > [Keyboard Settings].
2. Press [QWERTY] or [ABC].
3. Press .

Related Information

- General Settings

Save Your Favourite Settings as a Shortcut

- Add Shortcuts
- Change or Delete Shortcuts

Add Shortcuts

Related Models: DCP-J772DW/MFC-J690DW/MFC-J890DW

You can add the Fax, Copy, Scan, Web Connect and Apps settings you use most frequently by saving them as your Shortcuts. Later you can press the Shortcut to apply these settings instead of manually re-entering them.

Some Shortcut menus are not available depending on your model.

These instructions describe how to add a Copy Shortcut. The steps for adding a Fax, Scan, Web Connect or Apps Shortcut are very similar.

1. Press [Shortcuts].
2. Press ◀ or ▶ to display the Shortcut screens.
3. Press + where you have not added a Shortcut.
4. Press ▲ or ▼ to display [Copy].
5. Press [Copy].
6. Press [Options].
7. Press ▲ or ▼ to display the available settings, and then press the setting you want to change.
8. Press ▲ or ▼ to display the available options for the setting, and then press the option you want.

   Repeat the previous and this steps until you have selected all the settings for this Shortcut. When finished, press [OK].
9. Press [Save as Shortcut].
10. Read and confirm the displayed list of settings you have selected, and then press [OK].
11. Enter a name for the Shortcut using the LCD, and then press [OK].

When adding Fax or Scan to Shortcuts, you will be asked if you want to make this a One Touch Shortcut. Follow the LCD instructions.

Related Information

- Save Your Favourite Settings as a Shortcut

Change or Delete Shortcuts

Related Models: DCP-J772DW/MFC-J690DW/MFC-J890DW

You can change the settings in a Shortcut.

You cannot change a Web Connect Shortcut or Apps Shortcut. If you need to change them, delete them, and then add a new Shortcut.

1. Press [Shortcuts].
2. Press ◀ or ▶ to display the Shortcut you want to change.
3. Press and hold the Shortcut you want to change.
4. Press [Edit].

To delete the Shortcut, press [Delete]. To edit the name of the Shortcut, press [Rename] and follow the LCD menus.

5. Change the settings for the Shortcut you selected.
6. Press [Save as Shortcut] when you have finished changing the settings.
7. Press [OK] to confirm.

When changing Fax or Scan Shortcuts, you will be asked if you want to make this a One Touch Shortcut. Follow the LCD instructions.

Related Information

- Save Your Favourite Settings as a Shortcut
- Enter Text on Your Brother Machine

Print Reports

- Reports
- Print a Report
- Fax Reports
- Telephone and Fax Problems

Reports

The following reports are available:

Transmission Verify (MFC models)

The Transmission Verify prints a Transmission Verification Report for your last transmission.

Address Book (MFC models)

Address Book report prints an alphabetical or numerical list of names and numbers stored in the Address Book memory.

Fax Journal (MFC models)

The Fax Journal prints a list of information about your last 200 incoming and outgoing faxes. (TX means Transmit, RX means Receive.)

User Settings

The User Settings report prints a list of your current settings.

Network Configuration (network models)

The Network Configuration report prints a list of your current network settings.

WLAN Report (wireless models)

The WLAN Report prints the wireless LAN connectivity diagnosis.

Caller ID history (MFC models)

The Caller ID history report prints a list of the available Caller ID information for the last 20 received faxes and telephone calls. (Not available for Taiwan and some countries)

Related Information

- Print Reports

Print a Report

>> DCP-J572DW/MFC-J491DW
>> DCP-J772DW/MFC-J690DW/MFC-J890DW

DCP-J572DW/MFC-J491DW

1. Press **Settings**.
2. Press ▲ or ▼ to select the following:
   a. Select `[Print Reports]`. Press **OK**.
   b. Select the report you want to print. Press **OK**.
3. Press ▶.
4. Press **Stop/Exit**.

DCP-J772DW/MFC-J690DW/MFC-J890DW

1. Press `[Settings]` > `[All Settings]` > `[Print Reports]`.
2. Press ▲ or ▼ to display the report options, and then press the option you want.
3. Press `[Yes]`.
4. Press .

Related Information

- Print Reports
- Caller ID

Settings and Features Tables

- Settings Tables (1.8"(44.9 mm) Colour LCD)
- Features Tables (1.8"(44.9 mm) Colour LCD)
- Settings Tables (2.7"(67.5 mm) touchscreen models)
- Features Tables (2.7"(67.5 mm) touchscreen models)

Settings Tables (1.8"(44.9 mm) Colour LCD)

Related Models: DCP-J572DW/MFC-J491DW

These tables will help you understand your machine's menu selections and options.

Settings > [General Setup]

Level 1	Level 2	Level 3	Descriptions
Maintenance	Impr. PrintQuality	-	Check and correct the print quality, alignment and paper feeding according to the LCD instructions.
	Print Head Cleaning	-	Clean the print head according to the LCD instructions.
	Ink Volume	-	Check the available ink volume.
	Ink Cartridge Model	-	Check your ink cartridge numbers.
	Print Setting Options	Reduce Smudging	Reduce smudging on the paper or paper jams during printing.
		Slow Drying Paper	Use this setting when printing with a type of plain paper on which the ink dries very slowly.
Paper Type	-	-	Set the type of paper in the paper tray.
Paper Size	-	-	Set the size of paper in the paper tray.
Check Paper	-	-	Check the paper type and paper size when you pull the tray out of the machine.
Quiet Mode	-	-	Decrease printing noise.
Volume (MFC-J491DW)	Ring	-	Adjust the ring volume.
	Beep	-	Adjust the beeper volume.
	Speaker	-	Adjust the speaker volume.
LCD Settings	Backlight	-	Adjust the brightness of the LCD backlight.
	Dim Timer	-	Set how long the LCD backlight stays on after you go back to your Home screen.
Sleep Mode	-	-	Select how long the machine must be idle before it goes into Sleep Mode.
Auto Power Off	-	-	Select how long the machine must wait before it automatically turns itself off after entering Sleep Mode. When set to Off, the machine will not power off automatically.
Removable Disc (DCP-J572DW)	-	-	Turn the Removable Disc function on or off.

Settings > [Fax] (MFC models)

Level 1	Level 2	Level 3	Descriptions
Setup Receive	Ring Delay	-	Set the number of rings before the machine answers in Fax Only or Fax/Tel mode.
	Receive Mode	-	Select the Receive Mode that best suits your needs.
	F/T Ring Time	-	Set the length of the pseudo/double-ring time in Fax/Tel mode.

Level 1	Level 2	Level 3	Descriptions
Setup Receive	Fax Detect	-	Receive fax messages automatically when you answer a call and hear fax tones.
	Remote Codes	-	Answer calls at an extension or external telephone and use codes to turn the Remote Codes on or off. You can personalise the codes.
	Auto Reduction	-	Reduce the size of incoming faxes.
	PC Fax Receive	-	Set the machine to send faxes to your computer. You can turn on the Backup Print safety feature.
	Fax Rx Stamp	-	Print the received time and date on the top of received faxes.
Report Setting	XMIT Report	-	Select the initial setup for the Transmission Verification Report.
	Journal Period	-	Set the interval for automatic printing of the Fax Journal. If you select an option other than Off and Every 50 Faxes, you can set the time for the option. If you select Every 7 Days, you can set the day of the week.
Print Document	-	-	Print received faxes stored in the machine's memory.
Remaining Jobs	-	-	Check which scheduled jobs are in the machine's memory and cancel selected jobs.
Miscellaneous	TX Lock	-	Prohibit most functions except receiving faxes.
	Distinctive (For some countries)	-	Use with telephone company distinctive ringing service allows you to have a voice number and fax number on the one phone line.
	FaxAbility (For New Zealand only)	-	If you have FaxAbility from Telecom, use this function to store the ringing pattern of your fax number. And if you set in to On, you should use the registered number only.
	Call Waiting (For New Zealand only)	-	If you have Call Waiting service, use this function to answer second call when you are on the phone and someone rings you.

Settings > [Network]

Level 1	Level 2	Level 3	Descriptions
WLAN	TCP/IP	BOOT Method	Select the BOOT method that best suits your needs.
		IP Address	Enter the IP address.
		Subnet Mask	Enter the Subnet mask.
		Gateway	Enter the Gateway address.
		Node Name	Enter the Node name.
		WINS Configuration	Select the WINS configuration mode.
		WINS Server	Specify the IP address of the primary or secondary WINS server.
		DNS Server	Specify the IP address of the primary or secondary DNS server.
		APIPA	Set the machine to allocate the IP address from the link-local address range automatically.
		IPv6	Turn the IPv6 protocol on or off. For more information, go to the Brother Solutions Center at support.brother.com to see **FAQs & Troubleshooting**.

Level 1	Level 2	Level 3	Descriptions
WLAN	Setup Wizard	-	Configure your wireless network settings manually.
	WLAN Assistant	-	Configure your wireless network settings using the Brother installation disc.
	WPS	-	Configure your wireless network settings using the one-button push method.
	WPS w/ PIN Code	-	Configure your wireless network settings using WPS with a PIN.
	WLAN Status	Status	View the current wireless network status.
		Signal	View the current wireless network signal strength.
		SSID	View the current SSID.
		Comm. Mode	View the current Communication mode.
	MAC Address	-	View the machine's MAC address.
Wi-Fi Direct	Push Button	-	Configure your Wi-Fi Direct network settings using the one-button push method.
	PIN Code	-	Configure your Wi-Fi Direct network settings using WPS with a PIN code.
	Manual	-	Configure your Wi-Fi Direct network settings manually.
	Group Owner	-	Set your machine as the Group Owner.
	Device Information	Device Name	View your machine's device name.
		SSID	View the Group Owner's SSID. When the machine is not connected, the LCD displays Not Connected.
		IP Address	View your machine's current IP Address.
	Status Information	Status	View the current Wi-Fi Direct network status.
		Signal	View the current Wi-Fi Direct network signal strength. When your machine acts as Group Owner, the LCD always indicates a strong signal.
	I/F Enable	-	Turn the Wi-Fi Direct connection on or off.
Web Connect Settings	Proxy Settings	Proxy Connection	Change the Web connection settings.
		Address	
		Port	
		User Name	
		Password	
WLAN Enable	-	-	Turn wireless network connection On or Off.
Network Reset	-	-	Restore all network settings back to the factory settings.

Settings > [Print Reports]

Level 1	Descriptions
XMIT Verify (MFC-J491DW)	Print a Transmission Verification Report for your last transmission.
Address Book (MFC-J491DW)	Print a list of names and numbers stored in the Address Book.

Level 1	Descriptions
Fax Journal (MFC-J491DW)	Print a list of information about your last 200 incoming and outgoing faxes. (TX means Transmit. RX means Receive.)
User Settings	Print a list of your settings.
Network Config	Print a list of your Network settings.
WLAN Report	Print the wireless LAN connection results.
Caller ID History (MFC-J491DW) (Not available for Taiwan and some countries)	Print a list of the available Caller ID information about the last 20 received faxes and telephone calls.

Settings > [Machine Info.]

Level 1	Descriptions
Serial No.	Check your machine's serial number.
Firmware Version	Check your machine's firmware version.
Firmware Update	Update your machine to the latest firmware.
Firmware Auto Check	View firmware information on the Home screen.

Settings > [Initial Setup]

Level 1	Level 2	Descriptions
Date & Time	**Date**	(MFC-J491DW) Add the date and time on the screen and in the headings of the faxes you send. (DCP-J572DW) Set the date and time on your machine.
	Time	
	Clock Type	Select the time format (12-hour or 24-hour).
	Auto Daylight (MFC-J491DW) (Available only for some countries.)	Set the machine to change automatically for Daylight Saving Time.
	Daylight Save (MFC-J491DW) (Available only for some countries.)	Change for Daylight Saving Time manually.
Station ID (MFC-J491DW)	-	Enter your name and fax number so it appears on each page you fax.
Tone/Pulse (MFC-J491DW) (Available only for some countries.)	-	Select the dialling mode.
Fax Auto Redial (MFC-J491DW)	-	Set the machine to redial the last fax number if the fax did not go through because the line was busy.
Dial Tone (MFC-J491DW)	-	Shorten the dial tone detect pause.
Phone Line Set (MFC-J491DW) (Available only for some countries.)	-	Select the telephone line type.
Compatibility	-	Adjust the equalisation for transmission difficulties.

Level 1	Level 2	Descriptions
(MFC-J491DW)		VoIP service providers offer fax support using various standards. If you regularly experience fax transmission errors, select Basic (for VoIP).
Reset	**Machine Reset**	Restore all the machine's settings that you have changed, such as Date and Time and Ring Delay.
	Network	Restore all network settings back to the factory settings.
	Address Book & Fax (MFC-J491DW)	Erase all stored phone numbers and fax settings.
	All Settings	Restore all the machine's settings back to the factory settings.
Local Language (Available only for some countries.)	-	Change your LCD language.

Related Information

- Settings and Features Tables

Features Tables (1.8"(44.9 mm) Colour LCD)

Related Models: DCP-J572DW/MFC-J491DW

FAX (MFC models)

Level 1	Level 2	Descriptions
Fax Resolution	-	Set the resolution for outgoing faxes.
Contrast	-	Adjust the contrast.
Glass Scan Size	-	Adjust the scan area of the scanner glass to the size of the document.
Broadcasting	-	Send the same fax message to more than one fax number.
Real Time TX	-	Send a fax without using the memory.
Overseas Mode	-	Set to On if you have difficulty sending faxes overseas.
Call History	Redial	Send a fax to the last number you called.
	Outgoing Call	Select a number from the Outgoing Call history and then send a fax to it, add it to the Address Book, or delete it.
	Caller ID History (Not available for Taiwan and some countries)	Select a number from the Caller ID History and then send a fax to it, add it to the Address Book, or delete it.
Address Book	Search	Dial by pressing only a few buttons.
	Set Speed Dial	Store Speed Dial numbers, so you can dial by pressing only a few buttons.
	Setup Groups	Set up Group numbers for broadcasting.
	Change	Change Address Book numbers.
	Delete	Delete Address Book numbers.
Set New Default	-	Save your settings as the default.
Factory Reset	-	Restore all settings back to the factory settings.

SCAN

Level 1	Level 2	Descriptions
to Media (DCP-J572DW) (When a media is inserted)	-	Scan documents and save them directly to a media without using a computer.
to PC	to File	Scan documents and save them to a folder on your computer.
	to OCR (MFC-J491DW)	Convert your scanned document to an editable text file.
	to Image	Scan photos or graphics into your graphics applications.
	to E-mail	Send a scanned document as an email attachment.
to Web	-	Upload the scanned data to an Internet service.

Level 1	Level 2	Descriptions
WS Scan (Appears when you install a Web Services Scanner, which is displayed in your computer's Network explorer.)	Scan	Scan data using the Web Service protocol.
	Scan for E-mail	
	Scan for Fax	
	Scan for Print	

COPY (MFC models) / COPY (Default screen) (DCP models)

Level 1	Level 2	Descriptions
Quality	-	Select the Copy resolution for your document type.
Paper Type	-	Select the paper type that matches the paper in the tray.
Paper Size	-	Select the paper size that matches the paper in the tray.
Enlarge/Reduce	100%	-
	Enlarge	Select an enlargement ratio for the next copy.
	Reduce	Select a reduction ratio for the next copy.
	Fit to Page	Adjust the copy size to fit on the paper size you have set.
	Custom(25-400%)	Enter an enlargement or reduction ratio.
Density	-	Adjust the density.
Stack/Sort	-	Select to stack or sort multiple copies.
Page Layout	-	Make N in 1, 2 in 1 ID, or Poster copies.
2-sided Copy	-	Turn off or turn on 2-sided copying and select flip on long edge or flip on short edge.
Remove Background	Black Copy Settings	Change the amount of background colour that is removed.
	Colour Copy Settings	
Set New Default	-	Save your settings as the default.
Factory Reset	-	Restore all settings back to the factory settings.

PHOTO (DCP-J572DW)

Level 1	Level 2	Level 3	Level 4	Descriptions
JPEG Print	Select Files	OK	Print Settings	Adjust your photos with the options.
	Index Print	Print Index Sheet	Print Settings	Print a thumbnail page.
		Print Photos	Print Settings	Print photos by choosing the index numbers.
	Print All	Print Settings	-	Print all photos in your memory card or USB flash drive.

WEB

Level 1	Descriptions
Web	Connect the Brother machine to an Internet service.

[Address Book] (MFC models)

Level 1	Descriptions
Search	Dial by pressing only a few buttons.
Set Speed Dial	Store Speed Dial numbers, so you can dial by pressing only a few buttons.
Setup Groups	Set up Group numbers for broadcasting.
Change	Change Address Book numbers.
Delete	Delete Address Book numbers.

Redial/Pause (MFC models)

Level 1	Descriptions
Redial	Send a fax to the last number you called.
Outgoing Call	Select a number from the Outgoing Call history and then send a fax to it, add it to the Address Book, or delete it.
Caller ID History (Not available for Taiwan and some countries)	Select a number from the Caller ID History and then send a fax to it, add it to the Address Book, or delete it.

WiFi

You can configure the wireless settings by pressing WiFi or **WiFi** on the control panel.

Level 1	Descriptions
Setup Wizard	Configure your wireless network settings manually.
WLAN Assistant	Configure your wireless network settings using the Brother installation disc.
WPS	Configure your wireless network settings using the one-button push method.

Related Information

- Settings and Features Tables

Settings Tables (2.7"(67.5 mm) touchscreen models)

Related Models: DCP-J772DW/MFC-J690DW/MFC-J890DW

These tables will help you understand your machine's menu selections and options.

[Settings]

[Settings]

Level 1	Level 2	Level 3	Descriptions
(Date & Time)	Date	-	(MFC models) Add the date and time on the screen and in the headings of the faxes you send. (DCP models) Set the date and time on your machine.
	Time	-	
	Clock Type	-	Select the time format (12-hour or 24-hour).
	Auto Daylight (MFC models) (Available only for some countries.)	-	Set the machine to change automatically for Daylight Saving Time.
	Daylight Save (Available only for some countries.) (MFC models)	-	Change for Daylight Saving Time manually.
Maintenance	Improve Print Quality	-	Check and correct the print quality, alignment and paper feeding according to the LCD instructions.
	Print Head Cleaning	-	Clean the print head according to the LCD instructions.
	Ink Volume	-	Check the available ink volume.
	Ink Cartridge Model	-	Check your ink cartridge numbers.
	Print Setting Options	Reduce Smudging	Reduce smudging on the paper or paper jams during printing.
		Slow Drying Paper	Use this setting when printing with a type of plain paper on which the ink dries very slowly.
Wi-Fi	TCP/IP	-	Set TCP/IP protocol.
	Setup Wizard	-	Configure your wireless network settings manually.
	WLAN Assistant	-	Configure your wireless network settings using the Brother installation disc.
	WPS	-	Configure your wireless network settings using the one-button push method.
	WPS w/ PIN Code	-	Configure your wireless network settings using WPS with a PIN.
	WLAN Status	-	View the current wireless network status.
	MAC Address	-	View the machine's MAC address.

Level 1	Level 2	Level 3	Descriptions
Quiet Mode	-	-	Decrease printing noise.
Tray Setting (MFC-J890DW)	Paper Type	-	Set the type of paper in the paper tray.
	Paper Size (MFC-J890DW)	-	Set the size of paper in the paper tray.
Paper Type (DCP-J772DW/ MFC-J690DW)	-	-	Set the type of paper in paper tray #1.
Paper Size (DCP-J772DW/ MFC-J690DW)	-	-	Set the size of paper in paper tray #1.
Fax Preview (MFC-J890DW)	-	-	View received faxes on the LCD.
All Settings	-	-	Configure the detailed settings.

[General Setup]

[Settings] > [All Settings] > [General Setup]

Level 1	Level 2	Level 3	Descriptions
Maintenance	Improve Print Quality	-	Check and correct the print quality, alignment and paper feeding according to the LCD instructions.
	Print Head Cleaning	-	Clean the print head according to the LCD instructions.
	Ink Volume	-	Check the available ink volume.
	Ink Cartridge Model	-	Check your ink cartridge numbers.
	Print Setting Options	Reduce Smudging	Reduce smudging on the paper or paper jams during printing.
		Slow Drying Paper	Use this setting when printing with a type of plain paper on which the ink dries very slowly.
Paper Type	-	-	Set the type of paper in the paper tray.
Paper Size	-	-	Set the size of paper in the paper tray.
Check Paper	-	-	Check the paper type and paper size when you pull the tray out of the machine.
Quiet Mode	-	-	Decrease printing noise.
Beep (DCP models)	-	-	Adjust the beeper volume.
Volume (MFC models)	Ring	-	Adjust the ring volume.
	Beep	-	Adjust the beeper volume.
	Speaker	-	Adjust the speaker volume.
LCD Settings	Backlight	-	Adjust the brightness of the LCD backlight.
	Dim Timer	-	Set how long the LCD backlight stays on after the last finger press.
Screen Settings	Scan Screen	-	Set the default Scan screen settings.
Keyboard Settings	-	-	Select the type of keyboard for the LCD.
Sleep Mode	-	-	Select how long the machine must be idle before it goes into Sleep Mode.

Level 1	Level 2	Level 3	Descriptions
Auto Power Off	-	-	Select how long the machine must wait before it automatically turns itself off after entering Sleep Mode. When set to Off, the machine will not power off automatically.
Removable Disc	-	-	Turn the Removable Disc function on or off.

[Shortcut Settings]

[Settings] > [All Settings] > [Shortcut Settings]

Level 1	Level 2	Descriptions
(Select shortcut button.)	Rename	Change the shortcut name.
	Edit	Change the shortcut settings.
	Delete	Delete the shortcut.

[Fax]

[Settings] > [All Settings] > [Fax] (MFC models)

Level 1	Level 2	Level 3	Descriptions
Setup Receive	Ring Delay	-	Set the number of rings before the machine answers in Fax Only or Fax/Tel mode.
	Receive Mode	-	Select the Receive Mode that best suits your needs.
	F/T Ring Time	-	Set the length of the pseudo/double-ring time in Fax/Tel mode.
	Fax Preview (MFC-J890DW)	-	View received faxes on the LCD.
	Fax Detect	-	Receive fax messages automatically when you answer a call and hear fax tones.
	Remote Codes	-	Answer calls at an extension or external telephone and use codes to turn the Remote Codes on or off. You can personalise the codes.
	Auto Reduction	-	Reduce the size of incoming faxes.
	PC Fax Receive	-	Set the machine to send faxes to your computer. You can turn on the Backup Print safety feature.
	Memory Receive	-	Set the machine to forward fax messages, to store incoming faxes in the memory (so you can retrieve them while you are away from your machine), or the cloud service. If you select Fax Forward, or Forward to Cloud, you can turn on the Backup Print safety feature.
	Fax Rx Stamp	-	Print the received time and date on the top of received faxes.
Report Setting	XMIT Report	-	Select the initial setup for the Transmission Verification Report.
	Journal Period	-	Set the interval for automatic printing of the Fax Journal. If you select an option other than Off and Every 50 Faxes, you can set the time for the option. If you select Every 7 Days, you can set the day of the week.
Print Document	-	-	Print received faxes stored in the machine's memory.
Remote Access	-	-	Set your own code for Remote Retrieval.

Level 1	Level 2	Level 3	Descriptions
Remaining Jobs	-	-	Check which scheduled jobs are in the machine's memory and cancel selected jobs.
Miscellaneous	Memory Security (MFC-J890DW)	-	Prohibit most functions except receiving faxes into memory.
	TX Lock (MFC-J690DW)	-	Prohibit most functions except receiving faxes.
	Distinctive (For some countries)	-	Use with telephone company distinctive ringing service allows you to have a voice number and fax number on the one phone line.
	FaxAbility (For New Zealand only)	-	If you have FaxAbility from Telecom, use this function to store the ringing pattern of your fax number. And if you set in to On, you should use the registered number only.
	Call Waiting (For New Zealand only)	-	If you have Call Waiting service, use this function to answer second call when you are on the phone and someone rings you.

[Network]

[Settings] > [All Settings] > [Network]

Level 1	Level 2	Level 3	Level 4	Descriptions
Wired LAN (MFC-J890DW)	TCP/IP	BOOT Method	-	Select the BOOT method that best suits your needs.
		IP Address	-	Enter the IP address.
		Subnet Mask	-	Enter the Subnet mask.
		Gateway	-	Enter the Gateway address.
		Node Name	-	Enter the Node name.
		WINS Configuration	-	Select the WINS configuration mode.
		WINS Server	-	Specify the IP address of the primary or secondary WINS server.
		DNS Server	-	Specify the IP address of the primary or secondary DNS server.
		APIPA	-	Set the machine to allocate the IP address from the link-local address range automatically.
		IPv6	-	Turn the IPv6 protocol on or off. For more information, go to the Brother Solutions Center at support.brother.com to see **FAQs & Troubleshooting**.
	Ethernet	-	-	Select the Ethernet link mode.
	Wired Status	-	-	View the current wired status.
	MAC Address	-	-	View the machine's MAC address.
WLAN	TCP/IP	BOOT Method	-	Select the BOOT method that best suits your needs.
		IP Address	-	Enter the IP address.
		Subnet Mask	-	Enter the Subnet mask.
		Gateway	-	Enter the Gateway address.

Level 1	Level 2	Level 3	Level 4	Descriptions
WLAN	TCP/IP	Node Name	-	Enter the Node name.
		WINS Configuration	-	Select the WINS configuration mode.
		WINS Server	-	Specify the IP address of the primary or secondary WINS server.
		DNS Server	-	Specify the IP address of the primary or secondary DNS server.
		APIPA	-	Set the machine to allocate the IP address from the link-local address range automatically.
		IPv6	-	Turn the IPv6 protocol on or off. For more information, go to the Brother Solutions Center at support.brother.com to see **FAQs & Troubleshooting**.
	Setup Wizard	-	-	Configure your wireless network settings manually.
	WLAN Assistant	-	-	Configure your wireless network settings using the Brother installation disc.
	WPS	-	-	Configure your wireless network settings using the one-button push method.
	WPS w/ PIN Code	-	-	Configure your wireless network settings using WPS with a PIN.
	WLAN Status	Status	-	View the current wireless network status.
		Signal	-	View the current wireless network signal strength.
		SSID	-	View the current SSID.
		Comm. Mode	-	View the current Communication mode.
	MAC Address	-	-	View the machine's MAC address.
Wi-Fi Direct	Push Button	-	-	Configure your Wi-Fi Direct network settings using the one-button push method.
	PIN Code	-	-	Configure your Wi-Fi Direct network settings using WPS with a PIN code.
	Manual	-	-	Configure your Wi-Fi Direct network settings manually.
	Group Owner	-	-	Set your machine as the Group Owner.
	Device Information	Device Name	-	View your machine's device name.
		SSID	-	View the Group Owner's SSID. When the machine is not connected, the LCD displays Not Connected.
		IP Address	-	View your machine's current IP Address.
	Status Information	Status	-	View the current Wi-Fi Direct network status.
		Signal	-	View the current Wi-Fi Direct network signal strength. When your machine acts as Group Owner, the LCD always indicates a strong signal.
	I/F Enable	-	-	Turn the Wi-Fi Direct connection on or off.

Level 1	Level 2	Level 3	Level 4	Descriptions
NFC (MFC-J890DW)	-	-	-	Turn the NFC function on or off.
Message from Brother	**Message from Brother**	-	-	Display messages and notifications from Brother.
	Status	-	-	
Web Connect Settings	**Proxy Settings**	**Proxy Connection**	-	Change the Web connection settings.
		Address	-	
		Port	-	
		User Name	-	
		Password	-	
Network I/F (MFC-J890DW)	-	-	-	Select the network connection type.
WLAN Enable (DCP-J772DW/ MFC-J690DW)	-	-	-	Turn wireless network connection On or Off.
Network Reset	-	-	-	Restore all network settings back to the factory settings.

[Print Reports]

[Settings] > [All Settings] > [Print Reports]

Level 1	Descriptions
XMIT Verify (MFC models)	Print a Transmission Verification Report for your last transmission.
Address Book (MFC models)	Print a list of names and numbers stored in the Address Book.
Fax Journal (MFC models)	Print a list of information about your last 200 incoming and outgoing faxes. (TX means Transmit. RX means Receive.)
User Settings	Print a list of your settings.
Network Configuration	Print a list of your Network settings.
WLAN Report	Print the wireless LAN connection results.
Caller ID History (MFC models) (Not available for Taiwan and some countries)	Print a list of the available Caller ID information about the last 30 received faxes and telephone calls.

[Machine Info.]

[Settings] > [All Settings] > [Machine Info.]

Level 1	Level 2	Descriptions
Serial No.	-	Check your machine's serial number.
Firmware Version	**Main Version**	Check your machine's firmware version.
Firmware Update	-	Update your machine to the latest firmware.
Firmware Auto Check	-	View firmware information on the Home screen.

[Initial Setup]

[Settings] > [All Settings] > [Initial Setup]

Level 1	Level 2	Descriptions
Date & Time	**Date**	(MFC models) Add the date and time on the screen and in the headings of the faxes you send. (DCP models) Set the date and time on your machine.
	Time	
	Clock Type	Select the time format (12-hour or 24-hour).
	Auto Daylight (MFC models) (Available only for some countries.)	Set the machine to change automatically for Daylight Saving Time.
	Daylight Save (MFC models) (Available only for some countries.)	Change for Daylight Saving Time manually.
Station ID (MFC models)	**Fax**	Enter your name and fax number so it appears on each page you fax.
	Name	
Tone/Pulse (MFC models) (Available only for some countries.)	-	Select the dialling mode.
Fax Auto Redial (MFC models)	-	Set the machine to redial the last fax number if the fax did not go through because the line was busy.
Dial Tone (MFC models)	-	Shorten the dial tone detect pause.
Phone Line Set (MFC models) (Available only for some countries.)	-	Select the telephone line type.
Compatibility (MFC models)	-	Adjust the equalisation for transmission difficulties. VoIP service providers offer fax support using various standards. If you regularly experience fax transmission errors, select Basic (for VoIP).
Reset	**Machine Reset**	Restore all the machine's settings that you have changed, such as Date and Time and Ring Delay.
	Network	Restore all network settings back to the factory settings.
	Address Book & Fax (MFC models)	Erase all stored phone numbers and fax settings.
	All Settings	Restore all the machine's settings back to the factory settings.
Local Language (Available only for some countries.)	-	Change your LCD language.

Related Information

- Settings and Features Tables

Features Tables (2.7"(67.5 mm) touchscreen models)

Related Models: DCP-J772DW/MFC-J690DW/MFC-J890DW

[Fax] (When [Fax Preview] is [Off]) (MFC models)

Level 1	Level 2	Level 3	Descriptions
Pause	-	-	When you are entering a fax or telephone number on the control panel, Pause appears on the LCD. Press Pause when you need a delay while dialling numbers, such as access codes and credit card numbers. You can also store a pause when you set up addresses.
Address Book	(Search:)	-	Search within the Address Book.
	Edit	-	Store Address Book numbers, set up Group numbers for Broadcasting, and change and delete Address Book numbers.
	-	Apply	Start sending a fax using the Address Book.
Call History	Redial	-	Redial the last number you dialled.
	Outgoing Call	Apply	Select a number from the Outgoing Call history and then send a fax to it, add it to the Address Book, or delete it.
		Edit	
	Caller ID History (Not available for Taiwan and some countries)	Apply	Select a number from the Caller ID History and then send a fax to it, add it to the Address Book, or delete it.
		Edit	
Options	Fax Resolution	-	Set the resolution for outgoing faxes.
	Contrast	-	Adjust the contrast.
	Glass Scan Size	-	Adjust the scan area of the scanner glass to the size of the document.
	Broadcasting	Add Number	Send the same fax message to more than one fax number.
	Preview (MFC-J890DW)	-	Preview a fax message before you send it.
	Colour Setting	-	Set whether faxes are sent in monochrome or colour.
	Delayed Fax	Delayed Fax	Set the time of day the delayed faxes will be sent.
		Set Time	
	Batch TX	-	Combine delayed faxes to the same fax number at the same time of day into one transmission.
	Real Time TX	-	Send a fax without using the memory.
	Overseas Mode	-	Set to On if you have difficulty sending faxes overseas.
	Call History	Redial	Redial the last number you dialled.
		Outgoing Call	Select a number from the Outgoing Call history and then send a fax to it, add it to the Address Book, or delete it.
		Caller ID History	Select a number from the Caller ID History and then send a fax to it, add it to the Address Book, or delete it.

Level 1	Level 2	Level 3	Descriptions
Options	Call History	(Not available for Taiwan and some countries)	
	Address Book	(Search:)	Search within the Address Book.
		Edit	Store Address Book numbers, set up Group numbers for Broadcasting, and change and delete Address Book numbers.
	Set New Default	-	Save your settings as the default.
	Factory Reset	-	Restore all settings back to the factory settings.
Save as Shortcut	-	-	Save the current settings as a shortcut.

[Fax] (When [Fax Preview] is [On])

Level 1	Level 2	Level 3	Level 4	Descriptions
Sending Faxes	Pause	-	-	When you are entering a fax or telephone number on the control panel, Pause appears on the LCD. Press Pause when you need a delay while dialling numbers, such as access codes and credit card numbers. You can also store a pause when you set up addresses.
	Address Book	(Search:)	-	Search within the Address Book.
		Edit	-	Store Address Book numbers, set up Group numbers for Broadcasting, and change and delete Address Book numbers.
		-	Apply	Start sending a fax using the Address Book.
	Call History	Redial	-	Redial the last number you dialled.
		Outgoing Call	Apply	Select a number from the Outgoing Call history and then send a fax to it, add it to the Address Book, or delete it.
			Edit	
		Caller ID History (Not available for Taiwan and some countries)	Apply	Select a number from the Caller ID History and then send a fax to it, add it to the Address Book, or delete it.
			Edit	
	Options	Fax Resolution	-	Set the resolution for outgoing faxes.
		Contrast	-	Adjust the contrast.
		Glass Scan Size	-	Adjust the scan area of the scanner glass to the size of the document.
		Broadcasting	Add Number	Send the same fax message to more than one fax number.
		Preview	-	Preview a fax message before you send it.
		Colour Setting	-	Set whether faxes are sent in monochrome or colour.
		Delayed Fax	Delayed Fax	Set the time of day the delayed faxes will be sent.

Level 1	Level 2	Level 3	Level 4	Descriptions
Sending Faxes	Options	Delayed Fax	Set Time	Set the time of day the delayed faxes will be sent.
		Batch TX	-	Combine delayed faxes to the same fax number at the same time of day into one transmission.
		Real Time TX	-	Send a fax without using the memory.
		Overseas Mode	-	Set to On if you have difficulty sending faxes overseas.
		Call History	Redial	Redial the last number you dialled.
			Outgoing Call	Select a number from the Outgoing Call history and then send a fax to it, add it to the Address Book, or delete it.
			Caller ID History (Not available for Taiwan and some countries)	Select a number from the Caller ID History and then send a fax to it, add it to the Address Book, or delete it.
		Address Book	(Search:)	Search within the Address Book.
			Edit	Store Address Book numbers, set up Group numbers for Broadcasting, and change and delete Address Book numbers.
		Set New Default	-	Save your settings as the default.
		Factory Reset	-	Restore all settings back to the factory settings.
	Save as Shortcut	-	-	Save the current settings as a shortcut.
Received Faxes	Print/ Delete	Print All(New Faxes)	-	Print the new received faxes.
		Print All(Old Faxes)	-	Print the old received faxes.
		Delete All(New Faxes)	-	Delete the new received faxes.
		Delete All(Old Faxes)	-	Delete the old received faxes.
Address Book	(Search:)	-	-	Search within the Address Book.
	Edit	-	-	Store Address Book numbers, set up Group numbers for Broadcasting, and change and delete Address Book numbers.
	-	Apply	-	Start sending a fax using the Address Book.
Call History	Redial	-	-	Redial the last number you dialled.
	Outgoing Call	Apply	-	Select a number from the Outgoing Call history and then send a fax to it, add it to the Address Book, or delete it.
		Edit	-	
	Caller ID History (Not available for Taiwan and	Apply	-	Select a number from the Caller ID History and then send a fax to it, add it to the Address Book, or delete it.
		Edit	-	

Level 1	Level 2	Level 3	Level 4	Descriptions
Call History	some countries)			Select a number from the Caller ID History and then send a fax to it, add it to the Address Book, or delete it.

[Copy]

Level 1	Level 2	Level 3	Descriptions
Save as Shortcut	-	-	Save the current settings as a shortcut.
Options	Quality	-	Select the Copy resolution for your document type.
	Paper Type	-	Select the paper type that matches the paper in the tray.
	Paper Size	-	Select the paper size that matches the paper in the tray.
	Enlarge/Reduce	100%	-
		Enlarge	Select an enlargement ratio for the next copy.
		Reduce	Select a reduction ratio for the next copy.
		Fit to Page	Adjust the copy size to fit on the paper size you have set.
		Custom(25-400%)	Enter an enlargement or reduction ratio.
	2-sided Copy	-	Turn off or turn on 2-sided copying and select flip on long edge or flip on short edge.
	Density	-	Adjust the density.
	Remove Background Colour	Black Copy Settings	Change the amount of background colour that is removed.
		Colour Copy Settings	
	Stack/Sort	-	Select to stack or sort multiple copies.
	Page Layout	-	Make N in 1, 2 in 1 ID, or Poster copies.
	Advanced Settings (MFC-J890DW)	-	Select advanced copy settings.
	Set New Default	-	Save your settings as the default.
	Factory Reset	-	Restore all settings back to the factory settings.

[Scan]

Level 1	Level 2	Level 3	Level 4	Descriptions
to Media (When a memory card or USB Flash drive is inserted)	Other Scan to Actions	-	-	Scan documents and save them directly to a memory card or USB flash drive without using a computer.
	Options	-	-	
	Save as Shortcut	-	-	
to PC	to File	Other Scan to Actions	-	Scan documents and save them to a folder on your computer.
		(Select USB or PC)	Options	
			Save as Shortcut	

Level 1	Level 2	Level 3	Level 4	Descriptions
to PC	to OCR	Other Scan to Actions	-	Convert your scanned document to an editable text file.
		(Select USB or PC)	Options	
			Save as Shortcut	
	to Image	Other Scan to Actions	-	Scan photos or graphics into your graphics applications.
		(Select USB or PC)	Options	
			Save as Shortcut	
	to E-mail	Other Scan to Actions	-	Send a scanned document as an email attachment.
		(Select USB or PC)	Options	
			Save as Shortcut	
to Web	-	-	-	Upload the scanned data to an Internet service.
WS Scan (Appears when you install a Web Services Scanner, which is displayed in your computer's Network explorer.)	Other Scan to Actions	-	-	Scan data using the Web Service protocol.
	Scan	-	-	
	Scan for E-mail	-	-	
	Scan for Fax	-	-	
	Scan for Print	-	-	

[Photo]

Level 1	Level 2	Level 3	Level 4	Descriptions
Select Files	OK	Print Settings	-	Adjust your photos with the options.
	Print All	Print Settings	-	Print all photos in your USB flash drive.
Index Print	Print Index Sheet	Print Settings	-	Print a thumbnail page.
	Print Photos	Print Settings	-	Print photos by choosing the index numbers.
ID Photo Print	Select ID Photo Size	Rotate Image	Print Settings	Print ID photos for your resume, passport and so on.

[Web]

Level 1	Descriptions
Web	Connect the Brother machine to an Internet service.

[Apps]

Level 1	Descriptions
Apps	Connect the Brother machine to the Brother Apps service.

[Download Software]

Level 1	Descriptions
Download Software	Displays information about downloading and installing software for mobile devices and computers.

[Shortcuts]

Level 1	Level 2	Level 3	Descriptions
Add Shortcut	Copy	-	Change the settings in the Copy Options.
	Fax (MFC models)	-	Change the settings in the Fax Options.
	Scan	to PC(File)	Scan documents and save them to a folder on your computer.
		to PC(OCR)	Convert your scanned document to an editable text file.
		to PC(Image)	Scan photos or graphics into your graphics applications.
		to PC(E-mail)	Send a scanned document as an email attachment.
		to Media	Scan documents and save them directly to a memory card or USB flash drive without using a computer.
	Web	-	Connect the Brother machine to an Internet service.
	Apps	-	Connect the Brother machine to the Brother Apps service.
This list appears when each Shortcut icon is pressed for 2 seconds.	Rename	-	Change the shortcut name.
	Edit	-	Change the shortcut settings.
	Delete	-	Delete the shortcut.
Edit/Delete	(Select shortcut button.)	Rename	Change the shortcut name.
		Edit	Change the shortcut settings.
		Delete	Delete the shortcut.

[Ink]

Level 1	Level 2	Descriptions
Ink Volume	-	Check the available ink volume.
Ink Cartridge Model	-	Check your ink cartridge numbers.
Improve Print Quality	-	Check and correct the print quality, alignment and paper feeding according to the LCD instructions.
Print Head Cleaning	-	Clean the print head according to the LCD instructions.
Print Setting Options	Reduce Smudging	Reduce smudging on the paper or paper jams during printing.
	Slow Drying Paper	Use this setting when printing with a type of plain paper on which the ink dries very slowly.

(Wi-Fi Setup)

Level 1	Descriptions
Setup Wizard	Configure your wireless network settings manually.
WLAN Assistant	Configure your wireless network settings using the Brother installation disc.
WPS	Configure your wireless network settings using the one-button push method.

When you have put a USB Flash drive in the USB slot

Level 1	Descriptions
Photo	Select photo menu.
Scan to Media	Scan documents into a USB flash drive.
Web	Connect the Brother machine to an Internet service.

Related Information

- Settings and Features Tables

Change Machine Settings from Your Computer

- Change the Machine Settings Using Remote Setup
- Where Can I Find My Brother Machine's Network Settings?
- Network Management Software and Utilities

Change the Machine Settings Using Remote Setup

The Remote Setup program lets you configure many of your Brother machine's settings from your computer. When you start Remote Setup, the settings on your Brother machine will be downloaded to your computer and displayed on your screen. If you change the settings on your computer, you can upload them directly to the machine.

- Remote Setup (Windows)
- Remote Setup (Mac)

Remote Setup (Windows)

- Set Up the Brother Machine from Your Computer (Windows)
- Set Up the Brother Machine Using ControlCenter4 (Windows)
- Set Up Your Machine's Address Book Using ControlCenter4 (Windows)

Set Up the Brother Machine from Your Computer (Windows)

Related Models: MFC-J491DW/MFC-J690DW/MFC-J890DW

1. Do one of the following:
   - Windows 7

     Click **(Start)** > **All Programs** > **Brother** > **Brother Utilities**.

     Click the drop-down list and select your model name (if not already selected). Click **Tools** in the left navigation bar, and then click **Remote Setup**.
   - Windows 8 and Windows 10

     Launch (**Brother Utilities**), and then click the drop-down list and select your model name (if not already selected). Click **Tools** in the left navigation bar, and then click **Remote Setup**.

   The Remote Setup Program window appears.

   When your machine is connected via a Network, type the password if required.
2. Configure the settings as needed.

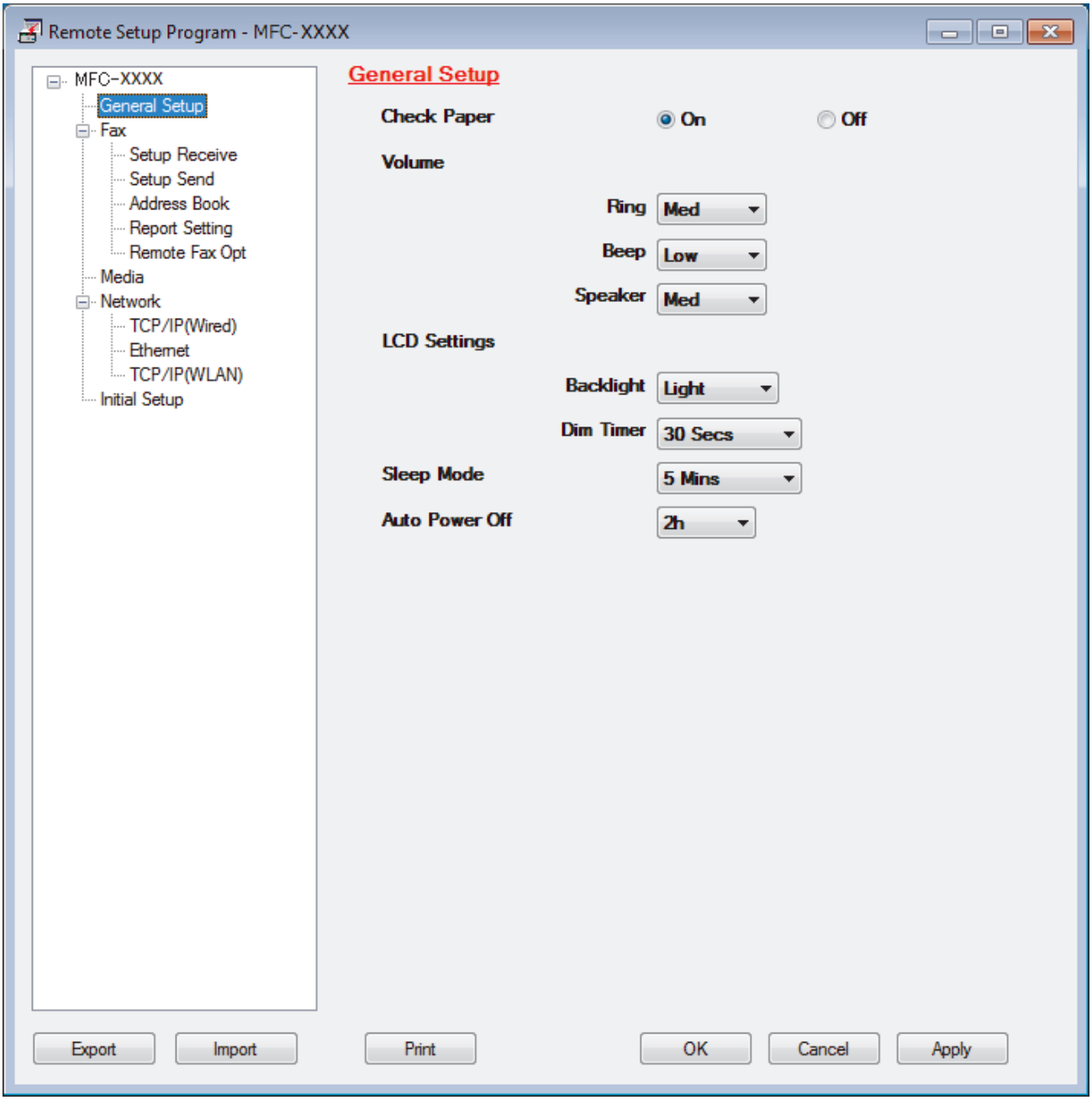

Export

Click to save the current configuration settings to a file.

Click **Export** to save your address book or all settings for your machine.

Import

Click to import a file and read its settings.

Print

Click to print the selected items on the machine. You cannot print the data until it is uploaded to the machine. Click **Apply** to upload the new data to the machine, and then click **Print**.

OK

Click to start uploading data to the machine, and then exit the Remote Setup Program. If an error message appears, confirm that your data is correct, and then click **OK**.

Cancel

Click to exit the Remote Setup Program without uploading data to the machine.

Apply

Click to upload data to the machine without exiting the Remote Setup Program.

3. Click **OK**.

- If your computer is protected by a firewall and is unable to use Remote Setup, you may need to configure the firewall settings to allow communication through port numbers 137 and 161.
- If you are using Windows Firewall and you installed the Brother software and drivers from the Brother installation disc, the necessary firewall settings have already been set.

Related Information

- Remote Setup (Windows)
- ControlCenter4 (Windows)

Set Up the Brother Machine Using ControlCenter4 (Windows)

Related Models: MFC-J491DW/MFC-J690DW/MFC-J890DW

1. Click the (**ControlCenter4**) icon in the task tray, and then click **Open**.
2. Click the **Device Settings** tab.
3. Click the **Remote Setup** button.
4. Configure the settings as needed.

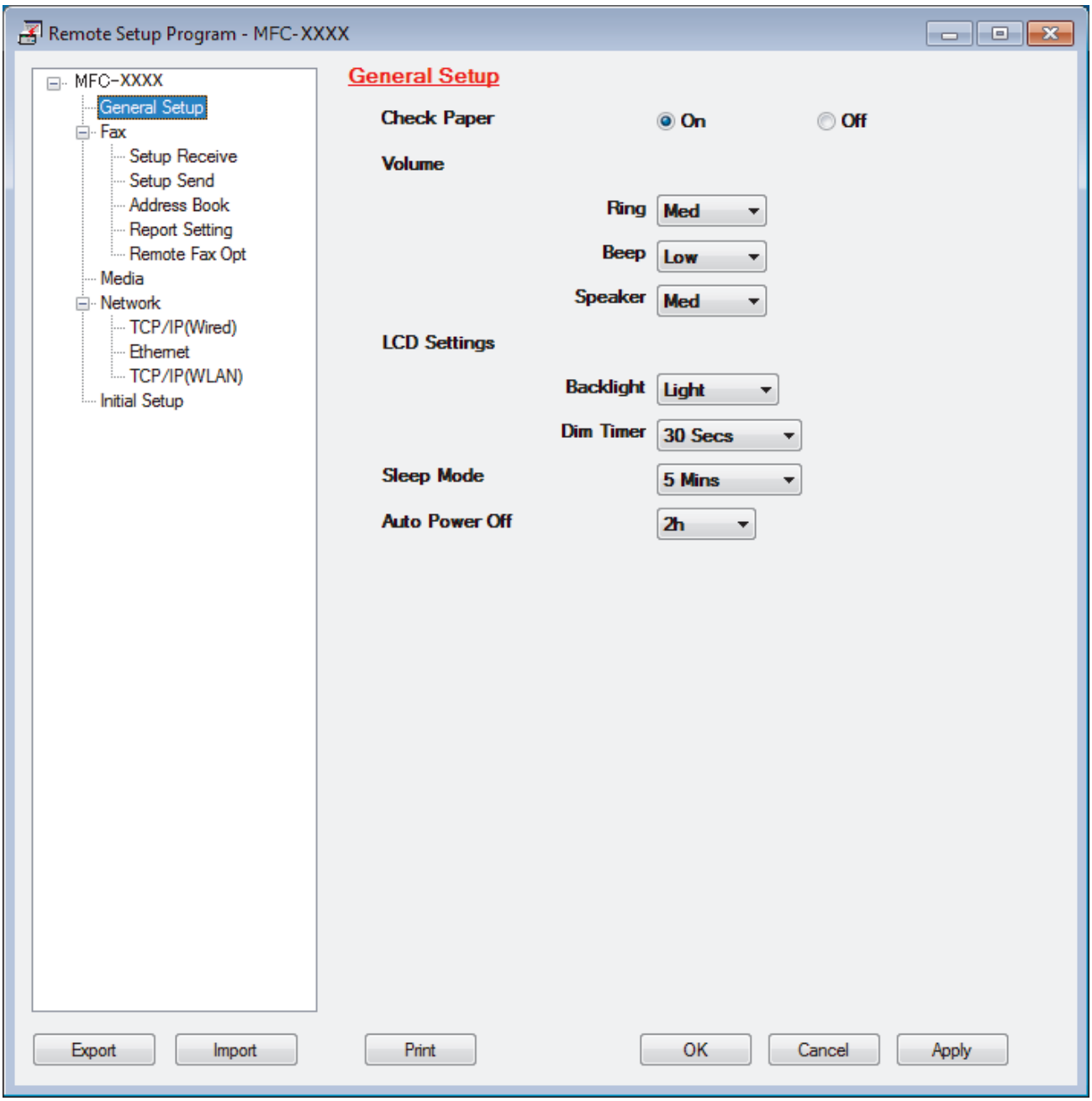

Export

Click to save the current configuration settings to a file.

Click **Export** to save your address book or all settings for your machine.

Import

Click to import a file and read its settings.

Print

Click to print the selected items on the machine. You cannot print the data until it is uploaded to the machine. Click **Apply** to upload the new data to the machine, and then click **Print**.

OK

Click to start uploading data to the machine, and then exit the Remote Setup Program. If an error message appears, confirm that your data is correct, and then click **OK**.

Cancel

Click to exit the Remote Setup Program without uploading data to the machine.

Apply

Click to upload data to the machine without exiting the Remote Setup Program.

5. Click **OK**.

- If your computer is protected by a firewall and is unable to use Remote Setup, you may need to configure the firewall settings to allow communication through port numbers 137 and 161.
- If you are using Windows Firewall and you installed the Brother software and drivers from the Brother installation disc, the necessary firewall settings have already been set.

Related Information

- ControlCenter4 (Windows)
- Remote Setup (Windows)

Set Up Your Machine's Address Book Using ControlCenter4 (Windows)

Related Models: MFC-J491DW/MFC-J690DW/MFC-J890DW

Use Remote Setup through CC4 to add or change Address Book numbers on your computer.

1. Click the (**ControlCenter4**) icon in the task tray, and then click **Open**.
2. Click the **Device Settings** tab.
3. Click the **Address Book** button.
   The **Address Book** opens in a Remote Setup window.
4. Add or update the Address Book information as needed.
5. Click **OK**.

Related Information

- Remote Setup (Windows)
- ControlCenter4 (Windows)

Remote Setup (Mac)

- Set Up the Brother Machine with a USB Cable Connection (Mac)
- Set Up Your Machine's Address Book with a USB Cable Connection (Mac)

Set Up the Brother Machine with a USB Cable Connection (Mac)

Related Models: MFC-J491DW/MFC-J690DW/MFC-J890DW

Use Remote Setup to set up your Brother machine with a USB cable connection.

To use Remote Setup, go to your model's **Downloads** page on the Brother Solutions Center at support.brother.com and download Remote Setup.

- Remote Setup for Mac supports USB connections only.

1. In the **Finder** menu bar, click **Go** > **Applications** > **Brother**, and then double-click the Remote Setup icon.
   The Remote Setup Program screen appears.

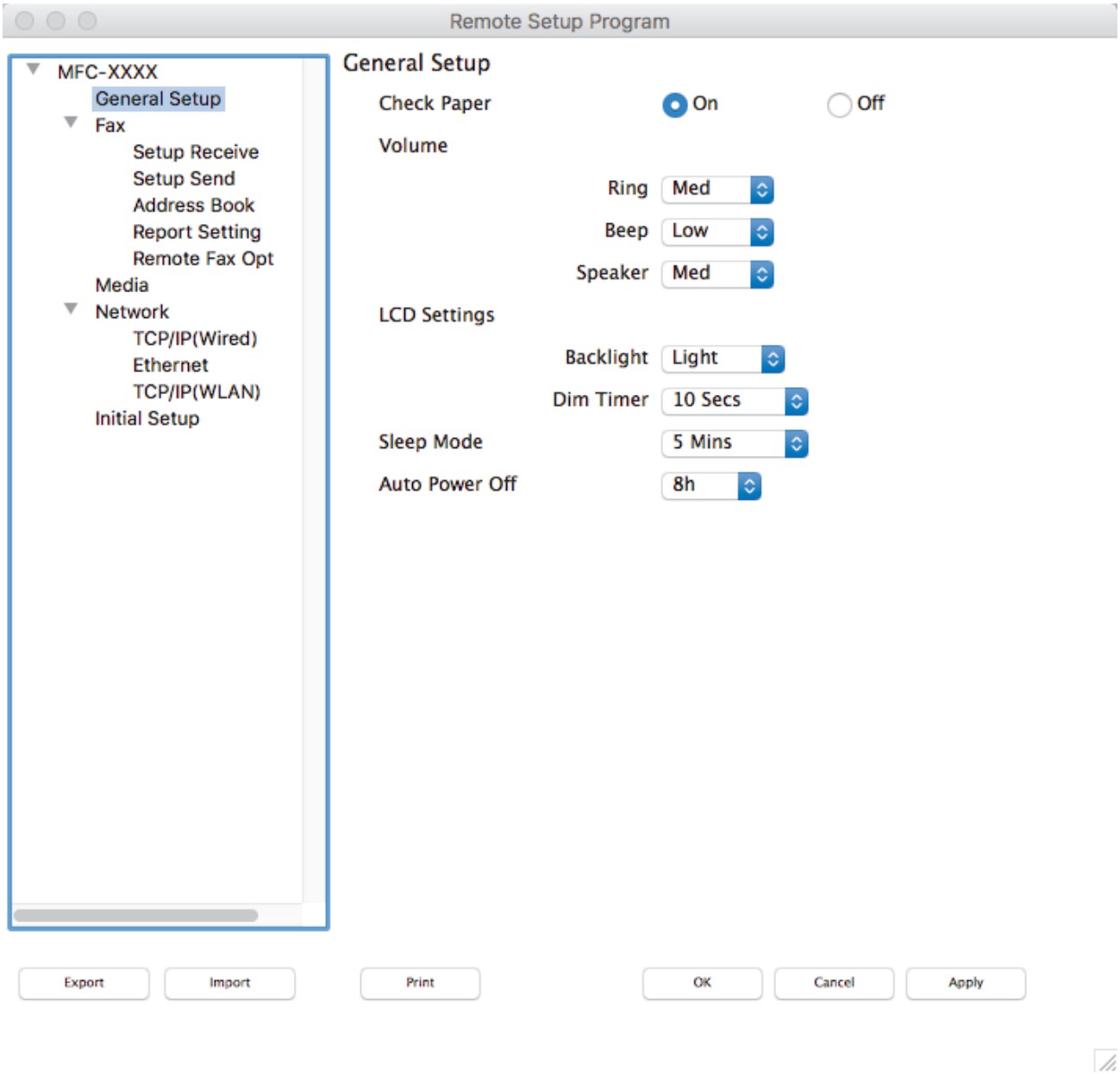

2. Configure the settings as needed.

Export

Click to save the current configuration settings to a file.

Click **Export** to save your address book or all settings for your machine.

Import

Click to import a file and read its settings.

Print

Click to print the selected items on the machine. You cannot print the data until it is uploaded to the machine. Click **Apply** to upload the new data to the machine, and then click **Print**.

OK

Click to start uploading data to the machine, and then exit the Remote Setup Program. If an error message appears, enter the correct data again, and then click **OK**.

Cancel

Click to exit the Remote Setup Program without uploading data to the machine.

Apply

Click to upload data to the machine without exiting the Remote Setup Program.

3. When finished, click **OK**.

Related Information

- Remote Setup (Mac)

Set Up Your Machine's Address Book with a USB Cable Connection (Mac)

Related Models: MFC-J491DW/MFC-J690DW/MFC-J890DW

Use Remote Setup to add or change Address Book numbers on your computer with a USB cable connection.

To use Remote Setup, go to your model's **Downloads** page on the Brother Solutions Center at support.brother.com and download Remote Setup.

- Remote Setup for Mac supports USB connections only.

1. In the **Finder** menu bar, click **Go** > **Applications** > **Brother**, and then double-click the Remote Setup icon.
   The Remote Setup Program screen appears.
2. In the left menu, click **Address Book** in the **Fax**.
3. Add or update the Address Book information as needed.
4. When finished, click **OK**.

Related Information

- Remote Setup (Mac)

Appendix

- Specifications
- Enter Text on Your Brother Machine
- Supply Specifications
- Brother Numbers

Specifications

General Specifications

Printer Type		Inkjet
Print Head	**Mono**	Piezo with 210 nozzles x 1
	Colour	• DCP-J572DW/MFC-J491DW Piezo with 70 nozzles x 3 • DCP-J772DW/MFC-J690DW/MFC-J890DW Piezo with 210 nozzles x 3
Memory Capacity		128 MB
Liquid Crystal Display (LCD) [1]		• DCP-J572DW/MFC-J491DW 1.8 in. (44.9 mm) TFT Colour LCD • DCP-J772DW/MFC-J690DW/MFC-J890DW 2.7 in. (67.5 mm) TFT Colour Touchscreen LCD
Power Source		AC 220 to 240 V 50/60 Hz
Power Consumption [2]		• DCP-J572DW **Copying** [3]: Approx. 16 W **Ready** [5]: Approx. 3 W **Sleep** [5]: Approx. 0.7 W **Power Off** [5] [6]: Approx. 0.2 W • MFC-J491DW **Copying** [4]: Approx. 16 W **Ready** [5]: Approx. 3.5 W **Sleep** [5]: Approx. 1 W **Power Off** [5] [6]: Approx. 0.2 W • DCP-J772DW **Copying** [3]: Approx. 17 W **Ready** [5]: Approx. 3.0 W **Sleep** [5]: Approx. 0.8 W **Power Off** [5] [6]: Approx. 0.2 W • MFC-J690DW **Copying** [4]: Approx. 17 W **Ready** [5]: Approx. 3.5 W **Sleep** [5]: Approx. 1.2 W **Power Off** [5] [6]: Approx. 0.2 W • MFC-J890DW **Copying** [4]: Approx. 17 W **Ready** [5]: Approx. 3.5 W **Sleep** [5]: Approx. 1.2 W **Power Off** [5] [6]: Approx. 0.2 W

Dimensions	• DCP-J572DW 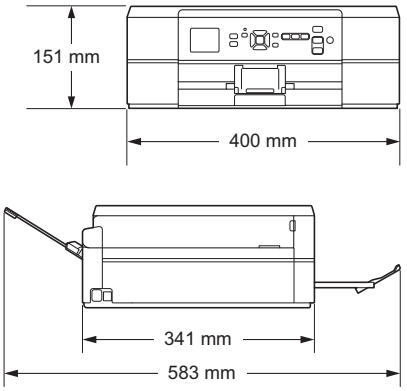 • DCP-J772DW 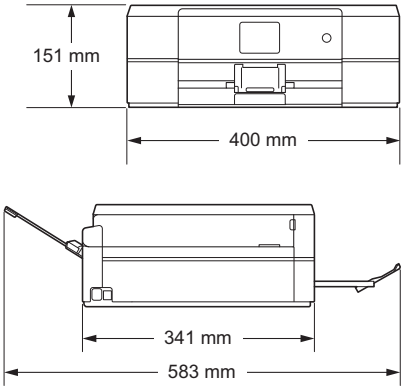 • MFC-J491DW 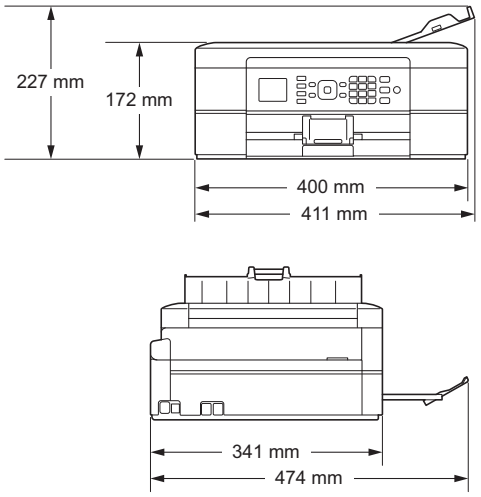

			• MFC-J690DW/MFC-J890DW 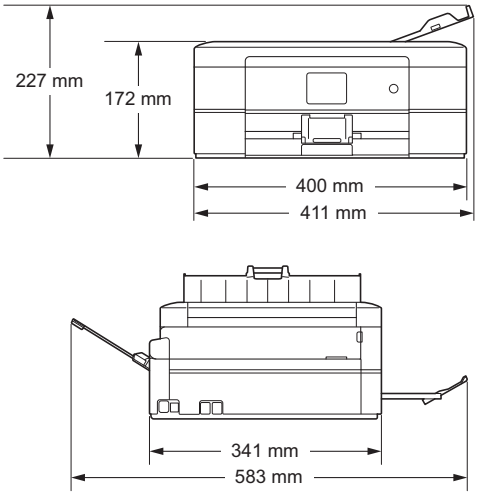
Weights			• DCP-J572DW 7.2 kg • MFC-J491DW 8.3 kg • DCP-J772DW 7.2 kg • MFC-J690DW 8.3 kg • MFC-J890DW 8.3 kg
Noise Level	**Sound Pressure**	**Operating**	50 dB (A) (Approx.) [7]
Temperature	**Operating**		10 to 35°C
	Best Print Quality		20 to 33°C
Humidity	**Operating**		20 to 80% (without condensation)
	Best Print Quality		20 to 80% (without condensation)
Automatic Document Feeder (ADF) [8]			Up to 20 pages Paper: 80 gsm

1 Measured diagonally

2 Measured when the machine is connected to the USB interface. Power consumption varies slightly depending on the usage environment or part wear.

3 When single-sided printing, resolution: standard / document: ISO/IEC 24712 printed pattern.

4 When using ADF, single-sided printing, resolution: standard / document: ISO/IEC 24712 printed pattern.

5 Measured according to IEC 62301 Edition 2.0.

6 Even when the machine is turned off, it will automatically turn itself on periodically for print head maintenance, and then turn itself off.

7 Noise depends on printing conditions.

8 ADF models only

Document Size Specifications

Document Size	**ADF Width** [1]	148 to 215.9 mm
	ADF Length [1 2]	148 to 355.6 mm
	Scanner Glass Width	Max. 215.9 mm
	Scanner Glass Length	Max. 297 mm

1 ADF models only

2 Documents that are longer than 297 mm must be fed one page at a time.

Print Media Specifications

Paper Input	**Paper Tray**	**Paper Type** [1]	Plain Paper, Inkjet Paper (coated paper), Glossy Paper, Recycled Paper
		Paper Size [2]	Letter, A4, Legal, Executive, B5 (JIS), A5, B6 (JIS), A6, Envelopes (C5, Com-10, DL, Monarch), Photo (10 x 15 cm), Photo 2L (13 x 18 cm), Index card (13 x 20 cm)
		Maximum Paper Capacity	• DCP-J572DW/DCP-J772DW/MFC-J491DW/ MFC-J690DW Up to 100 sheets of 80 gsm plain paper • MFC-J890DW Up to 150 sheets of 80 gsm plain paper
	Photo Paper Tray (DCP-J572DW/ DCP-J772DW/ MFC-J690DW)	**Paper Type** [1]	Plain Paper, Inkjet Paper (coated paper), Glossy Paper, Recycled Paper
		Paper Size	Photo (10 x 15 cm) and Photo L (9 x 13 cm)
		Maximum Paper Capacity	Up to 20 sheets thickness: 0.25 mm
	Manual Feed Slot (DCP-J572DW/ DCP-J772DW/ MFC-J690DW/ MFC-J890DW)	**Paper Type** [1]	Plain Paper, Inkjet Paper (coated paper), Glossy Paper, Recycled Paper
		Paper Size [2]	Letter, A4, Legal, Executive, B5 (JIS), A5, B6 (JIS), A6, Envelopes (C5, Com-10, DL, Monarch), Photo (10 x 15 cm), Photo L (9 x 13 cm), Photo 2L (13 x 18 cm), Index card (13 x 20 cm)
		Maximum Paper Capacity	Up to 1 sheet
Paper Output [1]			Up to 50 sheets of 80 gsm Plain Paper (face up print delivery to the output paper tray)

1 For glossy paper, remove printed pages from the output paper tray immediately after they exit the machine to avoid smudging.

2 Legal, B5 (JIS) and B6 (JIS) size paper are supported only in some countries.

Fax Specifications

This feature is available for MFC models.

Compatibility	ITU-T Group 3
Modem Speed	Automatic Fallback: 14,400 bps
Scanning Width (Single-sided document)	ADF: 208 mm (A4) Scanner Glass: 204 mm (A4)
Printing Width	204 mm (A4)
Greyscale	Monochrome: 8 bit (256 levels) Colour: 24 bit (8 bit per colour/ 256 levels)
Resolution (Horizontal)	203 dpi
Resolution (Vertical)	Standard: 98 dpi (Mono) 196 dpi (Colour)
	Fine: 196 dpi (Mono)

Resolution (Vertical)	196 dpi (Colour)
	Superfine: 392 dpi (Mono)
	Photo: 196 dpi (Mono)
Address Book	• MFC-J491DW 40 numbers • MFC-J690DW/MFC-J890DW 100 names x 2 numbers
Groups	Up to 6
Broadcasting	• MFC-J491DW 90 (40 Address Book/50 Manual Dial) • MFC-J690DW/MFC-J890DW 250 (200 Address Book/50 Manual Dial)
Automatic Redial	3 times at 5 minute intervals
Memory Transmission	• MFC-J491DW Up to 170 pages [1] • MFC-J690DW/MFC-J890DW Up to 200 pages [1]
Out of Paper Reception	• MFC-J491DW Up to 170 pages [1] • MFC-J690DW/MFC-J890DW Up to 200 pages [1]

1 'Pages' refers to the 'ITU-T Test Chart #1' (a typical business letter, Standard resolution, MMR code).

Copy Specifications

Colour/Monochrome	Yes/Yes
Copy Width	204 mm [1]
Multiple Copies	Stacks/Sorts up to 99 pages
Enlarge/Reduce	25% to 400% (in increments of 1%)
Resolution	• DCP-J572DW/MFC-J491DW Prints up to 1200 × 1200 dpi • DCP-J772DW/MFC-J690DW/MFC-J890DW Prints up to 1200 × 2400 dpi

1 When copying on A4 size paper.

PhotoCapture Center Specifications

This function is available for DCP-J572DW/DCP-J772DW/MFC-J690DW/MFC-J890DW.

Compatible Media [1]	MultiMediaCard (32 MB - 2 GB) MultiMediaCard plus (128 MB - 4 GB) MultiMediaCard mobile with Adapter (64 MB - 1 GB) SD Memory Card (16 MB - 2 GB) miniSD with Adapter (16 MB - 2 GB) microSD with Adapter (16 MB - 2 GB)

		SDHC Memory Card (4 GB - 32 GB) miniSDHC with Adapter (4 GB - 32 GB) microSDHC with Adapter (4 GB - 32 GB) SDXC Memory Card (48 GB - 256 GB) USB Flash drive [2] [3]
Photo	**Resolution**	• DCP-J572DW Up to 1200 × 3600 dpi • DCP-J772DW/MFC-J690DW/MFC-J890DW Up to 1200 x 6000 dpi
	Paper Type	Plain Paper, Inkjet Paper (coated paper), Glossy Paper, Brother BP71 paper
	Paper Size	A4, Letter, Photo (10 x 15 cm), Photo 2L (13 x 18 cm)
	File Format	JPEG (Progressive JPEG format is not supported)
Scan to Media	**File Format**	JPEG, PDF (Colour, Grey) TIFF, PDF (Monochrome)

1 Memory cards, adapters and USB Flash drives are not included.

2 The USB flash drive feature is available only for certain models. (DCP-J772DW/MFC-J690DW/MFC-J890DW)

3 Full-Speed USB 2.0. USB Mass Storage standard up to 256 GB. Supported formats: FAT12/FAT16/FAT32/exFAT

Scanner Specifications

Colour/Monochrome	Yes/Yes
TWAIN Compliant	Yes (Windows 7 SP1 / Windows 8 / Windows 8.1 / Windows 10) (macOS v10.10.5 / 10.11.x /10.12.x) (DCP-J772DW/MFC-J690DW/MFC-J890DW) (macOS v10.11.6 / 10.12.x /10.13.x) (DCP-J572DW/MFC-J491DW)
WIA Compliant	Yes (Windows 7 SP1 / Windows 8 / Windows 8.1 / Windows 10)
Colour Depth	30 bit colour processing (Input) 24 bit colour processing (Output)
Greyscale	10 bit colour processing (Input) 8 bit colour processing (Output)
Resolution	Up to 19200 × 19200 dpi (interpolated) [1] (from Scanner Glass) Up to 1200 × 2400 dpi (optical) (from ADF) [2] Up to 1200 × 600 dpi (optical)
Scanning Width and Length (Single-sided document)	(Scanner Glass) Width: Up to 213.9 mm Length: Up to 295 mm (ADF) [2] Width: Up to 213.9 mm Length: Up to 353.6 mm

1 Maximum 1200 × 1200 dpi scanning with the WIA driver in Windows 7 SP1, Windows 8, Windows 8.1 and Windows 10 (resolution up to 19200 × 19200 dpi can be selected using the scanner utility).

2 ADF models only

Printer Specifications

Resolution		Up to 1200 × 6000 dpi
Printing Width [1]		204 mm [210 mm (borderless)] [2]
Borderless [3]		A4, Letter, A6, Photo (10 x 15 cm), Photo L (9 x 13 cm), Photo 2L (13 x 18 cm), Index card (13 x 20 cm)
Automatic 2-sided	**Paper Type**	Plain Paper, Recycled Paper
	Paper Size [4]	A4, Letter, Executive, A5, B5 (JIS)
Print Speed		For detailed specifications visit www.brother.com.

1 When printing on A4 size paper.

2 When the Borderless feature is set to On.

3 Photo 2L-size paper is only supported by some models.

4 B5 (JIS) size paper is supported only in some countries.

Interface Specifications

USB [1 2]	Use a USB 2.0 interface cable that is no longer than 2 m.
LAN (MFC-J890DW)	Use an Ethernet UTP cable category 5 or greater.
Wireless LAN	IEEE 802.11b/g/n (Infrastructure) IEEE 802.11g/n (Wi-Fi Direct)
NFC (MFC-J890DW)	Yes

1 Your machine has a USB 2.0 Hi-Speed interface. The machine can also be connected to a computer that has a USB 1.1 interface.

2 Third party USB ports are not supported.

Network Specifications

- (DCP-J572DW)

  You can connect your machine to a network for Network Printing, Network Scanning, and to access photos over a network connection.
- (DCP-J772DW)

  You can connect your machine to a network for Network Printing, Network Scanning, and to access photos over a network connection.
- (MFC-J491DW/MFC-J690DW/MFC-J890DW)

  You can connect your machine to a network for Network Printing, Network Scanning, PC-Fax Send, PC-Fax Receive (Windows only), Remote Setup, and to access photos over a network connection.
- Brother **BRAdmin Light** (Windows only) is available as a download from Brother Solutions Center. Go to your model's **Downloads** page on the Brother Solutions Center at support.brother.com and download the software.
- (Windows) If you require more advanced machine management, use the latest version of Brother **BRAdmin Professional**. Go to your model's **Downloads** page on the Brother Solutions Center at support.brother.com and download the software.

Network Security (Wired) [1]	SSL/TLS (IPPS, HTTPS)
Network Security (Wireless)	SSL/TLS (IPPS, HTTPS)
Wireless Network Security	SSID (32 characters), WEP 64/128 bit, WPA-PSK (TKIP/AES), WPA2-PSK (TKIP/AES)

Wireless Setup Support Utility	**WPS**	Yes

1 Supported models only

Computer Requirements Specifications

Supported Operating Systems And Software Functions

Computer Platform & Operating System Version		**PC Interface**			**Processor**	**Hard Disk Space to Install**	
		USB [1]	**10/100 Base-TX (Ethernet)** [2]	**Wireless 802.11b/g/n**		**For Drivers**	**For Applications (Including Drivers)**
Windows Operating System	Windows 7 SP1 [3 4] Windows 8 [3 4] Windows 8.1 [3 4]	Printing PC Fax [5] Scanning Removable Disk (USB or Memory Card) [6]			32 bit (x86) or 64 bit (x64) processor	650 MB	1.3 GB
	Windows 10 Home [3 4] Windows 10 Pro [3 4] Windows 10 Education [3 4] Windows 10 Enterprise [3 4]						
	Windows Server 2008	N/A	Printing			50 MB	N/A
	Windows Server 2008 R2 Windows Server 2012 Windows Server 2012 R2 Windows Server 2016				64 bit (x64) processor		
Mac Operating System	(DCP-J772DW / MFC-J690DW / MFC-J890DW) macOS v10.10.5 macOS v10.11.x macOS v10.12.x	Printing PC-Fax (Send) [5] Scanning Removable Disk (USB or Memory Card) [6]			Intel® Processor	80 MB	550 MB
	(DCP-J572DW /						

	MFC-J491DW) macOS v10.11.6 macOS v10.12.x macOS v10.13.x				

1 Third party USB ports are not supported.

2 MFC-J890DW only

3 For WIA, 1200 x 1200 resolution. Brother Scanner Utility enables enhancing up to 19200 x 19200 dpi.

4 Nuance™ PaperPort™ 14SE supports Windows 7 SP1, Windows 8, Windows 8.1, Windows 10 Home, Windows 10 Pro, Windows 10 Education and Windows 10 Enterprise.

5 PC-Fax supports black and white only. (MFC models)

6 DCP-J572DW/DCP-J772DW/MFC-J690DW/MFC-J890DW only

For the latest driver updates, go to your model's **Downloads** page on the Brother Solutions Center at support.brother.com and download **Full Driver & Software Package**.

All trademarks, brand and product names are the property of their respective companies.

Related Information

- Appendix

Enter Text on Your Brother Machine

- The characters that are available may differ depending on your country.
- For touchscreen models, the keyboard layout may differ depending on the function you are setting.

>> DCP-J572DW
>> MFC-J491DW
>> DCP-J772DW/MFC-J690DW/MFC-J890DW

DCP-J572DW

You may need to enter text into the machine, for example, when you set the time and date.

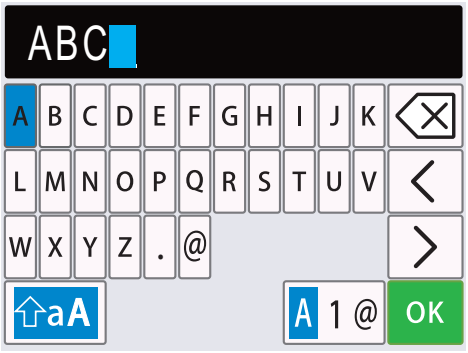

- Press ▲, ▼, ◀ or ▶ to select the number, letter or special character you want to select, and press **OK**. Repeat for each character until the number or name is complete and then press ▲, ▼, ◀ or ▶ to select OK and then press **OK**.
- Press ▲, ▼, ◀ or ▶ to select A 1 @, and then press **OK** to cycle between letters, numbers and special characters.
- Press ▲, ▼, ◀ or ▶ to select aA, and then press **OK** to cycle between lowercase and uppercase letters.

Inserting spaces

- To enter a space, press ▲, ▼, ◀ or ▶ to select >, and then press **OK**.

Making corrections

- If you entered an incorrect number or letter and want to change it, press ▲, ▼, ◀ or ▶ to select < or >. Press **OK** several times to move the cursor under the incorrect character. Then press ▲, ▼, ◀ or ▶ to select ⌫, and press **OK**. Re-enter the correct letter.

MFC-J491DW

When you are setting certain menu selections, such as the Station ID, you may need to enter text into the machine. Most dial pad buttons have three or four letters printed on the buttons. The buttons for **0**, **#** and ✳ do not have printed letters because they are used for special characters.

Press the appropriate dial pad button the number of times shown in this reference table to access the character you want.

Press Button	One Time	Two Times	Three Times	Four Times	Five Times	Six Times	Seven Times	Eight Times	Nine Times
2	A	B	C	a	b	c	2	A	B
3	D	E	F	d	e	f	3	D	E
4	G	H	I	g	h	i	4	G	H

Press Button	One Time	Two Times	Three Times	Four Times	Five Times	Six Times	Seven Times	Eight Times	Nine Times
5	J	K	L	j	k	l	5	J	K
6	M	N	O	m	n	o	6	M	N
7	P	Q	R	S	p	q	r	s	7
8	T	U	V	t	u	v	8	T	U
9	W	X	Y	Z	w	x	y	z	9

- To move the cursor to the left or right, press ▲, ▼, ◀ or ▶ to select < or >, and then press **OK**.

Inserting spaces

- To enter a space, press ▲, ▼, ◀ or ▶ to select >, and then press **OK**.

Making corrections

- If you entered an incorrect number or letter and want to change it, press ▲, ▼, ◀ or ▶ to select < or >. Press **OK** several times to move the cursor under the incorrect character. Then press ▲, ▼, ◀ or ▶ to select ⌫, and press **OK**. Re-enter the correct letter.

Special characters and symbols

Press ✳, **#** or **0** repeatedly until you see the special character or symbol you want.

Press ✳	(space) ! " # $ % & ' ( ) * + , - . / €
Press **#**	: ; < = > ? @ [ ] ^ _
Press **0**	Ä Ë Ö Ü À Ç È É 0

DCP-J772DW/MFC-J690DW/MFC-J890DW

When you need to enter text on your Brother machine, a keyboard will appear on the touchscreen.

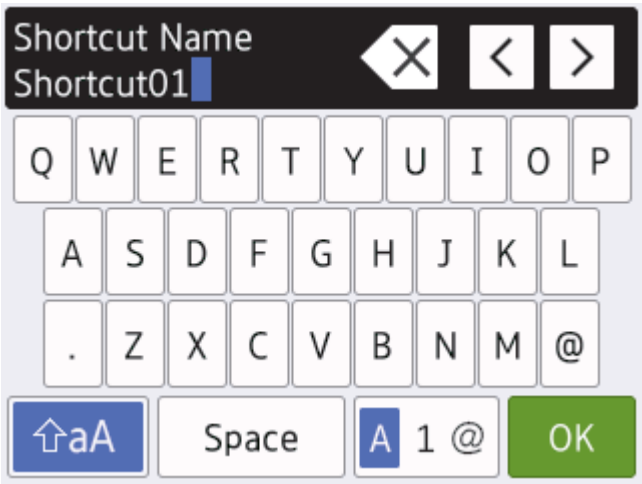

- Press A 1 @ to cycle between letters, numbers and special characters.
- Press ⇧aA to cycle between lowercase and uppercase letters.
- To move the cursor to the left or right, press ◀ or ▶.

Inserting spaces

- To enter a space, press `[Space]`. Or, you can press ▶ to move the cursor.

Making corrections

- If you entered an incorrect character and want to change it, press ◀ or ▶ to highlight the incorrect character. Press ⌫, and then enter the correct character.

- To insert a character, press ◄ or ► to move the cursor to the correct place, and then enter the character.
- Press for each character you want to erase, or press and hold to erase all the characters.

Related Information

- Appendix
- Send the Same Fax to More than One Recipient (Broadcasting)
- Store Address Book Numbers from Outgoing Calls
- Store Address Book Numbers from Caller ID History
- Change a Broadcasting Group Name
- Set Your Station ID
- Change or Delete Shortcuts

Supply Specifications

Ink	The machine uses individual Black, Yellow, Cyan and Magenta ink cartridges that are separate from the print head assembly.
Service Life of Ink Cartridge	The first time you install a set of ink cartridges the machine will use an amount of ink to fill the ink delivery tubes for high quality printouts. This process will only happen once. After this process is complete the page yield for the cartridges provided with your machine is approximately the same as that of standard cartridges.

Replacement Supplies

	(For Australia and other Oceania countries)	(For other countries)
Standard Yield Black	LC3311BK	LC3511BK
Standard Yield Yellow	LC3311Y	LC3511Y
Standard Yield Cyan	LC3311C	LC3511C
Standard Yield Magenta	LC3311M	LC3511M

Black, Yellow, Cyan and Magenta - Approximately 200 pages [1]

	(For Australia and other Oceania countries)	(For other countries)
High Yield Black	LC3313BK	LC3513BK
High Yield Yellow	LC3313Y	LC3513Y
High Yield Cyan	LC3313C	LC3513C
High Yield Magenta	LC3313M	LC3513M

Black, Yellow, Cyan and Magenta - Approximately 400 pages [1]

For more information about the replacement supplies, visit us www.brother.com/pageyield

What is Innobella?

Innobella is a range of genuine supplies offered by Brother. The name "Innobella" derives from the words "Innovation" and "Bella" (meaning "Beautiful" in Italian) and is a representation of the "innovative" technology providing you with "beautiful" and "long lasting" print results.

When you print photo images, Brother recommends Innobella glossy photo paper (BP71 series) for high quality. Brilliant prints are made easier with Innobella Ink and paper.

Related Information

- Appendix

1 Approx. cartridge yield is declared in accordance with ISO/IEC 24711

Brother Numbers

IMPORTANT

For technical help, you must call Brother Customer Service or your local Brother Dealer.

FAQs (Frequently Asked Questions)

The Brother Solutions Center is our one-stop resource for all your Machine needs. Download the latest software and utilities and read **FAQs & Troubleshooting** tips to learn how to get the most from your Brother product.

Check here for Brother driver updates, too.

support.brother.com

Customer Service

Visit www.brother.com for contact information on your local Brother office.

Service centre locations

For service centres in your area, contact your local Brother Office. Contact information for local Brother Offices can be found at www.brother.com and selecting your country.

Internet Addresses

Brother Global Web Site: www.brother.com

For Frequently Asked Questions (FAQs), Product Support and Technical Questions, and Driver Updates and Utilities:

support.brother.com

Related Information

- Appendix

brother

Brother Earth

www.brotherearth.com

OCE/ASA
Version C