Online User's Guide

DCP-L3510CDW
DCP-L3551CDW
MFC-L3710CW
MFC-L3735CDN
MFC-L3745CDW
MFC-L3750CDW
MFC-L3770CDW

© 2018 Brother Industries, Ltd. All rights reserved.

Table of Contents

Before You Use Your Brother Machine 1
Definitions of Notes 2
Trademarks 3
Important Note 4
Introduction to Your Brother Machine 5
Before Using Your Machine 6
Control Panel Overview 7
Touchscreen LCD Overview 11
How to Navigate the Touchscreen LCD 15
Settings Screen Overview 17
Set the Main Home Screen 18
Access Brother Utilities (Windows) 19
Uninstall the Brother Software and Drivers (Windows) 21
Input/Output Port Locations on Your Brother Machine 22
Paper Handling 23
Load Paper 24
Load and Print Using the Paper Tray 25
Load and Print Using the Multi-purpose Tray (MP Tray) 29
Load and Print Paper in the Manual Feed Slot 39
Paper Settings 46
Change the Paper Size and Paper Type 47
Select the Tray to Be Used For Printing 48
Change the Check Paper Size Setting 49
Load Documents 50
Load Documents in the Automatic Document Feeder (ADF) 51
Load Documents on the Scanner Glass 53
Unscannable and Unprintable Areas 54
Using Special Paper 55
Print 56
Print from Your Computer (Windows) 57
Print a Document (Windows) 58
Print Settings (Windows) 60
Secure Print (Windows) 64
Change the Default Print Settings (Windows) 66
Print a Document Using the BR-Script3 Printer Driver (PostScript® 3™ Language Emulation) (Windows) 67
Monitor the Status of the Machine from Your Computer (Windows) 68
Print from Your Computer (Mac) 69
Print a Document (Mac) 70
Print Options (Mac) 71
Secure Print (Mac) 77
Print a Document Using the BR-Script3 Printer Driver (PostScript® 3™ language emulation) (Mac) 79
Monitor the Status of the Machine from Your Computer (Mac) 80
Cancel a Print Job 81

Test Print 82
Scan 83
Scan Using the Scan Button on Your Brother Machine 84
Scan Photos and Graphics 85
Save Scanned Data to a Folder as a PDF File 88
Save Scanned Data to a USB Flash Drive 91
Scan to an Editable Text File (OCR) 93
Scan to Email Attachment 96
Scan to FTP 99
Scan to Network (Windows) 104
Scan to SharePoint 109
Web Services for Scanning on Your Network (Windows 7, Windows 8 and Windows 10) 114
Change Scan Button Settings from ControlCenter4 (Windows) 118
Change Scan Button Settings from Brother iPrint&Scan (Mac) 122
Configure Certificate for Signed PDF 123
Disable Scanning from Your Computer 124
Scan from Your Computer (Windows) 125
Scan Using ControlCenter4 Home Mode (Windows) 126
Scan Using ControlCenter4 Advanced Mode (Windows) 143
Scan Using Nuance™ PaperPort™ 14SE or Other Windows Applications 159
Scan Using Windows Fax and Scan 164
Scan from Your Computer (Mac) 168
Scan Using Brother iPrint&Scan (Mac) 169
Scan Using TWAIN-Compliant Applications (Mac) 170
TWAIN Driver Settings (Mac) 172
Configure Scan Settings Using Web Based Management 175
Set the Scan File Name Using Web Based Management 176
Set the Scan Job Email Report Using Web Based Management 177
Copy 178
Copy a Document 179
Enlarge or Reduce Copied Images 182
Make N in 1 Copies Using the Page Layout Feature 183
Sort Copies 185
Copy an ID Card 186
Copy on Both Sides of the Paper (2-sided Copy) 188
Copy Options 191
Fax 194
Send a Fax 195
Send a Fax 196
Send a 2-sided Fax from the ADF 198
Send a Fax Manually 199
Send a Fax at the End of a Conversation 200
Send the Same Fax to More than One Recipient (Broadcasting) 201
Send a Fax in Real Time 203
Send a Fax at a Specified Time (Delayed Fax) 204
Add a Cover Page to Your Fax 205
Cancel a Fax in Progress 207

Check and Cancel a Pending Fax 208
Fax Options 209
Receive a Fax 210
Receive Mode Settings 211
Memory Receive Options 222
Remote Fax Retrieval 229
Voice Operations and Fax Numbers 235
Voice Operations 236
Store Fax Numbers 239
Set up Groups for Broadcasting 243
Dial Access Codes and Credit Card Numbers 247
Telephone Services and External Devices 248
Caller ID 249
External TAD (Telephone Answering Device) 250
External and Extension Telephones 253
Multi-line Connections (PBX) 259
Fax Reports 260
Print a Transmission Verification Report 261
Print a Fax Journal 262
PC-FAX 263
PC-FAX for Windows 264
PC-FAX for Mac 285
Print Data Directly from a USB Flash Drive 288
Compatible USB Flash Drives 289
Print Data Directly from a USB Flash Drive or Digital Camera Supporting Mass Storage 290
Create a PRN File for Direct Printing (Windows) 292
Network 293
Configure Network Details Using the Control Panel 294
Supported Basic Network Features 295
Network Management Software and Utilities 296
Learn about Network Management Software and Utilities 297
Additional Methods of Configuring Your Brother Machine for a Wireless Network 299
Before Configuring Your Brother Machine for a Wireless Network 300
Configure Your Machine for a Wireless Network 301
Configure Your Machine for a Wireless Network Using the One Push Method of Wi-Fi Protected Setup™ (WPS) 302
Configure Your Machine for a Wireless Network Using the PIN Method of Wi-Fi Protected Setup™ (WPS) 304
Configure Your Machine for a Wireless Network Using the Machine's Control Panel Setup Wizard 308
Configure Your Machine for a Wireless Network When the SSID Is Not Broadcast 311
Configure Your Machine for an Enterprise Wireless Network 314
Use Wi-Fi Direct® 319
Advanced Network Features 333
Print the Network Configuration Report 334
Print the WLAN Report 335
Synchronize Time with the SNTP Server Using Web Based Management 338
Technical Information for Advanced Users 341

Reset the Network Settings to the Factory Settings ... 342
Security ... 343
Lock the Machine Settings ... 344
Setting Lock Overview ... 345
Network Security Features ... 349
Before Using Network Security Features ... 350
Secure Function Lock 3.0 ... 351
Manage Your Network Machine Securely Using SSL/TLS ... 357
Send an Email Securely ... 387
Use IEEE 802.1x Authentication for a Wired or a Wireless Network ... 391
Store Print Log to Network ... 396
Mobile/Web Connect ... 402
Brother Web Connect ... 403
Brother Web Connect Overview ... 404
Online Services Used with Brother Web Connect ... 405
Conditions for Using Brother Web Connect ... 407
Set Up Brother Web Connect ... 411
Scan and Upload Documents Using Brother Web Connect ... 420
Download and Print Documents Using Brother Web Connect ... 421
FaxForward to Cloud or E-mail ... 424
Google Cloud Print ... 427
Google Cloud Print Overview ... 428
Before Using Google Cloud Print ... 429
Print from Google Chrome™ or Chrome OS™ ... 433
Print from Google Drive™ for Mobile ... 434
Print from Gmail™ Webmail Service for Mobile ... 435
AirPrint ... 436
AirPrint Overview ... 437
Before Using AirPrint (macOS) ... 438
Print Using AirPrint ... 439
Scan Using AirPrint (macOS) ... 442
Send a Fax Using AirPrint (macOS) ... 443
Mobile Printing for Windows ... 444
Mopria® Print Service ... 445
Brother iPrint&Scan for Mobile Devices ... 446
Near-Field Communication (NFC) ... 447
ControlCenter ... 448
ControlCenter4 (Windows) ... 449
Change the Operation Mode in ControlCenter4 (Windows) ... 450
Scan Using ControlCenter4 Home Mode (Windows) ... 452
Scan Using ControlCenter4 Advanced Mode (Windows) ... 453
Set Up the Brother Machine Using ControlCenter4 (Windows) ... 454
Create a Custom Tab Using ControlCenter4 Advanced Mode (Windows) ... 456
Brother iPrint&Scan for Windows and Mac ... 458
Brother iPrint&Scan Overview ... 459
Troubleshooting ... 460

Error and Maintenance Messages 461
Transfer Your Faxes or Fax Journal Report 471
Error Messages When Using the Brother Web Connect Feature 475
Document Jams 477
Document is Jammed in the Top of the ADF Unit 478
Document is Jammed under the Document Cover 479
Remove Small Scraps of Paper Jammed in the ADF 480
Paper Jams 481
Paper is Jammed in the MP tray 482
Paper is Jammed in the Manual Feed Slot 483
Paper is Jammed in the Paper Tray 484
Paper is Jammed in the Output Paper Tray 486
Paper is Jammed in the Back of the Machine 487
Paper is Jammed Inside the Machine 489
Paper is Jammed underneath the Paper Tray 491
Printing Problems 493
Improve the Print Quality 496
Telephone and Fax Problems 502
Set Dial Tone Detection 505
Set Telephone Line Compatibility for Interference and VoIP Systems 506
Network Problems 507
Error Messages 508
Use the Network Connection Repair Tool (Windows) 511
Where Can I Find My Brother Machine's Network Settings? 512
I Cannot Complete the Wireless Network Setup Configuration 513
My Brother Machine Cannot Print, Scan, or PC-FAX Receive over the Network 515
I Want to Check that My Network Devices are Working Correctly 517
Google Cloud Print Problems 518
AirPrint Problems 519
Other Problems 520
Check the Machine Information 522
Reset Your Brother Machine 523
Reset Functions Overview 525
Routine Maintenance 527
Replace Supplies 528
Replace the Toner Cartridge 530
Replace the Drum Unit 534
Replace the Belt Unit 539
Replace the Waste Toner Box 543
Clean the Machine 548
Clean the Scanner 550
Clean the LED Heads 551
Clean the Touchscreen LCD 552
Clean the Corona Wires 553
Clean the Drum Unit 556
Clean the Paper Pick-up Rollers 565
Calibrate Colour Output 566

Reset the Machine's Calibration Settings 567
Correct Colour Print Alignment (Colour Registration) 568
Check the Remaining Part Life 569
Pack and Ship Your Brother Machine 570
Replace Periodic Maintenance Parts 572
Machine Settings 573
Change Machine Settings from the Control Panel 574
In the Event of Power Failure (Memory Storage) 575
General Settings 576
Save Your Favourite Settings as a Shortcut 593
Print Reports 596
Settings and Features Tables 599
Change Machine Settings from Your Computer 624
Change Machine Settings Using Web Based Management 625
Change the Machine Settings Using Remote Setup 629
Appendix 640
Specifications 641
How to Enter Text on Your Brother Machine 652
Supplies 654
Important Information About Toner Cartridge Life 656
Brother Numbers 657

Before You Use Your Brother Machine

- Definitions of Notes
- Trademarks
- Important Note

Definitions of Notes

We use the following symbols and conventions throughout this User's Guide:

WARNING	WARNING indicates a potentially hazardous situation which, if not avoided, could result in death or serious injuries.
CAUTION	CAUTION indicates a potentially hazardous situation which, if not avoided, may result in minor or moderate injuries.
IMPORTANT	IMPORTANT indicates a potentially hazardous situation which, if not avoided, may result in damage to property or loss of product functionality.
NOTE	NOTE specifies the operating environment, conditions for installation, or special conditions of use.
	Tips icons indicate helpful hints and supplementary information.
	Electrical Hazard icons alert you to possible electrical shock.
	Fire Hazard icons alert you to the possibility of a fire.
	Hot Surface icons warn you not to touch hot machine parts.
	Prohibition icons indicate actions you must not perform.
Bold	Bold style identifies buttons on the machine's control panel or computer screen.
Italics	Italicised style emphasises an important point or refers you to a related topic.
`Courier New`	Courier New font identifies messages shown on the machine's LCD.

Related Information

- Before You Use Your Brother Machine

Trademarks

Microsoft, Windows, Windows Server, SharePoint, Internet Explorer, PowerPoint, Excel and OneNote are either registered trademarks or trademarks of Microsoft Corporation in the United States and/or other countries.

Apple, App Store, Mac, macOS, Safari, AirPrint, the AirPrint logo, iPad, iPhone and iPod touch are trademarks of Apple Inc., registered in the United States and other countries.

Nuance and PaperPort are trademarks or registered trademarks of Nuance Communications, Inc. or its affiliates in the United States and/or other countries.

PostScript and PostScript 3 are either registered trademarks or trademarks of Adobe Systems Incorporated in the United States and/or other countries.

Wi-Fi, Wi-Fi Alliance and Wi-Fi Direct are registered trademarks of Wi-Fi Alliance®.

WPA, WPA2, Wi-Fi CERTIFIED, Wi-Fi Protected Setup and Wi-Fi Protected Setup logo are trademarks of Wi-Fi Alliance®.

Android, Gmail, Google Cloud Print, Google Drive, Google Chrome, Chrome OS and Google Play are trademarks of Google LLC. Use of these trademarks is subject to Google Permissions.

Mopria® and the Mopria® Logo are registered trademarks and service marks of Mopria Alliance, Inc. in the United States and other countries. Unauthorised use is strictly prohibited.

Mozilla and Firefox are registered trademarks of the Mozilla Foundation.

Intel is a trademark of Intel Corporation in the U.S. and/or other countries.

Evernote is a trademark of Evernote Corporation and used under a license.

The Bluetooth® word mark is a registered trademark owned by the Bluetooth SIG, Inc. and any use of such marks by Brother Industries, Ltd. is under license.

WordPerfect is a registered trademark of Corel Corporation and/or its subsidiaries in Canada, the United States and/or other countries.

PictBridge is a trademark.

Each company whose software title is mentioned in this manual has a Software License Agreement specific to its proprietary programs.
Any trade names and product names of companies appearing on Brother products, related documents and any other materials are all trademarks or registered trademarks of those respective companies.

Related Information

- Before You Use Your Brother Machine

Important Note

- Do not use this product outside the country of purchase as it may violate the wireless telecommunication and power regulations of that country.
- Not all models are available in all countries.
- Windows 10 in this document represents Windows 10 Home, Windows 10 Pro, Windows 10 Education and Windows 10 Enterprise.
- Windows Server 2008 in this document represents Windows Server 2008 and Windows Server 2008 R2.
- In this User's Guide, the LCD messages of the DCP-L3510CDW/MFC-L3770CDW are used unless otherwise specified.
- In this User's Guide, the illustrations of the MFC-L3770CDW are used unless otherwise specified.
- The screens in this User's Guide are for illustration purposes only and may differ from the actual screens.
- Unless otherwise specified, the screens in this manual are from Windows 7 and macOS v10.12.x. Screens on your computer may vary depending on your operating system.
- The contents of this guide and the specifications of this product are subject to change without notice.
- This documentation is both for MFC and DCP models.
- Not all features are available in countries subject to applicable export restrictions.

Related Information

- Before You Use Your Brother Machine

Introduction to Your Brother Machine

- Before Using Your Machine
- Control Panel Overview
- Touchscreen LCD Overview
- How to Navigate the Touchscreen LCD
- Settings Screen Overview
- Set the Main Home Screen
- Access Brother Utilities (Windows)
- Input/Output Port Locations on Your Brother Machine

Before Using Your Machine

Before attempting any printing operation, confirm the following:

- Make sure you have installed the Brother software and drivers.
- For USB or network cable users: Make sure the interface cable is physically secure.

Simultaneous printing, scanning and faxing

Your machine can print from your computer while sending or receiving a fax into memory or while scanning a document into the computer. Fax sending will not be stopped during printing from your computer. However, when the machine is copying or receiving a fax on paper, it pauses the printing operation, and then continues printing when copying or fax receiving has finished.

DCP models do not support the fax feature.

Firewall (Windows)

If your computer is protected by a firewall and you are unable to network print, network scan, or PC-FAX, you may need to configure the firewall settings. If you are using the Windows Firewall and you installed the drivers using the steps in the installer, the necessary firewall settings have been already set. If you are using any other personal firewall software, see the User's Guide for your software or contact the software manufacturer.

Related Information

- Introduction to Your Brother Machine

Control Panel Overview

The control panel may vary depending on your model.

>> DCP-L3510CDW/DCP-L3551CDW
>> MFC-L3710CW/MFC-L3735CDN/MFC-L3745CDW/MFC-L3750CDW/MFC-L3770CDW

DCP-L3510CDW/DCP-L3551CDW

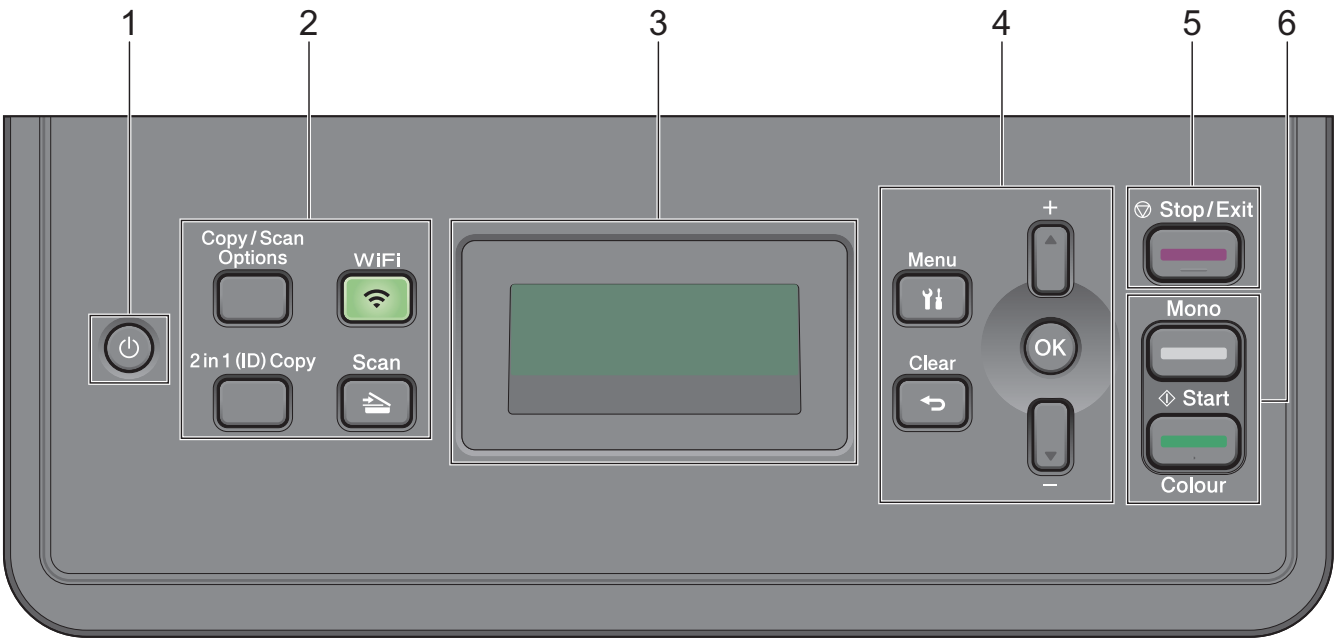

1. **Power On/Off**

   - Turn the machine on by pressing .
   - Turn the machine off by pressing and holding . The LCD displays `[Shutting Down]` and stays on for a few seconds before turning off.

2. **Function Buttons**

   Copy/Scan Options

   Press to access temporary settings for scanning or copying.

   WiFi (for wireless models)

   Press the **WiFi** button and launch the wireless installer on your computer. Follow the on-screen instructions to set up a wireless connection between your machine and your network.

   When the **WiFi** light is on, your Brother machine is connected to a wireless access point. When the **WiFi** light blinks, the wireless connection is down, or your machine is in the process of connecting to a wireless access point.

   Scan

   Press to switch the machine to Scan Mode.

   2 in 1 (ID) Copy

   Press to copy both sides of an identification card onto a single page.

3. **Liquid Crystal Display (LCD)**

   Displays messages to help you set up and use the machine.

   If the machine is in Ready Mode or Copy Mode, the LCD displays:

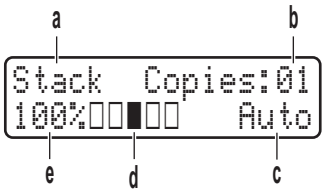

   a. Type of copy

   b. Number of copies

   c. Quality

   d. Contrast

   e. Copy ratio

4. **Menu Buttons**

   Menu

   Press to access the Menu for programming your machine settings.

   Clear

   - Press to delete entered data.
   - Press to cancel the current setting.

   OK

   Press to store your machine settings.

   ▲ or ▼

   Press to scroll up or down through menus and options.

5. **Stop/Exit**
   - Press to stop an operation.
   - Press to exit from a menu.

6. **Start buttons**
   - **Mono Start**
     - Press to start making copies in monochrome.
     - Press to start scanning documents (in colour, grey, or monochrome depending on the scan setting).
   - **Colour Start**
     - Press to start making copies in full colour.
     - Press to start scanning documents (in colour, grey, or monochrome depending on the scan setting).

MFC-L3710CW/MFC-L3735CDN/MFC-L3745CDW/MFC-L3750CDW/MFC-L3770CDW

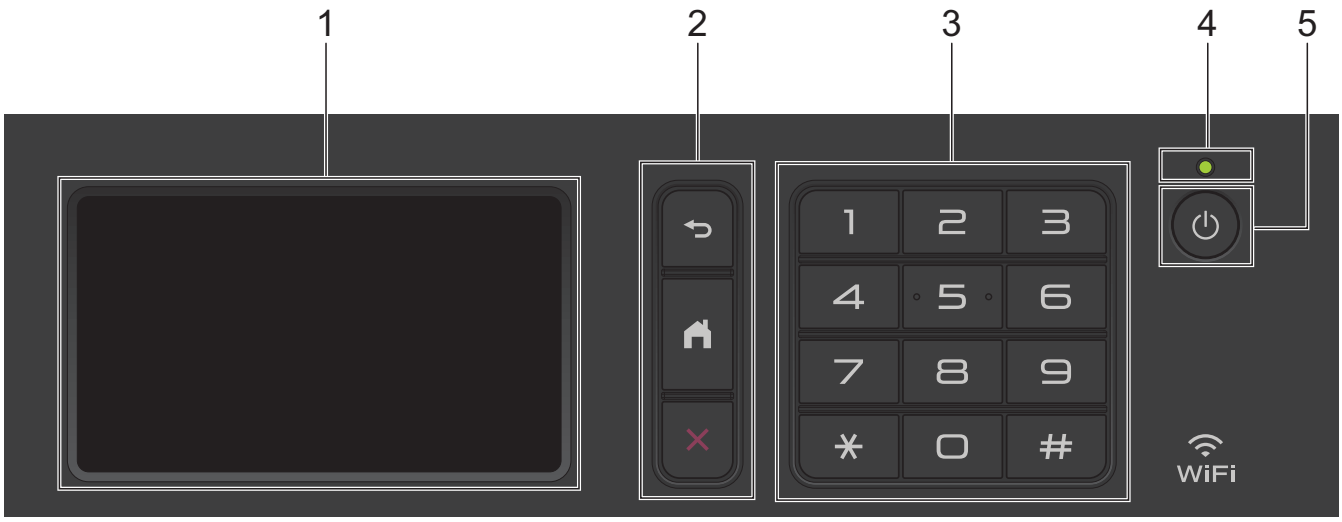

1. **Touchscreen Liquid Crystal Display (LCD)**

   Access menus and options by pressing them on the touchscreen.

2. **Menu Buttons**

   (Back)

   Press to go back to the previous menu.

   (Home)

   Press to return to the Main Home screen.

   (Cancel)

   Press to cancel an operation.

3. **Dial Pad (Numerical buttons)**

   Press the Numerical buttons to dial telephone or fax numbers, and to enter the number of copies.

4. **LED Power Indicator**

   The LED lights up depending on the machine's power status.

5. **Power On/Off**

   - Turn the machine on by pressing .
   - Turn the machine off by pressing and holding down . The LCD displays `[Shutting Down]` for a few seconds before going off. If you have an external telephone or TAD connected, it is always available.

Near Field Communication (NFC) (MFC-L3770CDW)

If your Android™ device supports the NFC feature, you can print from your device or scan documents to your device by touching it to the NFC symbol.

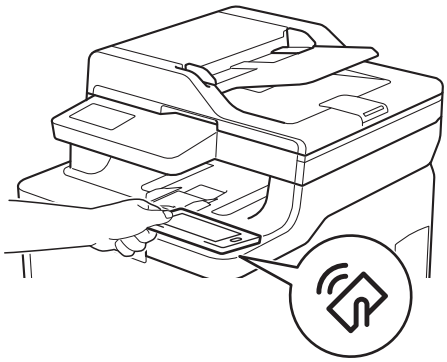

Related Information

- Introduction to Your Brother Machine

Touchscreen LCD Overview

Related Models: MFC-L3710CW/MFC-L3735CDN/MFC-L3745CDW/MFC-L3750CDW/MFC-L3770CDW

You can select from two types of screens to set as the Main Home screen: Home screens and Shortcuts screens. When a Home screen is displayed, swipe left or right or press ◀ or ▶ to display the other Home screens.

The Main Home screen displays the machine's status when the machine is idle. When displayed, this screen indicates that your machine is ready for the next command.

The available features vary depending on your model.

Home screen: Screen 1

The Home screens provide access to features, such as Fax, Copy, and Scan.

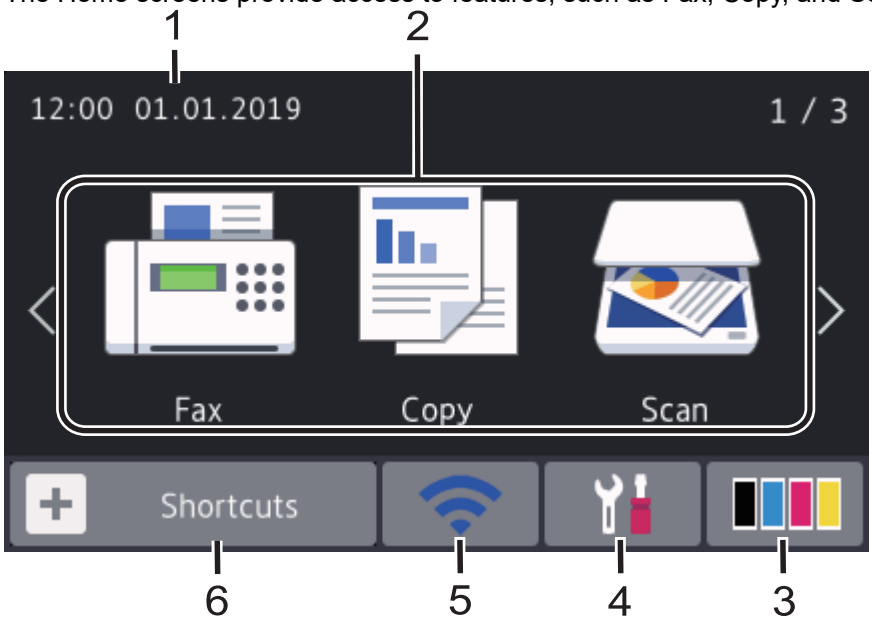

Home screen: Screen 2

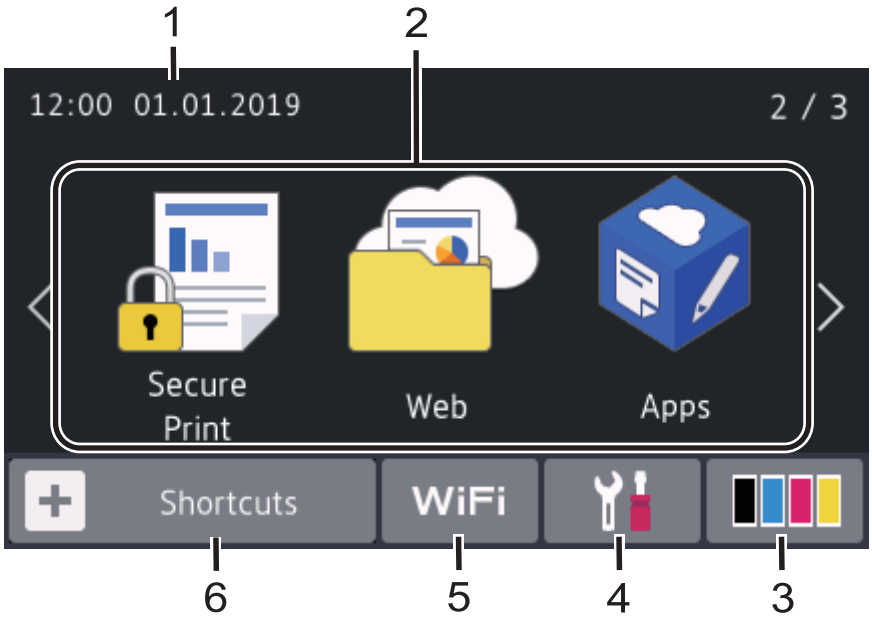

Home screen: Screen 3

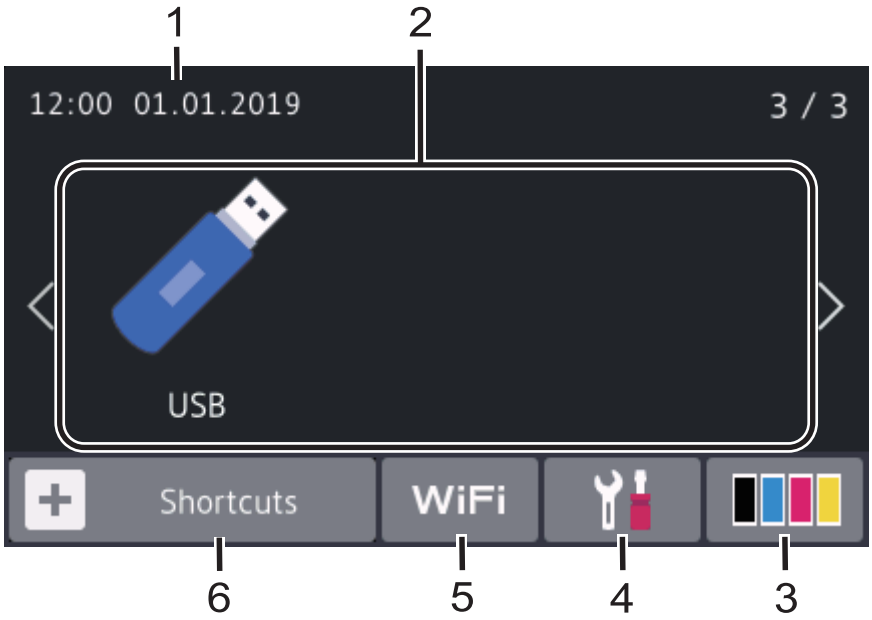

Shortcuts screen

Create Shortcuts for frequently-used operations, such as sending a fax, copying, scanning, and using Web Connect.

Three Shortcuts tabs are available with six Shortcuts on each Shortcuts tab. A total of 18 Shortcuts are available.

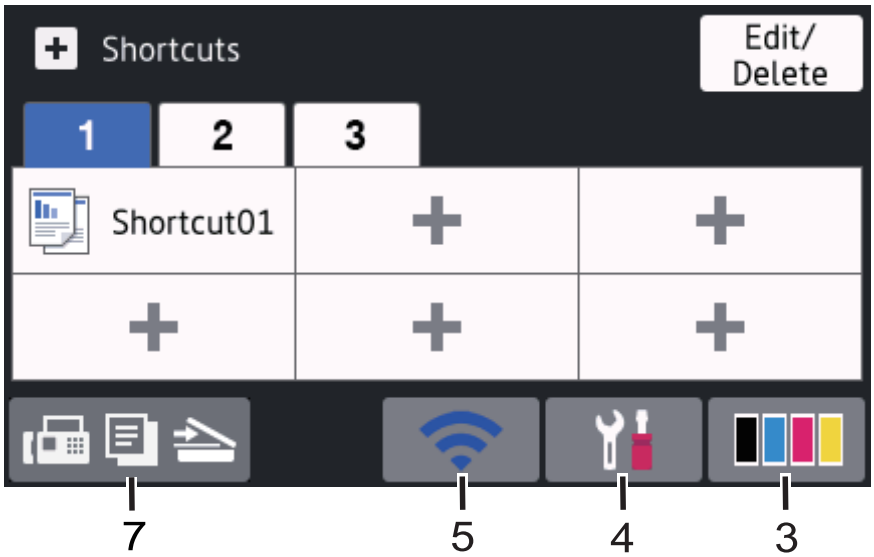

1. **Date & Time**

   Displays the date and time set on the machine.

2. **Modes**

   - **[Fax]**

     Press to access Fax mode.

   - **[Copy]**

     Press to access Copy mode.

   - **[Scan]**

     Press to access Scan mode.

   - **[Secure Print]**

     Press to access the [Secure Print] option.

- **[Web]**

  Press to connect the Brother machine to an Internet service.

- **[Apps]**

  Press to connect the Brother machine to the Brother Apps service.

- **[USB]**

  Press to access the USB menu and select [Scan to USB] or [Direct Print] options.

3. **(Toner)**

   Displays the remaining toner life. Press to access the [Toner] menu.

4. **(Settings)**

   Press to access the [Settings] menu.

   If Setting Lock has been turned on, a lock icon appears on the LCD. You must unlock the machine to change settings.

5. WiFi or **(Wireless Status)**

   Press to configure wireless settings.
   If you are using a wireless connection, a four-level indicator displays the current wireless signal strength.

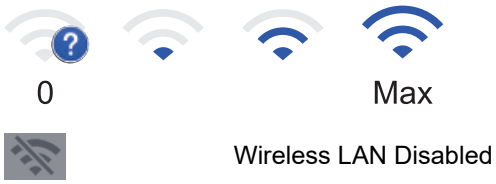

6. **[Shortcuts]**

   Press to access the [Shortcuts] screen.

7. **(Home screen)**

   Press to access the Home screens.

New Fax

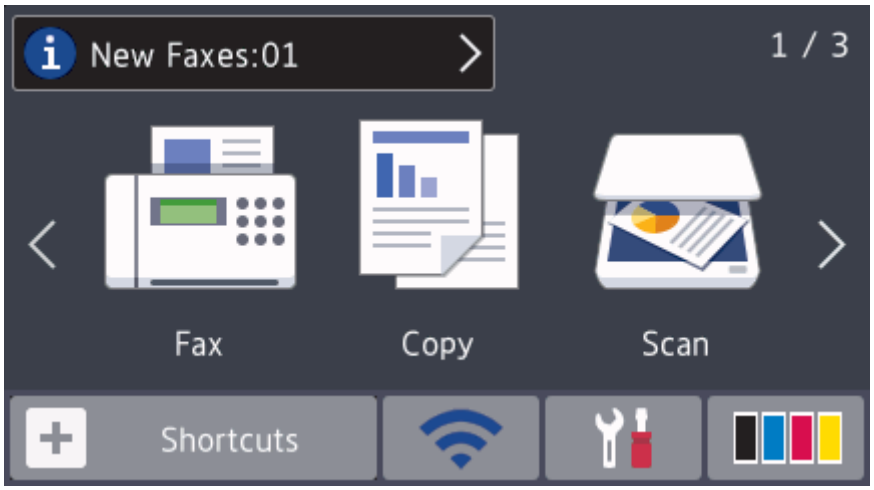

When [Fax Preview] is set to [On], the number of new faxes you received into the memory appears at the top of the screen.

Warning icon

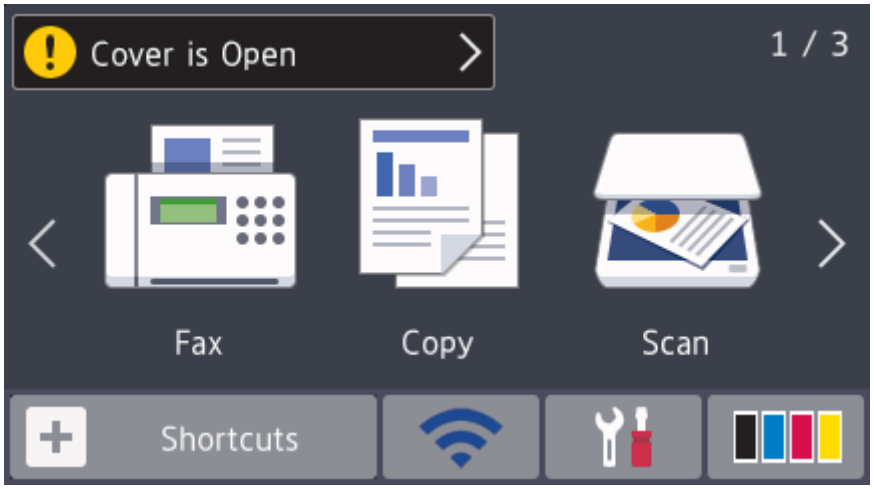

The warning icon appears when there is an error or maintenance message. Press the message area to view it, and then press to return to the Main Home screen.

NOTE

This product adopts the font of ARPHIC TECHNOLOGY CO.,LTD.

Related Information

- Introduction to Your Brother Machine

How to Navigate the Touchscreen LCD

Related Models: MFC-L3710CW/MFC-L3735CDN/MFC-L3745CDW/MFC-L3750CDW/MFC-L3770CDW

Press your finger on the LCD to operate it. To display and access all the options, swipe left, right, up, down or press ◀ ▶ or ▲ ▼ on the LCD to scroll through them.

The following steps explain how to change a machine setting. In this example, the LCD Backlight setting is changed from [Light] to [Med].

IMPORTANT

DO NOT press the LCD with a sharp object, such as a pen or stylus. It may damage the machine.

NOTE

DO NOT touch the LCD immediately after plugging in the power cord or turning on the machine. Doing this may cause an error.

1. Press [Settings].
2. Press [All Settings].
3. Swipe up or down or press ▲ or ▼ to display the [General Setup] option, and then press [General Setup].

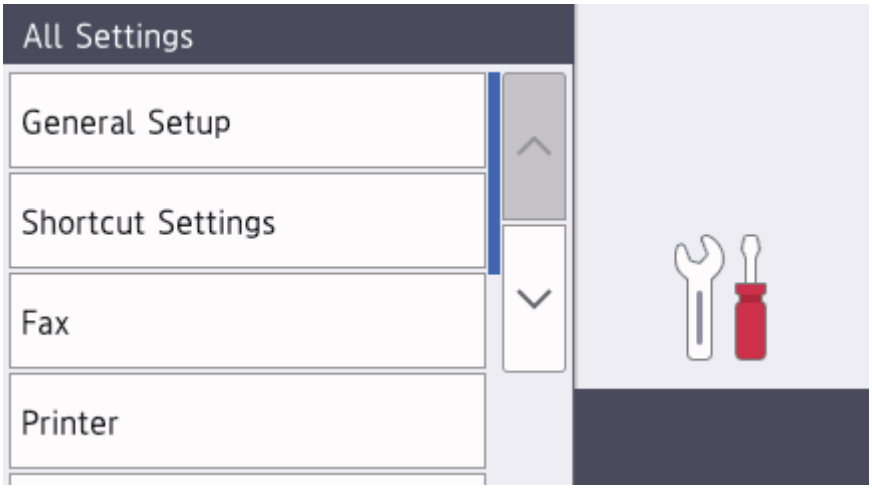

4. Swipe up or down or press ▲ or ▼ to display the [LCD Settings] option, and then press [LCD Settings].

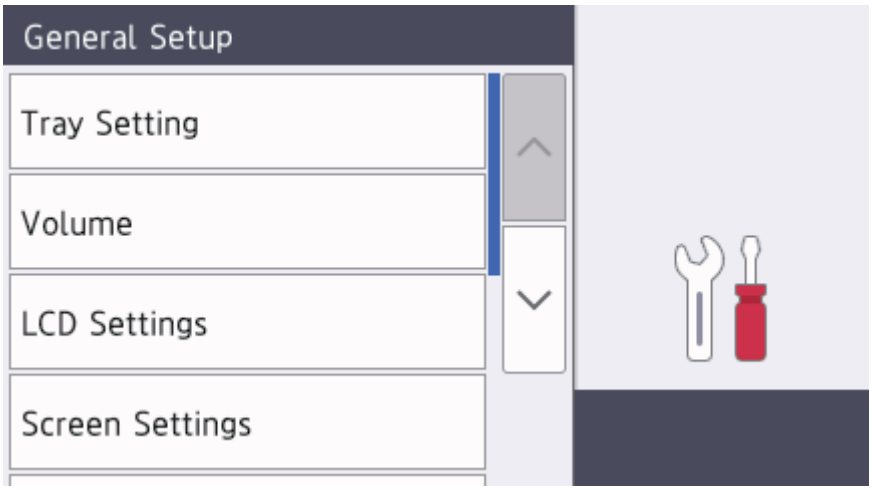

5. Press [Backlight].

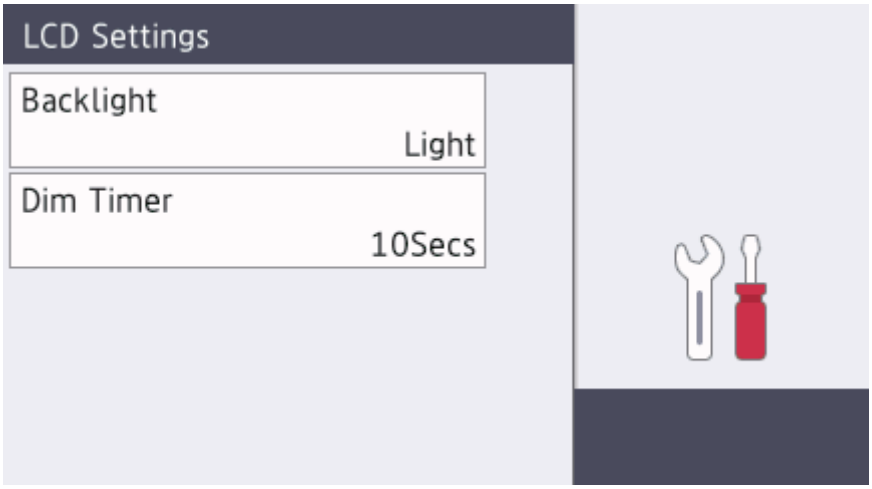

6. Press [Med].

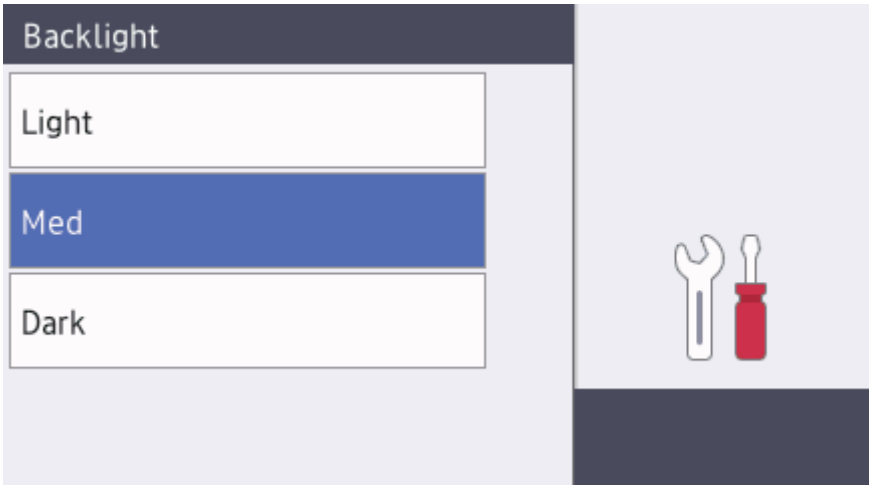

7. Press .

Related Information

- Introduction to Your Brother Machine

Settings Screen Overview

Related Models: MFC-L3710CW/MFC-L3735CDN/MFC-L3745CDW/MFC-L3750CDW/MFC-L3770CDW

Press to view the current machine status on the LCD.

Use the Settings menu to access all of your Brother machine's settings.

The available features vary depending on your model.

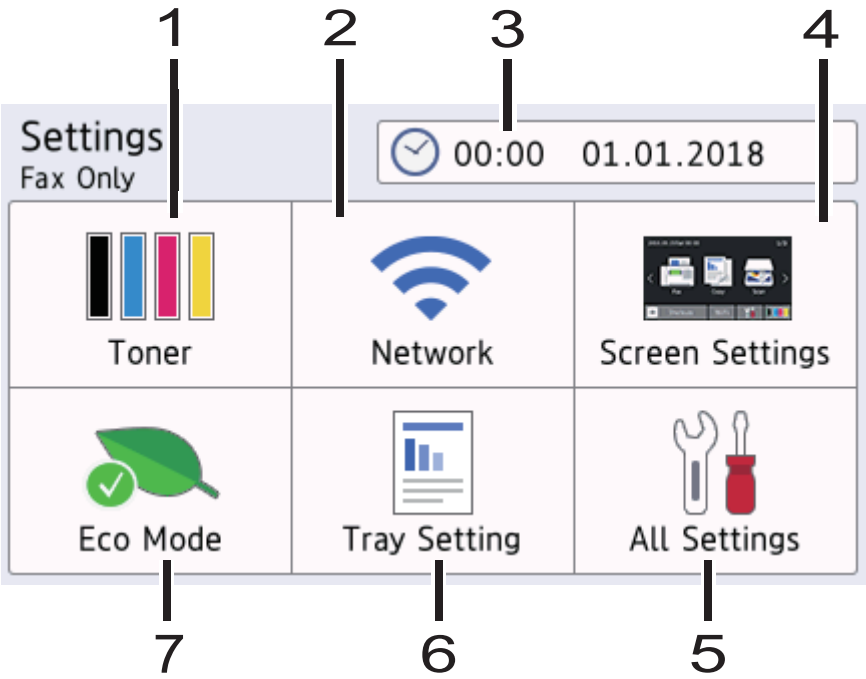

1. **Toner**
   - Displays the remaining toner life.
   - Press to access the `[Toner]` menu.
2. **Network**
   - Press to set up a network connection.
   - A four level indicator on the screen displays the current wireless signal strength if you are using a wireless connection.
3. **Date & Time**

   Displays the date and time set on the machine.

   Press to access the `[Date & Time]` menu.
4. **Screen Settings**

   Press to access the `[Screen Settings]` menu.
5. **All Settings**

   Press to access a menu of all machine settings.
6. **Tray Setting**

   Press to access the `[Tray Setting]` menu.
7. **Eco Mode**

   Press to access the `[Eco Mode]` menu.

Related Information

- Introduction to Your Brother Machine

Set the Main Home Screen

Related Models: MFC-L3710CW/MFC-L3735CDN/MFC-L3745CDW/MFC-L3750CDW/MFC-L3770CDW

You can change the LCD to display a specific Home screen or Shortcut screen.

When the machine is idle or you press , the touchscreen will return to the screen you set.

1. Press [Settings] > [Screen Settings] > [Main Home Screen].
2. Swipe up or down or press ▲ or ▼ to display the screen settings, and then press the setting you want.
3. Press .

   The machine will go to your chosen screen.

Related Information

- Introduction to Your Brother Machine

Access Brother Utilities (Windows)

Brother Utilities is an application launcher that offers convenient access to all Brother applications installed on your computer.

1. Do one of the following:
   - (Windows 7)

     Click **(Start)** > **All Programs** > **Brother** > **Brother Utilities**.
   - (Windows 8)

     Tap or click (**Brother Utilities**) either on the **Start** screen or the desktop.
   - (Windows 8.1)

     Move your mouse to the lower left corner of the **Start** screen and click (if you are using a touch-based device, swipe up from the bottom of the **Start** screen to bring up the **Apps** screen).

     When the **Apps** screen appears, tap or click (**Brother Utilities**).
   - (Windows 10)

     Click > **Brother** > **Brother Utilities**.
2. Select your machine (where XXXX is the name of your model).

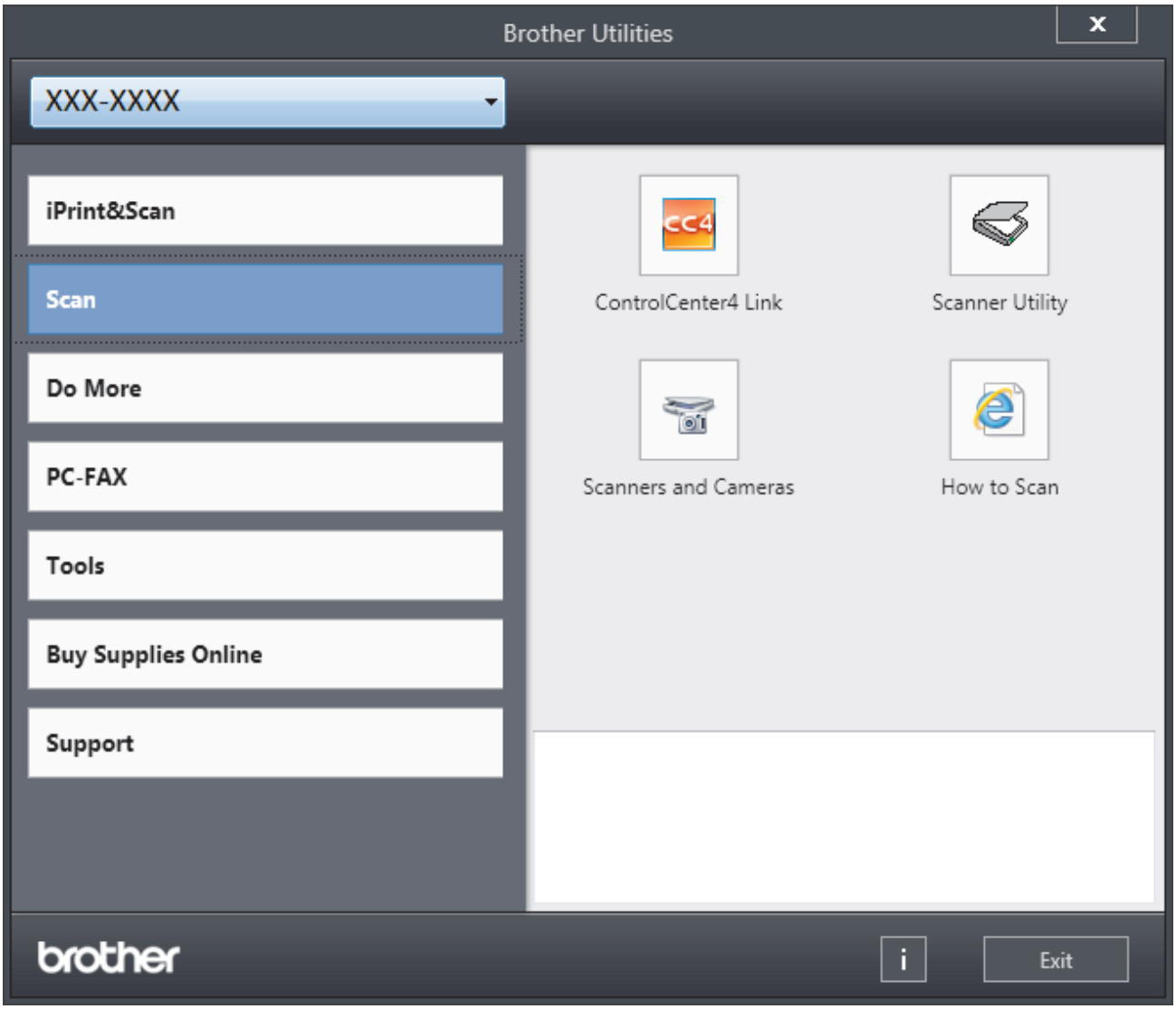

3. Choose the operation you want to use.

Related Information

- Introduction to Your Brother Machine
  - Uninstall the Brother Software and Drivers (Windows)

Uninstall the Brother Software and Drivers (Windows)

1. Do one of the following:
   - (Windows 7)

     Click **(Start)** > **All Programs** > **Brother** > **Brother Utilities**.
   - (Windows 8)

     Tap or click (**Brother Utilities**) either on the **Start** screen or the desktop.
   - (Windows 8.1)

     Move your mouse to the lower left corner of the **Start** screen and click (if you are using a touch-based device, swipe up from the bottom of the **Start** screen to bring up the **Apps** screen).

     When the **Apps** screen appears, tap or click (**Brother Utilities**).
   - (Windows 10)

     Click > **Brother** > **Brother Utilities**.
2. Click the drop-down list, and then select your model name (if not already selected). Click **Tools** in the left navigation bar, and then click **Uninstall**.

   Follow the instructions in the dialog box to uninstall the software and drivers.

Related Information

- Access Brother Utilities (Windows)

Input/Output Port Locations on Your Brother Machine

Input/Output ports are located on the back of the machine.

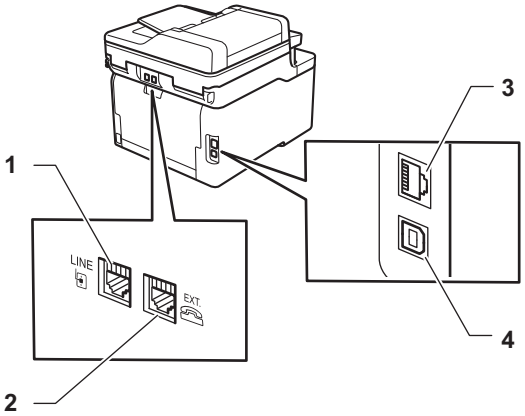

1. LINE jack (For MFC models)
2. EXT. jack (For MFC models)
3. LAN port (For Network models)
4. USB port

When connecting the USB or Ethernet cable, follow the instructions in the installation process.

To install the **Full Driver & Software Package** necessary for operating your machine, insert the Brother installation disc into your computer, or go to your model's **Downloads** page on the Brother Solutions Center at support.brother.com

Related Information

- Introduction to Your Brother Machine

Paper Handling

- Load Paper
- Paper Settings
- Load Documents
- Unscannable and Unprintable Areas
- Using Special Paper

Load Paper

- Load and Print Using the Paper Tray
- Load and Print Using the Multi-purpose Tray (MP Tray)
- Load and Print Paper in the Manual Feed Slot

Load and Print Using the Paper Tray

- Load Paper in the Paper Tray
- Printing Problems
- Error and Maintenance Messages

Load Paper in the Paper Tray

- If the Check Size setting is set to On and you pull the paper tray out of the machine, a message appears on the LCD asking if you want to change the paper size and paper type. Change the paper size and paper type settings if needed, following the LCD instructions.
- When you load a different size and type of paper in the tray, you must also change the Paper Size and Paper Type settings in the machine, or on your computer.

1. Pull the paper tray completely out of the machine.

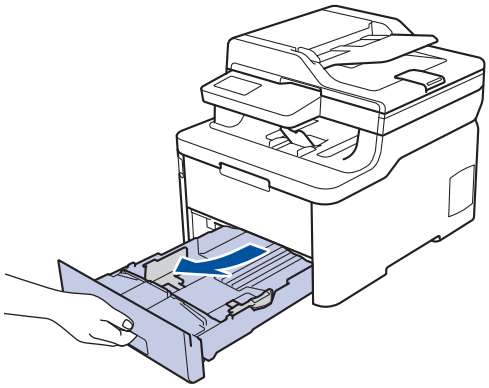

2. Press and slide the paper guides to fit the paper.

   Press the green release levers to slide the paper guides.

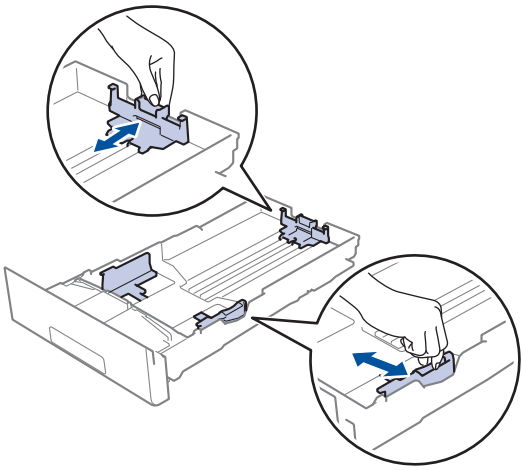

3. Fan the stack of paper well.
4. Load paper in the paper tray with the printing surface *face down*.

When you use preprinted paper, load the paper in the correct orientation. See *Related Information*: *Change Machine Settings to Print on Preprinted Paper in the Paper Tray.*

5. Make sure the paper is below the maximum paper mark (▼▼▼).

   Overfilling the paper tray will cause paper jams.

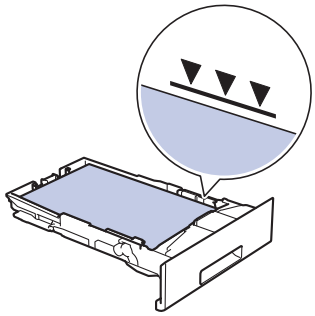

6. Slowly push the paper tray completely into the machine.
7. Lift the support flap to prevent paper from sliding off the output tray.

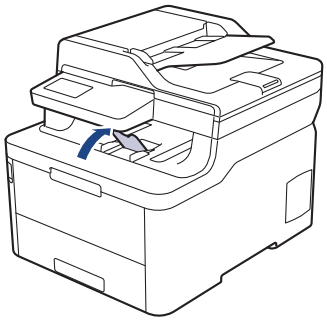

Related Information

- Load and Print Using the Paper Tray
  - Change Machine Settings to Print on Preprinted Paper in the Paper Tray

Change Machine Settings to Print on Preprinted Paper in the Paper Tray

Related Models: DCP-L3510CDW/DCP-L3551CDW/MFC-L3735CDN/MFC-L3745CDW/MFC-L3750CDW/MFC-L3770CDW

When you use preprinted paper for 2-sided printing, change the machine's settings.

DO NOT load different sizes and types of paper in the paper tray at the same time. Doing this may cause the paper to jam or misfeed.

Orientation

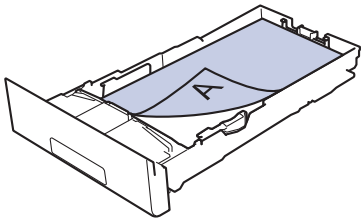	For 1-sided printing: • face down • top edge towards the front of the paper tray
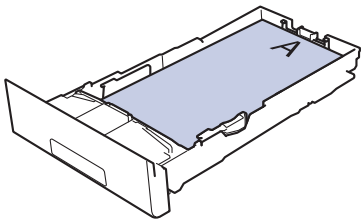	For automatic 2-sided printing (long edge binding): • face up • bottom edge towards the front of the paper tray

>> DCP-L3510CDW/DCP-L3551CDW
>> MFC-L3735CDN/MFC-L3745CDW/MFC-L3750CDW/MFC-L3770CDW

DCP-L3510CDW/DCP-L3551CDW

1. Press **Menu**.
2. Press ▲ or ▼ to select the following:
   a. Select `[Printer]`. Press **OK**.
   b. Select `[2-sided]`. Press **OK**.
   c. Select `[Single Image]`. Press **OK**.
   d. Select `[2-sided Feed]`. Press **OK**.
3. Press **Stop/Exit**.

MFC-L3735CDN/MFC-L3745CDW/MFC-L3750CDW/MFC-L3770CDW

1. Press `[Settings]` > `[All Settings]` > `[Printer]` > `[2-sided]` > `[Single Image]` > `[2-sided Feed]`.
2. Press .

Related Information

- Load Paper in the Paper Tray

Load and Print Using the Multi-purpose Tray (MP Tray)

You can load thin paper, thick paper, recycled paper, bond paper, glossy paper, labels, up to 30 sheets of plain paper, or up to three envelopes in the MP tray.

- Load Paper in the Multi-purpose Tray (MP Tray)
- Load and Print Labels Using the MP Tray
- Load and Print Envelopes Using the MP Tray
- Printing Problems
- Error and Maintenance Messages

Load Paper in the Multi-purpose Tray (MP Tray)

Related Models: MFC-L3770CDW

When you load a different size and type of paper in the tray, you must also change the Paper Size and Paper Type settings in the machine, or on your computer.

- Plain Paper
- Thin Paper
- Thick Paper
- Recycled Paper
- Bond Paper
- Glossy Paper

1. Lift the support flap to prevent paper from sliding off the face down output tray.

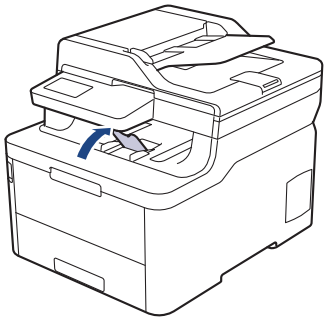

2. Open the MP tray and lower it gently.

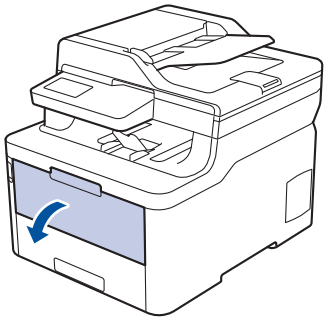

3. Pull out the MP tray support (1) and unfold the flap (2).

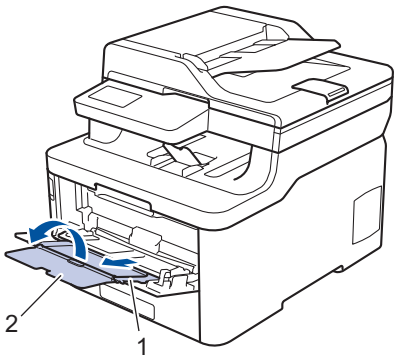

4. Slide the MP tray paper guides to fit the width of the paper you are using.

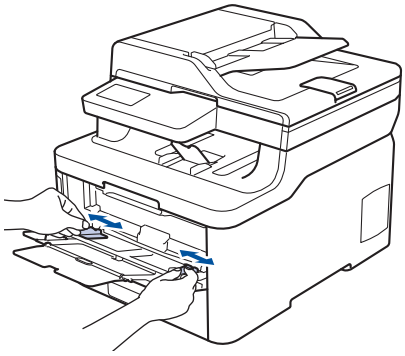

5. Load paper with the printing surface *face up* in the MP tray.

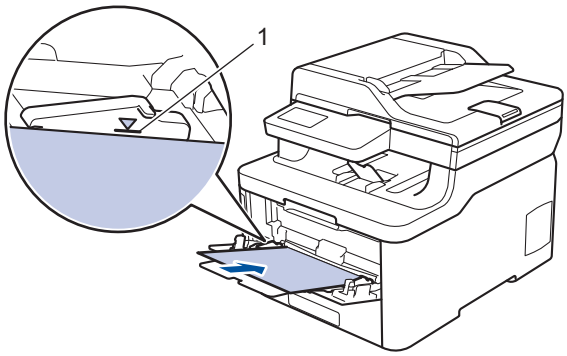

- Make sure the paper is below the maximum paper mark (1).
- When using glossy paper, load only one sheet at a time in the MP tray to avoid a paper jam.
- When you use preprinted paper, load the paper in the correct orientation. See *Related Information*: *Change Machine Settings to Print on Preprinted Paper in the MP Tray.*
- To remove a small printout from the output tray, use both hands to lift up the scanner cover as shown in the illustration.

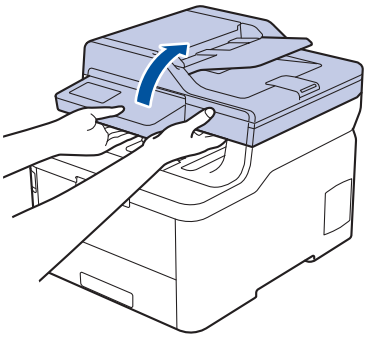

- You can still use the machine while the scanner cover is up. To close the scanner cover, gently push it down with both hands.

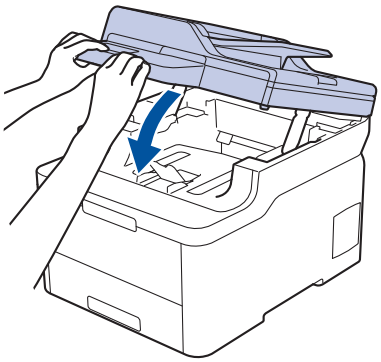

Related Information

- Load and Print Using the Multi-purpose Tray (MP Tray)

- Change Machine Settings to Print on Preprinted Paper in the MP Tray

Change Machine Settings to Print on Preprinted Paper in the MP Tray

Related Models: MFC-L3770CDW

When you use preprinted paper for 2-sided printing, change the machine's settings.

DO NOT load different sizes and types of paper in the paper tray at the same time. Doing this may cause the paper to jam or misfeed.

Orientation

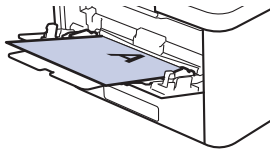	For 1-sided printing: • face up • top edge first
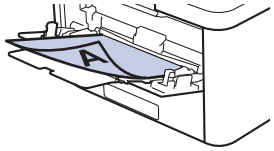	For automatic 2-sided printing (long edge binding): • face down • bottom edge first

1. Press [Settings] > [All Settings] > [Printer] > [2-sided] > [Single Image] > [2-sided Feed].
2. Press .

Related Information

- Load Paper in the Multi-purpose Tray (MP Tray)

Load and Print Labels Using the MP Tray

Related Models: MFC-L3770CDW

When the back cover (face up output tray) is pulled down, the machine has a straight paper path from the MP tray through to the back of the machine. Use this paper feed and output method when you print on labels.

When you load a different size and type of paper in the tray, you must also change the Paper Size and Paper Type settings in the machine, or on your computer.

1. Open the machine's back cover (the face up output tray).

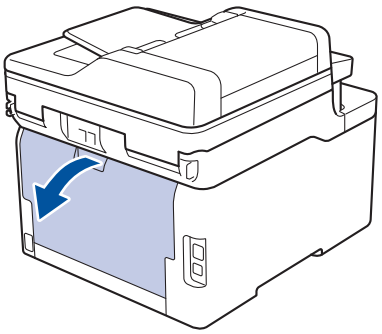

2. On the front of the machine, open the MP tray and lower it gently.

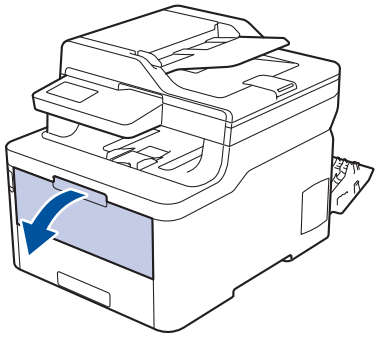

3. Pull out the MP tray support (1) and unfold the flap (2).

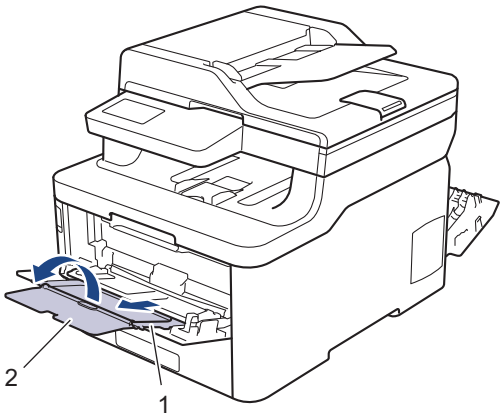

4. Slide the MP tray paper guides to fit the width of the paper you are using.
5. Load paper with the printing surface *face up* in the MP tray.

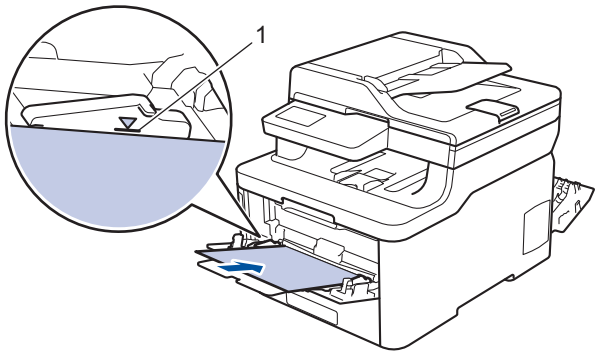

Make sure the paper is below the maximum paper mark (1).

6. Change your print preferences in the Print screen before sending the print job from your computer.
7. Send your print job to the machine.
8. Close the back cover (the face up output tray) until it locks in the closed position.

Related Information

- Load and Print Using the Multi-purpose Tray (MP Tray)

Load and Print Envelopes Using the MP Tray

Related Models: MFC-L3770CDW

You can load up to three envelopes in the MP tray.

Before loading, press the corners and sides of the envelopes to make them as flat as possible.

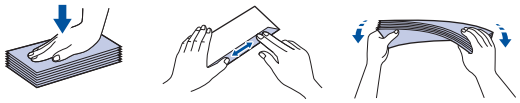

When you load a different size and type of paper in the tray, you must also change the Paper Size and Paper Type settings in the machine, or on your computer.

1. Open the machine's back cover (the face up output tray).

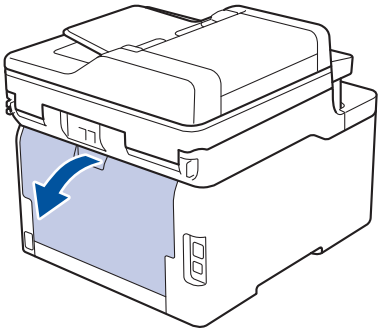

2. Pull down the two grey levers, one on the left side and one on the right side, as shown in the illustration.

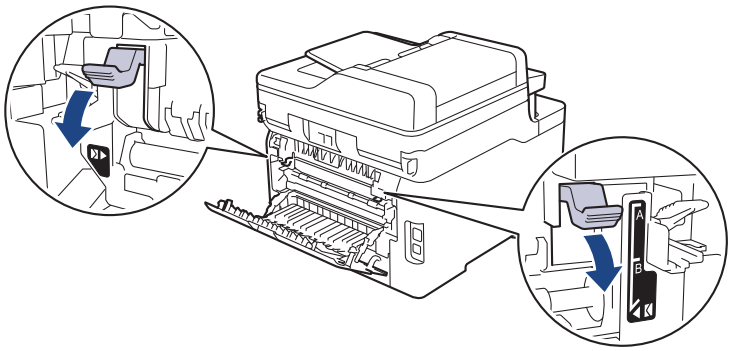

3. On the front of the machine, open the MP tray and lower it gently.

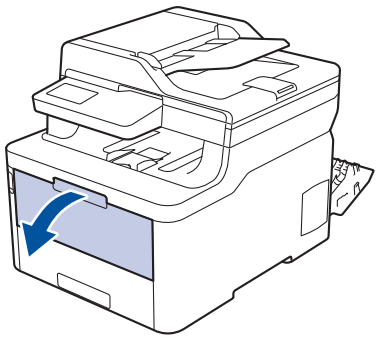

4. Pull out the MP tray support (1) and unfold the flap (2).

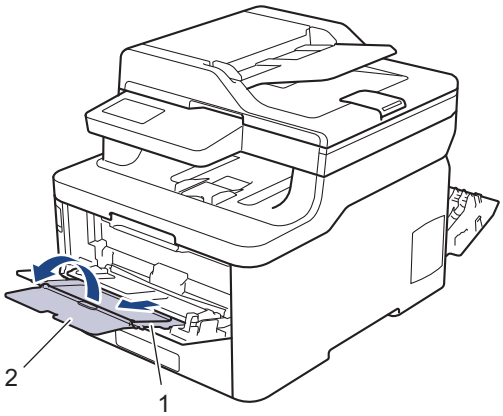

5. Slide the MP tray paper guides to fit the width of the envelopes that you are using.

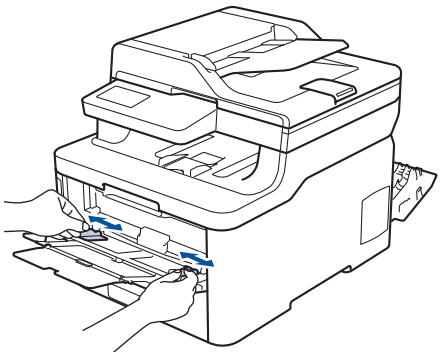

6. Load paper with the printing surface *face up* in the MP tray.

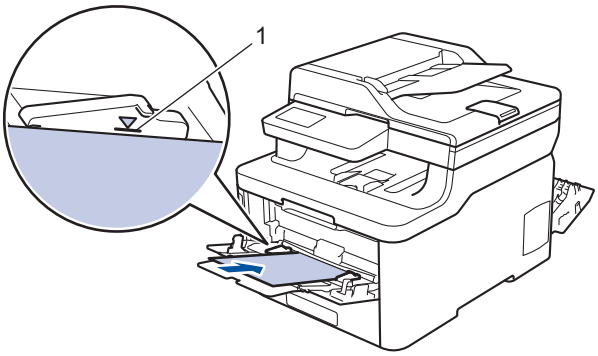

- Load up to three envelopes in the MP tray with the printing surface face up. Make sure the envelopes are below the maximum paper mark (1). Loading more than three envelopes may cause paper jams.

7. Change your print preferences in the Print dialog box before sending the print job from your computer.

Settings	Options for Envelopes
Paper Size	**Com-10** **DL** **C5** **Monarch**
Media Type	**Envelopes** **Env. Thick** **Env. Thin**

8. Send your print job to the machine.
9. When you have finished printing, return the two grey levers you adjusted in the earlier step back to their original positions.
10. Close the back cover (the face up output tray) until it locks in the closed position.

Related Information

- Load and Print Using the Multi-purpose Tray (MP Tray)

Load and Print Paper in the Manual Feed Slot

- Load and Print Paper in the Manual Feed Slot
- Load and Print on Labels in the Manual Feed Slot
- Load and Print on Envelopes in the Manual Feed Slot

Load and Print Paper in the Manual Feed Slot

Related Models: DCP-L3510CDW/DCP-L3551CDW/MFC-L3710CW/MFC-L3735CDN/MFC-L3745CDW/MFC-L3750CDW

When you load a different paper size in the tray, you must change the Paper Size setting in the machine or on your computer at the same time.

- Plain Paper
- Thin Paper
- Thick Paper
- Recycled Paper
- Bond Paper
- Glossy Paper

1. Lift the support flap to prevent paper from sliding off the face down output tray.

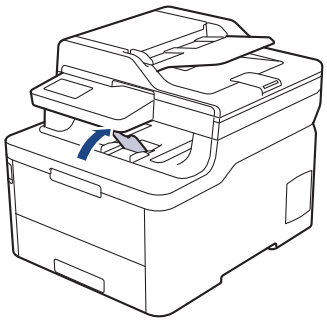

2. Open the manual feed slot cover.

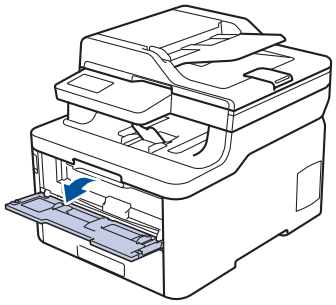

3. Use both hands to slide the manual feed slot paper guides to fit the width of the paper you are using.

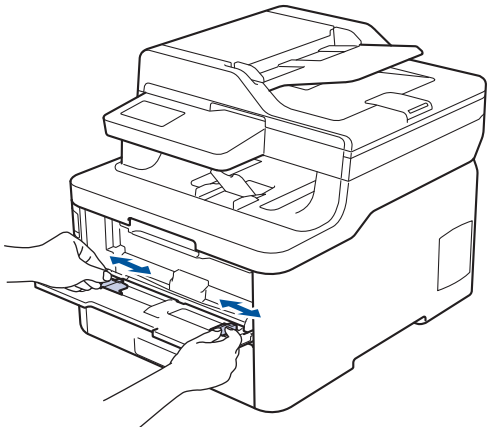

4. Using both hands, place one sheet of paper in the manual feed slot until the front edge touches the paper feed roller. When you feel the machine pull it in, let go.

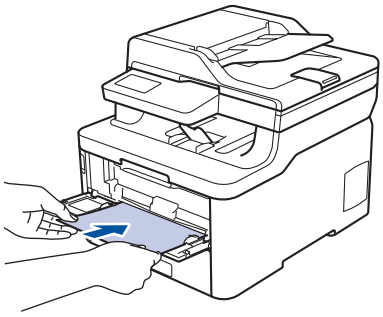

- Load paper into the manual feed slot with the printing surface facing up.
- Make sure the paper is straight and in the correct position in the manual feed slot. If it is not, the paper may not be fed correctly, resulting in a skewed printout or a paper jam.
- To remove a small printout from the output tray, use both hands to lift up the scanner cover.

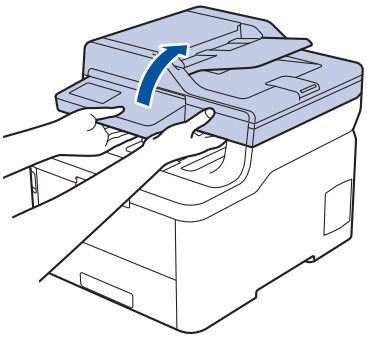

- You can still use the machine while the scanner cover is up. To close the scanner cover, gently push it down with both hands.

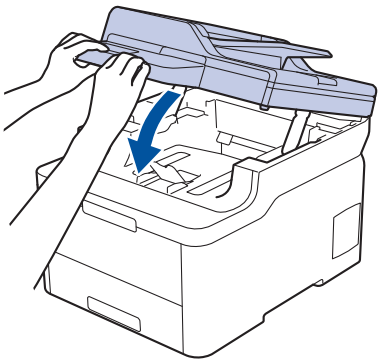

5. Send your print job to the machine.

Change your print preferences in the Print screen before sending the print job from your computer.

6. After the printed page comes out from the machine, load the next sheet of paper in the manual feed slot. Repeat for each page that you want to print.

Related Information

- Load and Print Paper in the Manual Feed Slot

Load and Print on Labels in the Manual Feed Slot

Related Models: DCP-L3510CDW/DCP-L3551CDW/MFC-L3710CW/MFC-L3735CDN/MFC-L3745CDW/MFC-L3750CDW

When you load a different paper size in the tray, you must change the Paper Size setting in the machine or on your computer at the same time.

1. Open the machine's back cover (the face up output tray).

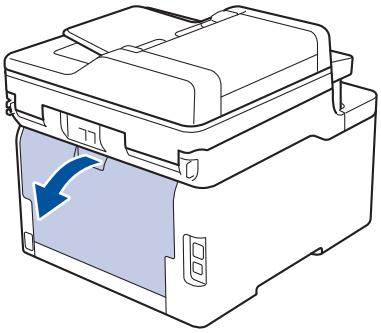

The machine automatically turns on Manual Feed mode when you load paper in the manual feed slot.

2. On the front of the machine, open the manual feed slot cover.

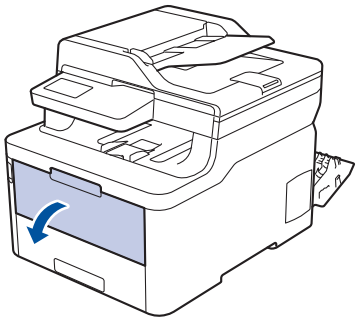

3. Use both hands to slide the manual feed slot paper guides to fit the width of the paper that you are using.

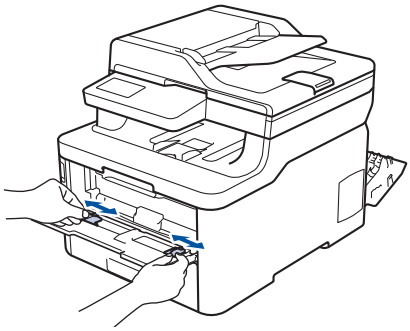

4. Using both hands, place one sheet of paper in the manual feed slot until the front edge touches the paper feed roller. When you feel the machine pull it in, let go.

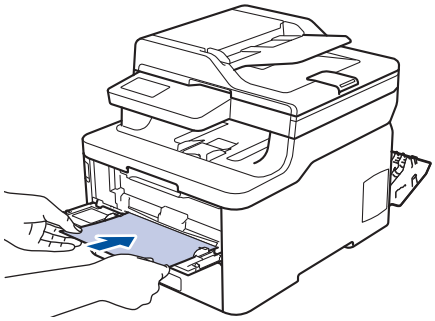

- Load paper into the manual feed slot with the printing surface facing up.
- Pull the paper out completely if you must reload the paper into the manual feed slot.
- Do not put more than one sheet of paper in the manual feed slot at one time, as it may cause a jam.
- Make sure the paper is straight and in the correct position in the manual feed slot. If it is not, the paper may not be fed correctly, resulting in a skewed printout or a paper jam.

5. Send your print job to the machine.

Change your print preferences in the Print screen before sending the print job from your computer.

6. After the printed page comes out from the back of the machine, load the next sheet of paper in the manual feed slot. Repeat for each page that you want to print.
7. Close the back cover (the face up output tray) until it locks in the closed position.

Related Information

- Load and Print Paper in the Manual Feed Slot

Load and Print on Envelopes in the Manual Feed Slot

Related Models: DCP-L3510CDW/DCP-L3551CDW/MFC-L3710CW/MFC-L3735CDN/MFC-L3745CDW/MFC-L3750CDW

When you load a different paper size in the tray, you must change the Paper Size setting in the machine or on your computer at the same time.

1. Open the machine's back cover (the face up output tray).

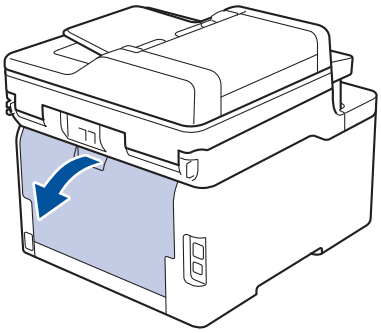

The machine automatically turns on Manual Feed mode when you load paper in the manual feed slot.

2. Pull down the two grey levers, one on the left side and one on the right side, as shown in the illustration.

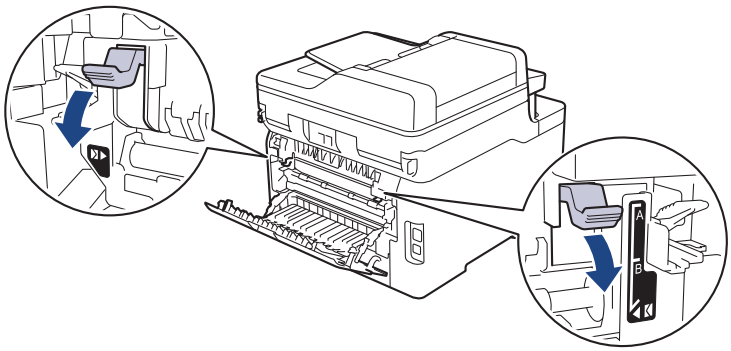

3. On the front of the machine, open the manual feed slot cover.

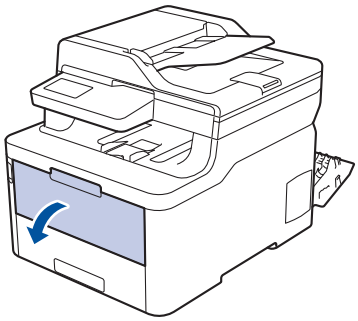

4. Use both hands to slide the manual feed slot paper guides to fit the width of the paper that you are using.

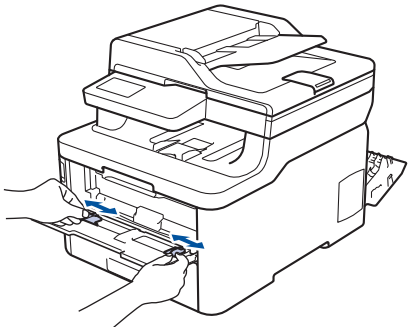

5. Using both hands, put one envelope in the manual feed slot until the front edge touches the paper feed roller. When you feel the machine pull it in, let go.

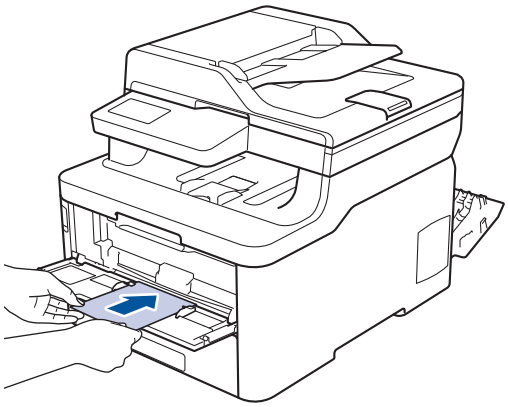

- Load the envelope into the manual feed slot with the printing surface facing up.
- Pull the envelope out completely when you reload the envelope into the manual feed slot.
- Do not put more than one envelope in the manual feed slot at one time, as it may cause a jam.
- Make sure the envelope is straight and in the correct position on the manual feed slot. If it is not, the envelope may not be fed correctly, resulting in a skewed printout or a paper jam.

6. Send your print job to the machine.

Change your print preferences in the Print dialog box before sending the print job from your computer.

Settings	Options for Envelopes
Paper Size	**Com-10** **DL** **C5** **Monarch**
Media Type	**Envelopes** **Env. Thick** **Env. Thin**

7. After the printed envelope comes out of the machine, put in the next envelope. Repeat for each envelope that you want to print.
8. When you have finished printing, return the two grey levers you adjusted in the earlier step back to their original positions.
9. Close the back cover (the face up output tray) until it locks in the closed position.

Related Information

- Load and Print Paper in the Manual Feed Slot

Paper Settings

- Change the Paper Size and Paper Type
- Select the Tray to Be Used For Printing
- Change the Check Paper Size Setting

Change the Paper Size and Paper Type

When you change the size and type of the paper you load in the tray, you must change the Paper Size and Paper Type settings on the LCD at the same time.

>> DCP-L3510CDW/DCP-L3551CDW
>> MFC-L3710CW/MFC-L3735CDN/MFC-L3745CDW/MFC-L3750CDW/MFC-L3770CDW

DCP-L3510CDW/DCP-L3551CDW

1. Press **Menu**.
2. Press ▲ or ▼ to display the [General Setup] option, and then press **OK**.
3. Press ▲ or ▼ to display the [Tray Setting] option, and then press **OK**.
4. Press ▲ or ▼ to display the [Paper Type] option, and then press **OK**.
5. Press ▲ or ▼ to display the [Thin Paper], [Plain Paper], [Thick Paper], or [Recycled Paper] option, and then press **OK**.
6. Press ▲ or ▼ to display the [Paper Size] option, and then press **OK**.
7. Press ▲ or ▼ to display the [A4], [Letter], [Legal], [Mexico Legal], [India Legal], [Executive], [A5], [A5(Long Edge)], [A6], [B5(JIS)], or [Folio] option, and then press **OK**.
8. Press **Stop/Exit**.

MFC-L3710CW/MFC-L3735CDN/MFC-L3745CDW/MFC-L3750CDW/MFC-L3770CDW

1. Press [Settings] > [All Settings] > [General Setup] > [Tray Setting] > [Paper Type].
2. Press the option you want.
3. Swipe up or down or press ▲ or ▼ to display the paper type options, and then press the option you want.
4. Press .
5. Press [Paper Size].
6. Press the option you want.
7. Swipe up or down or press ▲ or ▼ to display the paper size options, and then press the option you want.
8. Press .

Related Information

- Paper Settings

Select the Tray to Be Used For Printing

Related Models: MFC-L3770CDW

Change the default tray the machine will use for printing copies, received faxes, and print jobs from your computer.

DCP models do not support the fax feature.

1. Press [Settings] > [All Settings] > [General Setup] > [Tray Setting].
2. Swipe up or down or press ▲ or ▼ to display the [Tray Use: Copy], [Tray Use: Fax], or [Tray Use: Print] option, and then press the option you want.
3. Swipe up or down or press ▲ or ▼ to display the option you want, and then press it. For example, when you select the [MP>T1] option, the machine pulls paper from the MP tray until it is empty, and then from Tray 1.
4. Press .

- When you make a copy using the ADF and give priority to multiple trays, the machine looks for the tray with the most suitable paper and pulls paper from that tray.
- When you make a copy using the scanner glass, your document is copied from the higher priority tray even if more suitable paper is in another paper tray.
- (MFC models) Use the following sizes of paper for printing faxes: Letter, A4, Legal, Folio, Mexico Legal, or India Legal. When an appropriate size is not in any of the trays, the machine stores received faxes and [Size Mismatch] appears on the touchscreen.
- (MFC models) If the tray is out of paper and received faxes are in the machine's memory, [No Paper] appears on the touchscreen. Load paper in the empty tray.

Related Information

- Paper Settings

Change the Check Paper Size Setting

When you turn on your machine's Check Size setting, the machine displays a message when you remove a paper tray or load paper using the MP tray, asking if you changed the paper size and paper type.

The default setting is On.

>> DCP-L3510CDW/DCP-L3551CDW
>> MFC-L3710CW/MFC-L3735CDN/MFC-L3745CDW/MFC-L3750CDW/MFC-L3770CDW

DCP-L3510CDW/DCP-L3551CDW

1. Press **Menu**.
2. Press ▲ or ▼ to display the [General Setup] option, and then press **OK**.
3. Press ▲ or ▼ to display the [Tray Setting] option, and then press **OK**.
4. Press ▲ or ▼ to display the [Check Size] option, and then press **OK**.
5. Press ▲ or ▼ to select the [On] or [Off] option, and then press **OK**.
6. Press **Stop/Exit**.

MFC-L3710CW/MFC-L3735CDN/MFC-L3745CDW/MFC-L3750CDW/MFC-L3770CDW

1. Press [Settings] > [All Settings] > [General Setup] > [Tray Setting] > [Check Size].
2. Press [On] or [Off].
3. Press .

Related Information

- Paper Settings

Load Documents

You can send a fax, make copies and scan from the Automatic Document Feeder (ADF) and from the scanner glass.

- Load Documents in the Automatic Document Feeder (ADF)
- Load Documents on the Scanner Glass

Load Documents in the Automatic Document Feeder (ADF)

Related Models: DCP-L3551CDW/MFC-L3710CW/MFC-L3735CDN/MFC-L3745CDW/MFC-L3750CDW/MFC-L3770CDW

Use the ADF when copying or scanning multiple-page, standard-sized documents.

- The ADF can hold up to 50 pages and feed each sheet individually.
- Use standard 80 g/m^2 paper.
- Make sure documents with correction fluid or written in ink are completely dry.

IMPORTANT

- DO NOT leave thick documents on the scanner glass. If you do this, the ADF may jam.
- DO NOT use paper that is curled, wrinkled, folded, ripped, stapled, paper-clipped, pasted, or taped.
- DO NOT use cardboard, newspaper, or fabric.
- To avoid damaging your machine while using the ADF, DO NOT pull on the document while it is feeding.

Document Sizes Supported

Length:	147.3 mm to 355.6 mm
Width:	105 mm to 215.9 mm
Weight:	60 to 105 g/m^2

1. Unfold the ADF document output support flap.

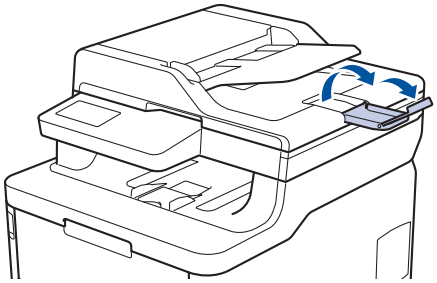

2. Fan the pages well.
3. Stagger the pages of your document and load it *face up* and *top edge first*, into the ADF as shown in the illustration.

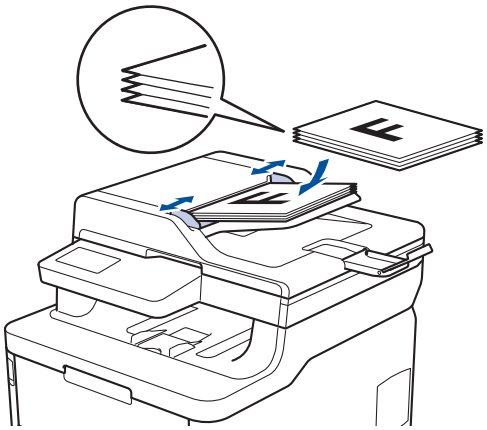

4. Adjust the paper guides to fit the width of your document.

Related Information

- Load Documents

Load Documents on the Scanner Glass

Use the scanner glass to fax, copy, or scan one page at a time.

Document Sizes Supported

Length:	Up to 300 mm
Width:	Up to 215.9 mm
Weight:	2 kg

To use the scanner glass, the ADF must be empty.

1. Lift the document cover.
2. Place the document on the scanner glass *face down*.

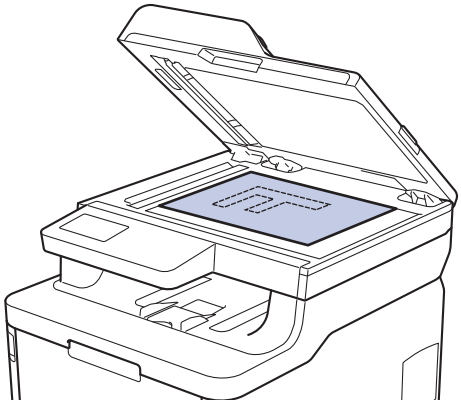

3. Place the corner of the page in the upper left corner of the scanner glass.

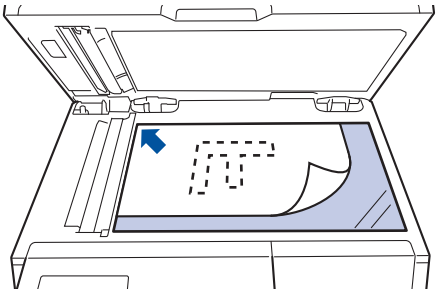

4. Close the document cover.
   If the document is a book or is thick, gently press on the document cover.

Related Information

- Load Documents

Unscannable and Unprintable Areas

The measurements in the table below show maximum unscannable and unprintable areas from the edges of the most commonly-used paper sizes. These measurements may vary depending on the paper size or settings in the application you are using.

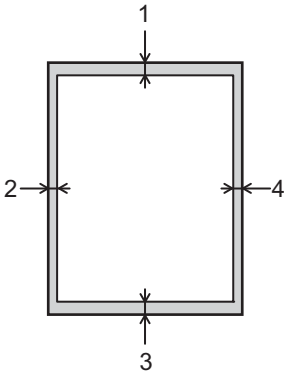

Do not attempt to scan, copy, or print into these areas; your output will not reflect anything in these areas.

Usage	Document Size	Top (1) Bottom (3)	Left (2) Right (4)
Fax (Sending)	Letter, Legal	3 mm	4 mm
	A4	3 mm	(ADF) 1 mm (Scanner Glass) 3 mm
Copy [1]	Letter, Legal	4 mm	4 mm
	A4	4 mm	3 mm
Scan	Letter	3 mm	3 mm
	A4	3 mm	3 mm
	Legal	3 mm	3 mm
Print	Letter, Legal	4.2 mm	4.2 mm
	A4	4.2 mm	4.2 mm

[1] a 1 in 1 copy and 100% document size copy

Related Information

- Paper Handling

Using Special Paper

Always test paper samples before purchasing them to ensure desirable performance.

- DO NOT use inkjet paper; it may cause a paper jam or damage your machine.
- If you use bond paper, paper with a rough surface, or paper that is wrinkled or creased, the paper may exhibit degraded performance.

Store paper in its original packaging and keep it sealed. Keep the paper flat and away from moisture, direct sunlight and heat.

IMPORTANT

Some types of paper may not perform well or may cause damage to your machine.

DO NOT use paper:

- that is highly textured
- that is extremely smooth or shiny
- that is curled or warped
- that is coated or has a chemical finish
- that is damaged, creased or folded
- that exceeds the recommended weight specification in this guide
- with tabs and staples
- with letterheads using low temperature dyes or thermography
- that is multipart or carbonless
- that is designed for inkjet printing

If you use any of the types of paper listed above, they may damage your machine. This damage is not covered under any Brother warranty or service agreement.

Related Information

- Paper Handling

Print

- Print from Your Computer (Windows)
- Print from Your Computer (Mac)
- Cancel a Print Job
- Test Print

Print from Your Computer (Windows)

- Print a Document (Windows)
- Print Settings (Windows)
- Secure Print (Windows)
- Change the Default Print Settings (Windows)
- Print a Document Using the BR-Script3 Printer Driver (PostScript® 3™ Language Emulation) (Windows)
- Monitor the Status of the Machine from Your Computer (Windows)

Print a Document (Windows)

1. Select the print command in your application.
2. Select **Brother XXX-XXXX** (where XXXX is the name of your model), and then click the printing properties or preferences button.

   The printer driver window appears.

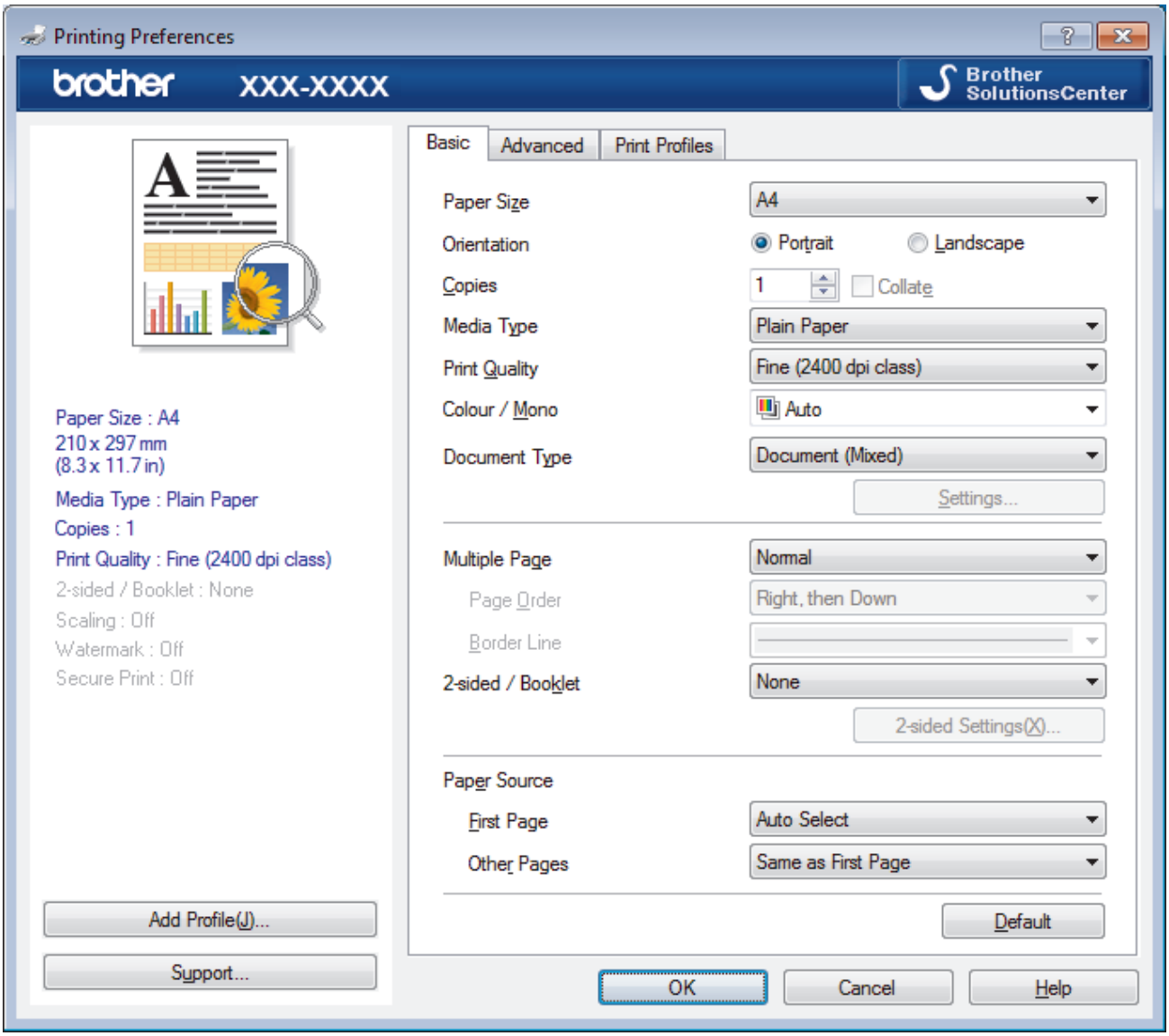

3. Make sure you have loaded the correct size paper in the paper tray.
4. Click the **Paper Size** drop-down list, and then select your paper size.
5. In the **Orientation** field, select the **Portrait** or **Landscape** option to set the orientation of your printout.

   If your application contains a similar setting, we recommend that you set the orientation using the application.

6. Type the number of copies (1-999) you want in the **Copies** field.
7. Click the **Media Type** drop-down list, and then select the type of paper you are using.
8. To print multiple pages on a single sheet of paper or print one page of your document on multiple sheets, click the **Multiple Page** drop-down list, and then select your options.
9. Change other printer settings, if needed.
10. Click **OK**.
11. Complete your print operation.

Related Information

- Print from Your Computer (Windows)

Related Topics:

- Print Settings (Windows)

Print Settings (Windows)

Basic Tab

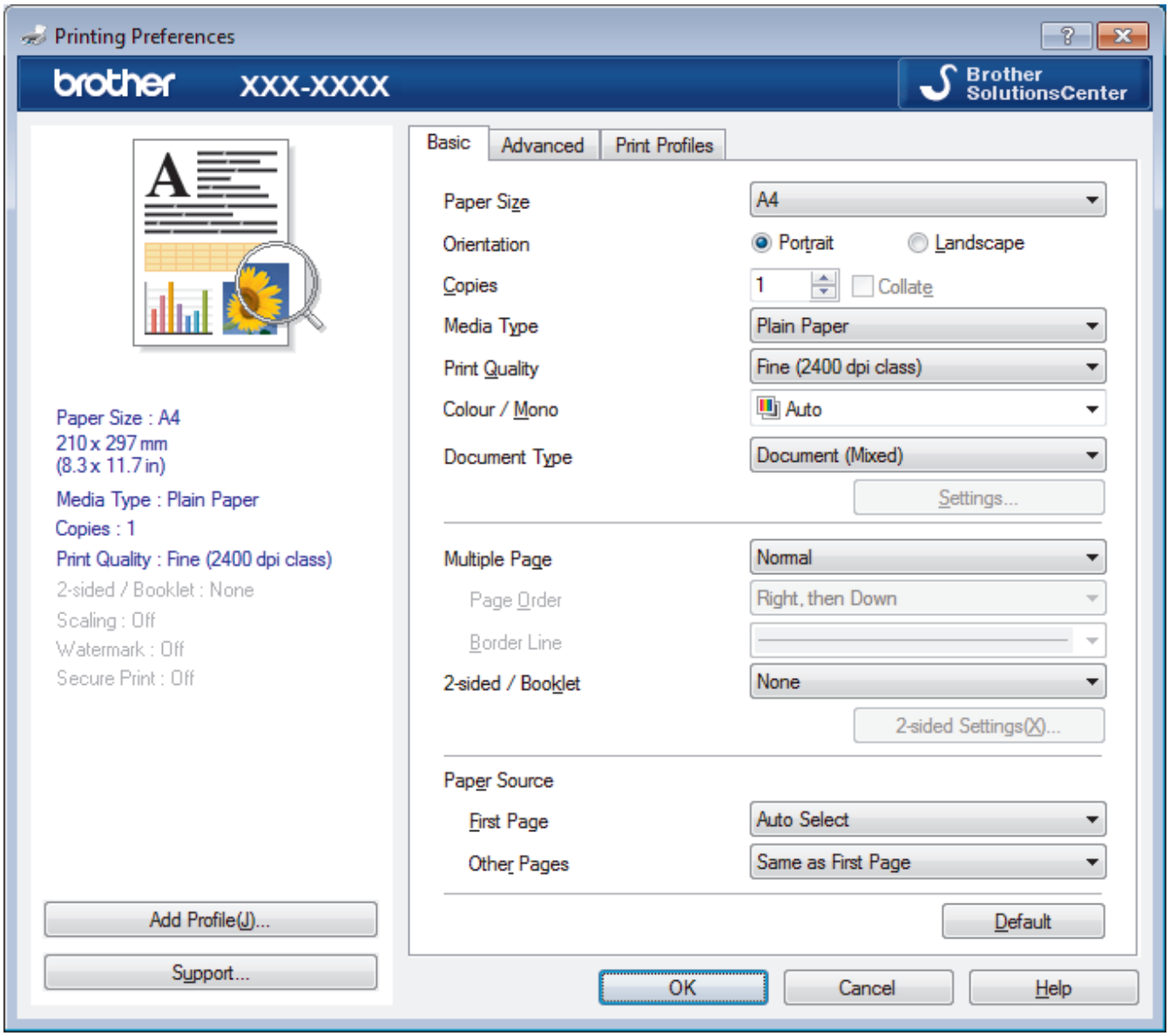

1. **Paper Size**

   Select the size of the paper you want to use. You can either choose from standard paper sizes or create a custom paper size.

2. **Orientation**

   Select the orientation (portrait or landscape) of your printout.

   If your application contains a similar setting, we recommend that you set the orientation using the application.

3. **Copies**

   Type the number of copies (1-999) that you want to print in this field.

   Collate

   Select this option to print sets of multi-page documents in the original page order. When this option is selected, one complete copy of your document will print, and then reprint according to the number of copies you choose. If this option is not selected, then each page will print according to the number of copies chosen before the next page of the document is printed.

4. **Media Type**

   Select the type of media you want to use. To achieve the best print results, the machine automatically adjusts its print settings according to the selected media type.

5. **Print Quality**

   Select the print resolution you want. Because print quality and speed are related, the higher the quality, the longer it will take to print the document.

6. **Color / Mono**

   Select the Colour/Mono settings to use.

NOTE

- The machine's colour sensor is very sensitive and may perceive faded black text or an off-white background as colour. If you know that your document is black and white and you want to conserve colour toner, select **Mono** mode.
- If either the Cyan, Magenta or Yellow toner reaches the end of its life while printing a colour document, the print job cannot be completed. Cancel your print job and select to start the print job again in **Mono** mode, as long as Black toner is available.

7. **Document Type**

   Select the type of document you want to print.

   Settings button

   Specify advanced settings, such as colour mode and other settings.

   Colour Mode

   Select the colour mode to suit your preference.

   Import

   To adjust the print configuration of a particular image, click **Settings**. When you have finished adjusting the image parameters, such as brightness and contrast, import those settings as a print configuration file. Use the **Export** option to create a print configuration file from the current settings.

   Export

   To adjust the print configuration of a particular image, click **Settings**. When you have finished adjusting the image parameters, such as brightness and contrast, export those settings as a print configuration file. Use the **Import** option to load a previously exported configuration file.

   Improve Gray Color

   Select this option to improve the image quality of shaded areas.

   Enhance Black Printing

   If a black graphic does not print correctly, select this setting.

   Improve Pattern Printing

   Select this option to improve the pattern printing if printed fills and patterns are different from the fills and patterns you see on your computer screen.

8. **Multiple Page**

   Select this option to print multiple pages on a single sheet of paper, or print one page of your document on multiple sheets.

   Page Order

   Select the page order when printing multiple pages on a single sheet of paper.

   Border Line

   Select the type of border to use when printing multiple pages on a single sheet of paper.

9. **2-sided / Booklet (Available only for certain models)**

   Select this option to print on both sides of the paper, or print a document in booklet format using 2-sided printing.

2-sided Settings button

Click this button to select the type of 2-sided binding. Four types of 2-sided bindings are available for each orientation.

10. Paper Source

Select the paper source setting according to your print conditions or purpose.

First Page

Select the paper source to use for printing the first page.

Other Pages

Select the paper source to use for printing the second and subsequent pages.

Advanced Tab

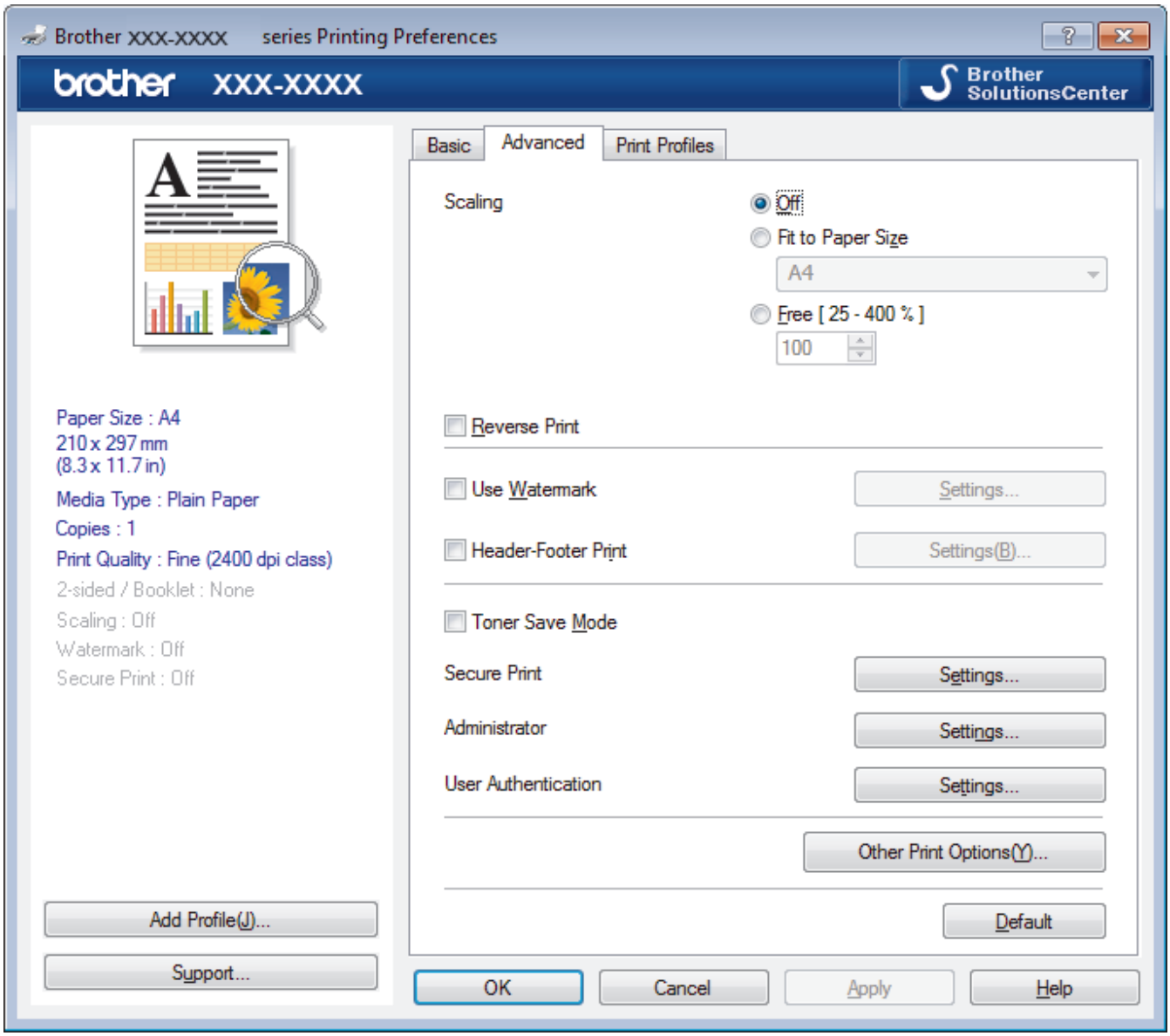

1. Scaling

Select these options to enlarge or reduce the size of the pages in your document.

Fit to Paper Size

Select this option to enlarge or reduce the document pages to fit a specified paper size. When you select this option, select the paper size you want from the drop-down list.

Free

Select this option to enlarge or reduce the document pages manually. When you select this option, type a value into the field.

2. **Reverse Print**

   Select this option to rotate the printed image 180 degrees.

3. **Use Watermark**

   Select this option to print a logo or text on your document as a watermark. Select one of the preset watermarks, add a new watermark, or use an image file you have created.

4. **Header-Footer Print**

   Select this option to print the date, time and PC login user name on the document.

5. **Toner Save Mode**

   Select this feature to conserve toner by using less toner to print documents; printouts appear lighter, but are still legible.

6. **Secure Print**

   This feature ensures that confidential or sensitive documents do not print until you enter a password on the machine's control panel.

7. **Administrator**

   This feature allows you to change the administrator password and restrict various printing functions.

8. **User Authentication**

   This feature allows you to confirm the restrictions for each user.

9. **Other Print Options button**

   Sleep Time

   Select this option to set the machine to enter sleep mode immediately after printing.

   Improve Print Output

   Select this option to reduce the amount of paper curling and improve the toner fixing.

   Skip Blank Page

   Select this option to allow the printer driver to automatically detect blank pages and exclude them from printing.

   TrueType Mode

   Mode

   Select how the fonts are processed for printing.

   Use Printer TrueType Fonts(Available only for certain models)

   Select whether to use built-in fonts for the font processing.

   Eco settings

   Select this option to reduce printing noise.

Related Information

- Print from Your Computer (Windows)

Related Topics:

- Print a Document (Windows)

Secure Print (Windows)

Use Secure Print to ensure that confidential or sensitive documents do not print until you enter a password on the machine's control panel.

- The secure data is deleted from the machine when you turn off the machine.

>> DCP-L3510CDW/DCP-L3551CDW
>> MFC-L3710CW/MFC-L3735CDN/MFC-L3745CDW/MFC-L3750CDW/MFC-L3770CDW

DCP-L3510CDW/DCP-L3551CDW

1. Select the print command in your application.
2. Select **Brother XXX-XXXX** (where XXXX is the name of your model), and then click the printing properties or preferences button.

   The printer driver window appears.
3. Click the **Advanced** tab.
4. Click the **Settings** button in the **Secure Print** field.
5. Select the **Secure Print** check box.
6. Type your four-digit password in the **Password** field.

   You must set a separate password for each document.
7. Type the **User Name** and **Job Name** in the text field, if needed.
8. Click **OK**, to close the **Secure Print Settings** window.
9. Click **OK**.
10. Complete your print operation.
11. On the machine's control panel, press **Menu**.
12. Press ▲ or ▼ to display the `[Secure Print]` option, and then press **OK**.
13. Press ▲ or ▼ to display your user name, and then press **OK**.

    The LCD displays the list of secured jobs for your name.
14. Press ▲ or ▼ to display the print job, and then press **OK**.
15. Enter your four-digit password, and then press **OK**.
16. Press ▲ or ▼ to select the `[Print]` option, and then press **OK**.
17. Press ▲ or ▼ to enter the number of copies you want.
18. Press **OK**.

    The machine prints the data.

After you have printed the secured data, it will be cleared from the machine's memory.

MFC-L3710CW/MFC-L3735CDN/MFC-L3745CDW/MFC-L3750CDW/MFC-L3770CDW

1. Select the print command in your application.
2. Select **Brother XXX-XXXX** (where XXXX is the name of your model), and then click the printing properties or preferences button.

   The printer driver window appears.
3. Click the **Advanced** tab.
4. Click the **Settings** button in the **Secure Print** field.
5. Select the **Secure Print** check box.
6. Type your four-digit password in the **Password** field.

You must set a separate password for each document.

7. Type the **User Name** and **Job Name** in the text field, if needed.
8. Click **OK**, to close the **Secure Print Settings** window.
9. Click **OK**.
10. Complete your print operation.
11. On the machine's control panel, swipe left or right or press ◀ or ▶ to display the `[Secure Print]` option, and then press `[Secure Print]`.
12. Swipe up or down or press ▲ or ▼ to display user names, and then press your user name.

    The LCD displays the list of secured jobs for your name.
13. Swipe up or down or press ▲ or ▼ to display the print job, and then press it.
14. Enter your four-digit password, and then press `[OK]`.
15. Enter the number of copies you want.
16. Press `[Start]`.

    The machine prints the data.

After you have printed the secured data, it will be cleared from the machine's memory.

Related Information

- Print from Your Computer (Windows)

Change the Default Print Settings (Windows)

When you change an application's print settings, the changes only apply to documents printed with that application. To change print settings for all Windows applications, you must configure the printer driver properties.

1. Do one of the following:
   - For Windows Server 2008

     Click **(Start)** > **Control Panel** > **Hardware and Sound** > **Printers**.
   - For Windows 7 and Windows Server 2008 R2

     Click **(Start)** > **Devices and Printers**.
   - For Windows 8

     Move your mouse to the lower right corner of your desktop. When the menu bar appears, click **Settings**, and then click **Control Panel**. In the **Hardware and Sound** group, click **View devices and printers**.
   - For Windows 10 and Windows Server 2016

     Click > **Windows System** > **Control Panel**. In the **Hardware and Sound** group, click **View devices and printers**.
   - For Windows Server 2012

     Move your mouse to the lower right corner of your desktop. When the menu bar appears, click **Settings**, and then click **Control Panel**. In the **Hardware** group, click **View devices and printers**.
   - For Windows Server 2012 R2

     Click **Control Panel** on the **Start** screen. In the **Hardware** group, click **View devices and printers**.
2. Right-click the **Brother XXX-XXXX** icon (where XXXX is your model name), and then select **Printer properties**. If printer driver options appear, select your printer driver.
3. Click the **General** tab, and then click the **Printing Preferences...** or **Preferences...** button.

   The printer driver dialog box appears.

   - To configure the tray settings, click the **Device Settings** tab(Available only for certain models).
   - To change the printer port, click the **Ports** tab.
4. Select the print settings you want to use as defaults for all of your Windows programs.
5. Click **OK**.
6. Close the printer properties dialog box.

Related Information

- Print from Your Computer (Windows)

Print a Document Using the BR-Script3 Printer Driver (PostScript® 3™ Language Emulation) (Windows)

The BR-Script3 printer driver lets you print PostScript® data more clearly.

To install the PS driver (BR-Script3 printer driver), launch the Brother installation disc, select **Custom** in the Select Machine section, and then select the **PS Driver** check box.

1. Select the print command in your application.
2. Select **Brother XXX-XXXX BR-Script3** (where XXXX is the name of your model), and then click the printing properties or preferences button.

   The printer driver window appears.

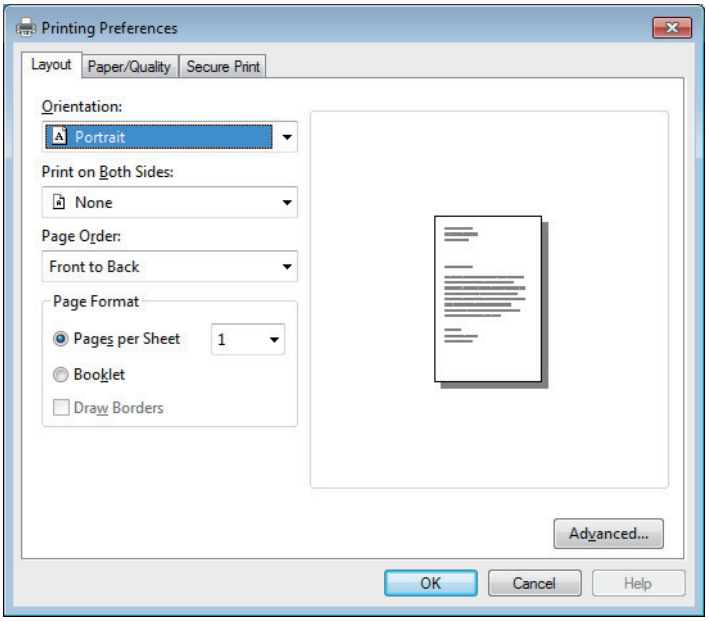

3. Click the **Layout**, **Paper/Quality**, or **Secure Print** tab to change basic print settings. (Available only for certain models)

   Click the **Layout** or **Paper/Quality** tab, and then click the **Advanced…** button to change advanced print settings.
4. Click **OK**.
5. Complete your print operation.

Related Information

- Print from Your Computer (Windows)

Monitor the Status of the Machine from Your Computer (Windows)

The Status Monitor utility is a configurable software tool for monitoring the status of one or more devices, allowing you to get immediate notification of errors.

- Do one of the following:
  - Double-click the icon in the task tray.
  - (Windows 7)

    Click **(Start)** > **All Programs** > **Brother** > **Brother Utilities**.

    Click the drop-down list and select your model name (if not already selected). Click **Tools** in the left navigation bar, and then click **Status Monitor**.
  - (Windows 8)

    Click (**Brother Utilities**), and then click the drop-down list and select your model name (if not already selected). Click **Tools** in the left navigation bar, and then click **Status Monitor**.
  - (Windows 8.1)

    Move your mouse to the lower left corner of the **Start** screen and click (if you are using a touch-based device, swipe up from bottom of the **Start** screen to bring up the **Apps** screen). When the **Apps** screen appears, tap or click (**Brother Utilities**), and then click the drop-down list and select your model name (if not already selected). Click **Tools** in the left navigation bar, and then click **Status Monitor**.
  - (Windows 10)

    Click > **Brother** > **Brother Utilities**.

    Click the drop-down list and select your model name (if not already selected). Click **Tools** in the left navigation bar, and then click **Status Monitor**.

Troubleshooting

Click the **Troubleshooting** button to access the troubleshooting website.

Looking for replacement supplies?

Click the **Looking for replacement supplies?** button for more information on Brother genuine supplies.

Related Information

- Print from Your Computer (Windows)

Related Topics:

- Printing Problems
- Calibrate Colour Output

Print from Your Computer (Mac)

- Print a Document (Mac)
- Print Options (Mac)
- Secure Print (Mac)
- Print a Document Using the BR-Script3 Printer Driver (PostScript® 3™ language emulation) (Mac)
- Monitor the Status of the Machine from Your Computer (Mac)

Print a Document (Mac)

1. Make sure you have loaded the correct size paper in the paper tray.
2. From an application, such as Apple TextEdit, click the **File** menu, and then select **Print**.
3. Select **Brother XXX-XXXX** (where XXXX is your model name).
4. Type the number of copies you want in the **Copies** field.
5. Click the **Paper Size** pop-up menu, and then select your paper size.
6. Select the **Orientation** option that matches the way you want the document to print.
7. Click the application pop-up menu, and then select **Print Settings**.
   The **Print Settings** options appear.
8. Click the **Media Type** pop-up menu, and then select the type of paper you are using.
9. Change other printer settings, if needed.
10. Click **Print**.

Related Information

- Print from Your Computer (Mac)

Related Topics:

- Print Options (Mac)

Print Options (Mac)

Page Setup

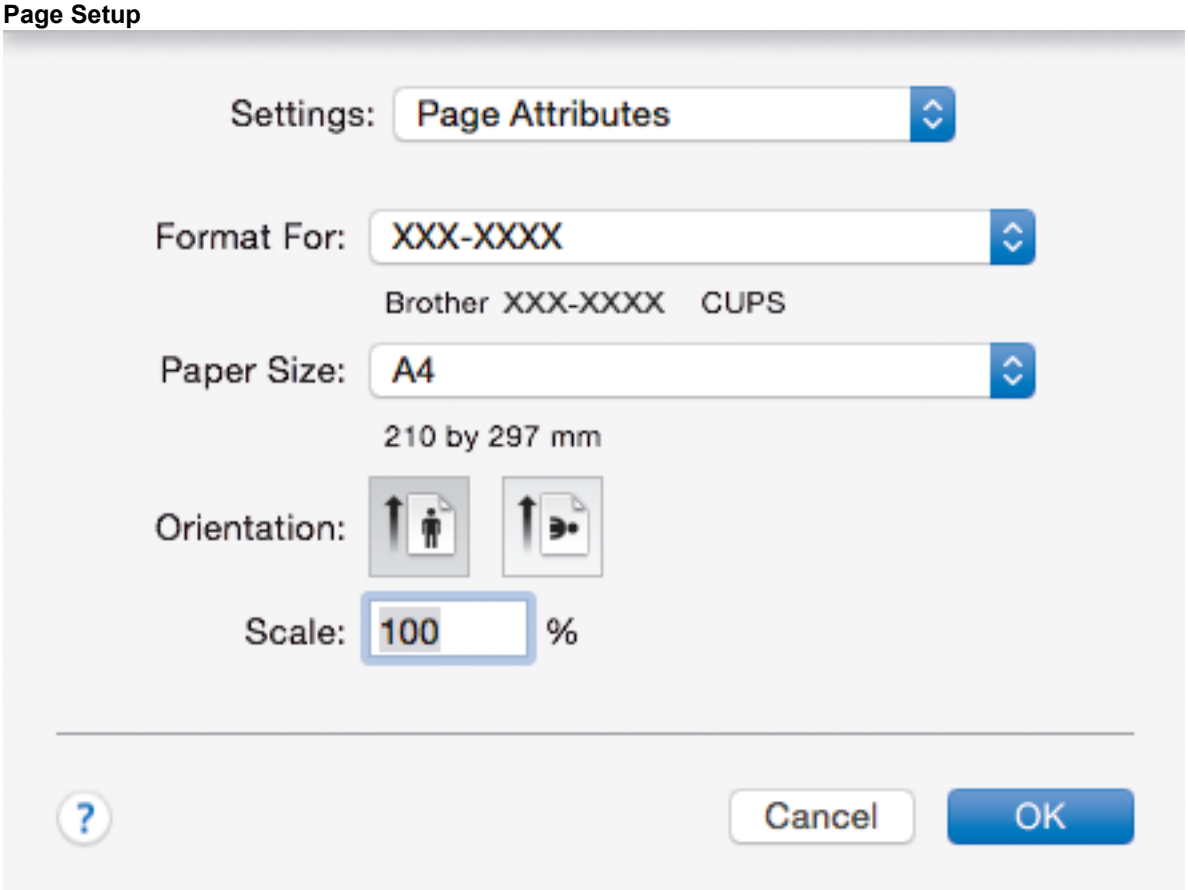

1. **Paper Size**

   Select the size of the paper you want to use. You can either choose from standard paper sizes or create a custom paper size.

2. **Orientation**

   Select the orientation (portrait or landscape) of your printout.

   If your application contains a similar setting, we recommend that you set the orientation using the application.

3. **Scale**

   Type a value into the field to enlarge or reduce the pages in your document to fit the selected paper size.

Layout

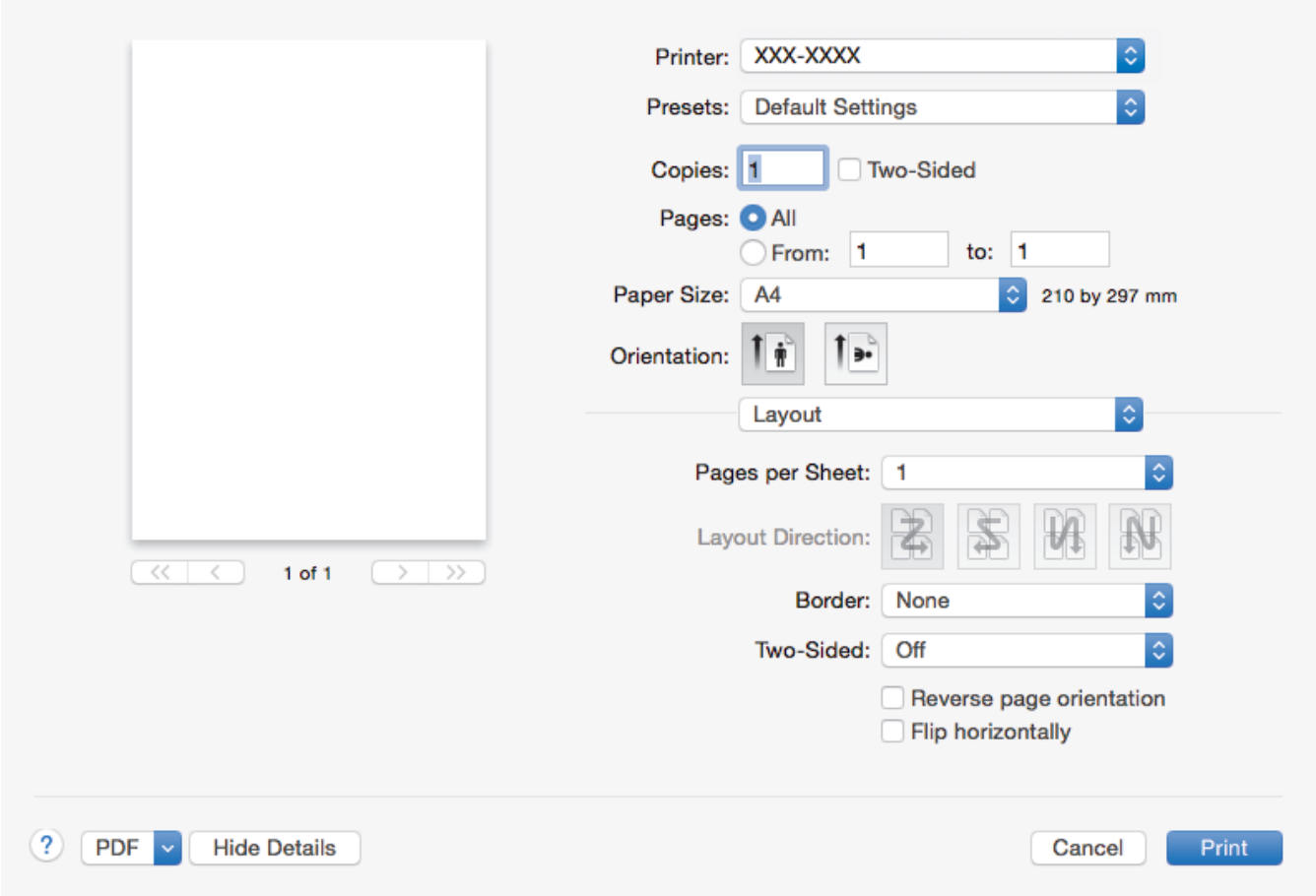

1. **Pages per Sheet**

   Select the number of pages to print on a single sheet of paper.
2. **Layout Direction**

   Select the page order when printing multiple pages on a single sheet of paper.
3. **Border**

   Select the type of border to use when printing multiple pages on a single sheet of paper.
4. **Two-Sided (Available only for certain models)**

   Select whether to print on both sides of the paper.
5. **Reverse page orientation**

   Select this option to rotate the printed image 180 degrees.
6. **Flip horizontally**

   Select this option to reverse the printed image on the page horizontally from left to right.

Paper Handling

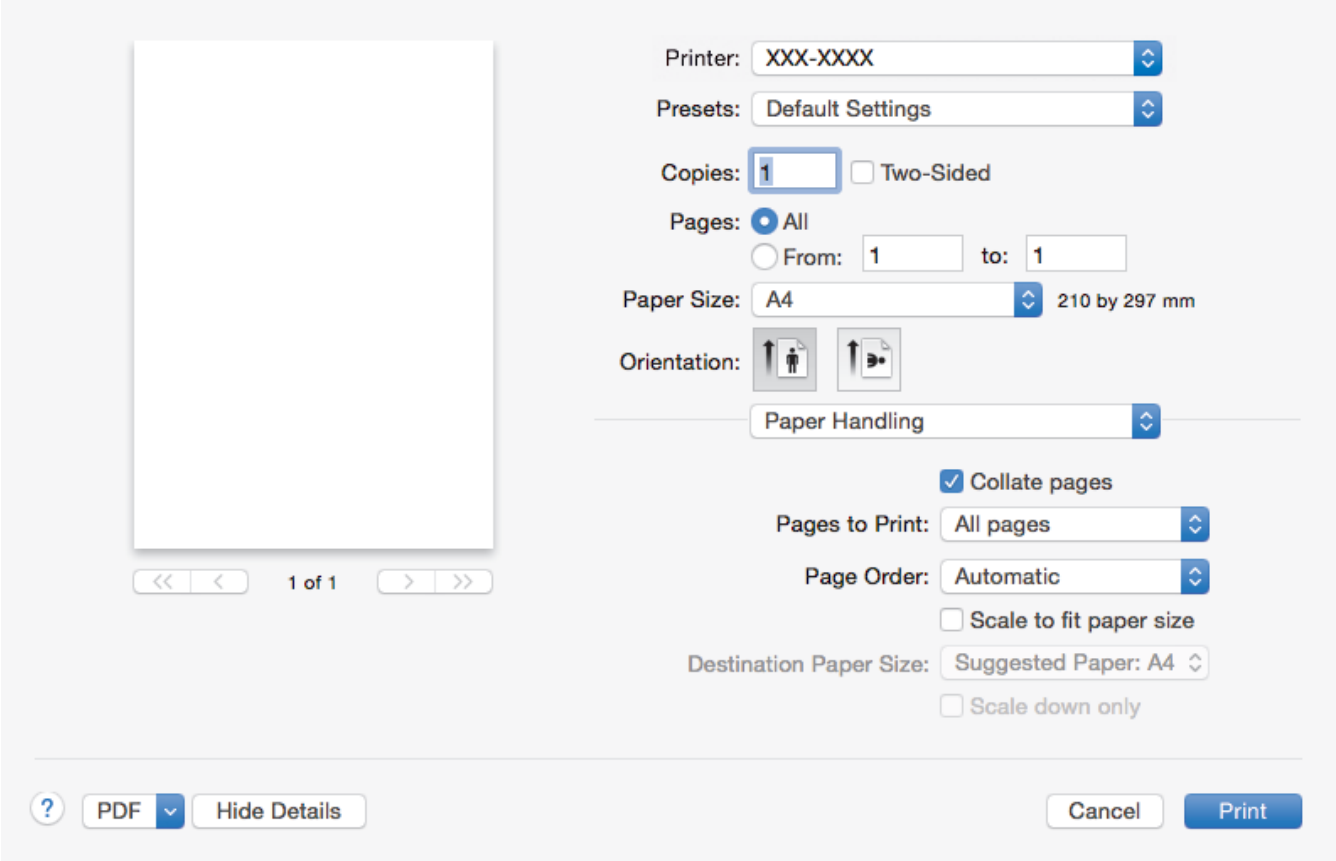

1. **Collate pages**

   Select this option to print sets of multi-page documents in the original page order. When this option is selected, one complete copy of your document will print, and then reprint according to the number of copies you choose. If this option is not selected, then each page will print according to the number of copies chosen before the next page of the document is printed.

2. **Pages to Print**

   Select which pages you want to print (even pages or odd pages).

3. **Page Order**

   Select the page order.

4. **Scale to fit paper size**

   Select this option to enlarge or reduce the pages in your document to fit the selected paper size.

5. **Destination Paper Size**

   Select the paper size to print on.

6. **Scale down only**

   Select this option if you want to reduce the pages in your document when they are too large for the selected paper size. If this option is selected and the document is formatted for a paper size that is smaller than the paper size you are using, the document will be printed at its original size.

Print Settings

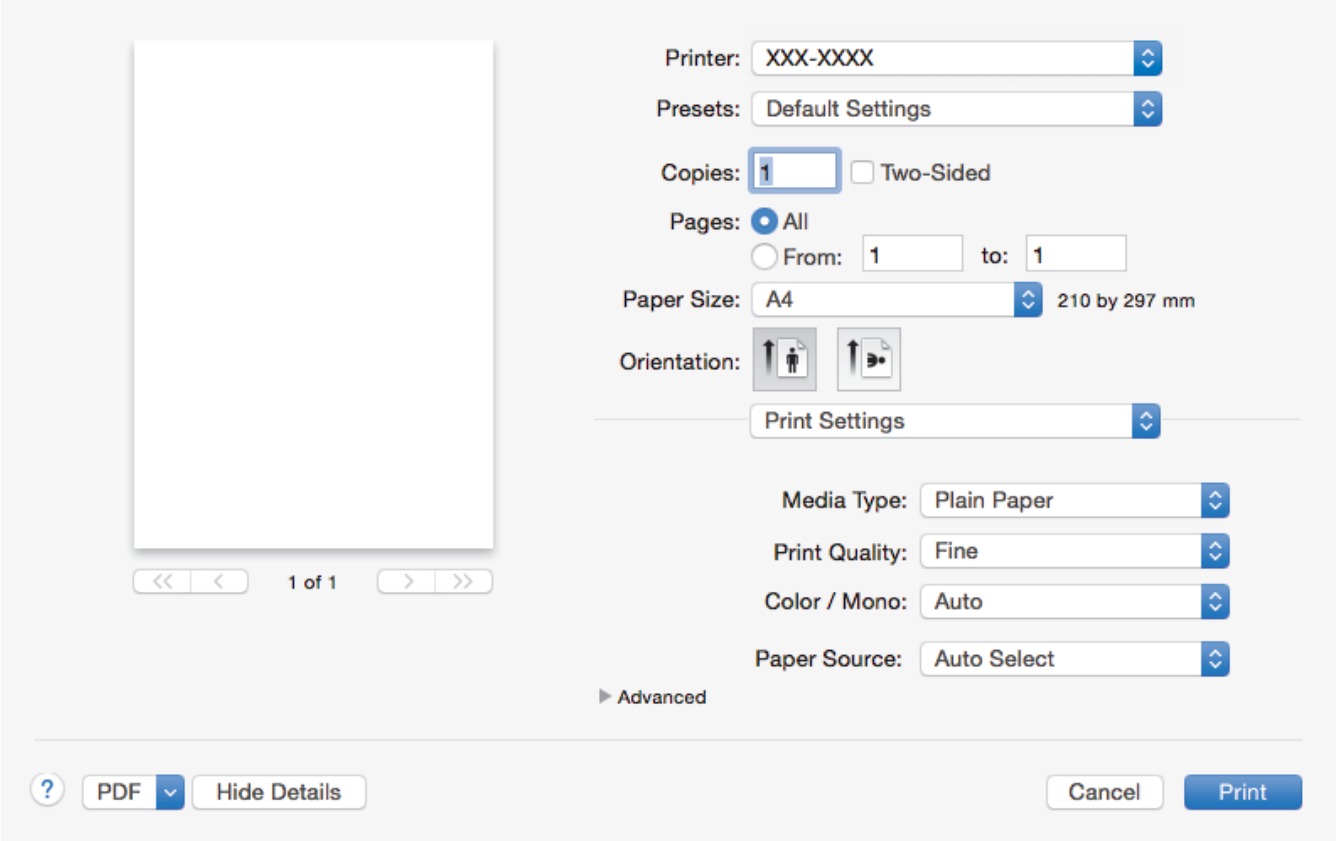

1. **Media Type**

   Select the type of media you want to use. To achieve the best print results, the machine automatically adjusts its print settings according to the selected media type.

2. **Print Quality**

   Select the print resolution you want. Because print quality and speed are related, the higher the quality, the longer it will take to print the document.

3. **Color / Mono**

   Select the Colour/Mono settings to use.

NOTE

- The machine's colour sensor is very sensitive and may perceive faded black text or an off-white background as colour. If you know that your document is black and white and you want to conserve colour toner, select **Mono** mode.
- If either the Cyan, Magenta or Yellow toner reaches the end of its life while printing a colour document, the print job cannot be completed. Cancel your print job and select to start the print job again in **Mono** mode, as long as Black toner is available.

4. **Paper Source**

   Select the paper source setting according to your print conditions or purpose.

5. **Advanced**

   Toner Save Mode

   Select this feature to conserve toner by using less toner to print documents; printouts appear lighter, but are still legible.

   Improve Print Output

   Select this option to reduce the amount of paper curling and improve the toner fixing.

   Quiet Mode

   Select this option to reduce printing noise.

Other Print Options

Skip Blank Page

Select this option to allow the printer driver to automatically detect blank pages and exclude them from printing.

Color Settings

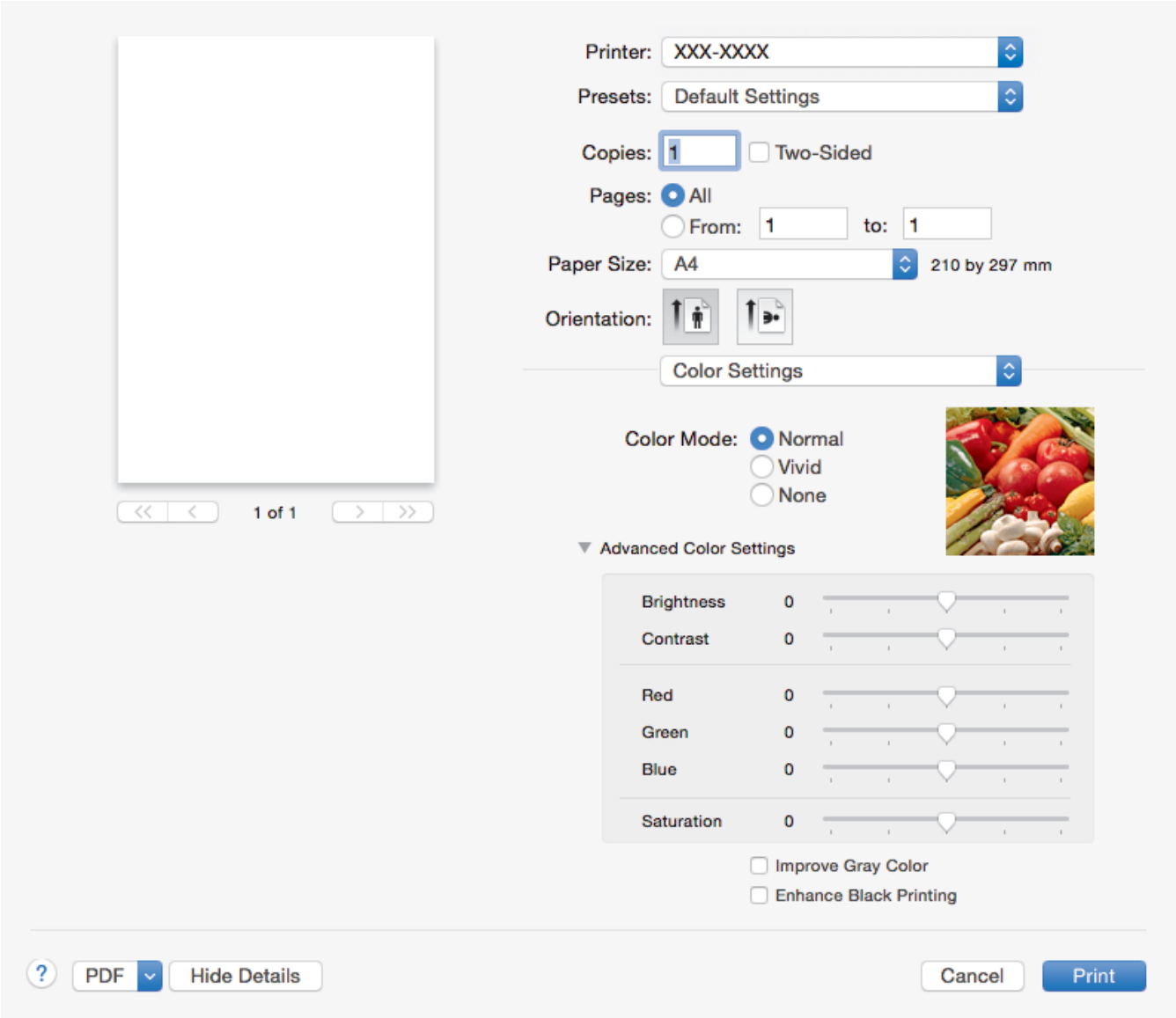

1. **Color Mode**

   Select the colour mode to suit your preference.

2. **Advanced Color Settings**

   Click the disclosure triangle to select the Colour Enhancement feature. This feature analyses your image to improve its sharpness, white balance and colour density. This process may take several minutes depending on the size of the image and the specifications of your computer.

Secure Print

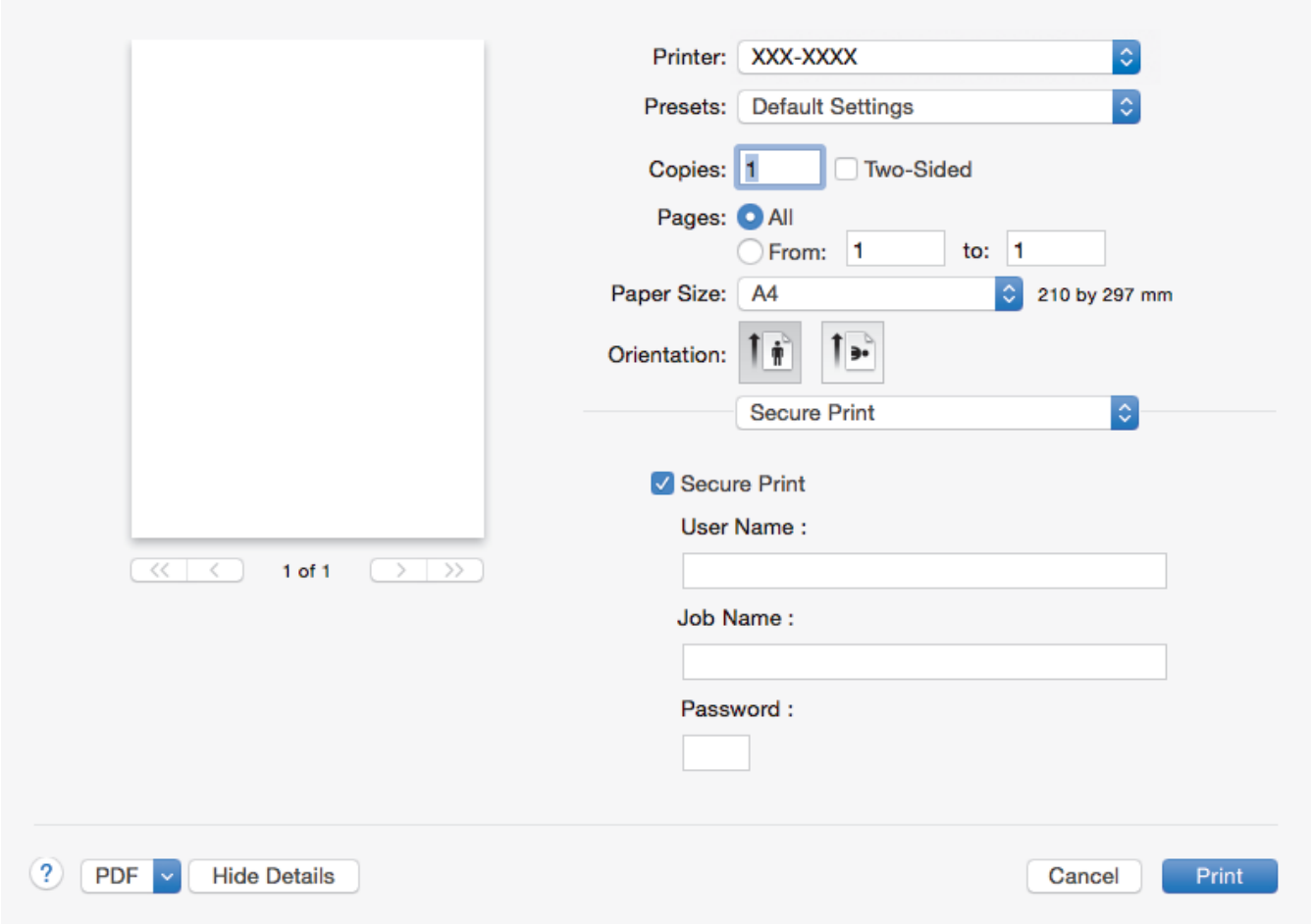

1. **Secure Print (Available only for certain models)**

   This feature ensures that confidential or sensitive documents do not print until you enter a password on the machine's control panel.

Related Information

- Print from Your Computer (Mac)

Related Topics:

- Print a Document (Mac)

Secure Print (Mac)

Use Secure Print to ensure that confidential or sensitive documents do not print until you enter a password on the machine's control panel.

- The secure data is deleted from the machine when you turn off the machine.

>> DCP-L3510CDW/DCP-L3551CDW
>> MFC-L3710CW/MFC-L3735CDN/MFC-L3745CDW/MFC-L3750CDW/MFC-L3770CDW

DCP-L3510CDW/DCP-L3551CDW

1. From an application, such as Apple TextEdit, click the **File** menu, and then select **Print**.
2. Select **Brother XXX-XXXX** (where XXXX is your model name).
3. Click the application pop-up menu, and then select the **Secure Print** option. The **Secure Print** options appear.
4. Select the **Secure Print** check box.
5. Type your user name, job name and a four-digit password.
6. Click **Print**.
7. On the machine's control panel, press **Menu**.
8. Press ▲ or ▼ to display the `[Secure Print]` option, and then press **OK**.
9. Press ▲ or ▼ to display your user name, and then press **OK**.

   The LCD displays the list of secured jobs for your name.
10. Press ▲ or ▼ to display the print job, and then press **OK**.
11. Enter your four-digit password, and then press **OK**.
12. Press ▲ or ▼ to select the `[Print]` option, and then press **OK**.
13. Press ▲ or ▼ to enter the number of copies you want.
14. Press **OK**.

    The machine prints the data.

After you have printed the secured data, it will be cleared from the machine's memory.

MFC-L3710CW/MFC-L3735CDN/MFC-L3745CDW/MFC-L3750CDW/MFC-L3770CDW

1. From an application, such as Apple TextEdit, click the **File** menu, and then select **Print**.
2. Select **Brother XXX-XXXX** (where XXXX is your model name).
3. Click the application pop-up menu, and then select the **Secure Print** option. The **Secure Print** options appear.
4. Select the **Secure Print** check box.
5. Type your user name, job name and a four-digit password.
6. Click **Print**.
7. On the machine's control panel, swipe left or right or press ◀ or ▶ to display the `[Secure Print]` option, and then press `[Secure Print]`.
8. Swipe up or down or press ▲ or ▼ to display user names, and then press your user name.

   The LCD displays the list of secured jobs for your name.
9. Swipe up or down or press ▲ or ▼ to display the print job, and then press it.
10. Enter your four-digit password, and then press `[OK]`.
11. Enter the number of copies you want.
12. Press `[Start]`.

After you have printed the secured data, it will be cleared from the machine's memory.

Related Information

- Print from Your Computer (Mac)

Print a Document Using the BR-Script3 Printer Driver (PostScript® 3™ language emulation) (Mac)

The BR-Script3 printer driver lets you print PostScript® data more clearly.

- Go to your model's **Downloads** page on the Brother Solutions Center at support.brother.com to download the PS driver (BR-Script3 printer driver).
- Make sure you have added the BR-Script3 printer driver from **Printers & Scanners** in the **System Preferences** list on your Mac.

1. Make sure you have loaded the correct size paper in the paper tray.
2. From an application, such as Apple TextEdit, click the **File** menu, and then select **Print**.
3. Select your machine.
4. Type the number of copies you want in the **Copies** field.
5. Click the **Paper Size** pop-up menu, and then select your paper size.
6. Select the **Orientation** option that matches the way you want the document to print.
7. Click the print options pop-up menu, and then click **Printer Features**.

   The **Printer Features** options appear.
8. Click the **Print Quality** pop-up menu, and then select the print quality.
9. Click the **Media Type** pop-up menu, and then select the type of paper you are using.
10. Select the **Auto**, **Color**, or **Mono** option for the **Color / Mono** print setting.
11. Change other printer settings, if needed.
12. Click **Print**.

Related Information

- Print from Your Computer (Mac)

Monitor the Status of the Machine from Your Computer (Mac)

The Status Monitor utility is a configurable software tool for monitoring the status of a device, allowing you to get immediate notification of error messages, such as paper empty or paper jam, at preset update intervals. You can also access Web Based Management.

1. Click the **System Preferences** menu, select **Printers & Scanners**, and then select your machine.
2. Click the **Options & Supplies** button.
3. Click the **Utility** tab, and then click the **Open Printer Utility** button.

   Status Monitor starts.

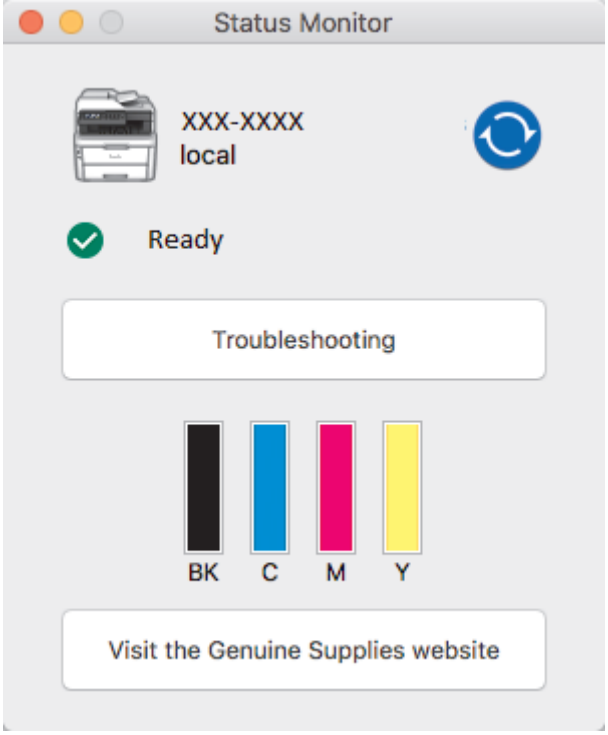

Troubleshooting

Click the **Troubleshooting** button to access the troubleshooting website.

Visit the Genuine Supplies website

Click the **Visit the Genuine Supplies website** button for more information on Brother genuine supplies.

Updating the machine's status

To view the latest machine status while the **Status Monitor** window is open, click the icon. You can set the interval at which the software updates machine status information. Click **Brother Status Monitor** in the menu bar, and then select **Preferences**.

Web Based Management (Network Connection Only)

Access the Web Based Management System by clicking the machine icon on the **Status Monitor** screen. You can use a standard Web Browser to manage your machine using HTTP (Hyper Text Transfer Protocol).

Related Information

- Print from Your Computer (Mac)

Related Topics:

- Printing Problems
- Calibrate Colour Output

Cancel a Print Job

>> DCP-L3510CDW/DCP-L3551CDW
>> MFC-L3710CW/MFC-L3735CDN/MFC-L3745CDW/MFC-L3750CDW/MFC-L3770CDW

DCP-L3510CDW/DCP-L3551CDW

1. Press **Stop/Exit**.

To cancel multiple print jobs, press and hold **Stop/Exit** for four seconds.

MFC-L3710CW/MFC-L3735CDN/MFC-L3745CDW/MFC-L3750CDW/MFC-L3770CDW

1. Press .

To cancel multiple print jobs, press and hold for about four seconds.

Related Information

- Print

Related Topics:

- Printing Problems

Test Print

If there are problems with print quality, follow these instructions to do a test print:

>> DCP-L3510CDW/DCP-L3551CDW
>> MFC-L3710CW/MFC-L3735CDN/MFC-L3745CDW/MFC-L3750CDW/MFC-L3770CDW

DCP-L3510CDW/DCP-L3551CDW

1. Press **Menu**.
2. Press ▲ or ▼ to display the `[Printer]` option, and then press **OK**.
3. (For Printer Emulation Supported models)
   Press ▲ or ▼ to display the `[Print Options]` option, and then press **OK**.
4. Press ▲ or ▼ to display the `[Test Print]` option, and then press **OK**.
5. Press **Mono Start** or **Colour Start**.
   The machine prints a Test Print page.
6. Press **Stop/Exit**.

MFC-L3710CW/MFC-L3735CDN/MFC-L3745CDW/MFC-L3750CDW/MFC-L3770CDW

1. Press `[Settings]` > `[All Settings]` > `[Printer]` > `[Print Options]` > `[Test Print]`.
2. Press `[Yes]`.
3. Press .

Related Information

- Print

Related Topics:

- Improve the Print Quality

Scan

- Scan Using the Scan Button on Your Brother Machine
- Scan from Your Computer (Windows)
- Scan from Your Computer (Mac)
- Configure Scan Settings Using Web Based Management

Scan Using the Scan Button on Your Brother Machine

- Scan Photos and Graphics
- Save Scanned Data to a Folder as a PDF File
- Save Scanned Data to a USB Flash Drive
- Scan to an Editable Text File (OCR)
- Scan to Email Attachment
- Scan to FTP
- Scan to Network (Windows)
- Scan to SharePoint
- Web Services for Scanning on Your Network (Windows 7, Windows 8 and Windows 10)
- Change Scan Button Settings from ControlCenter4 (Windows)
- Change Scan Button Settings from Brother iPrint&Scan (Mac)
- Configure Certificate for Signed PDF
- Disable Scanning from Your Computer

Scan Photos and Graphics

Send scanned photos or graphics directly to your computer.

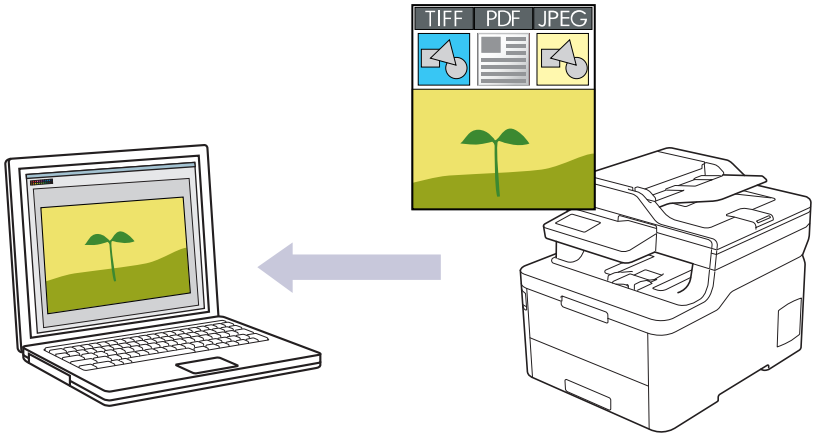

Use the Scan button on the machine to make temporary changes to the scan settings. To make permanent changes, use either ControlCenter4 (Windows) or Brother iPrint&Scan (Mac) software.

>> DCP-L3510CDW/DCP-L3551CDW
>> MFC-L3710CW/MFC-L3735CDN/MFC-L3745CDW/MFC-L3750CDW/MFC-L3770CDW

DCP-L3510CDW/DCP-L3551CDW

1. Load your document.
2. Press (**Scan**).
3. Press ▲ or ▼ to select the `[to PC]` option, and then press **OK**.
4. Press ▲ or ▼ to select the `[Image]` option, and then press **OK**.
5. If the machine is connected over the network, press ▲ or ▼ to select the destination computer.
6. Press **OK**.

If the LCD prompts you to enter a PIN, enter the four-digit PIN for the destination computer on the LCD and then press **OK**.

7. Do one of the following:
   - To change the scan settings for this document, press **Options** or **Copy/Scan Options** and then go to the next step.
   - To use the default scan settings, press **Mono Start** or **Colour Start**.

     The machine starts scanning. If you are using the machine's scanner glass, follow the LCD instructions to complete the scanning job.

- To change scan settings, Brother's ControlCenter software must be installed on a computer connected to the machine.

8. The machine will prompt you to set each of the following scan settings. Press ▲ or ▼ to select the desired option, and then press **OK** to proceed to the next scan setting.
   - `[Scan Type]`
   - `[Resolution]`
   - `[File Type]`
   - `[Document Size]`
   - `[Auto Deskew]` (available for certain models)

- [Remove Bkg Clr]

  (available only for the [Colour] and [Grey] options.)

9. Press **Mono Start** or **Colour Start**.

   The machine starts scanning. If using the machine's scanner glass, follow the LCD instructions to complete the scanning job.

MFC-L3710CW/MFC-L3735CDN/MFC-L3745CDW/MFC-L3750CDW/MFC-L3770CDW

1. Load your document.
2. Press [Scan] > [to PC] > [to Image] .
3. If the machine is connected over the network, select the computer name you want to send data.

If the LCD prompts you to enter a PIN for the computer, enter the four-digit PIN on the LCD, and then press [OK].

4. Do one of the following:
   - To change the scan settings, press [Options], and then go to the next step.
   - To use the default scan settings, press [Start].

     The machine starts scanning. If using the machine's scanner glass, follow the touchscreen instructions to complete the scanning job.

To change scan settings, a computer with Brother's ControlCenter software installed must be connected to the machine.

5. To scan both sides of the document (MFC-L3770CDW):
   - Press [2-sided Scan], and then select the document type.

Option	Description
2-sided Scan: Long Edge	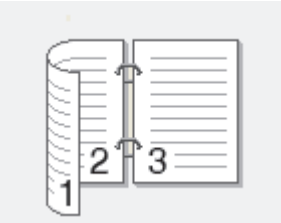
2-sided Scan: Short Edge	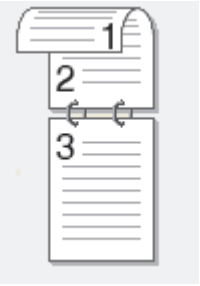

6. Select the scan settings you want to change:
   - [Resolution]
   - [File Type]
   - [Scan Type]
   - [Document Size]
   - [Scan Settings]
   - [Brightness]
   - [Contrast]

     (available only for the [Colour] and [Grey] options)

- [Auto Deskew]
- [Skip Blank Page]
- [Remove Background Colour]

  (available only for the [Colour] and [Grey] options)

- If your machine displays the [OK] button, press [OK].
- To save the settings as a shortcut, press [Save as Shortcut].

7. Press [Start].

   The machine starts scanning. If using the machine's scanner glass, follow the touchscreen instructions to complete the scanning job.

Related Information

- Scan Using the Scan Button on Your Brother Machine

Related Topics:

- Change Scan Button Settings from ControlCenter4 (Windows)
- Change Scan Button Settings from Brother iPrint&Scan (Mac)

Save Scanned Data to a Folder as a PDF File

Scan documents and save them to a folder on your computer as PDF files.

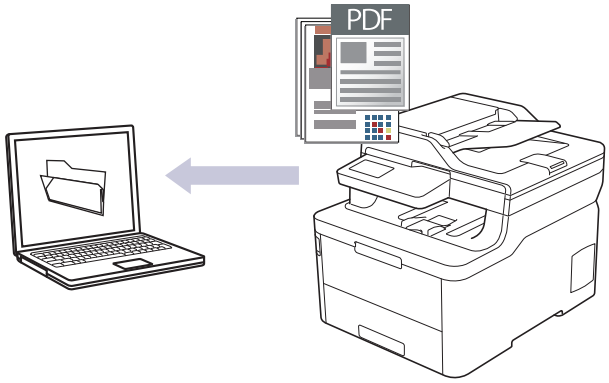

Use the Scan button on the machine to make temporary changes to the scan settings. To make permanent changes, use either ControlCenter4 (Windows) or Brother iPrint&Scan (Mac) software.

>> DCP-L3510CDW/DCP-L3551CDW
>> MFC-L3710CW/MFC-L3735CDN/MFC-L3745CDW/MFC-L3750CDW/MFC-L3770CDW

DCP-L3510CDW/DCP-L3551CDW

1. Load your document.
2. Press (**Scan**).
3. Press ▲ or ▼ to select the `[to PC]` option, and then press **OK**.
4. Press ▲ or ▼ to select the `[File]` option, and then press **OK**.
5. If the machine is connected over the network, press ▲ or ▼ to select the destination computer.
6. Press **OK**.

If the LCD prompts you to enter a PIN, enter the four-digit PIN for the destination computer on the LCD and then press **OK**.

7. Do one of the following:
   - To change the scan settings for this document, press **Options** or **Copy/Scan Options** and then go to the next step.
   - To use the default scan settings, press **Mono Start** or **Colour Start**.

     The machine starts scanning. If you are using the machine's scanner glass, follow the LCD instructions to complete the scanning job.

- To change scan settings, Brother's ControlCenter software must be installed on a computer connected to the machine.

8. The machine will prompt you to set each of the following scan settings. Press ▲ or ▼ to select the desired option, and then press **OK** to proceed to the next scan setting.
   - `[Scan Type]`
   - `[Resolution]`
   - `[File Type]`
   - `[Document Size]`
   - `[Auto Deskew]` (available for certain models)
   - `[Remove Bkg Clr]`

(available only for the [Colour] and [Grey] options.)

9. Press **Mono Start** or **Colour Start**.

   The machine starts scanning. If using the machine's scanner glass, follow the LCD instructions to complete the scanning job.

MFC-L3710CW/MFC-L3735CDN/MFC-L3745CDW/MFC-L3750CDW/MFC-L3770CDW

1. Load your document.
2. Press [Scan] > [to PC] > [to File] .
3. If the machine is connected over the network, select the computer name you want to send data.

   If the LCD prompts you to enter a PIN for the computer, enter the four-digit PIN on the LCD, and then press [OK].

4. Do one of the following:
   - To change the scan settings, press [Options], and then go to the next step.
   - To use the default scan settings, press [Start].

     The machine starts scanning. If using the machine's scanner glass, follow the touchscreen instructions to complete the scanning job.

   To change scan settings, a computer with Brother's ControlCenter software installed must be connected to the machine.

5. To scan both sides of the document (MFC-L3770CDW):
   - Press [2-sided Scan], and then select the document type.

Option	Description
2-sided Scan: Long Edge	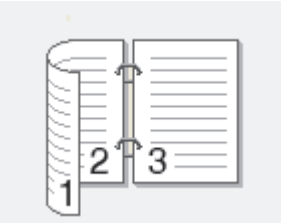
2-sided Scan: Short Edge	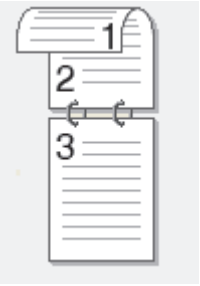

6. Select the scan settings you want to change:
   - [Resolution]
   - [File Type]
   - [Scan Type]
   - [Document Size]
   - [Scan Settings]
   - [Brightness]
   - [Contrast]

     (available only for the [Colour] and [Grey] options)
   - [Auto Deskew]

- [Skip Blank Page]
- [Remove Background Colour]

  (available only for the [Colour] and [Grey] options)

- If your machine displays the [OK] button, press [OK].
- To save the settings as a shortcut, press [Save as Shortcut].

7. Press [Start].

   The machine starts scanning. If using the machine's scanner glass, follow the touchscreen instructions to complete the scanning job.

Related Information

- Scan Using the Scan Button on Your Brother Machine

Related Topics:

- Change Scan Button Settings from ControlCenter4 (Windows)
- Change Scan Button Settings from Brother iPrint&Scan (Mac)

Save Scanned Data to a USB Flash Drive

Related Models: MFC-L3745CDW/MFC-L3750CDW/MFC-L3770CDW

Scan documents directly to a USB flash drive.

1. Load your document.
2. Insert a USB flash drive into your machine.

   The LCD automatically changes.
3. Press [Scan to USB].
4. Do one of the following:
   - To change the settings, press [Options], and then select the button you want to change. Follow the machine's instructions.

     - To set your own default settings: after making changes to settings, press the [Set New Default] option, and then press [Yes].
     - To restore the factory settings: press [Factory Reset], and then press [Yes].
   - Press [Start] to start scanning without changing additional settings.
5. To scan both sides of the document (MFC-L3770CDW):
   - Press [2-sided Scan], and then select the document type.

Option	Description
2-sided Scan: Long Edge	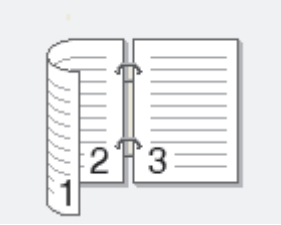
2-sided Scan: Short Edge	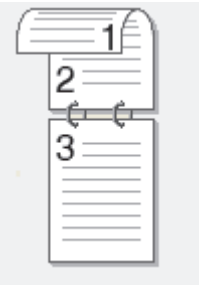

6. Select the scan settings you want to change:
   - [Resolution]
   - [File Type]
   - [Scan Type]
   - [Document Size]
   - [Brightness]
   - [Contrast]

     (available only for the [Colour] and [Grey] options)
   - [File Name]
   - [File Name Style]

- [File Size]
- [Auto Deskew]
- [Skip Blank Page]
- [Skip Blank Page Sensitivity]
- [Remove Background Colour]

  (available only for the [Colour] and [Grey] options)

- If your machine displays the [OK] button, press [OK].
- To save the settings as a shortcut, press [Save as Shortcut].

7. Press [Start].

   The machine starts scanning. If using the machine's scanner glass, follow the touchscreen instructions to complete the scanning job.

IMPORTANT

The LCD displays a message while reading the data. DO NOT unplug the power cord or remove the USB flash drive from the machine while it is reading the data. You could lose your data or damage the USB flash drive.

Related Information

- Scan Using the Scan Button on Your Brother Machine

Scan to an Editable Text File (OCR)

Your machine can convert characters in a scanned document to text using optical character recognition (OCR) technology. You can edit this text using your preferred text-editing application.

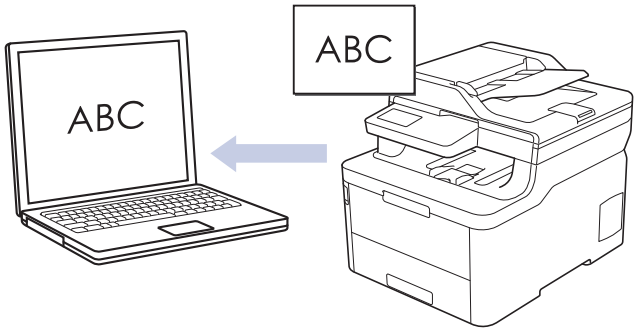

- The Scan to OCR feature is available for certain languages.
- Use the Scan button on the machine to make temporary changes to the scan settings. To make permanent changes, use either ControlCenter4 (Windows) or Brother iPrint&Scan (Mac) software.

>> DCP-L3510CDW/DCP-L3551CDW
>> MFC-L3710CW/MFC-L3735CDN/MFC-L3745CDW/MFC-L3750CDW/MFC-L3770CDW

DCP-L3510CDW/DCP-L3551CDW

1. Load your document.
2. Press (**Scan**).
3. Press ▲ or ▼ to select the `[to PC]` option, and then press **OK**.
4. Press ▲ or ▼ to select the `[OCR]` option, and then press **OK**.
5. If the machine is connected over the network, press ▲ or ▼ to select the destination computer.
6. Press **OK**.

If the LCD prompts you to enter a PIN, enter the four-digit PIN for the destination computer on the LCD and then press **OK**.

7. Do one of the following:
   - To change the scan settings for this document, press **Options** or **Copy/Scan Options** and then go to the next step.
   - To use the default scan settings, press **Mono Start** or **Colour Start**.

     The machine starts scanning. If you are using the machine's scanner glass, follow the LCD instructions to complete the scanning job.

- To change scan settings, Brother's ControlCenter software must be installed on a computer connected to the machine.

8. The machine will prompt you to set each of the following scan settings. Press ▲ or ▼ to select the desired option, and then press **OK** to proceed to the next scan setting.
   - `[Scan Type]`
   - `[Resolution]`
   - `[File Type]`
   - `[Document Size]`
   - `[Auto Deskew]` (available for certain models)

- [Remove Bkg Clr]

  (available only for the [Colour] and [Grey] options.)

9. Press **Mono Start** or **Colour Start**.

   The machine scans the document, converts it to editable text, and then sends it to your default word processing application.

MFC-L3710CW/MFC-L3735CDN/MFC-L3745CDW/MFC-L3750CDW/MFC-L3770CDW

1. Load your document.
2. Press [Scan] > [to PC] > [to OCR] .
3. If the machine is connected over the network, select the computer name you want to send data.

If the LCD prompts you to enter a PIN for the computer, enter the four-digit PIN on the LCD, and then press [OK].

4. Do one of the following:
   - To change the scan settings, press [Options], and then go to the next step.
   - To use the default scan settings, press [Start].

     The machine starts scanning. If using the machine's scanner glass, follow the touchscreen instructions to complete the scanning job.

To change scan settings, a computer with Brother's ControlCenter software installed must be connected to the machine.

5. To scan both sides of the document (MFC-L3770CDW):
   - Press [2-sided Scan], and then select the document type.

Option	Description
2-sided Scan: Long Edge	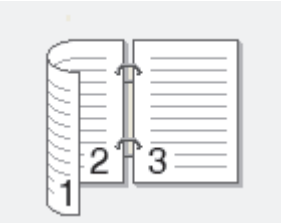
2-sided Scan: Short Edge	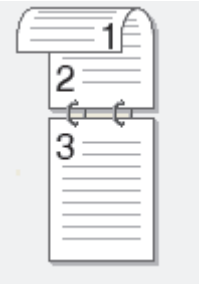

6. Select the scan settings you want to change:
   - [Resolution]
   - [File Type]
   - [Scan Type]
   - [Document Size]
   - [Scan Settings]
   - [Brightness]
   - [Contrast]

     (available only for the [Colour] and [Grey] options)

- [Auto Deskew]
- [Skip Blank Page]
- [Remove Background Colour]

  (available only for the [Colour] and [Grey] options)

- If your machine displays the [OK] button, press [OK].
- To save the settings as a shortcut, press [Save as Shortcut].

7. Press [Start].

   The machine starts scanning. If using the machine's scanner glass, follow the touchscreen instructions to complete the scanning job.

Related Information

- Scan Using the Scan Button on Your Brother Machine

Related Topics:

- Change Scan Button Settings from ControlCenter4 (Windows)
- Change Scan Button Settings from Brother iPrint&Scan (Mac)

Scan to Email Attachment

Send a scanned document as an email attachment.

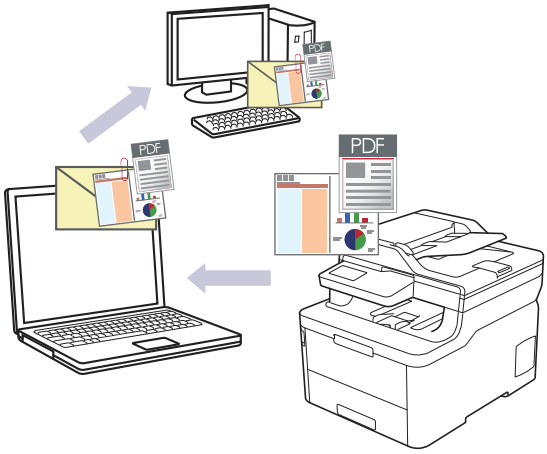

- Use the Scan button on the machine to make temporary changes to the scan settings. To make permanent changes, use either ControlCenter4 (Windows) or Brother iPrint&Scan (Mac) software.
- The Scan to Email feature does not support Webmail services. Use the Scan to Image or Scan to File feature to scan a document or a picture, and then attach the scanned file to an email message.

The machine scans to your default email application.

>> DCP-L3510CDW/DCP-L3551CDW
>> MFC-L3710CW/MFC-L3735CDN/MFC-L3745CDW/MFC-L3750CDW/MFC-L3770CDW

DCP-L3510CDW/DCP-L3551CDW

1. Load your document.
2. Press (**Scan**).
3. Press ▲ or ▼ to select the `[to PC]` option, and then press **OK**.
4. Press ▲ or ▼ to select the `[E-mail]` option, and then press **OK**.
5. If the machine is connected over the network, press ▲ or ▼ to select the destination computer.
6. Press **OK**.

If the LCD prompts you to enter a PIN, enter the four-digit PIN for the destination computer on the LCD and then press **OK**.

7. Do one of the following:
   - To change the scan settings for this document, press **Options** or **Copy/Scan Options** and then go to the next step.
   - To use the default scan settings, press **Mono Start** or **Colour Start**.

     The machine starts scanning. If you are using the machine's scanner glass, follow the LCD instructions to complete the scanning job.

- To change scan settings, Brother's ControlCenter software must be installed on a computer connected to the machine.

8. The machine will prompt you to set each of the following scan settings. Press ▲ or ▼ to select the desired option, and then press **OK** to proceed to the next scan setting.
   - `[Scan Type]`
   - `[Resolution]`

- [File Type]
- [Document Size]
- [Auto Deskew] (available for certain models)
- [Remove Bkg Clr]

  (available only for the [Colour] and [Grey] options.)

9. Press **Mono Start** or **Colour Start**.

   The machine scans the document and saves it as a file attachment. It then launches your email application and opens a new, blank email message with the scanned file attached.

MFC-L3710CW/MFC-L3735CDN/MFC-L3745CDW/MFC-L3750CDW/MFC-L3770CDW

1. Load your document.
2. Press [Scan] > [to PC] > [to E-mail] .
3. If the machine is connected over the network, select the computer name you want to send data.

   If the LCD prompts you to enter a PIN for the computer, enter the four-digit PIN on the LCD, and then press [OK].

4. Do one of the following:
   - To change the scan settings, press [Options], and then go to the next step.
   - To use the default scan settings, press [Start].

     The machine starts scanning. If using the machine's scanner glass, follow the touchscreen instructions to complete the scanning job.

   To change scan settings, a computer with Brother's ControlCenter software installed must be connected to the machine.

5. To scan both sides of the document (MFC-L3770CDW):
   - Press [2-sided Scan], and then select the document type.

Option	Description
2-sided Scan: Long Edge	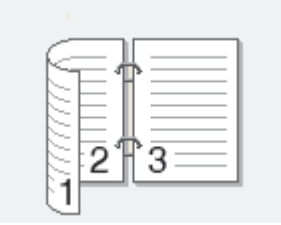
2-sided Scan: Short Edge	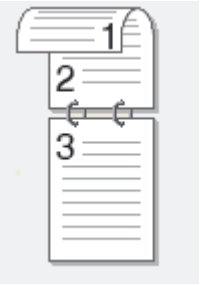

6. Select the scan settings you want to change:
   - [Resolution]
   - [File Type]
   - [Scan Type]
   - [Document Size]
   - [Scan Settings]

- [Brightness]
- [Contrast]

  (available only for the [Colour] and [Grey] options)
- [Auto Deskew]
- [Skip Blank Page]
- [Remove Background Colour]

  (available only for the [Colour] and [Grey] options)

- If your machine displays the [OK] button, press [OK].
- To save the settings as a shortcut, press [Save as Shortcut].

7. Press [Start].

   The machine starts scanning. If using the machine's scanner glass, follow the touchscreen instructions to complete the scanning job.

Related Information

- Scan Using the Scan Button on Your Brother Machine

Related Topics:

- Change Scan Button Settings from ControlCenter4 (Windows)
- Change Scan Button Settings from Brother iPrint&Scan (Mac)

Scan to FTP

Scan documents directly to an FTP server when you need to share the scanned information. For added convenience, configure different profiles to save your favourite Scan to FTP destinations.

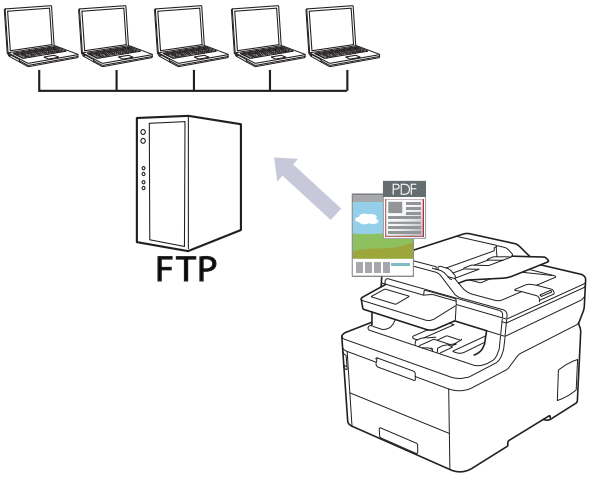

- Set up a Scan to FTP Profile
- Upload Scanned Data to an FTP Server

Set up a Scan to FTP Profile

Set up a Scan to FTP Profile to scan and upload the scanned data directly to an FTP location.

We recommend Microsoft Internet Explorer 11/Microsoft Edge for Windows and Safari 10/11 for Mac. Make sure that JavaScript and Cookies are always enabled in whichever browser you use.

1. Start your web browser.

   Type "https://machine's IP address" in your browser's address bar (where "machine's IP address" is the IP address of the machine or the print server name). For example: https://192.168.1.2

   If the machine prompts you for a password, type it, and then click .
2. Click the **Scan** tab.
3. Click the **Scan to FTP/Network/SharePoint** menu in the left navigation bar.
4. Select the **FTP** option, and then click **Submit**.

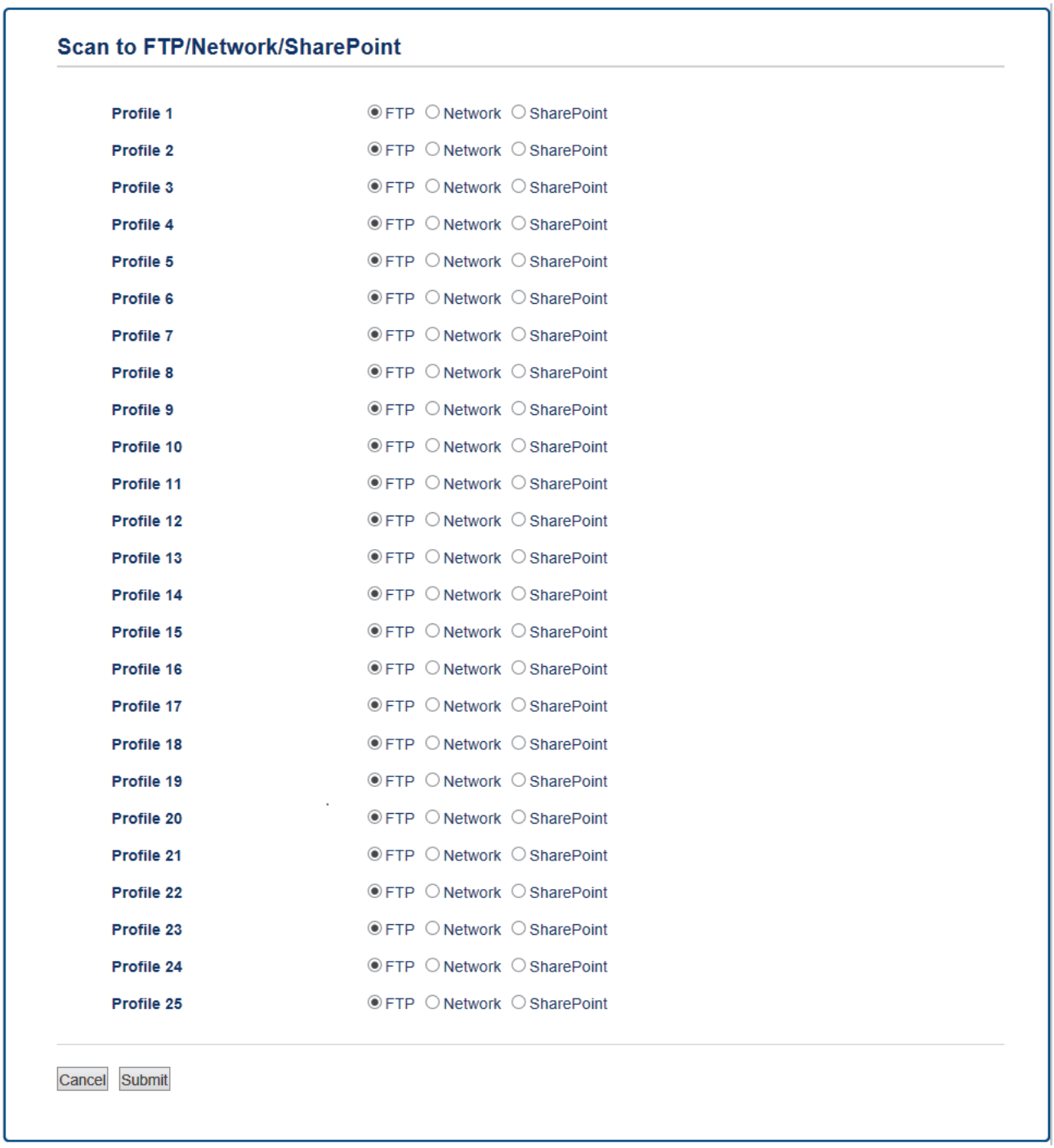

5. Click the **Scan to FTP/Network/SharePoint Profile** menu in the left navigation bar.
6. Select the profile you want to set up or change.
7. In the **Profile Name** field, type a name for this server profile (up to 15 alphanumeric characters). The machine will display this name on the LCD.
8. In the **Host Address** field, type the Host Address (for example: ftp.example.com; up to 64 characters) or the IP address (for example: 192.23.56.189).
9. Change the **Port Number** setting used to access the FTP server. The default for this setting is port 21. In most cases this setting does not need to be changed.
10. In the **Username** field, type a user name (up to 32 characters) that has permission to write data to the FTP server.
11. In the **Password** field, type the password (up to 32 characters) associated with the user name you entered in the **Username** field. Type the password again in the **Retype password** field.
12. In the **Store Directory** field, type the path to the folder on the FTP server where you want to send your scanned data. Do not type a slash mark at the beginning of the path (see example).

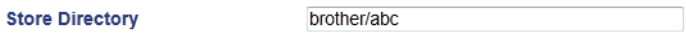

13. Click the **File Name** drop-down list, and then select a file name prefix from the preset names provided, or from user-defined names. The file name used for the scanned document will be the file name prefix you select, followed by the last six digits of the flatbed/ADF scanner counter and the file extension (for example: "Estimate_098765.pdf").
14. Click the **Quality** drop-down list, and then select a quality setting. If you choose the **User Select** option, the machine will prompt users to select a setting each time they use the scan profile.
15. Click the **File Type** drop-down list, and then select the file type you want to use for the scanned document. If you choose the **User Select** option, the machine will prompt users to select a setting each time they use the scan profile.
16. Click the **Document Size** drop-down list, and then select your document size from the list. This is necessary to make sure the scanned file is the correct size.
17. Click the **File Size** drop-down list, and then select your file size from the list.
18. Click the **Remove Background Color** drop-down list, and then select the level from the list. You can use this feature to remove the background colour of documents to make the scanned data more legible.
19. Set the **Passive Mode** option to off or on depending on your FTP server and network firewall configuration. The default setting is on. In most cases this setting does not need to be changed.
20. Click **Submit**.

Using the following characters: ?, /, \, ", :, <, >, | or * may cause a sending error.

Related Information

- Scan to FTP

Upload Scanned Data to an FTP Server

Share scanned information by saving it to your FTP server.

>> DCP-L3510CDW/DCP-L3551CDW
>> MFC-L3710CW/MFC-L3735CDN/MFC-L3745CDW/MFC-L3750CDW/MFC-L3770CDW

DCP-L3510CDW/DCP-L3551CDW

1. Load your document.
2. Press (**Scan**).
3. Press ▲ or ▼ to select the `[to FTP]` option, and then press **OK**.
4. Press ▲ or ▼ to select one of the profiles listed, and then press **OK**.

   If the profile is not complete (for example, if the logon account name and password are missing or if the quality or file type is not specified), you will be prompted to enter any missing information.
5. Press **Mono Start** or **Colour Start**.

   The LCD shows the message `[Connecting]`. When the connection to the FTP server is successful, the machine starts scanning. If you are using the machine's scanner glass, follow the LCD instructions to complete the scanning job.

MFC-L3710CW/MFC-L3735CDN/MFC-L3745CDW/MFC-L3750CDW/MFC-L3770CDW

1. Load your document.
2. Press `[Scan]` > `[to FTP]` .
3. The server profiles you have set up using Web Based Management are listed. Select the profile you want. If the profile is not complete (for example, if the logon account name and password are missing, or if the quality or file type is not specified), you will be prompted to enter any missing information.
4. Press `[Start]`.

   The machine starts scanning. If using the machine's scanner glass, follow the touchscreen instructions to complete the scanning job.

Related Information

- Scan to FTP

Scan to Network (Windows)

Scan documents directly to a CIFS server on your local network. For added convenience, you can configure different profiles to save your favourite Scan to Network destinations.

- Set up a Scan to Network Profile
- Upload Scanned Data to a CIFS Server

Set up a Scan to Network Profile

Set up a Scan to Network Profile to scan and upload scanned data directly to a folder on a CIFS server.

We recommend Microsoft Internet Explorer 11/Microsoft Edge for Windows and Safari 10/11 for Mac. Make sure that JavaScript and Cookies are always enabled in whichever browser you use.

1. Start your web browser.

   Type "https://machine's IP address" in your browser's address bar (where "machine's IP address" is the IP address of the machine or the print server name). For example: https://192.168.1.2

   If the machine prompts you for a password, type it, and then click .

2. Click the **Scan** tab.
3. Click the **Scan to FTP/Network/SharePoint** menu in the left navigation bar.
4. Select the **Network** option, and then click **Submit**.

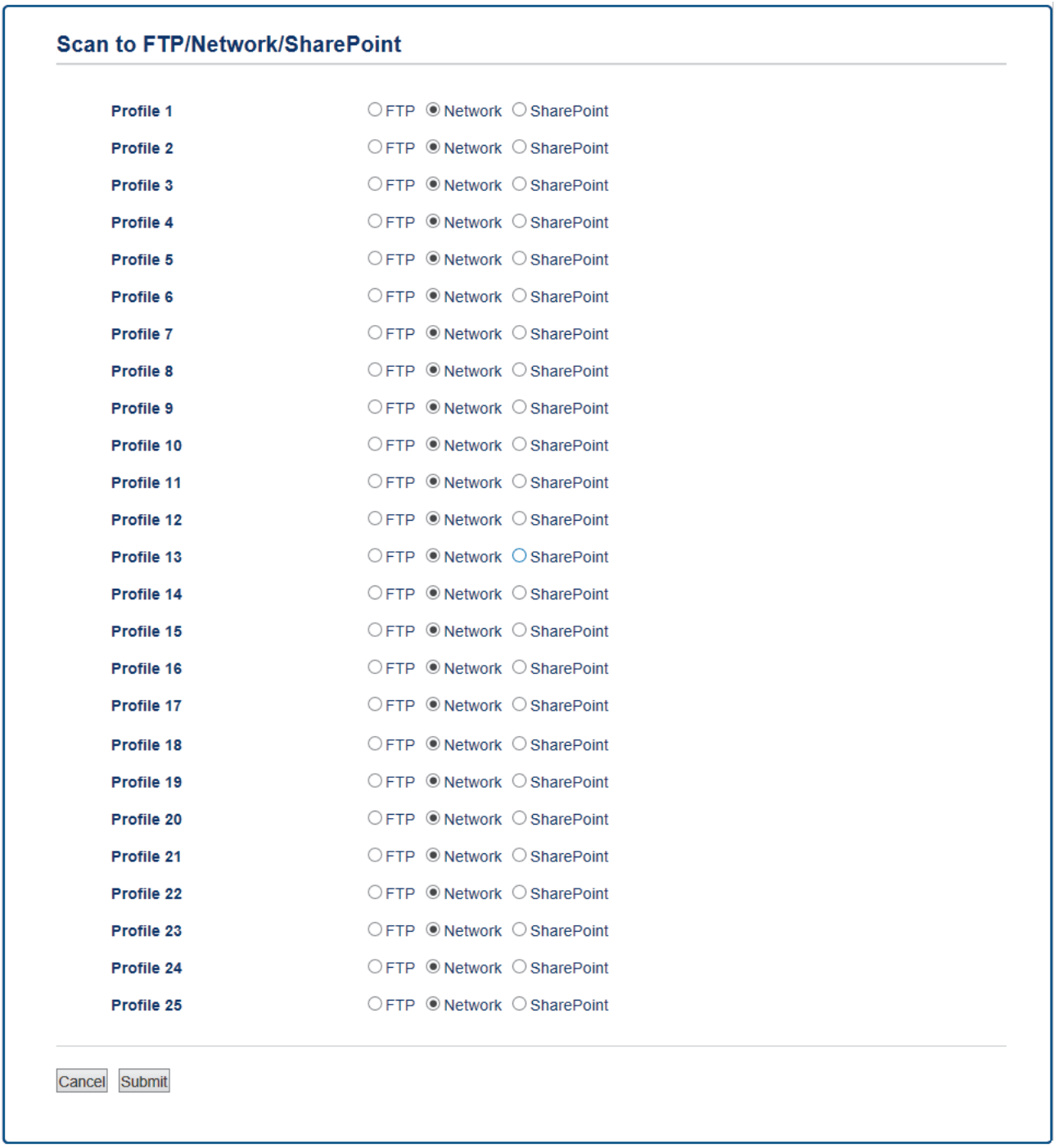

5. Click the **Scan to FTP/Network/SharePoint Profile** menu in the left navigation bar.
6. Select the profile you want to set up or change.
7. In the **Profile Name** field, type a name for this server profile (up to 15 alphanumeric characters). The machine will display this name on the LCD.
8. In the **Network Folder Path** field, type the path to the folder on the CIFS server where you want to send your scanned data.
9. Click the **File Name** drop-down list, and then select a file name prefix from the preset names provided, or from user-defined names. The file name used for the scanned document will be the file name prefix you select, followed by the last six digits of the flatbed/ADF scanner counter and the file extension (for example: "Estimate_098765.pdf").
10. Click the **Quality** drop-down list, and then select a quality setting. If you choose the **User Select** option, the machine will prompt users to select a setting each time they use the scan profile.
11. Click the **File Type** drop-down list, and then select the file type you want to use for the scanned document. If you choose the **User Select** option, the machine will prompt users to select a setting each time they use the scan profile.
12. Click the **Document Size** drop-down list, and then select your document size from the list. This is necessary to make sure the scanned file is the correct size.
13. Click the **File Size** drop-down list, and then select your file size from the list.
14. Click the **Remove Background Color** drop-down list, and then select the level from the list. You can use this feature to remove the background colour of documents to make the scanned data more legible.
15. To PIN-protect this profile, in the **Use PIN for Authentication** field, select **On**.
16. If you selected **On** for the **Use PIN for Authentication** field, type a four-digit PIN in the **PIN Code** field.
17. To set your authentication method, select **Auto**, **Kerberos**, or **NTLMv2** from the **Auth. Method** menu.
18. In the **Username** field, type a user name (up to 96 characters) that has permission to write data to the folder specified in the **Network Folder Path** field. If the user name is part of a domain, enter the user name in one of the following styles:

    user@domain

    domain\user
19. In the **Password** field, type the password (up to 32 characters) associated with the user name you entered in the **Username** field. Type the password again in the **Retype password** field.
20. To set the Kerberos Server Address manually, in the **Kerberos Server Address** field, type the Kerberos Server Address (for example: kerberos.example.com; up to 64 characters).
21. Click **Submit**.

Using the following characters: ?, /, \, ", :, <, >, | or * may cause a sending error.

22. You must configure the SNTP protocol (network time server) or you must set the date, time and time zone correctly on the control panel for all authentication methods. The time must match the time used by the Kerberos Server and CIFS Server.

Related Information

- Scan to Network (Windows)
  - Set the Date and Time Using Web Based Management

Set the Date and Time Using Web Based Management

Make sure the date and time and the time zone settings are set correctly using Web Based Management or the control panel, so the machine's time matches the time being used by the server providing authentication.

Ignore step 1, if you already have a Web Based Management window open.

1. Start your web browser.

   Type "https://machine's IP address" in your browser's address bar (where "machine's IP address" is the IP address of the machine or the print server name). For example: https://192.168.1.2

   If the machine prompts you for a password, type it, and then click .

2. Click the **Administrator** tab.
3. Click the **Date&Time** menu in the left navigation bar.

4. In the **Date** fields, enter the date.
5. Select the clock type from the **Clock Type** field.
6. In the **Time** fields, enter the time.
7. Select the time difference between your location and UTC from the **Time Zone** drop-down list, for example, the time zone for Eastern time in the USA and Canada is UTC-05:00.
8. In the **Auto Daylight** field, click **On** to set the machine to change automatically for Daylight Saving Time. It will reset itself forward one hour in the spring, and back one hour in the autumn (available only for some countries).
9. Click **Submit**.

Related Information

- Set up a Scan to Network Profile

Upload Scanned Data to a CIFS Server

>> DCP-L3510CDW/DCP-L3551CDW
>> MFC-L3710CW/MFC-L3735CDN/MFC-L3745CDW/MFC-L3750CDW/MFC-L3770CDW

DCP-L3510CDW/DCP-L3551CDW

1. Load your document.
2. Press (**Scan**).
3. Press ▲ or ▼ to select the `[to Network]` option, and then press **OK**.
4. Press ▲ or ▼ to select one of the profiles listed, and then press **OK**.

   If the profile is not complete (for example, if the logon account name and password are missing or if the quality or file type is not specified), you will be prompted to enter any missing information.
5. Press **Mono Start** or **Colour Start**.

   The machine starts scanning. If using the machine's scanner glass, follow the LCD instructions to complete the scanning job.

MFC-L3710CW/MFC-L3735CDN/MFC-L3745CDW/MFC-L3750CDW/MFC-L3770CDW

1. Load your document.
2. Press `[Scan]` > `[to Network]` .
3. The server profiles you have set up using Web Based Management are listed. Select the profile you want. If the profile is not complete (for example, if the logon account name and password are missing, or if the quality or file type is not specified), you will be prompted to enter any missing information.
4. Press `[Start]`.

   The machine starts scanning. If using the machine's scanner glass, follow the touchscreen instructions to complete the scanning job.

Related Information

- Scan to Network (Windows)

Scan to SharePoint

Scan documents directly to a SharePoint server when you need to share the scanned information. For added convenience, configure different profiles to save your favourite Scan to SharePoint destinations.

- Set up a Scan to SharePoint Profile
- Upload Scanned Data to a SharePoint Server

Set up a Scan to SharePoint Profile

Set up a Scan to SharePoint Profile to scan and upload the scanned data directly to a SharePoint location.

We recommend Microsoft Internet Explorer 11/Microsoft Edge for Windows and Safari 10/11 for Mac. Make sure that JavaScript and Cookies are always enabled in whichever browser you use.

1. Start your web browser.

   Type "https://machine's IP address" in your browser's address bar (where "machine's IP address" is the IP address of the machine or the print server name). For example: https://192.168.1.2

   If the machine prompts you for a password, type it, and then click .

2. Click the **Scan** tab.
3. Click the **Scan to FTP/Network/SharePoint** menu in the left navigation bar.
4. Select the **SharePoint** option, and then click **Submit**.

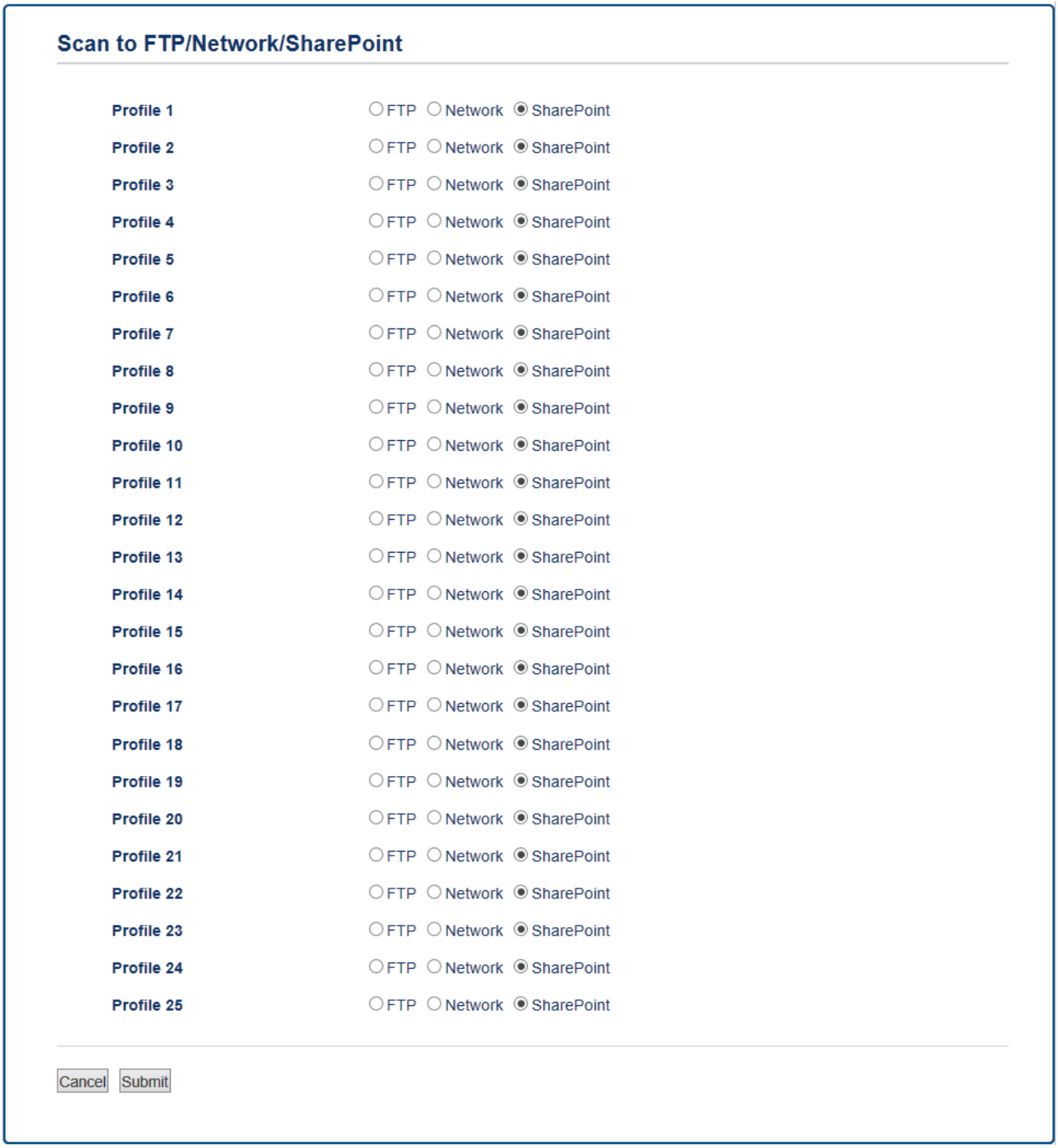

5. Click the **Scan to FTP/Network/SharePoint Profile** menu in the left navigation bar.
6. Select the profile you want to set up or change.
7. In the **Profile Name** field, type a name for this server profile (up to 15 alphanumeric characters). The machine will display this name on the LCD.
8. In the **SharePoint Site Address** field, Copy and Paste the full destination address shown in the address bar of your browser (for example: http://SharePointSiteAddress/Shared%20Documents/Forms/AllItems.aspx) or the IP address (for example: http://192.168.0.1/Shared%20Documents/Forms/AllItems.aspx).
9. Click the **File Name** drop-down list, and then select a file name prefix from the preset names provided, or from user-defined names. The file name used for the scanned document will be the file name prefix you select, followed by the last six digits of the flatbed/ADF scanner counter and the file extension (for example: "Estimate_098765.pdf").
10. Click the **Quality** drop-down list, and then select a quality setting. If you choose the **User Select** option, the machine will prompt users to select a setting each time they use the scan profile.
11. Click the **File Type** drop-down list, and then select the file type you want to use for the scanned document. If you choose the **User Select** option, the machine will prompt users to select a setting each time they use the scan profile.

12. Click the **Document Size** drop-down list, and then select your document size from the list. This is necessary to make sure the scanned file is the correct size.
13. Click the **File Size** drop-down list, and then select your file size from the list.
14. Click the **Remove Background Color** drop-down list, and then select the level from the list. You can use this feature to remove the background colour of documents to make the scanned data more legible.
15. To PIN-protect this profile, in the **Use PIN for Authentication** field, select **On**.
16. If you selected **On** for the **Use PIN for Authentication** field, type a four-digit PIN in the **PIN Code** field.
17. To set your authentication method, select **Auto**, **NTLMv2**, **Kerberos**, or **Basic** from the **Auth. Method** menu. If you choose **Auto**, the authentication method will be detected automatically.
18. In the **Username** field, type the user name (up to 96 characters) that has permission to write data to the folder specified in the **SharePoint Site Address** field. If the user name is part of a domain, enter the user name in one of the following styles:

    user@domain

    domain\user
19. In the **Password** field, type the password (up to 32 characters) associated with the user name you entered in the **Username** field. Type the password again in the **Retype password** field.
20. To set the Kerberos Server Address manually, in the **Kerberos Server Address** field, type the Kerberos Server Address (for example: kerberos.example.com; up to 64 characters).
21. Click **Submit**.

Using the following characters: ?, /, \, ", :, <, >, | or * may cause a sending error.

Related Information

- Scan to SharePoint

Upload Scanned Data to a SharePoint Server

>> DCP-L3510CDW/DCP-L3551CDW
>> MFC-L3710CW/MFC-L3735CDN/MFC-L3745CDW/MFC-L3750CDW/MFC-L3770CDW

DCP-L3510CDW/DCP-L3551CDW

1. Load your document.
2. Press (**Scan**).
3. Press ▲ or ▼ to select the `[to SharePoint]` option, and then press **OK**.
4. Press ▲ or ▼ to select one of the profiles listed, and then press **OK**.

   If the profile is not complete (for example, if the logon account name and password are missing or if the quality or file type is not specified), you will be prompted to enter any missing information.
5. Press **Mono Start** or **Colour Start**.

   The machine starts scanning. If using the machine's scanner glass, follow the LCD instructions to complete the scanning job.

MFC-L3710CW/MFC-L3735CDN/MFC-L3745CDW/MFC-L3750CDW/MFC-L3770CDW

1. Load your document.
2. Press `[Scan]` > `[to SharePoint]`.
3. The server profiles you have set up using Web Based Management are listed. Select the profile you want. If the profile is not complete (for example, if the logon account name and password are missing, or if the quality or file type is not specified), you will be prompted to enter any missing information.
4. Press `[Start]`.

   The machine starts scanning. If using the machine's scanner glass, follow the touchscreen instructions to complete the scanning job.

Related Information

- Scan to SharePoint

Web Services for Scanning on Your Network (Windows 7, Windows 8 and Windows 10)

The Web Services protocol enables Windows 7, Windows 8 and Windows 10 users to scan using a Brother machine on the network. You must install the driver via Web Services.

- Use Web Services to Install Drivers Used for Scanning (Windows 7, Windows 8, and Windows 10)
- Scan Using Web Services from the Brother Machine (Windows 7, Windows 8 and Windows 10)
- Configure Scan Settings for Web Services

Use Web Services to Install Drivers Used for Scanning (Windows 7, Windows 8, and Windows 10)

Use Web Services to monitor printers on the network.

- Make sure you have installed the Brother software and drivers.
- Verify that the host computer and the Brother machine are on the same subnet, or that the router is correctly configured to pass data between the two devices.
- You must configure the IP address on your Brother machine before you configure this setting.

1. Do one of the following:
   - Windows 7

     Click **(Start)** > **Control Panel** > **Network and Internet** > **View network computers and devices**.

     The machine's Web Services Name appears with the printer icon.

     Right-click the machine you want to install.
   - Windows 8

     Move your mouse to the lower right corner of your desktop. When the menu bar appears, click **Settings** > **Change PC settings** > **Devices** > **Add a device**.

     The machine's Web Services Name appears.
   - Windows 8.1

     Move your mouse to the lower right corner of your desktop. When the menu bar appears, click **Settings** > **Change PC settings** > **PC and devices** > **Devices** > **Add a device**.

     The machine's Web Services Name appears.
   - Windows 10

     Click > **Windows System** > **Control Panel**. In the **Hardware and Sound** group, click **Add a device**.

   - The Web Services Name for the Brother machine is your model name and the MAC Address (Ethernet Address) of your machine (for example, Brother MFC-XXXX (model name) [XXXXXXXXXXXX] (MAC Address / Ethernet Address)).
   - Windows 8/Windows 10

     Move your mouse over the machine name to display the machine's information.

2. Do one of the following:
   - Windows 7

     Click **Install** in the displayed menu.
   - Windows 8/Windows 10

     Select the machine you want to install, and then follow the on-screen instructions.

To uninstall drivers, click **Uninstall** or (**Remove device**).

Related Information

- Web Services for Scanning on Your Network (Windows 7, Windows 8 and Windows 10)

Scan Using Web Services from the Brother Machine (Windows 7, Windows 8 and Windows 10)

If you have installed the driver for scanning via Web Services, you can access the Web Services scanning menu on your Brother machine's LCD.

Certain characters in the messages displayed on the LCD may be replaced with spaces if the language settings of your OS and your Brother machine are different.

>> DCP-L3510CDW/DCP-L3551CDW
>> MFC-L3710CW/MFC-L3735CDN/MFC-L3745CDW/MFC-L3750CDW/MFC-L3770CDW

DCP-L3510CDW/DCP-L3551CDW

1. Load your document.
2. Press (**Scan**).
3. Press ▲ or ▼ to select the `[Web Service]` option, and then press **OK**.
4. Press ▲ or ▼ to select the type of scan you want to do, and then press **OK**.
5. Press ▲ or ▼ to select the destination computer where you want to send the scan, and then press **OK**.
6. Press **Mono Start** or **Colour Start**.

   The machine starts scanning.

MFC-L3710CW/MFC-L3735CDN/MFC-L3745CDW/MFC-L3750CDW/MFC-L3770CDW

1. Load your document.
2. Press `[Scan]` > `[WS Scan]`.
3. Select the type of scan.
4. Select the computer name you want to send data.
5. Press `[Start]`.

   The machine starts scanning.

If you are requested to select a scanning application, select Windows Fax and Scan or Windows Photo Gallery from the list.

Related Information

- Web Services for Scanning on Your Network (Windows 7, Windows 8 and Windows 10)

Configure Scan Settings for Web Services

1. Do one of the following:
   - Windows 7

     Click **(Start)** > **Devices and Printers**.
   - Windows 8

     Move your mouse to the lower right corner of your desktop. When the menu bar appears, click **Settings**, and then click **Control Panel**. In the **Hardware and Sound** group, click **View devices and printers**.
   - Windows 10

     Click > **Windows System** > **Control Panel**. In the **Hardware and Sound** group, click **View devices and printers**.
2. Right-click the machine icon, and then select **Scan profiles...**. The **Scan Profiles** dialog box appears.
3. Select the scan profile you want to use.
4. Make sure the scanner selected in the **Scanner** list is a Brother machine that supports Web Services for scanning, and then click the **Set as Default** button.
5. Click **Edit...**.

   The **Edit Default Profile** dialog box appears.
6. Select the **Source**, **Paper size**, **Color format**, **File type**, **Resolution (DPI)**, **Brightness** and **Contrast** settings.
7. Click the **Save Profile** button.

   These settings will be applied when you scan using the Web Services protocol.

If you are requested to select a scanning application, select Windows Fax and Scan from the list.

Related Information

- Web Services for Scanning on Your Network (Windows 7, Windows 8 and Windows 10)

Change Scan Button Settings from ControlCenter4 (Windows)

1. Click the (**ControlCenter4**) icon in the task tray, and then click **Open**.
2. Click the **Device Settings** tab.
3. Click the **Device Scan Settings** button.

   The **Device Scan Settings** dialog box appears.

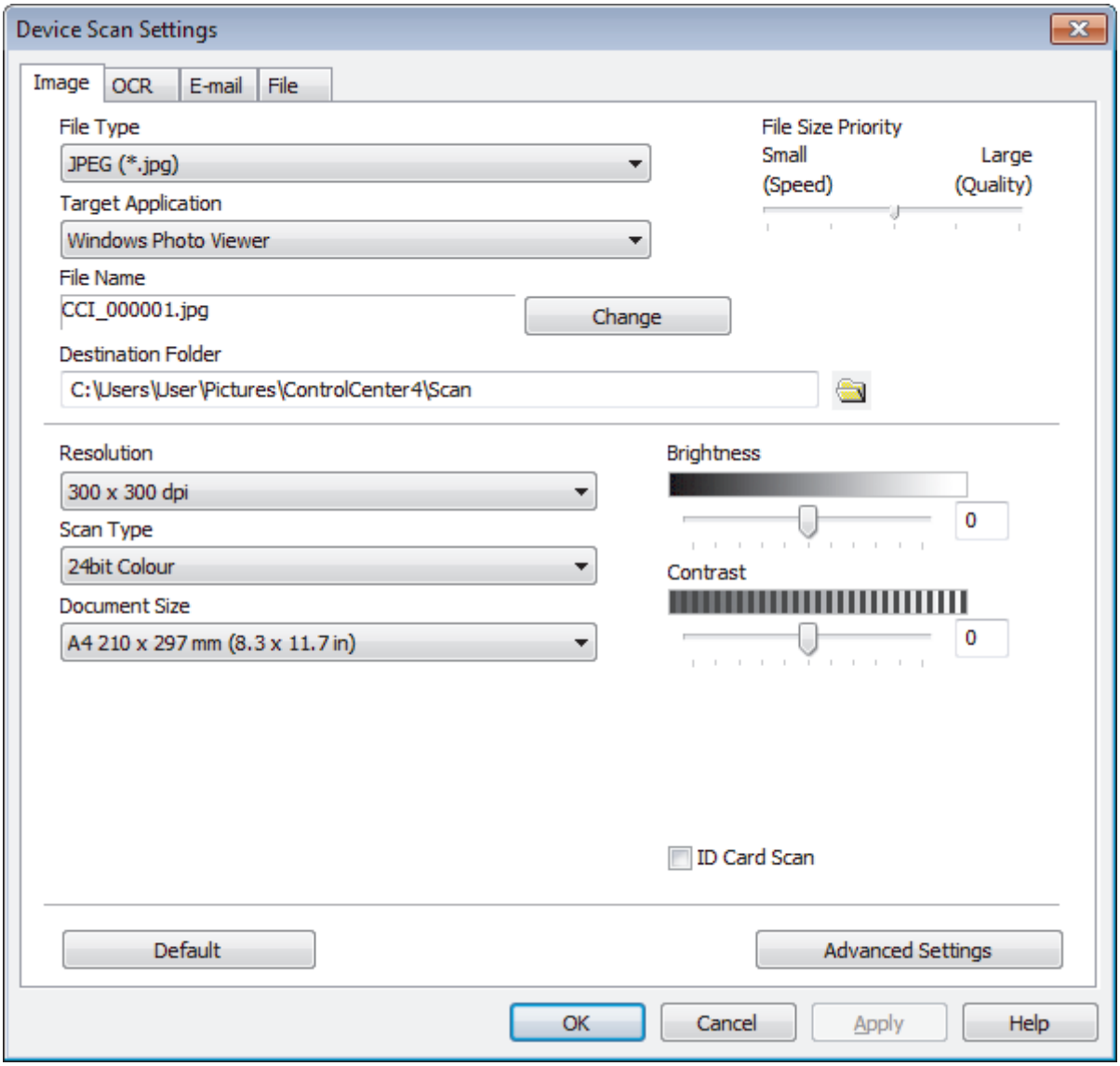

4. Click the tab for the Scan to action you want to change (**Image**, **OCR**, **E-mail**, or **File**).
5. Change the settings as needed.
6. Click **OK**.

Each tab represents one of the scanning destinations, as outlined in the table below.

Change your Scan to settings by clicking on the corresponding tab and customising the setting you want.

Tab Name	Corresponding Feature
Image	Scan to Image
OCR	Scan to OCR
E-mail	Scan to Email
File	Scan to File

Settings	Applicable Features			
	Image	**OCR**	**E-mail**	**File**
File Type	Yes	Yes	Yes	Yes
Target Application	Yes	Yes	-	-
OCR Language	-	Yes	-	-
File Name	Yes	Yes	Yes	Yes
Destination Folder or **Scan Location**	Yes	Yes	Yes	Yes
Show Save As Window	-	-	-	Yes
Show Folder	-	-	-	Yes
File Size Priority	Yes	-	Yes	Yes
Resolution	Yes	Yes	Yes	Yes
Scan Type	Yes	Yes	Yes	Yes
Document Size	Yes	Yes	Yes	Yes
Brightness	Yes	Yes	Yes	Yes
Contrast	Yes	Yes	Yes	Yes
ID Card Scan	Yes	Yes	Yes	Yes
Advanced Settings	Yes	Yes	Yes	Yes
Default	Yes	Yes	Yes	Yes

File Type

Select the file type you want to use for the scanned data.

Target Application

Select the destination application from the drop-down list.

OCR Language

Set the OCR language to match the language of the scanned document's text.

File Name

Click **Change** to change the file name's prefix.

Destination Folder

Click the folder icon to browse and select the folder where you want to save your scanned documents.

Scan Location

Select the **Folder** or **SharePoint** radio button to specify the destination where you want to save your scanned documents.

Show Save As Window

Select this option to specify the scanned image's destination every time you scan.

Show Folder

Select this option to automatically display the destination folder after scanning.

File Size Priority

Adjust the data compression ratio of the scanned image. Change the file size by moving the **File Size Priority** slider to the right or left.

Resolution

Select a scanning resolution from the **Resolution** drop-down list. Higher resolutions take more memory and transfer time, but produce a finer scanned image.

Scan Type

Select from a range of scan colour depths.

- **Auto**

  Use for any type of document. This mode automatically picks an appropriate colour depth for the document.
- **Black & White**

  Use for text or line art images.
- **Grey (Error Diffusion)**

  Use for photographic images or graphics. (Error Diffusion is a method for creating simulated grey images without using true grey dots. Black dots are put in a specific pattern to give a grey appearance.)
- **True Grey**

  Use for photographic images or graphics. This mode is more accurate because it uses up to 256 shades of grey.
- **24bit Colour**

  Use to create an image with the most accurate colour reproduction. This mode uses up to 16.8 million colours to scan the image, but it requires the most memory and has the longest transfer time.

Document Size

Select the exact size of your document from the **Document Size** drop-down list.

- If you select the **1 to 2 (A4)** option, the scanned image will be divided into two A5-size documents.

Brightness

Set the **Brightness** level by dragging the slider to the right or left to lighten or darken the image. If the scanned image is too light, set a lower brightness level and scan the document again. If the image is too dark, set a higher brightness level and scan the document again. You can also type a value into the field to set the **Brightness** level.

Contrast

Increase or decrease the **Contrast** level by moving the slider to the right or left. An increase emphasises dark and light areas of the image, while a decrease reveals more details in grey areas. You can also type a value into the field to set the **Contrast** level.

ID Card Scan

Select this check box to scan both sides of an identification card onto one page.

Advanced Settings

Configure advanced settings by clicking the **Advanced Settings** button in the Scan Settings dialog box.

- **Remove Bleed-through / Pattern**

  Remove Background Colour

  Remove the base colour of documents to make the scanned data more legible.
- **Rotate Image**

  Rotate the scanned image.
- **Skip Blank Page**

  Remove the document's blank pages from the scanning results.
- **Display Scanning Results**

  Show on your computer screen the number of total pages saved, and blank pages skipped.
- **Auto Deskew**

  Set the machine to automatically correct a skewed document.

Default

Select this option to restore all settings to their factory setting values.

Related Information

- Scan Using the Scan Button on Your Brother Machine

Related Topics:

- Scan Photos and Graphics
- Save Scanned Data to a Folder as a PDF File
- Scan to an Editable Text File (OCR)
- Scan to Email Attachment

Change Scan Button Settings from Brother iPrint&Scan (Mac)

1. In the **Finder** menu bar, click **Go** > **Applications**, and then double-click the iPrint&Scan icon.

   The Brother iPrint&Scan screen appears.
2. If your Brother machine is not selected, click the **Select your Machine** button, and then follow the on-screen instructions to select your Brother machine.
3. Click the **Machine Scan Settings** button, and then follow the on-screen instructions to change the scan settings.

Related Information

- Scan Using the Scan Button on Your Brother Machine

Related Topics:

- Scan Using Brother iPrint&Scan (Mac)
- Scan Photos and Graphics
- Save Scanned Data to a Folder as a PDF File
- Scan to an Editable Text File (OCR)
- Scan to Email Attachment

Configure Certificate for Signed PDF

If you select Signed PDF for Scan features, you must configure a certificate on your machine using Web Based Management.

To use Signed PDF, you must install a certificate on your machine and your computer.

1. Start your web browser.

   Type "https://machine's IP address" in your browser's address bar (where "machine's IP address" is the IP address of the machine or the print server name). For example: https://192.168.1.2

   If the machine prompts you for a password, type it, and then click .

2. Click the **Administrator** tab.
3. Click the **Signed PDF** menu in the left navigation bar.

   The Signed PDF configuration dialog box appears.

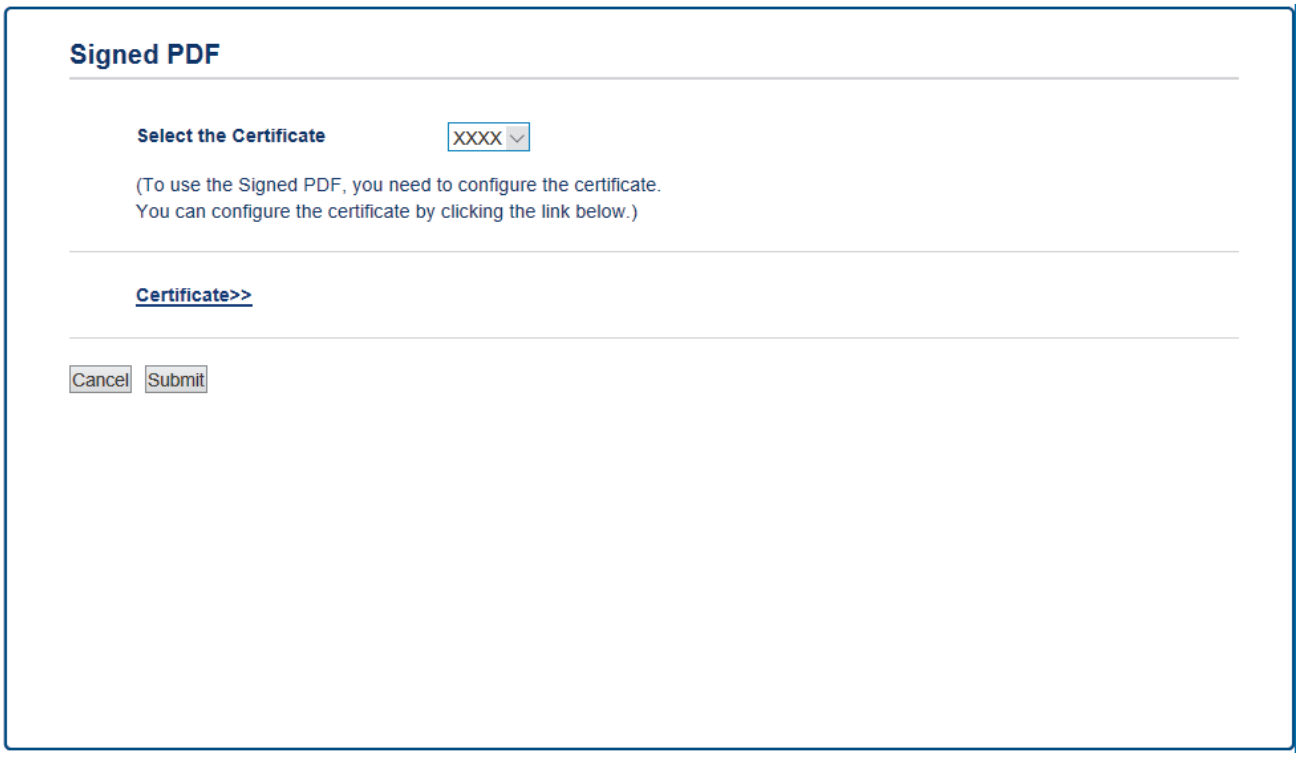

4. Click the **Select the Certificate** drop-down list, and then select the certificate.
5. Click **Submit**.

Related Information

- Scan Using the Scan Button on Your Brother Machine

Disable Scanning from Your Computer

You can disable the ability to scan from your computer. Set the pull scan setting using Web Based Management.

1. Start your web browser.

   Type "https://machine's IP address" in your browser's address bar (where "machine's IP address" is the IP address of the machine or the print server name). For example: https://192.168.1.2

   If the machine prompts you for a password, type it, and then click .
2. Click the **Scan** tab.
3. Click the **Scan from PC** menu in the left navigation bar.
4. In the **Pull Scan** field, click **Disabled**.
5. Click **Submit**.

Related Information

- Scan Using the Scan Button on Your Brother Machine

Scan from Your Computer (Windows)

There are several ways you can use your computer to scan photos and documents on your Brother machine. Use the software applications provided by Brother, or use your favourite scanning application.

- Scan Using ControlCenter4 Home Mode (Windows)
- Scan Using ControlCenter4 Advanced Mode (Windows)
- Scan Using Nuance™ PaperPort™ 14SE or Other Windows Applications
- Scan Using Windows Fax and Scan

Scan Using ControlCenter4 Home Mode (Windows)

Use ControlCenter4 Home Mode to access your machine's main features.

- Scan Using ControlCenter4 Home Mode (Windows)
- Save Scanned Data to a Folder as a PDF File Using ControlCenter4 Home Mode (Windows)
- Scan Both Sides of a Document Automatically Using ControlCenter4 Home Mode (Windows)
- Scan Settings for ControlCenter4 Home Mode (Windows)

Scan Using ControlCenter4 Home Mode (Windows)

Select **Home Mode** as the mode setting for ControlCenter4.

1. Load your document.
2. Click the (**ControlCenter4**) icon in the task tray, and then click **Open**.
3. Click the **Scan** tab.

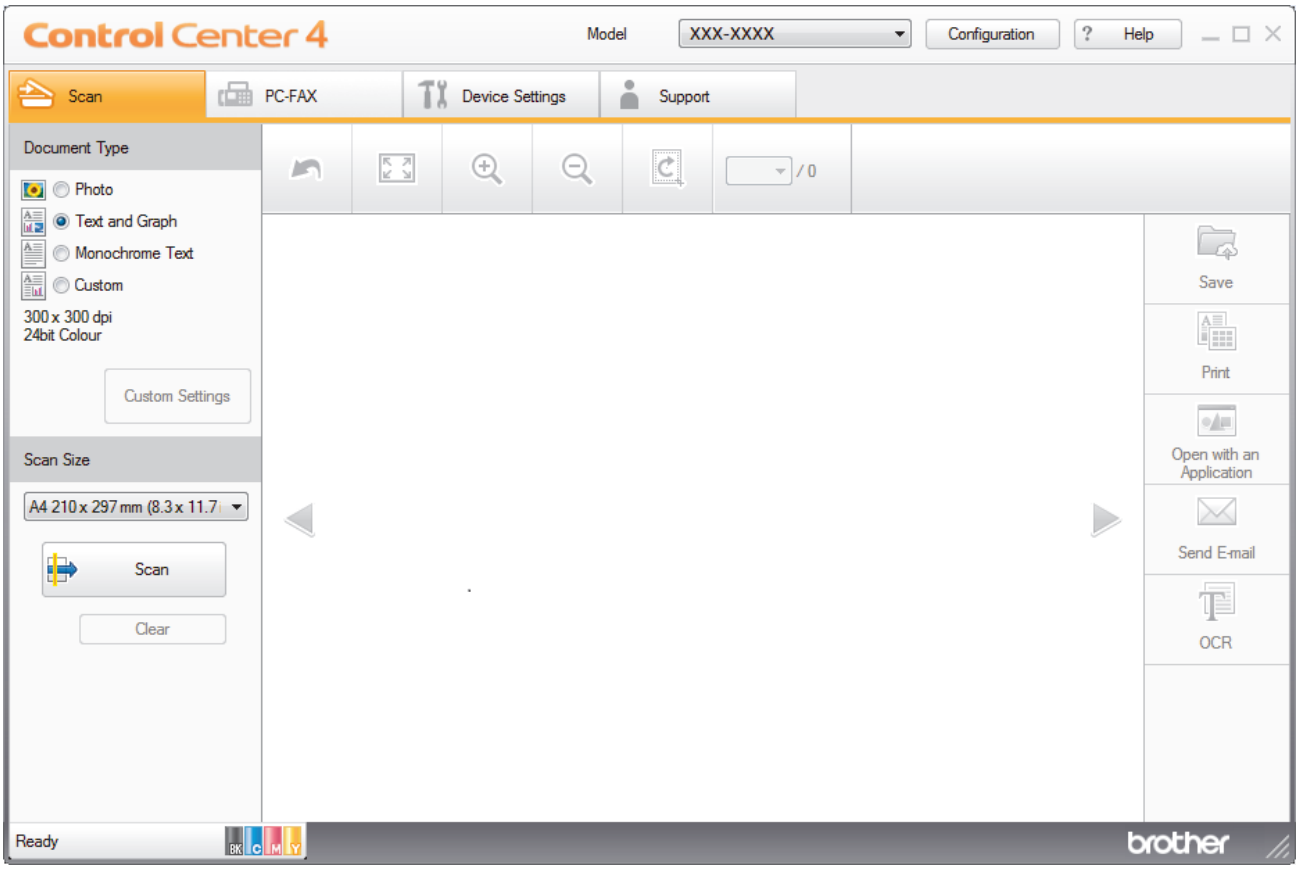

4. Select the **Document Type**.
5. Change the document's **Scan Size**, if needed.
6. Click (**Scan**).

   The machine starts scanning, and the scanned image appears in the image viewer.
7. Click the left or right arrow buttons to preview each scanned page.
8. Crop the scanned image, if needed.
9. Do one of the following:
   - Click (**Save**) to save scanned data.
   - Click (**Print**) to print scanned data.
   - Click (**Open with an Application**) to open scanned data in another application.
   - Click (**Send E-mail**) to attach scanned data to an email.
   - Click (**OCR**) to convert your scanned document to an editable text file. (available only for certain models)

Related Information

- Scan Using ControlCenter4 Home Mode (Windows)
  - Select Document Type Using ControlCenter4 Home Mode (Windows)
  - Change Scan Size Using ControlCenter4 Home Mode (Windows)
  - Crop a Scanned Image Using ControlCenter4 Home Mode (Windows)
  - Print Scanned Data Using ControlCenter4 Home Mode (Windows)
  - Scan to an Application Using ControlCenter4 Home Mode (Windows)

Select Document Type Using ControlCenter4 Home Mode (Windows)

- Select the **Document Type** option that matches the type of original you want to scan.

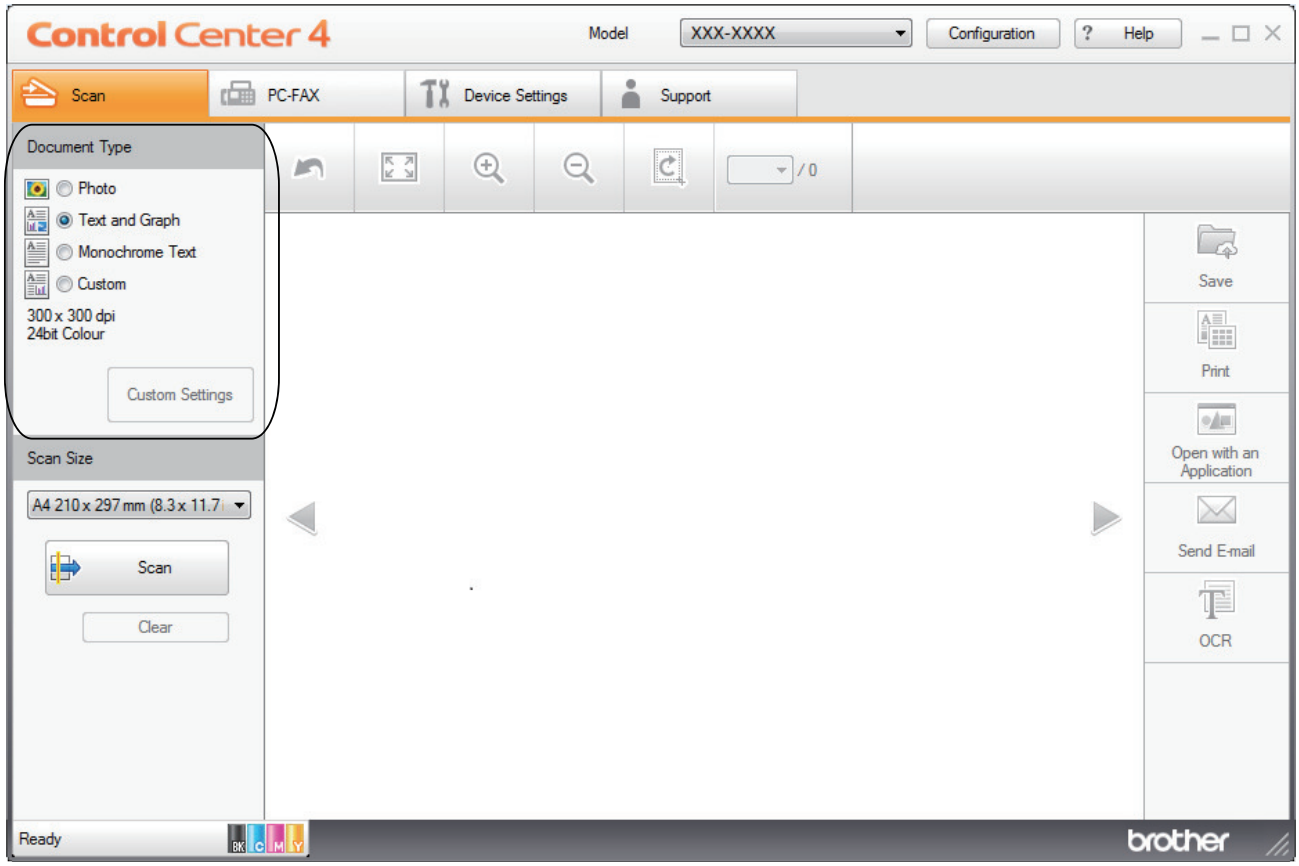

Option	Description
Photo	**600 x 600 dpi 24bit Colour**
Text and Graph	**300 x 300 dpi 24bit Colour**
Monochrome Text	**200 x 200 dpi Black & White**
Custom	**300 x 300 dpi** (**24bit Colour** as default) Select the scan settings you want from the **Custom Settings** button.

Related Information

- Scan Using ControlCenter4 Home Mode (Windows)
  - Custom Scan Settings (Windows)

Custom Scan Settings (Windows)

Select **Custom** in the **Document Type** list to change advanced scan settings.

- Select **Custom**, and then click the **Custom Settings** button.

  The **Custom Scan Settings** dialog box appears.

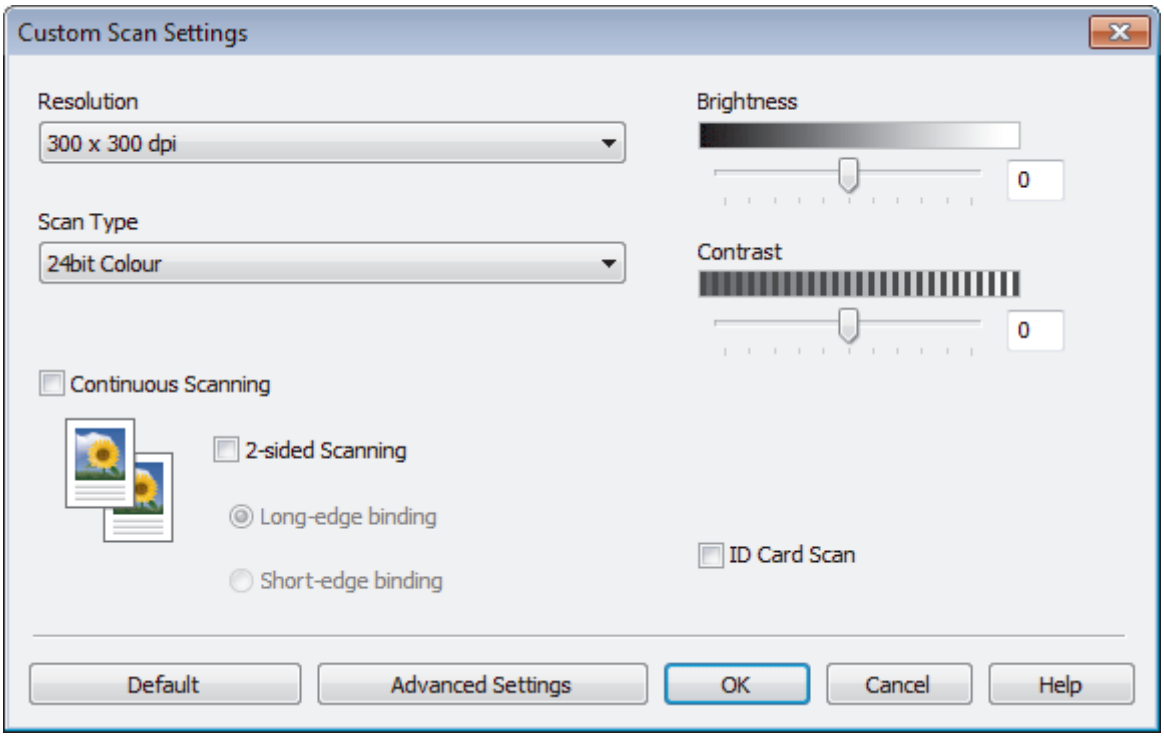

You can change the following settings:

Resolution

Select a scanning resolution from the **Resolution** drop-down list. Higher resolutions take more memory and transfer time, but produce a finer scanned image.

Scan Type

Select from a range of scan colour depths.

- **Auto**

  Use for any type of document. This mode automatically picks an appropriate colour depth for the document.

- **Black & White**

  Use for text or line art images.

- **Grey (Error Diffusion)**

  Use for photographic images or graphics. (Error Diffusion is a method for creating simulated grey images without using true grey dots. Black dots are put in a specific pattern to give a grey appearance.)

- **True Grey**

  Use for photographic images or graphics. This mode is more accurate because it uses up to 256 shades of grey.

- **24bit Colour**

  Use to create an image with the most accurate colour reproduction. This mode uses up to 16.8 million colours to scan the image, but it requires the most memory and has the longest transfer time.

Brightness

Set the **Brightness** level by dragging the slider to the right or left to lighten or darken the image. If the scanned image is too light, set a lower brightness level and scan the document again. If the image is too dark, set a higher brightness level and scan the document again. You can also type a value into the field to set the **Brightness** level.

Contrast

Increase or decrease the **Contrast** level by moving the slider to the right or left. An increase emphasises dark and light areas of the image, while a decrease reveals more details in grey areas. You can also type a value into the field to set the **Contrast** level.

Continuous Scanning

Select this option to scan multiple pages. After a page is scanned, select either continue scanning or finish.

2-sided Scanning (MFC-L3770CDW)

Select this check box to scan both sides of the document. When using the Automatic 2-sided Scan feature, you must select the **Long-edge binding** or **Short-edge binding** option, depending on the layout of your original, to make sure the data file you create appears correctly.

ID Card Scan

Select this check box to scan both sides of an identification card onto one page.

Advanced Settings

Configure advanced settings by clicking the **Advanced Settings** button in the Scan Settings dialog box.

- **Remove Bleed-through / Pattern**
  - **Remove Background Colour**

    Remove the base colour of documents to make the scanned data more legible.
- **Rotate Image**

  Rotate the scanned image.
- **Skip Blank Page**

  Remove the document's blank pages from the scanning results.
- **Display Scanning Results**

  Show on your computer screen the number of total pages saved, and blank pages skipped.
- **Auto Deskew**

  Set the machine to automatically correct a skewed document.

Related Information

- Select Document Type Using ControlCenter4 Home Mode (Windows)

Change Scan Size Using ControlCenter4 Home Mode (Windows)

For faster scan speeds, select the exact size of your document from the **Scan Size** drop-down menu.

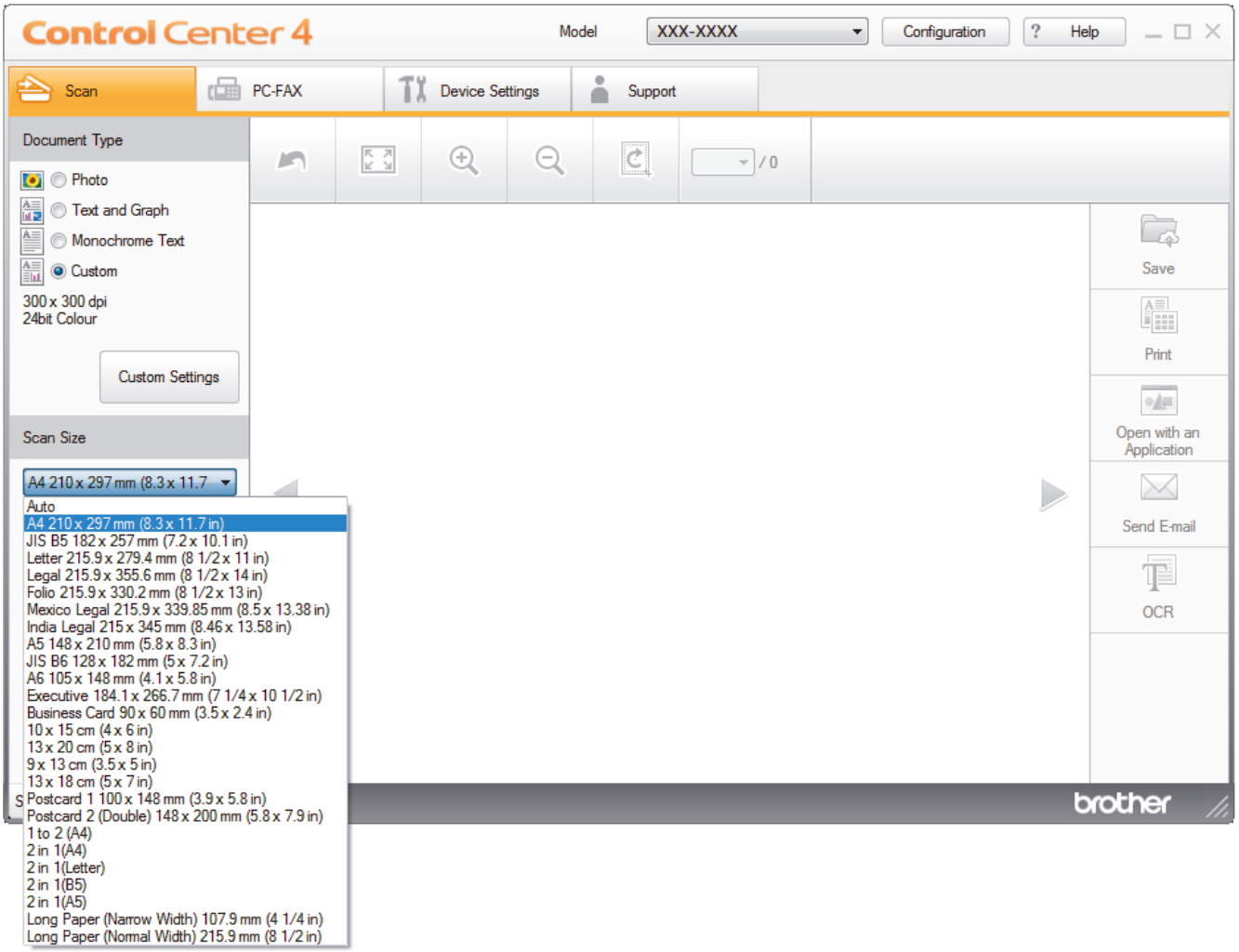

Related Information

- Scan Using ControlCenter4 Home Mode (Windows)

Crop a Scanned Image Using ControlCenter4 Home Mode (Windows)

The crop tool on the Image Editing Toolbar lets you trim unwanted areas from your scanned image. Use the **Zoom In** and **Zoom Out** tools to help view the image to be cropped.

Image Editing Toolbar

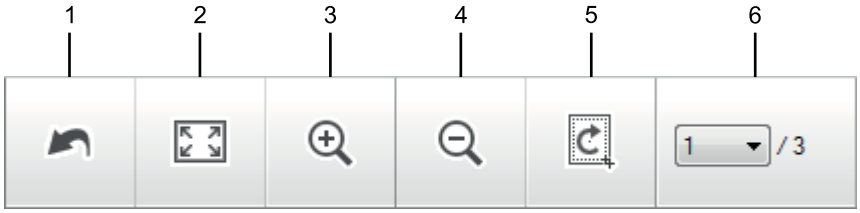

1. **Restart**

   Cancels all the edits applied to the selected image. The edited image returns to its original state.
2. **Fit to Window**

   Displays the scanned image so that the entire image fits in the window.
3. **Zoom In**

   Zooms in on the scanned image.
4. **Zoom Out**

   Zooms out of the scanned image.
5. **Crop and Edit**

   Removes the outer parts of the image. Click the **Crop and Edit** button, and then change the frame to contain the area you want to keep after cropping.
6. **Page Counter**

   Indicates the page number of the scanned page currently shown in the image viewer. To display a different page, select the desired page number from the drop-down page number list.

If you have scanned multiple pages, you can see the next or previous scanned page by clicking the left or right arrow buttons in the preview window.

1. Scan a document.
2. Click (**Crop and Edit**) to edit the scanned image.

   The **Crop and Edit - ControlCenter4** window appears.

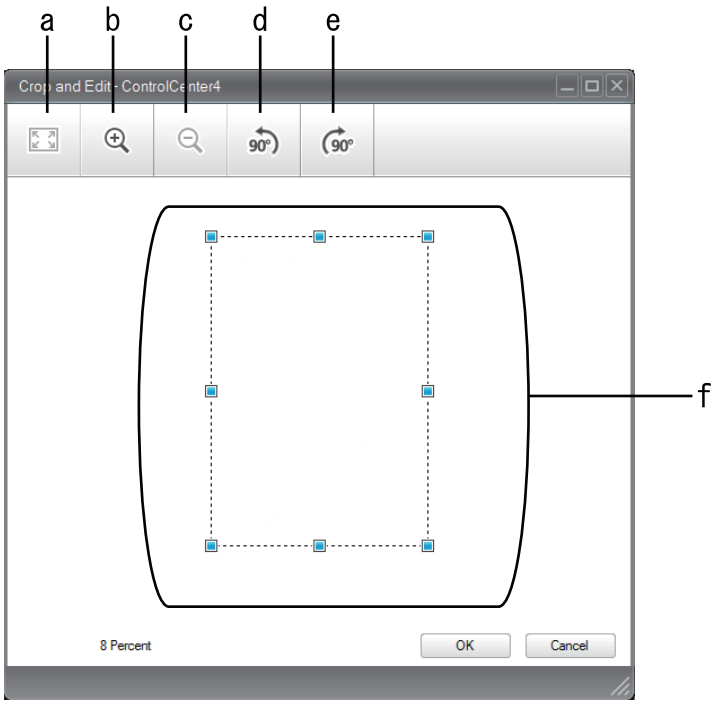

a. Expands the scanned image so that the entire image fits in the window.
b. Zooms in on the image.
c. Zooms out of the image.
d. Rotates the image counter-clockwise 90 degrees.
e. Rotates the image clockwise 90 degrees.
f. Click and drag the frame to adjust the area to be cropped.

3. Click **OK**.
   The edited image appears in the image viewer.

Related Information

- Scan Using ControlCenter4 Home Mode (Windows)

Print Scanned Data Using ControlCenter4 Home Mode (Windows)

Scan a document on your Brother machine, and then print copies using the printer driver features that are available in ControlCenter4.

1. Scan a document.
2. Click **Print**.

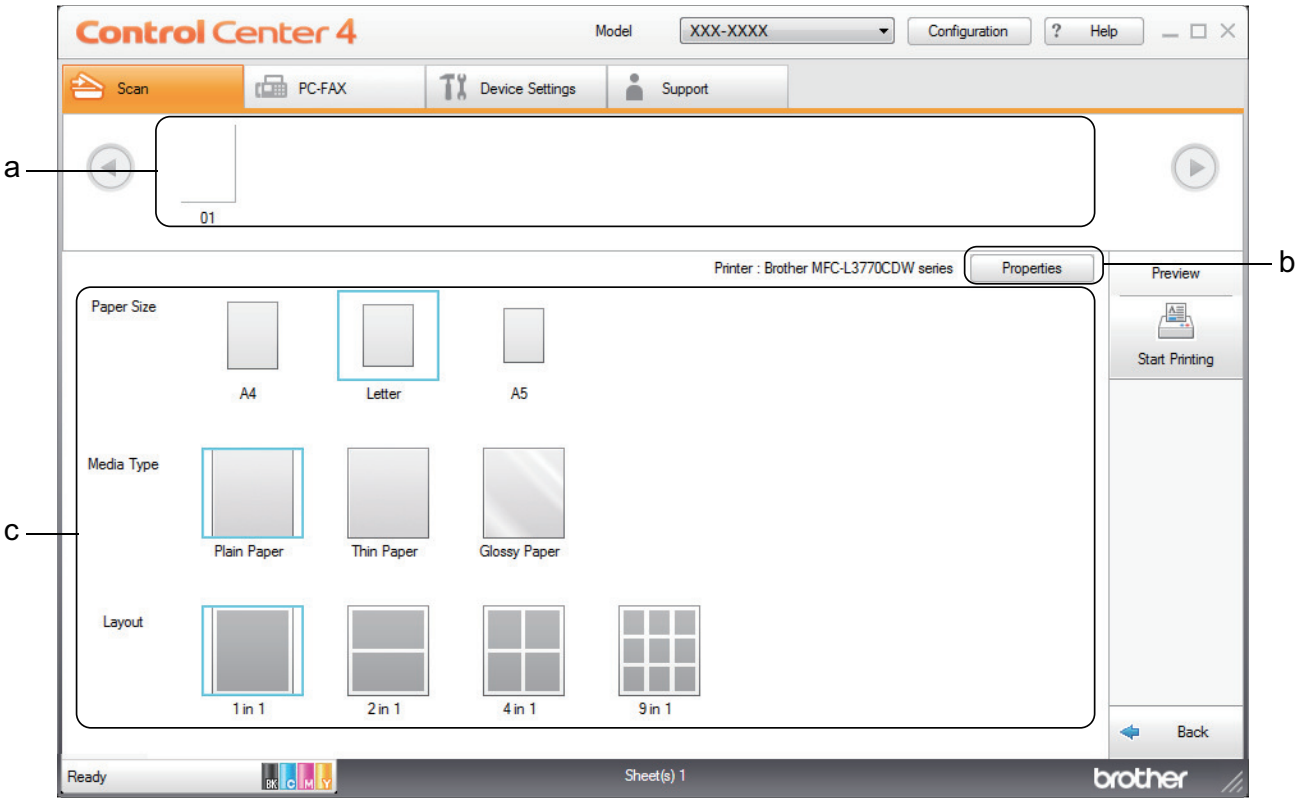

a. Shows which images are currently selected.

b. Click the **Properties** button to change specific printer settings.

c. Select the **Paper Size**, **Media Type** and **Layout** options. The current settings are enclosed in a blue square.

3. Configure the print settings, and then click the **Start Printing** button.

Related Information

- Scan Using ControlCenter4 Home Mode (Windows)

Scan to an Application Using ControlCenter4 Home Mode (Windows)

The **Open with an Application** button lets you scan an image directly into your graphics application for editing.

Select **Home Mode** as the mode setting for ControlCenter4.

1. Load your document.
2. Click the (**ControlCenter4**) icon in the task tray, and then click **Open**.
3. Click the **Scan** tab.

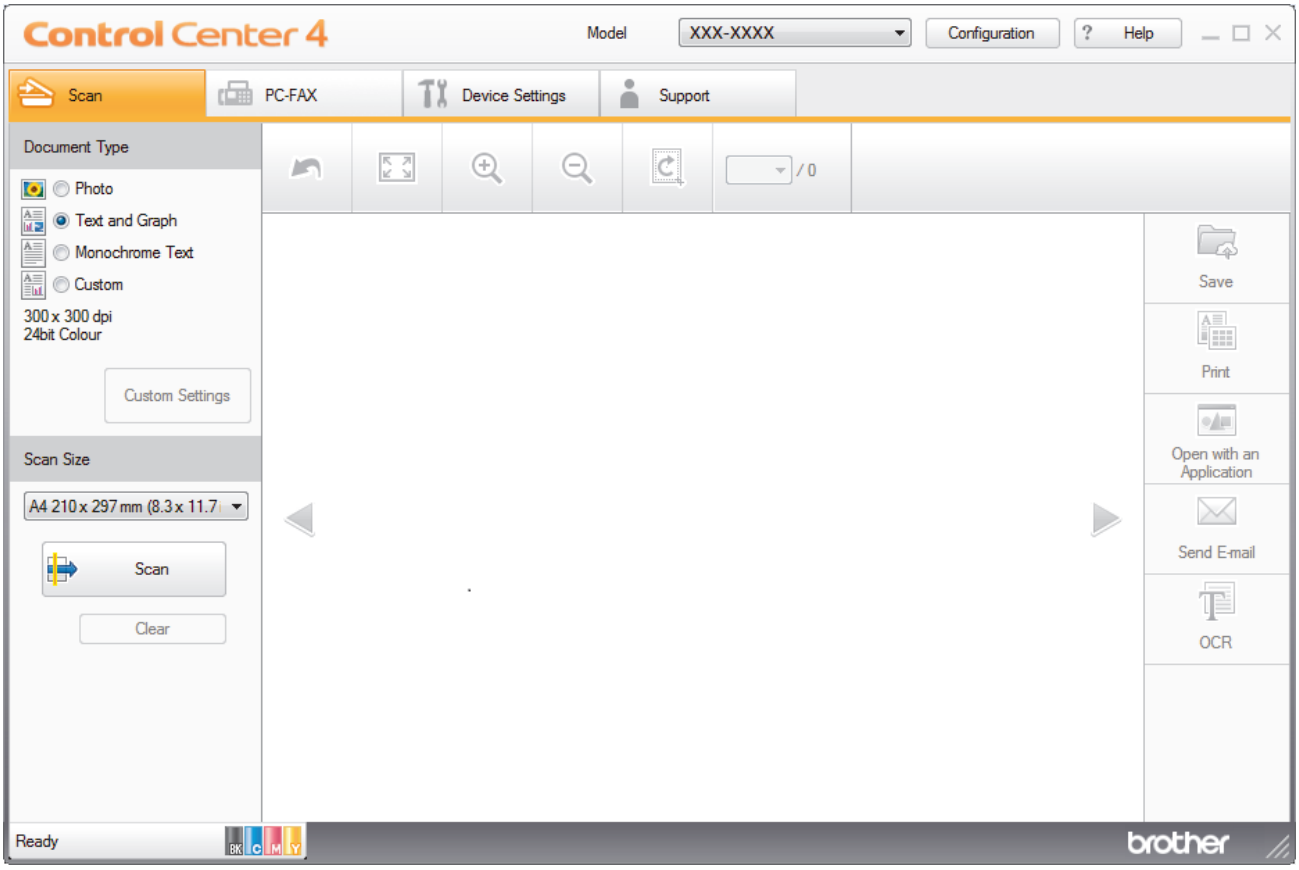

4. Select the **Document Type**.
5. Change the size of your document, if needed.
6. Click (**Scan**).

   The machine starts scanning, and the scanned image appears in the image viewer.
7. Click the left or right arrow buttons to preview each scanned page.
8. Crop the scanned image, if needed.
9. Click the **Open with an Application** button.
10. Select the application from the drop-down list, and then click **OK**.

    The image opens in the application you have selected.

Related Information

- Scan Using ControlCenter4 Home Mode (Windows)

Save Scanned Data to a Folder as a PDF File Using ControlCenter4 Home Mode (Windows)

Select **Home Mode** as the mode setting for ControlCenter4.

1. Load your document.
2. Click the (**ControlCenter4**) icon in the task tray, and then click **Open**.
3. Click the **Scan** tab.

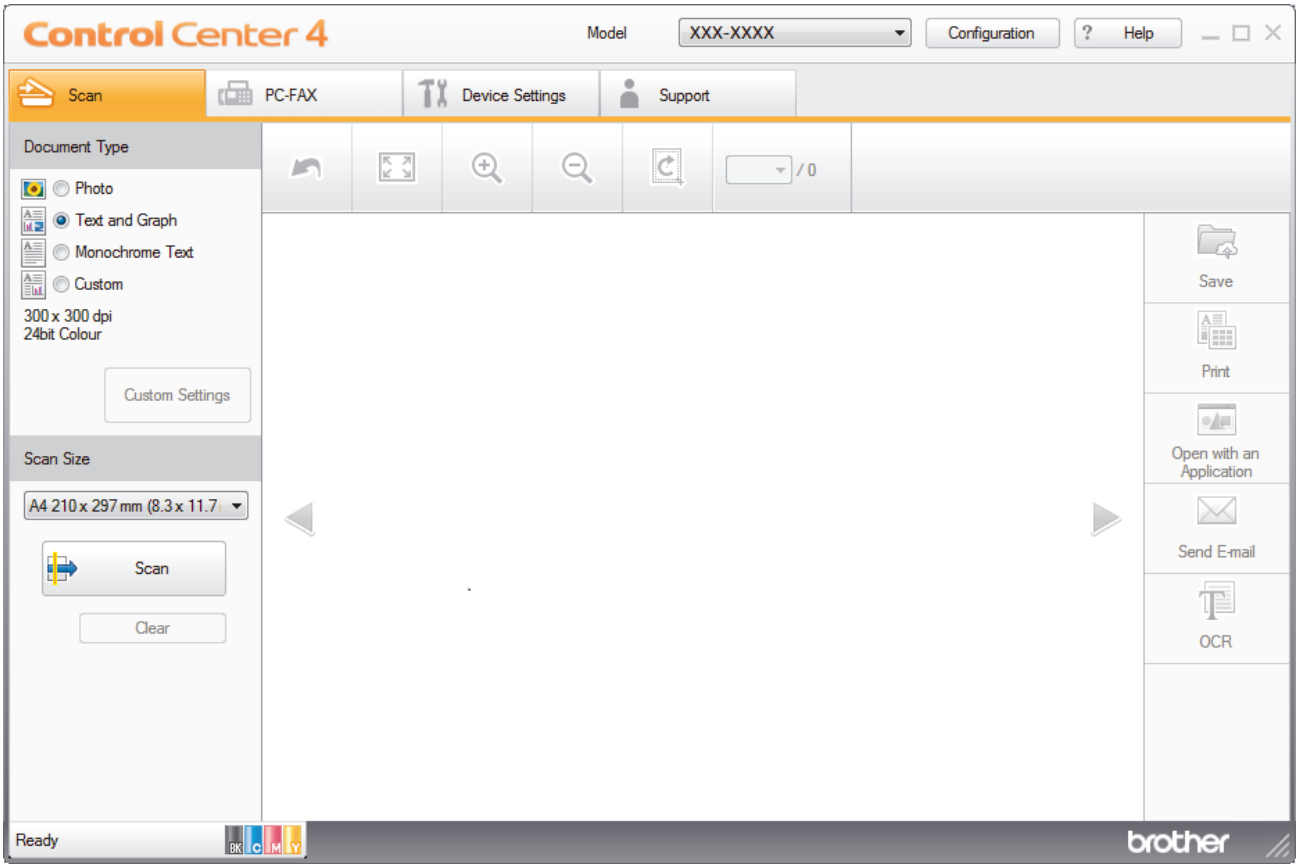

4. Select the **Document Type**.
5. Change the size of your document, if needed.
6. Click (**Scan**).

   The machine starts scanning, and the scanned image appears in the image viewer.
7. Click the left or right arrow buttons to preview each scanned page.
8. Click **Save**.

   The **Save** dialog box appears.
9. Click the **File Type** drop-down list, and then select a PDF file.

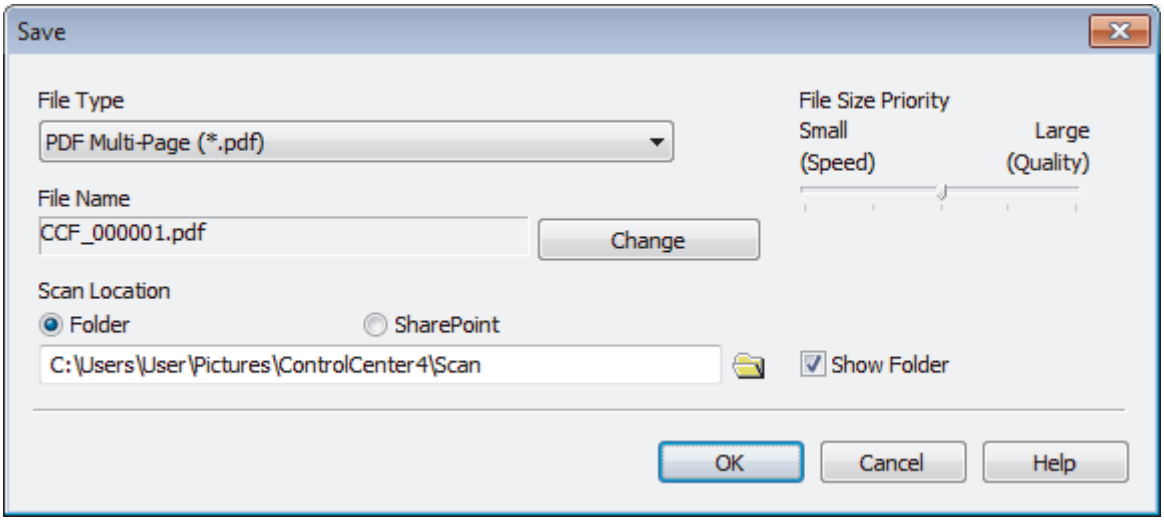

To save the document as a password-protected PDF, select **Secure PDF Single-Page (*.pdf)** or **Secure PDF Multi-Page (*.pdf)** from the **File Type** drop-down list, click , and then type the password.

10. To change the file name, click the **Change** button, if needed.
11. Click the folder icon to browse and select the folder where you want to save your scanned documents.
12. Click **OK**.

    The scanned document is saved to the destination folder as a PDF.

Related Information

- Scan Using ControlCenter4 Home Mode (Windows)

Scan Both Sides of a Document Automatically Using ControlCenter4 Home Mode (Windows)

Related Models: MFC-L3770CDW

Select **Home Mode** as the mode setting for ControlCenter4.

1. Load documents in the ADF.

To scan both sides of a document automatically, you must use the ADF, not the flatbed scanner glass.

2. Click the (**ControlCenter4**) icon in the task tray, and then click **Open**.
3. Click the **Scan** tab.

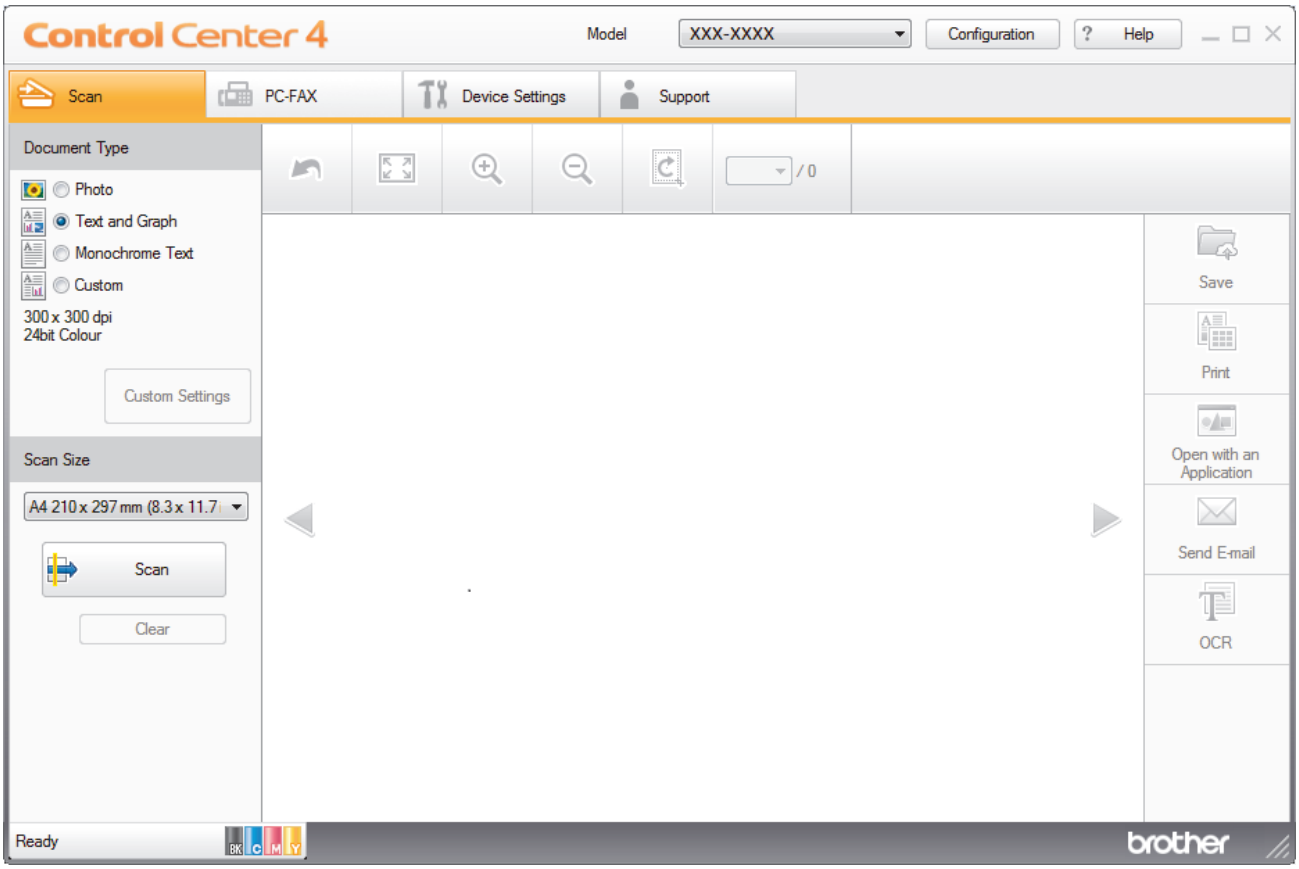

4. Under **Document Type**, select **Custom**, and then click the **Custom Settings** button.
   The **Custom Scan Settings** dialog box appears.
5. Select the **2-sided Scanning** check box.
6. Select the **Long-edge binding** or **Short-edge binding** option, depending on the Original layout.
7. Configure other **Custom Scan Settings**, if needed.
8. Click **OK**.
9. Click (**Scan**).
   The machine starts scanning, and the scanned image appears in the image viewer.
10. Click the left or right arrow buttons to preview each scanned page.
11. Do one of the following:
    - Click (**Save**) to save scanned data.

- Click (**Print**) to print scanned data.
- Click (**Open with an Application**) to open scanned data in another application.
- Click (**Send E-mail**) to attach scanned data to an email.
- Click (**OCR**) to convert your scanned document to an editable text file. (available only for certain models)

Related Information

- Scan Using ControlCenter4 Home Mode (Windows)

Scan Settings for ControlCenter4 Home Mode (Windows)

Settings	Applicable Features			
	Open with an Application	**OCR**	**Send E-mail**	**Save**
File Type	-	Yes	Yes	Yes
Target Application	Yes	Yes	-	-
OCR Language	-	Yes	-	-
File Name	-	-	-	Yes
Scan Location	-	-	-	Yes
Show Folder	-	-	-	Yes
File Size Priority	-	-	Yes	Yes

File Type

Select the file type you want to use for the scanned data.

For Send E-mail and Save

- **Windows Bitmap (*.bmp)**
- **JPEG (*.jpg)** (recommended for most users when scanning pictures)
- **TIFF Single-Page (*.tif)**
- **TIFF Multi-Page (*.tif)**
- **Portable Network Graphics (*.png)**
- **PDF Single-Page (*.pdf)** (recommended for scanning and sharing documents)
- **PDF Multi-Page (*.pdf)** (recommended for scanning and sharing documents)
- **PDF/A Single-Page (*.pdf)** (recommended for scanning and sharing documents)
- **PDF/A Multi-Page (*.pdf)** (recommended for scanning and sharing documents)
- **High Compression PDF Single-Page (*.pdf)**
- **High Compression PDF Multi-Page (*.pdf)**
- **Secure PDF Single-Page (*.pdf)**
- **Secure PDF Multi-Page (*.pdf)**
- **Searchable PDF Single-Page (*.pdf)**
- **Searchable PDF Multi-Page (*.pdf)**
- **XML Paper Specification (*.xps)** (the XML Paper Specification is available for Windows 7, Windows 8 and Windows 10, and when using applications that support XML Paper Specification files)
- **Microsoft Office Word (*.docx)** (Available only for certain models)
- **Microsoft Office PowerPoint (*.pptx)** (Available only for certain models)
- **Microsoft Office Excel (*.xlsx)**(Available only for certain models)

For OCR

- **HTML 3.2 (*.htm)**
- **HTML 4.0 (*.htm)**
- **Microsoft Excel 2003, XP (*.xls)**
- **RTF Word 2000 (*.rtf)**
- **WordPad (*.rtf)**
- **WordPerfect 9, 10 (*.wpd)**
- **Text (*.txt)**
- **Searchable PDF Single-Page (*.pdf)**
- **Searchable PDF Multi-Page (*.pdf)**

Target Application

Select the destination application from the drop-down list.

OCR Language

Set the optical character recognition (OCR) language to match the language of the scanned document's text.

File Name

Click **Change** to change the file name's prefix.

Scan Location

Select the **Folder** or **SharePoint** radio button to specify the destination where you want to save your scanned documents.

Show Folder

Select this option to automatically display the destination folder after scanning.

File Size Priority

Adjust the data compression ratio of the scanned image. Change the file size by moving the **File Size Priority** slider to the right or left.

Custom Settings

Select the **Custom** option, click the **Custom Settings** button, and then change settings.

Scan Size

Select the exact size of your document from the **Scan Size** drop-down menu.

Related Information

- Scan Using ControlCenter4 Home Mode (Windows)

Scan Using ControlCenter4 Advanced Mode (Windows)

ControlCenter4 Advanced Mode gives you more control over the details of your machine's features and allows you to customise one-button scan actions.

- Scan Photos and Graphics Using ControlCenter4 Advanced Mode (Windows)
- Save Scanned Data to a Folder as a PDF File Using ControlCenter4 Advanced Mode (Windows)
- Scan Both Sides of a Document Automatically Using ControlCenter4 Advanced Mode (Windows)
- Scan Both Sides of an ID Card Using ControlCenter4 Advanced Mode (Windows)
- Scan to Email Attachment Using ControlCenter4 Advanced Mode (Windows)
- Scan to an Editable Text File (OCR) Using ControlCenter4 Advanced Mode (Windows)
- Scan Settings for ControlCenter4 Advanced Mode (Windows)

Scan Photos and Graphics Using ControlCenter4 Advanced Mode (Windows)

Send scanned photos or graphics directly to your computer.

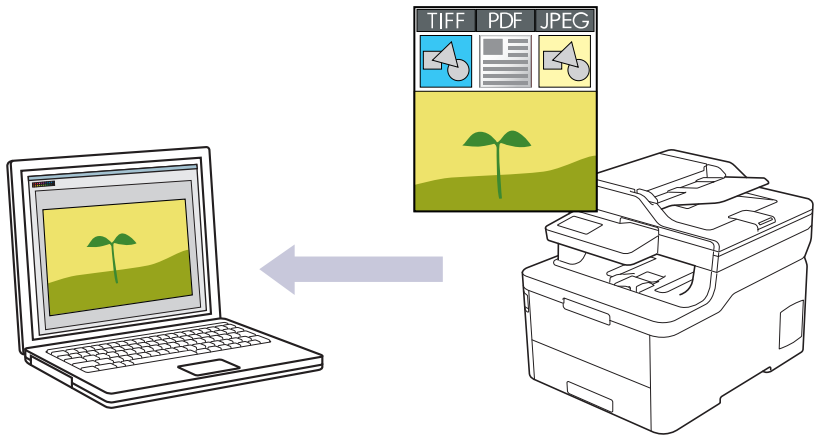

Select **Advanced Mode** as the mode setting for ControlCenter4.

1. Load your document.
2. Click the (**ControlCenter4**) icon in the task tray, and then click **Open**.
3. Click the **Scan** tab.

4. Click the **Image** button.

   The scan settings dialog box appears.

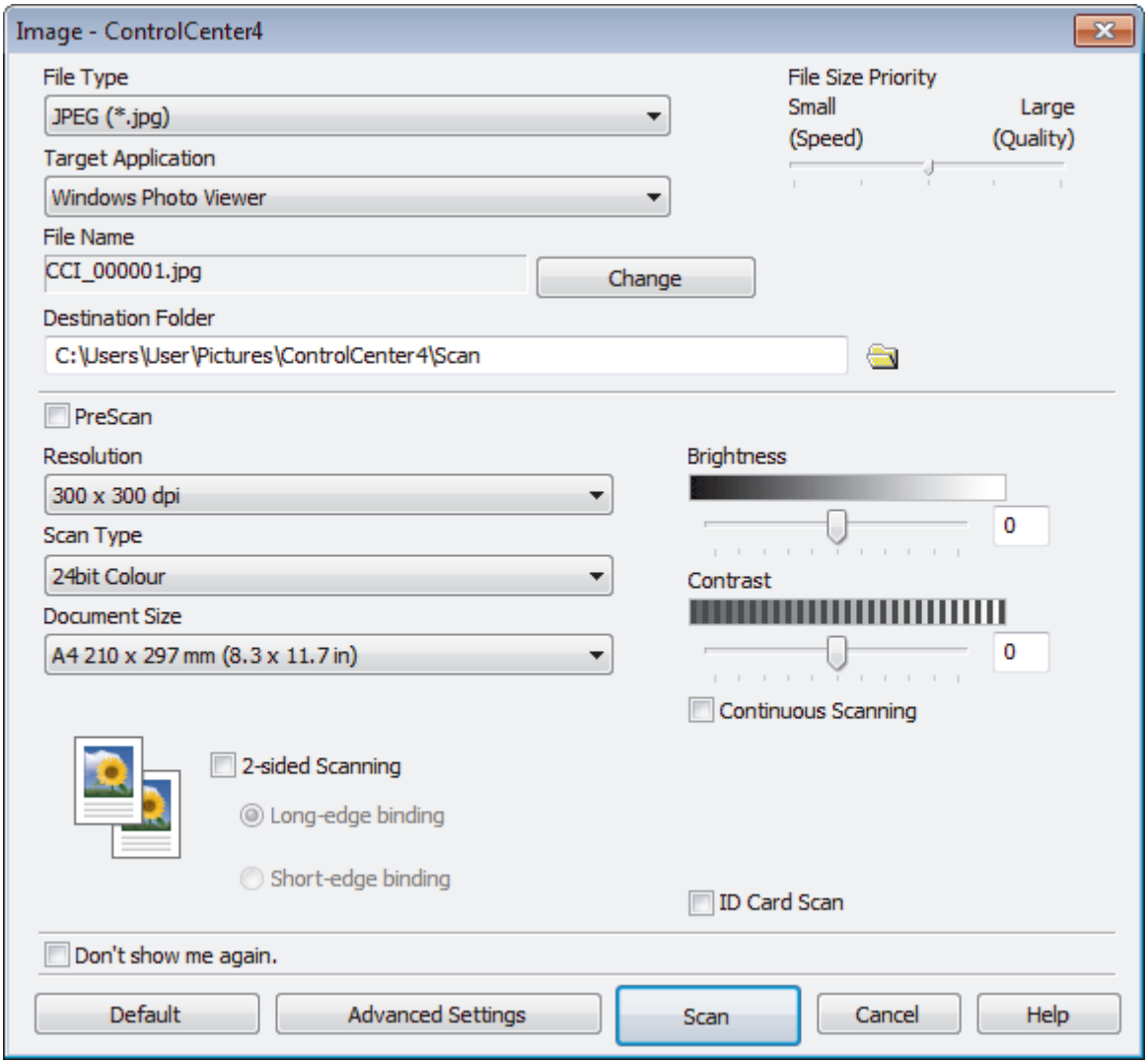

5. Change the scan settings, such as file format, file name, destination folder, resolution and colour, if needed.

- To change the file name, click **Change**.
- To change **Destination Folder**, click the folder icon.
- To preview and configure the scanned image, select the **PreScan** check box.

6. Click **Scan**.

   The machine starts scanning. The image opens in the application you have selected.

Related Information

- Scan Using ControlCenter4 Advanced Mode (Windows)

Save Scanned Data to a Folder as a PDF File Using ControlCenter4 Advanced Mode (Windows)

Scan documents and save them to a folder on your computer as PDF files.

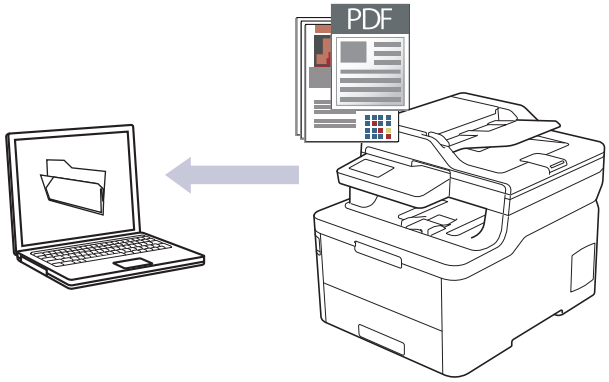

Select **Advanced Mode** as the mode setting for ControlCenter4.

1. Load your document.
2. Click the (**ControlCenter4**) icon in the task tray, and then click **Open**.
3. Click the **Scan** tab.

4. Click the **File** button.

   The scan settings dialog box appears.

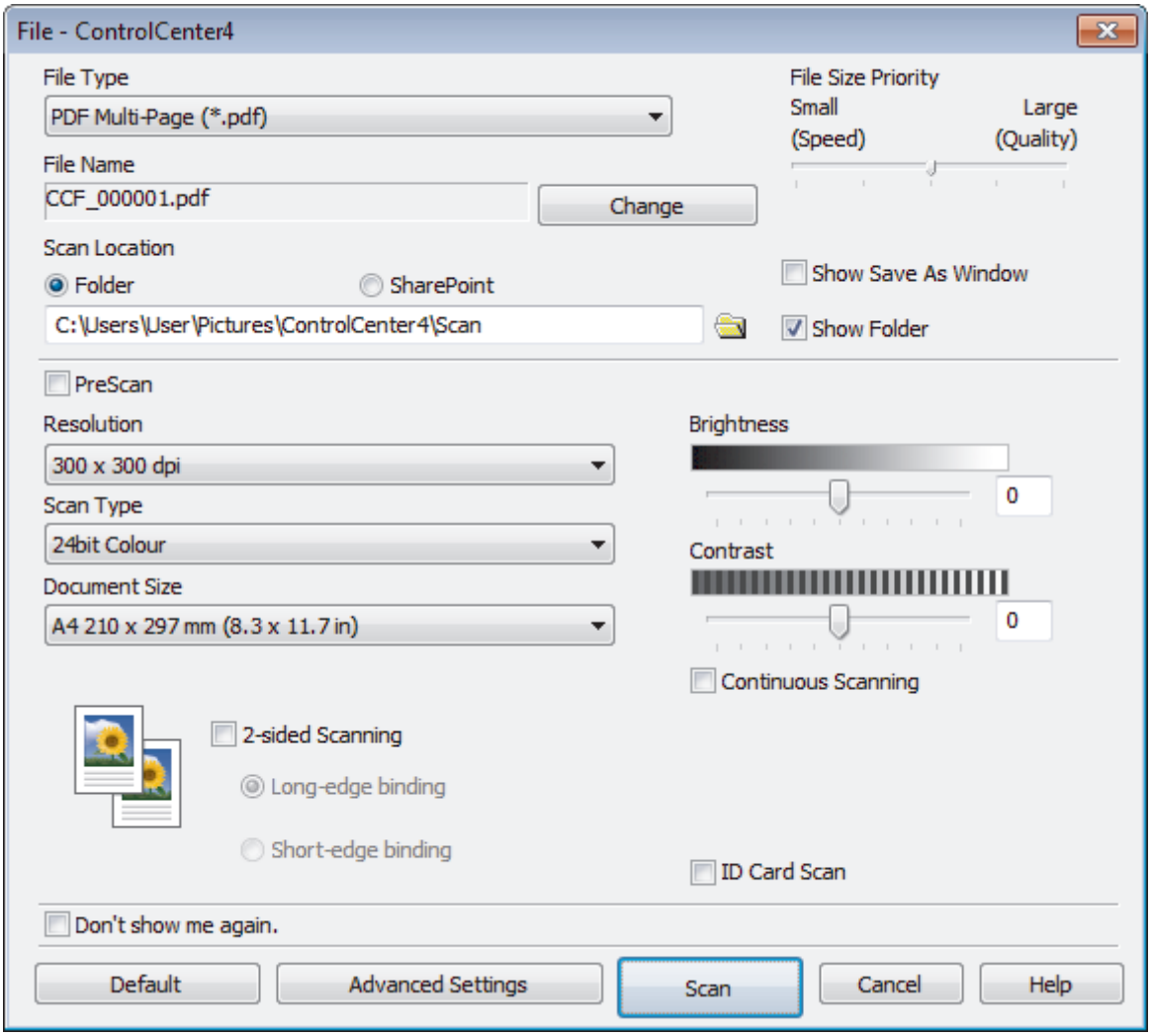

5. Click the **File Type** drop-down list, and then select a PDF file.

   To save the document as a password-protected PDF, select **Secure PDF Single-Page (*.pdf)** or **Secure PDF Multi-Page (*.pdf)** from the **File Type** drop-down list, click , and then type the password.

6. Click the folder icon to browse and select the folder where you want to save your scanned documents.
7. Change the scan settings, such as file format, file name, resolution and colour, if needed.

   To preview and configure the scanned image, select the **PreScan** check box.

8. Click **Scan**.

   The machine starts scanning. The file is saved in the folder you selected.

Related Information

- Scan Using ControlCenter4 Advanced Mode (Windows)

Scan Both Sides of a Document Automatically Using ControlCenter4 Advanced Mode (Windows)

Related Models: MFC-L3770CDW

Select **Advanced Mode** as the mode setting for ControlCenter4.

1. Load documents in the ADF.

To scan both sides of a document automatically, you must use the ADF, not the flatbed scanner glass.

2. Click the (**ControlCenter4**) icon in the task tray, and then click **Open**.
3. Click the **Scan** tab.

4. Click the button for the setting you want to change (**Image**, **OCR**, **E-mail**, or **File**).
   The scan settings dialog box appears.
5. Select the **2-sided Scanning** check box.
6. Select the **Long-edge binding** or **Short-edge binding** option, depending on the Original layout.
7. Change the scan settings, such as file format, file name, destination folder, resolution and colour, if needed.

- To change the file name, click **Change**.
- To change **Destination Folder**, click the folder icon.

8. Click **Scan**.
   The machine starts scanning.

You have now changed the default settings for your selected Scan to action. These settings will be used the next time one of the scan options (**Image**, **OCR**, **E-mail**, or **File**) is selected for this action.

Related Information

- Scan Using ControlCenter4 Advanced Mode (Windows)

Scan Both Sides of an ID Card Using ControlCenter4 Advanced Mode (Windows)

Select **Advanced Mode** as the mode setting for ControlCenter4.

1. Place an ID card on the scanner glass.
2. Click the (**ControlCenter4**) icon in the task tray, and then click **Open**.
3. Click the **Scan** tab.

4. Click the **File** button.

   The scan settings dialog box appears.

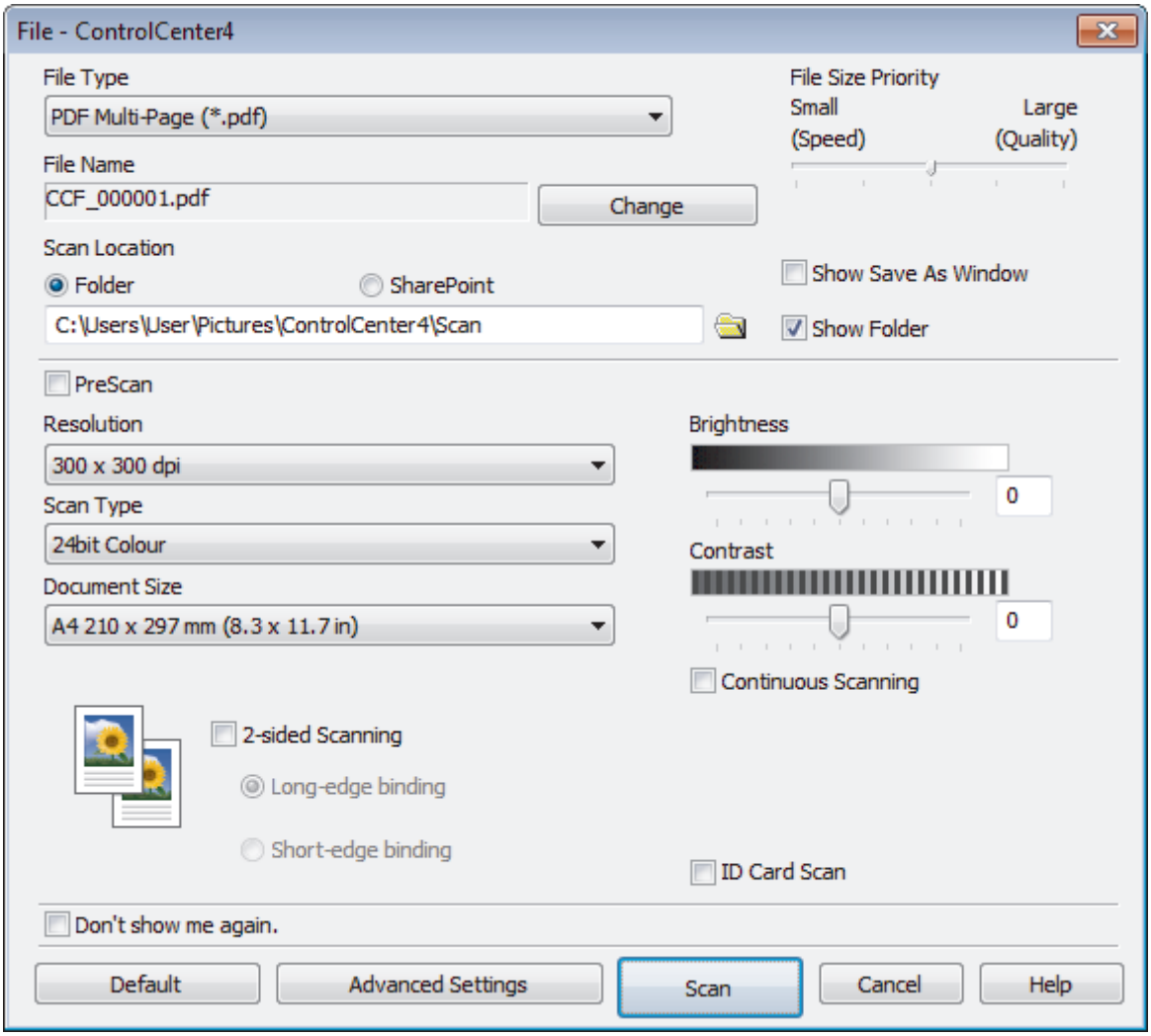

5. Select the **ID Card Scan** check box.

   The instruction dialog box appears.

6. Read the instructions on the screen, and then click **OK**.
7. Change the scan settings, such as file format, file name, scan location, resolution and colour, if needed.
8. Click **Scan**.

   The machine starts scanning one side of the identification card.

9. After the machine has scanned one side, turn over the identification card, and then click **Continue** to scan the other side.
10. Click **Finish**.

Related Information

- Scan Using ControlCenter4 Advanced Mode (Windows)

Scan to Email Attachment Using ControlCenter4 Advanced Mode (Windows)

Send a scanned document as an email attachment.

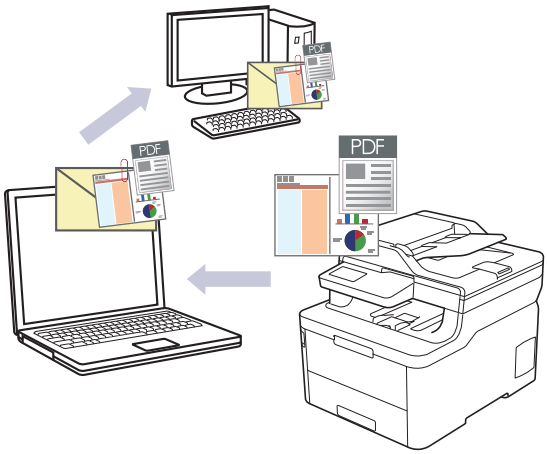

- Select **Advanced Mode** as the mode setting for ControlCenter4.
- The Scan to Email feature does not support Webmail services. Use the Scan to Image or Scan to File feature to scan a document or a picture, and then attach the scanned file to an email message.

The machine scans to your default email application.

1. Load your document.
2. Click the (**ControlCenter4**) icon in the task tray, and then click **Open**.
3. Click the **Scan** tab.

4. Click the **E-mail** button.

   The scan settings dialog box appears.

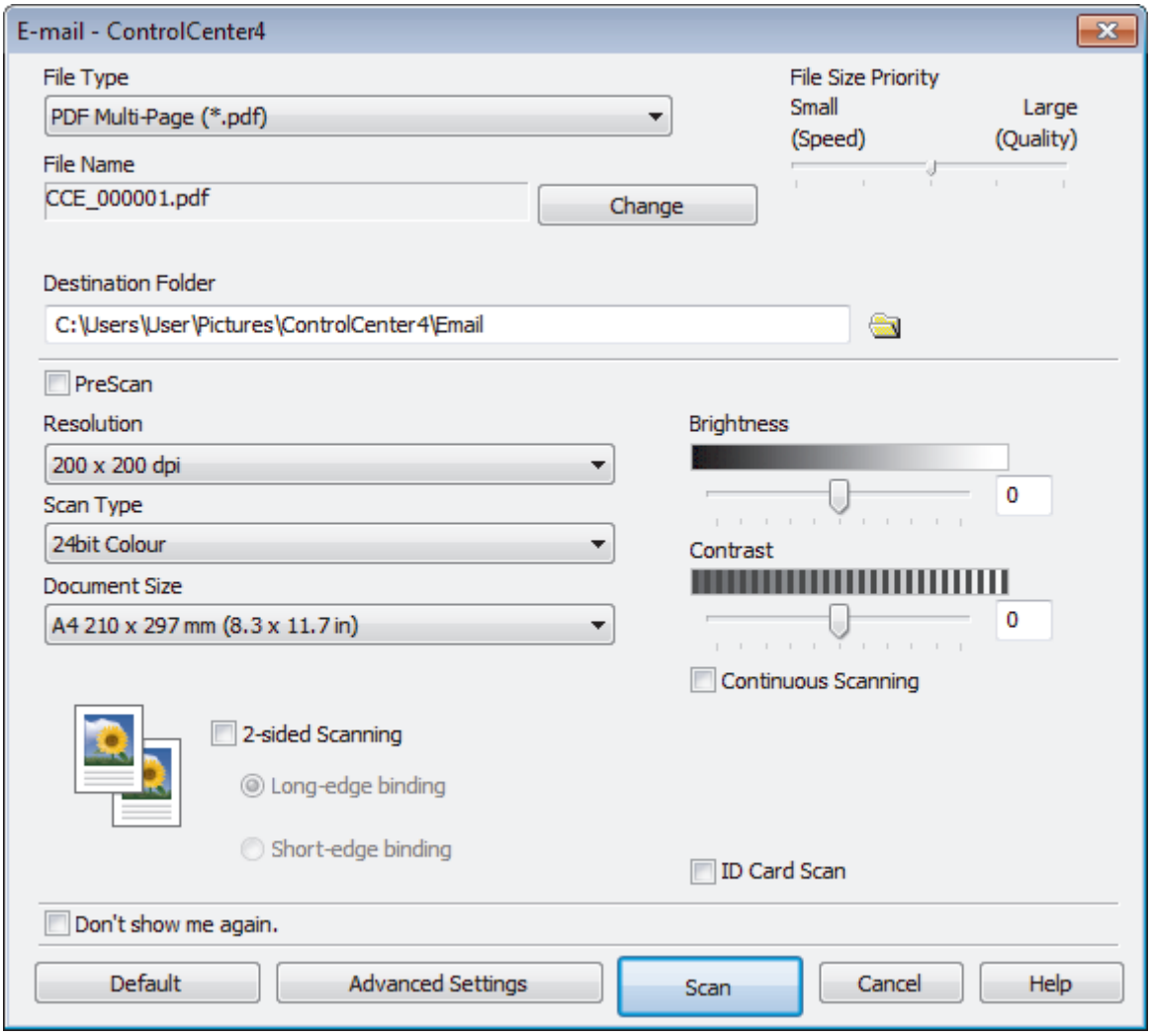

5. Change the scan settings, such as file format, file name, destination folder, resolution and colour, if needed.

- To change the file name, click **Change**.
- To change **Destination Folder**, click the folder icon.
- To preview and configure the scanned image, select the **PreScan** check box.

6. Click **Scan**.

   The machine starts scanning. Your default email application opens and the scanned image is attached to a new, blank email message.

Related Information

- Scan Using ControlCenter4 Advanced Mode (Windows)

Scan to an Editable Text File (OCR) Using ControlCenter4 Advanced Mode (Windows)

Your machine can convert characters in a scanned document to text using optical character recognition (OCR) technology. You can edit this text using your preferred text-editing application.

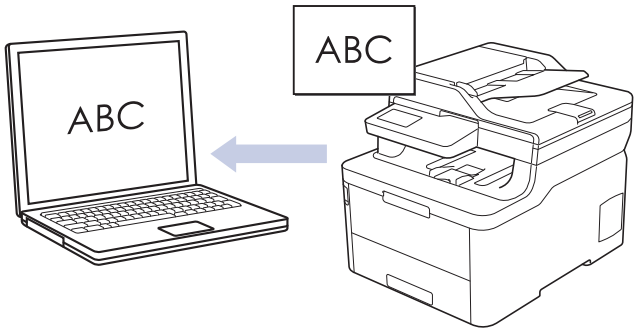

- Select **Advanced Mode** as the mode setting for ControlCenter4.

1. Load your document.
2. Click the (**ControlCenter4**) icon in the task tray, and then click **Open**.
3. Click the **Scan** tab.

4. Click the **OCR** button.

   The scan settings dialog box appears.

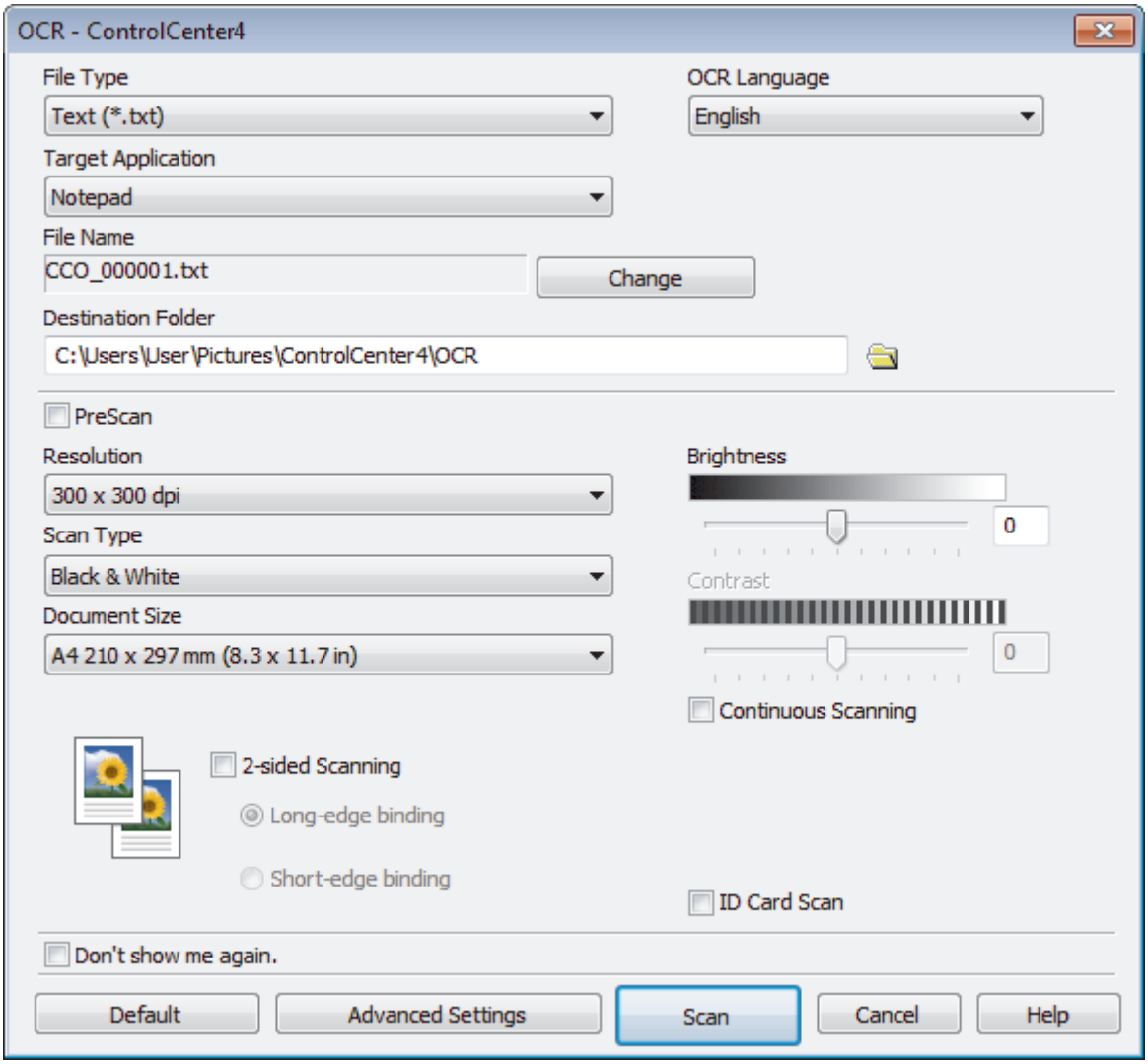

5. Change the scan settings, such as file format, file name, destination folder, resolution and colour, if needed.

- To change the file name, click **Change**.
- To change **Destination Folder**, click the folder icon.
- To preview and configure the scanned image, select the **PreScan** check box.

6. Click **Scan**.

   The machine scans the document, converts it to editable text, and then sends it to your default word processing application.

Related Information

- Scan Using ControlCenter4 Advanced Mode (Windows)

Scan Settings for ControlCenter4 Advanced Mode (Windows)

Settings	Applicable Features			
	Image	**OCR**	**E-mail**	**File**
File Type	Yes	Yes	Yes	Yes
Target Application	Yes	Yes	-	-
OCR Language	-	Yes	-	-
File Name	Yes	Yes	Yes	Yes
Scan Location or **Destination Folder**	Yes	Yes	Yes	Yes
Show Folder	-	-	-	Yes
Show Save As Window	-	-	-	Yes
File Size Priority	Yes	-	Yes	Yes
PreScan	Yes	Yes	Yes	Yes
Resolution	Yes	Yes	Yes	Yes
Scan Type	Yes	Yes	Yes	Yes
Document Size	Yes	Yes	Yes	Yes
Brightness	Yes	Yes	Yes	Yes
Contrast	Yes	Yes	Yes	Yes
Continuous Scanning	Yes	Yes	Yes	Yes
2-sided Scanning	Yes	Yes	Yes	Yes
ID Card Scan	Yes	Yes	Yes	Yes
Advanced Settings	Yes	Yes	Yes	Yes
Default	Yes	Yes	Yes	Yes

File Type

Select the file type you want to use for the scanned data.

For Image, Email and File

- **Windows Bitmap (*.bmp)**
- **JPEG (*.jpg)** (recommended for most users when scanning pictures)
- **TIFF Single-Page (*.tif)**
- **TIFF Multi-Page (*.tif)**
- **Portable Network Graphics (*.png)**
- **PDF Single-Page (*.pdf)** (recommended for scanning and sharing documents)
- **PDF Multi-Page (*.pdf)** (recommended for scanning and sharing documents)
- **PDF/A Single-Page (*.pdf)** (recommended for scanning and sharing documents)
- **PDF/A Multi-Page (*.pdf)** (recommended for scanning and sharing documents)
- **High Compression PDF Single-Page (*.pdf)**
- **High Compression PDF Multi-Page (*.pdf)**
- **Secure PDF Single-Page (*.pdf)**
- **Secure PDF Multi-Page (*.pdf)**
- **Searchable PDF Single-Page (*.pdf)**
- **Searchable PDF Multi-Page (*.pdf)**

- **XML Paper Specification (*.xps)** (the XML Paper Specification is available for Windows 7, Windows 8 and Windows 10, and when using applications that support XML Paper Specification files)

For Email and File

- **Microsoft Office Word (*.docx)** (Available only for certain models)
- **Microsoft Office PowerPoint (*.pptx)** (Available only for certain models)
- **Microsoft Office Excel (*.xlsx)**(Available only for certain models)

For OCR

- **HTML 3.2 (*.htm)**
- **HTML 4.0 (*.htm)**
- **Microsoft Excel 2003, XP (*.xls)**
- **RTF Word 2000 (*.rtf)**
- **WordPad (*.rtf)**
- **WordPerfect 9, 10 (*.wpd)**
- **Text (*.txt)**
- **Searchable PDF Single-Page (*.pdf)**
- **Searchable PDF Multi-Page (*.pdf)**

Target Application

Select the destination application from the drop-down list.

OCR Language

Set the OCR language to match the language of the scanned document's text.

File Name

Click **Change** to change the file name's prefix.

Scan Location

Select the **Folder** or **SharePoint** radio button to specify the destination where you want to save your scanned documents.

Destination Folder

Click the folder icon to browse and select the folder where you want to save your scanned documents.

Show Folder

Select this option to automatically display the destination folder after scanning.

Show Save As Window

Select this option to specify the scanned image's destination every time you scan.

File Size Priority

Adjust the data compression ratio of the scanned image. Change the file size by moving the **File Size Priority** slider to the right or left.

PreScan

Select **PreScan** to preview your image and crop unwanted portions before scanning.

Resolution

Select a scanning resolution from the **Resolution** drop-down list. Higher resolutions take more memory and transfer time, but produce a finer scanned image.

Scan Type

Select from a range of scan colour depths.

- **Auto**

  Use for any type of document. This mode automatically picks an appropriate colour depth for the document.

- **Black & White**

  Use for text or line art images.
- **Grey (Error Diffusion)**

  Use for photographic images or graphics. (Error Diffusion is a method for creating simulated grey images without using true grey dots. Black dots are put in a specific pattern to give a grey appearance.)
- **True Grey**

  Use for photographic images or graphics. This mode is more accurate because it uses up to 256 shades of grey.
- **24bit Colour**

  Use to create an image with the most accurate colour reproduction. This mode uses up to 16.8 million colours to scan the image, but it requires the most memory and has the longest transfer time.

Document Size

Select the exact size of your document from the **Document Size** drop-down list.

- If you select the **1 to 2 (A4)** option, the scanned image will be divided into two A5-size documents.

Brightness

Set the **Brightness** level by dragging the slider to the right or left to lighten or darken the image. If the scanned image is too light, set a lower brightness level and scan the document again. If the image is too dark, set a higher brightness level and scan the document again. You can also type a value into the field to set the **Brightness** level.

Contrast

Increase or decrease the **Contrast** level by moving the slider to the right or left. An increase emphasises dark and light areas of the image, while a decrease reveals more details in grey areas. You can also type a value into the field to set the **Contrast** level.

Continuous Scanning

Select this option to scan multiple pages. After a page is scanned, select either continue scanning or finish.

2-sided Scanning (MFC-L3770CDW)

Select this check box to scan both sides of the document. When using the Automatic 2-sided Scan feature, you must select the **Long-edge binding** or **Short-edge binding** option, depending on the layout of your original, to make sure the data file you create appears correctly.

ID Card Scan

Select this check box to scan both sides of an identification card onto one page.

Advanced Settings

Configure advanced settings by clicking the **Advanced Settings** button in the Scan Settings dialog box.

- **Remove Bleed-through / Pattern**
  - **Remove Background Colour**

    Remove the base colour of documents to make the scanned data more legible.
- **Rotate Image**

  Rotate the scanned image.
- **Skip Blank Page**

  Remove the document's blank pages from the scanning results.
- **Display Scanning Results**

  Show on your computer screen the number of total pages saved, and blank pages skipped.
- **Auto Deskew**

  Set the machine to automatically correct a skewed document.

Default

Select this option to restore all settings to their factory setting values.

Related Information

- Scan Using ControlCenter4 Advanced Mode (Windows)

Scan Using Nuance™ PaperPort™ 14SE or Other Windows Applications

You can use the Nuance™ PaperPort™ 14SE application for scanning.

- To download the Nuance™ PaperPort™ 14SE application, click (**Brother Utilities**), select **Do More** in the left navigation bar, and then click **PaperPort**.
- Nuance™ PaperPort™ 14SE supports Windows 7, Windows 8, Windows 8.1 and Windows 10.
- For detailed instructions on using each application, click the application's **Help** menu, and then click **Getting Started Guide** in the **Help** ribbon.

The instructions for scanning in these steps are for PaperPort™ 14SE. For other Windows applications, the steps will be similar. PaperPort™ 14SE supports both TWAIN and WIA drivers; the TWAIN driver (recommended) is used in these steps.

1. Load your document.
2. Start PaperPort™ 14SE.

   Do one of the following:

   - Windows 7

     Using your computer, click **(Start)** > **All Programs** > **Nuance PaperPort 14** > **PaperPort**.
   - Windows 8

     Click (**PaperPort**).
   - Windows 10

     Click > **Nuance PaperPort 14** > **PaperPort**.
3. Click the **Desktop** menu, and then click **Scan Settings** in the **Desktop** ribbon.

   The **Scan or Get Photo** panel appears on the left side of the screen.
4. Click **Select**.
5. From the available Scanners list, select **TWAIN: TW-Brother MFC-XXXX** or **TWAIN: TW-Brother MFC-XXXX LAN** (where XXX-XXXX is the model name of your machine). To use the WIA driver, select the Brother driver that has "WIA" as the prefix.
6. Select the **Display scanner dialog box** check box in the **Scan or Get Photo** panel.
7. Click **Scan**.

   The Scanner Setup dialog box appears.

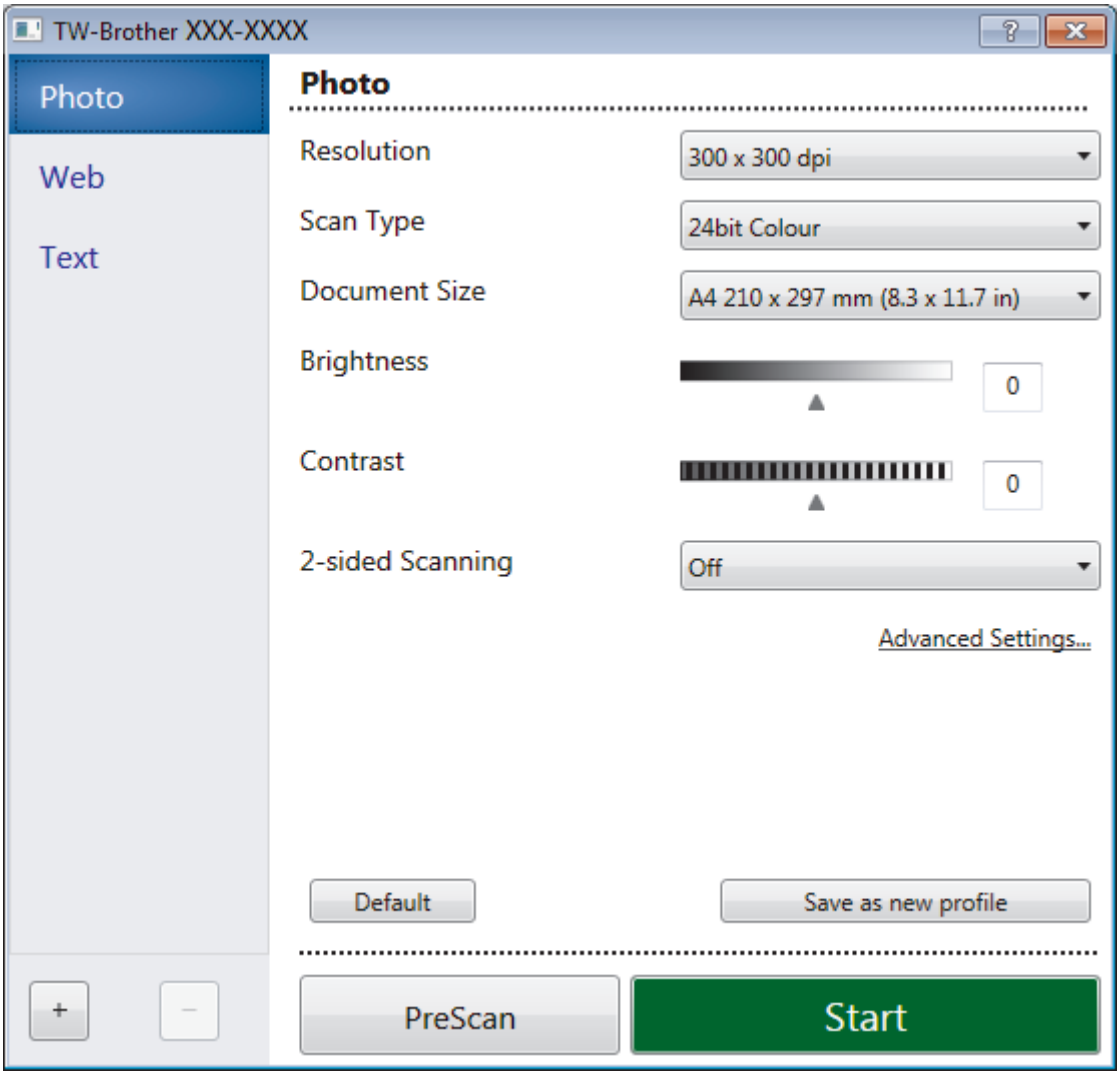

8. Adjust the settings in the Scanner Setup dialog box, if needed.
9. Click the **Document Size** drop-down list, and then select your document size.

To scan both sides of the document (MFC-L3770CDW):
Automatic 2-sided scan is available only when using the ADF.
You cannot use PreScan to preview an image.

10. Click **PreScan** if you want to preview your image and crop unwanted portions before scanning.
11. Click **Start**.
    The machine starts scanning.

Related Information

- Scan from Your Computer (Windows)
  - TWAIN Driver Settings (Windows)

TWAIN Driver Settings (Windows)

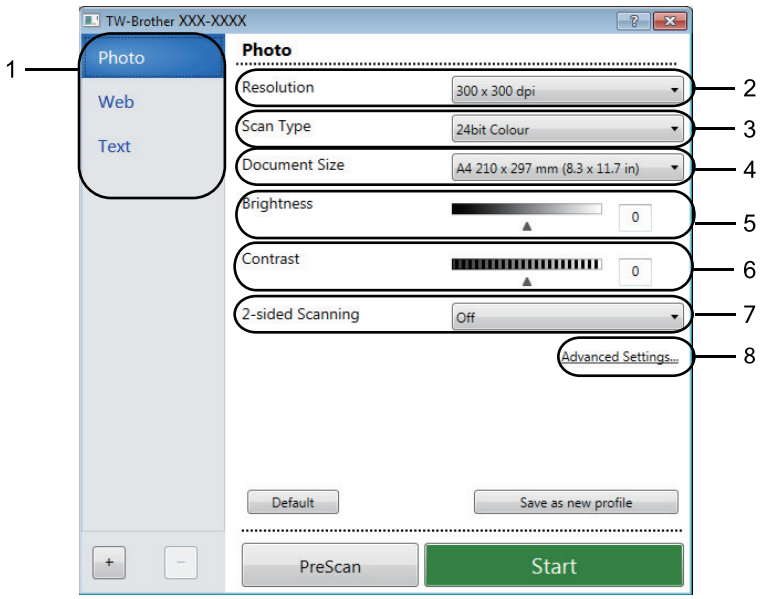

- Note that the item names and assignable values will vary depending on the machine.
- The **Contrast** option is available only when selecting the **Grey (Error Diffusion)**, **True Grey**, or **24bit Colour** options from the **Scan Type** settings.

1. **Scan**

   Select the **Photo**, **Web**, or **Text** option depending on the type of document you want to scan.

Scan (Image Type)		Resolution	Scan Type
Photo	Use for scanning photo images.	300 x 300 dpi	**24bit Colour**
Web	Use for attaching the scanned image to web pages.	100 x 100 dpi	**24bit Colour**
Text	Use for scanning text documents.	200 x 200 dpi	**Black & White**

2. **Resolution**

   Select a scanning resolution from the **Resolution** drop-down list. Higher resolutions take more memory and transfer time, but produce a finer scanned image.

3. **Scan Type**

   Select from a range of scan colour depths.

   - **Black & White**

     Use for text or line art images.

   - **Grey (Error Diffusion)**

     Use for photographic images or graphics. (Error Diffusion is a method for creating simulated grey images without using true grey dots. Black dots are put in a specific pattern to give a grey appearance.)

   - **True Grey**

     Use for photographic images or graphics. This mode is more accurate because it uses up to 256 shades of grey.

   - **24bit Colour**

     Use to create an image with the most accurate colour reproduction. This mode uses up to 16.8 million colours to scan the image, but it requires the most memory and has the longest transfer time.

4. **Document Size**

   Select the exact size of your document from a selection of preset scan sizes.

   If you select **Custom**, the **Custom Document Size** dialog box appears and you can specify the document size.

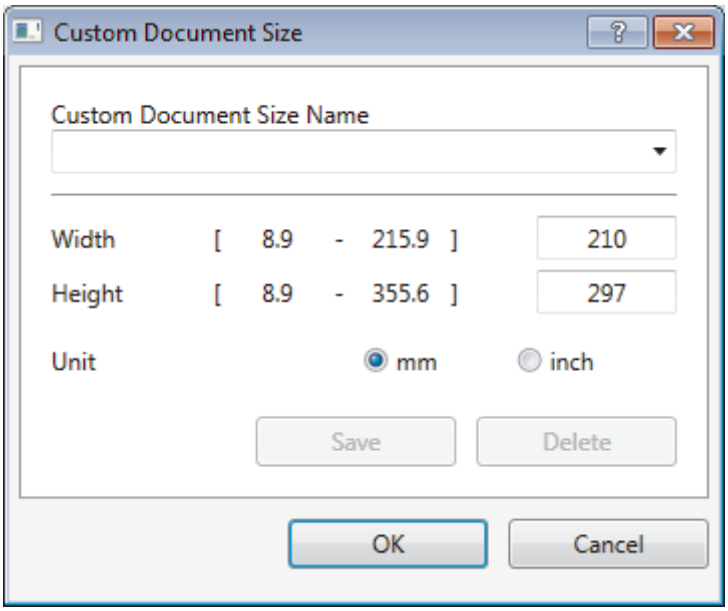

5. **Brightness**

   Set the **Brightness** level by dragging the slider to the right or left to lighten or darken the image. If the scanned image is too light, set a lower brightness level and scan the document again. If the image is too dark, set a higher brightness level and scan the document again. You can also type a value in the field to set the brightness level.

6. **Contrast**

   Increase or decrease the **Contrast** level by moving the slider to the right or left. An increase emphasises dark and light areas of the image, while a decrease reveals more details in grey areas. You can also type a value in the field to set the contrast level.

7. **2-sided Scanning**

   Scan both sides of the document. When using the Automatic 2-sided Scan feature, you must select the **Long-edge binding** or **Short-edge binding** option from the **2-sided Scanning** drop-down list, so when you turn the pages, they are facing the way you want.

   (MFC-L3770CDW)

8. **Advanced Settings...**

   Configure advanced settings by clicking the **Advanced Settings...** button in the Scan Settings dialog box.

   - **Document Correction**
     - **Auto Deskew**

       Set the machine to correct document skewing automatically as the pages are scanned.
     - **Rotate Image**

       Rotate the scanned image.
     - **Edge Fill**

       Fill in the edges on four sides of the scanned image using the selected colour and range.
     - **Skip Blank Page**

       Remove the document's blank pages from the scanning results.
   - **Enhancement**
     - **Background Processing**
       - **Remove Bleed-through / Pattern**

         Prevent bleed-through.
       - **Remove Background Colour**

Remove the base colour of documents to make the scanned data more legible.

- **Colour Drop**

  Select a colour to remove from the scanned image.

- **Edge Emphasis**

  Make the characters of the original sharper.

- **Reduce Noise**

  Improve and enhance the quality of your scanned images with this selection. The **Reduce Noise** option is available when selecting the **24bit Colour** option and the **300 x 300 dpi**, **400 x 400 dpi**, or **600 x 600 dpi** scan resolution.

- **B&W Image Quality**
  - **Character Correction**
    - **Blurred Character Correction**

      Correct the broken or incomplete characters of the original to make them easier to read.

    - **Boldface Formatting**

      Emphasise the characters of the original by making them bold.

- **Feed Control**
  - **Continuous Scan**

    Select this option to scan multiple pages. After a page is scanned, select either continue scanning or finish.

Related Information

- Scan Using Nuance™ PaperPort™ 14SE or Other Windows Applications

Scan Using Windows Fax and Scan

Windows Fax and Scan application is another option that you can use for scanning.

- Windows Fax and Scan uses the WIA scanner driver.
- If you want to crop a portion of a page after pre-scanning the document, you must scan using the scanner glass (also called the flatbed).

1. Load your document.
2. Launch Windows Fax and Scan.
3. Click **File** > **New** > **Scan**.
4. Select the scanner you want to use.
5. Click **OK**.

   The **New Scan** dialog box appears.

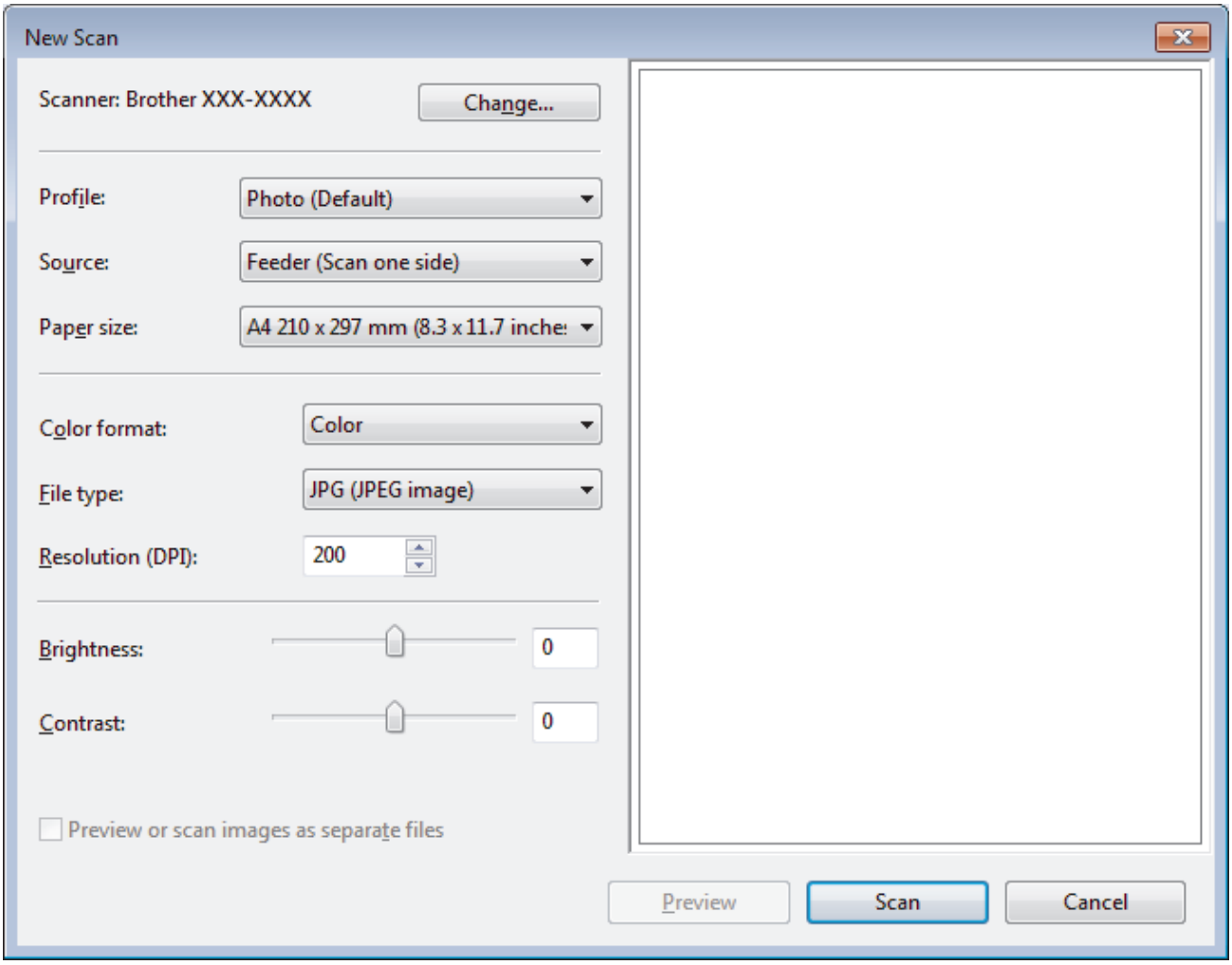

6. Adjust the settings in the Scanner Setup dialog box, if needed.

   The scanner resolution can be set to a maximum of 1200 dpi. If you want to scan at higher resolutions, use the **Scanner Utility** software from **Brother Utilities**.

   If your machine supports 2-sided Scan and you want to scan both sides of your document, select **Feeder (Scan both sides)** as **Source**.
7. Click **Scan**.

   The machine starts scanning the document.

Related Information

- Scan from Your Computer (Windows)
  - WIA Driver Settings (Windows)

WIA Driver Settings (Windows)

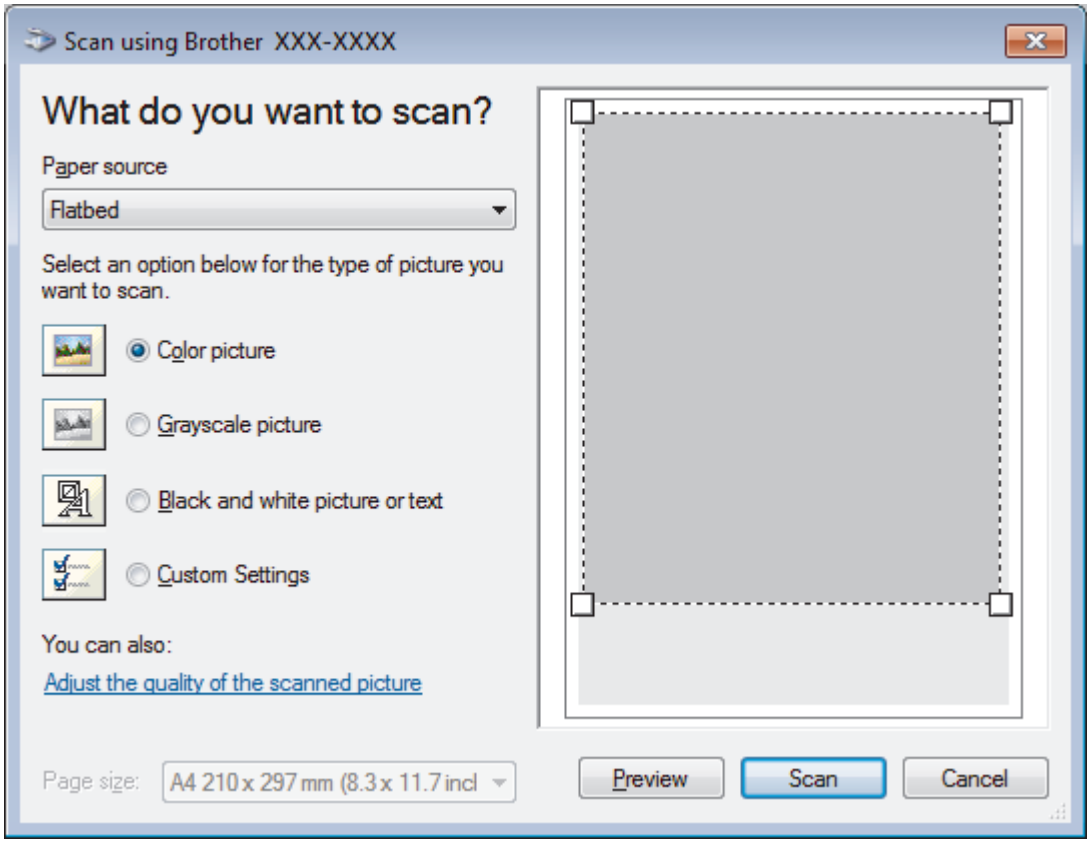

Paper source

Select the **Document Feeder** or **Flatbed** option from the drop-down list.

Picture Type (Image Type)

Select **Color picture**, **Grayscale picture**, **Black and white picture or text** , or **Custom Settings** for the type of document you want to scan.

To change advanced settings, click the **Adjust the quality of the scanned picture** link.

Page size

The **Page size** option is available if you select the **Document Feeder** as the **Paper source** option.

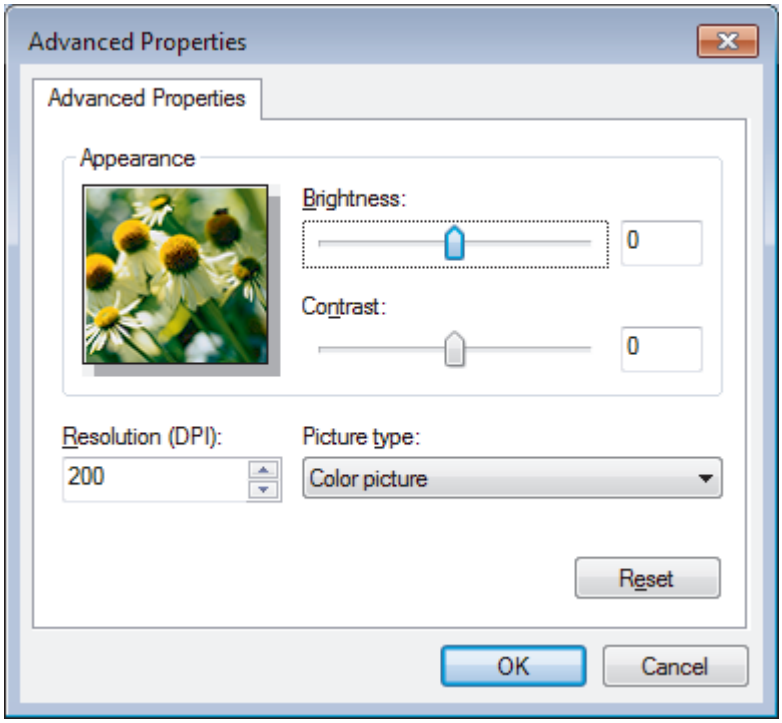

Brightness

Set the **Brightness** level by dragging the slider to the right or left to lighten or darken the image. If the scanned image is too light, set a lower brightness level and scan the document again. If the image is too dark, set a higher brightness level and scan the document again.

Contrast

Increase or decrease the **Contrast** level by moving the slider to the right or left. An increase emphasises dark and light areas of the image, while a decrease reveals more details in grey areas. You can also type a value in the field to set the contrast level.

Resolution (DPI)

Select a scanning resolution from the **Resolution (DPI)** list. Higher resolutions take more memory and transfer time, but produce a finer scanned image.

Related Information

- Scan Using Windows Fax and Scan

Scan from Your Computer (Mac)

There are several ways you can use your Mac to scan photos and documents on your Brother machine. Use the software applications provided by Brother or your favourite scanning application.

- Scan Using Brother iPrint&Scan (Mac)
- Scan Using TWAIN-Compliant Applications (Mac)
- TWAIN Driver Settings (Mac)
- Scan Using AirPrint (macOS)

Scan Using Brother iPrint&Scan (Mac)

1. In the **Finder** menu bar, click **Go** > **Applications**, and then double-click the iPrint&Scan icon.

   The Brother iPrint&Scan screen appears.
2. If your Brother machine is not selected, click the **Select your Machine** button, and then follow the on-screen instructions to select your Brother machine.
3. Click the **Scan** icon, and then follow the on-screen instructions to scan your documents.

Related Information

- Scan from Your Computer (Mac)

Related Topics:

- Brother iPrint&Scan for Windows and Mac
- Change Scan Button Settings from Brother iPrint&Scan (Mac)

Scan Using TWAIN-Compliant Applications (Mac)

You can also scan using TWAIN-compliant applications. For more information about the scanning procedure, see the manual for your application.

To use Brother TWAIN Driver, go to your model's **Downloads** page on the Brother Solutions Center at support.brother.com and download **Scanner Driver**.

1. Start your graphics application, and then select the scan operation.

   The scanner setup dialog box appears.

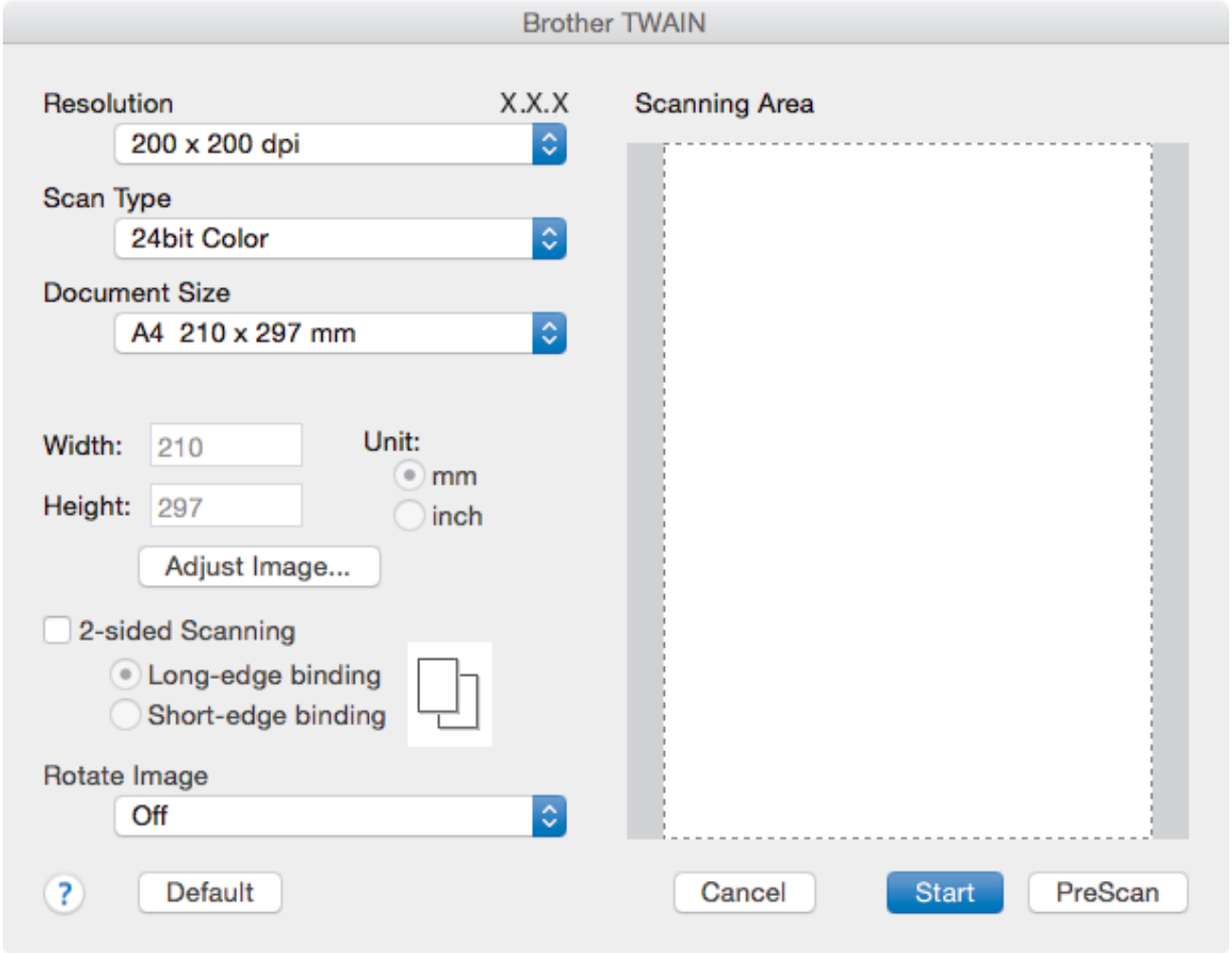

2. Change the scan settings, such as **Resolution**, **Scan Type**, or **Adjust Image**, if needed.
3. Click the **Document Size** pop-up menu, and then select your document size.
4. Click the **PreScan** option to preview your image and crop unwanted portions before scanning.

- After you select a document size, adjust the scanning area by holding down the mouse button and dragging your mouse pointer over the portion you want to scan.
- To scan both sides of the document (MFC-L3770CDW):

  Automatic 2-sided scan is available only when using the ADF.

  You cannot adjust the scanning area.

  You cannot use PreScan to preview an image.

5. Click **Start**.

   The machine starts scanning.

Related Information

- Scan from Your Computer (Mac)

TWAIN Driver Settings (Mac)

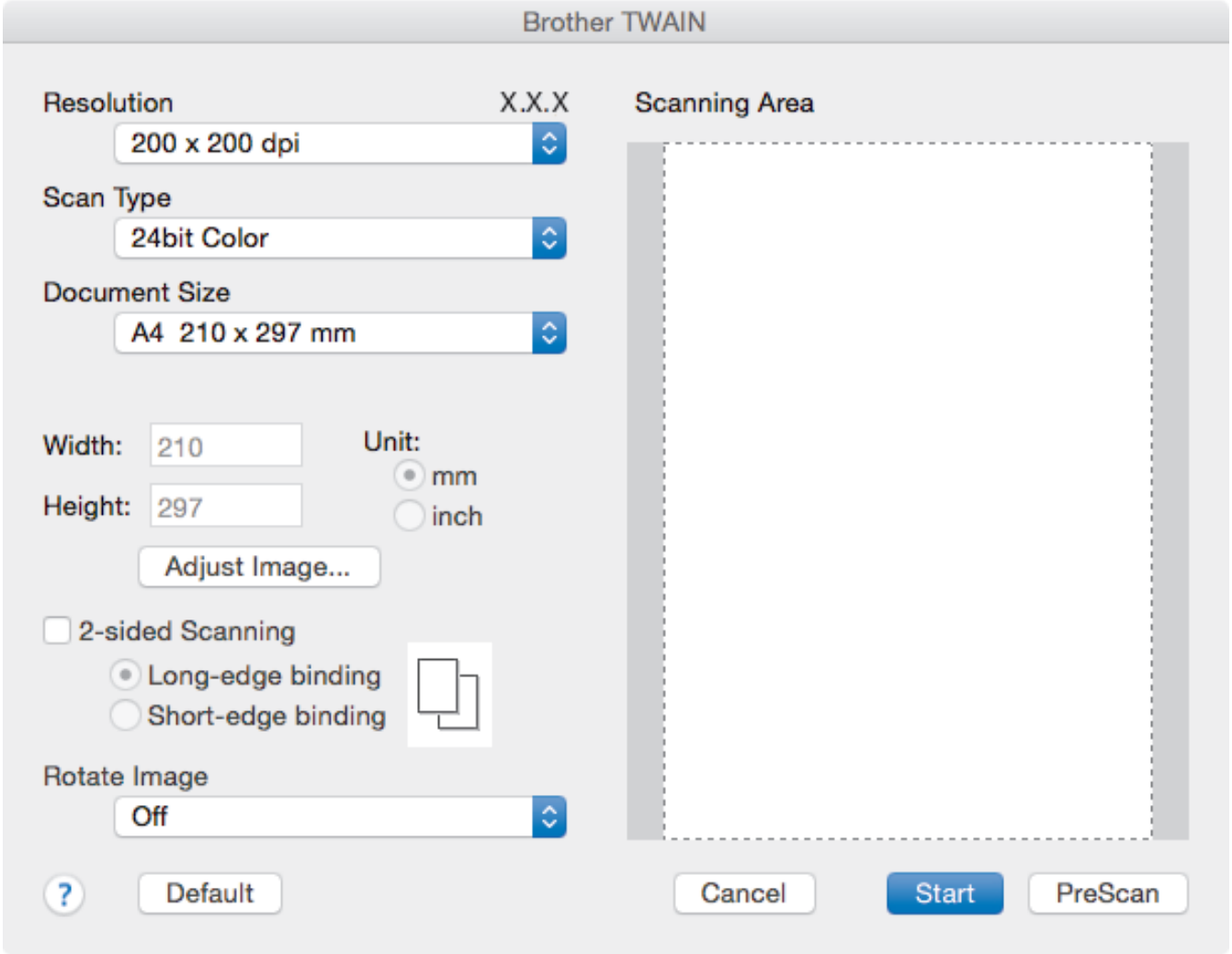

- Item names and assignable values will vary depending on the machine.
- The **Contrast** setting is available only when selecting **Gray (Error Diffusion)**, **True Gray**, or **24bit Color** from the **Scan Type** options.

1. **Resolution**

   Select a scanning resolution from the **Resolution** pop-up menu. Higher resolutions take more memory and transfer time, but produce a finer scanned image.

2. **Scan Type**

   Select from a range of scan colour depths.

   - **Black & White**

     Use for text or line art images.

   - **Gray (Error Diffusion)**

     Use for photographic images or graphics. (Error Diffusion is a method for creating simulated grey images without using true grey dots. Black dots are put in a specific pattern to give a grey appearance.)

   - **True Gray**

     Use for photographic images or graphics. This mode is more accurate because it uses up to 256 shades of grey.

- **24bit Color**

  Use to create an image with the most accurate colour reproduction. This mode uses up to 16.8 million colours to scan the image, but it requires the most memory and has the longest transfer time.

3. **Document Size**

   Select the exact size of your document from a selection of preset scan sizes.

   - If you select **Custom**, you can specify the document size.

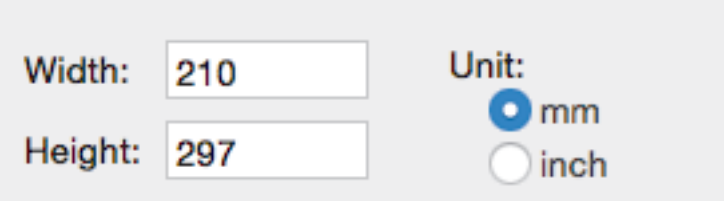

4. **Adjust Image**

   Click the **Adjust Image** button to adjust other image qualities.

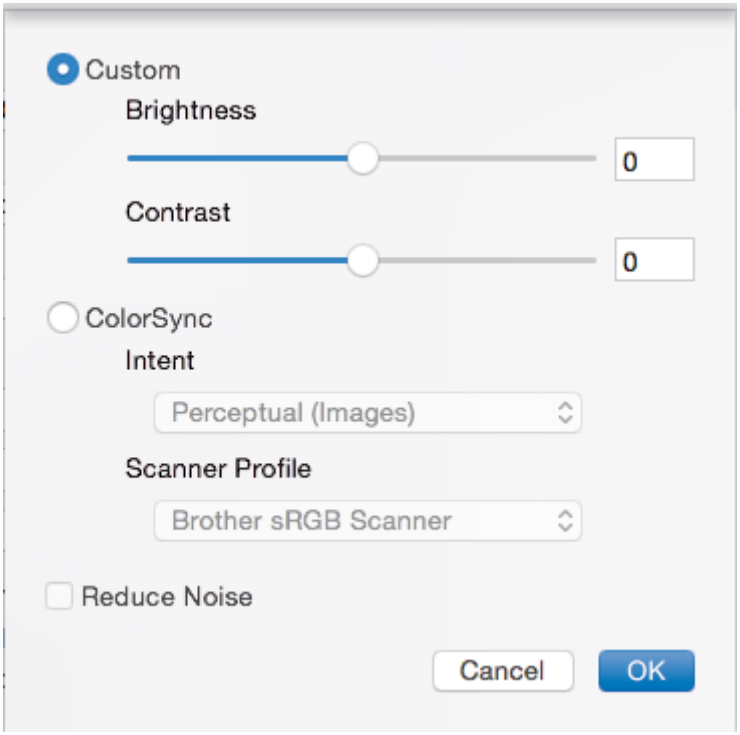

Brightness

Set the **Brightness** level by dragging the slider to the right or left to lighten or darken the image. If the scanned image is too light, set a lower brightness level and scan the document again. If the image is too dark, set a higher brightness level and scan the document again. You can also type a value in the box to set the brightness.

Contrast

Increase or decrease the **Contrast** level by moving the slider to the right or left. An increase emphasises dark and light areas of the image, while a decrease reveals more details in grey areas. You can also type a value in the box to set the contrast.

Reduce Noise

Improve and enhance the quality of your scanned images with this selection. The **Reduce Noise** option is available when selecting the **24bit Color** option and the **300 x 300 dpi**, **400 x 400 dpi**, or **600 x 600 dpi** scan resolutions.

5. **2-sided Scanning**

   If you select this check box, the machine scans both sides of the document. When using the Automatic 2-sided Scan feature, you must select the **Long-edge binding** or **Short-edge binding** option, depending on the layout of your original, to make sure the created data file appears correctly.

   (Available only for certain models)

6. **Rotate Image**

   Rotate the scanned image.

Related Information

- Scan from Your Computer (Mac)

Configure Scan Settings Using Web Based Management

- Set the Scan File Name Using Web Based Management
- Set the Scan Job Email Report Using Web Based Management

Set the Scan File Name Using Web Based Management

Set up a file name for scanned data using Web Based Management.

1. Start your web browser.

   Type "https://machine's IP address" in your browser's address bar (where "machine's IP address" is the IP address of the machine or the print server name). For example: https://192.168.1.2

   If the machine prompts you for a password, type it, and then click .

2. Click the **Scan** tab.
3. Click the **Scan File Name** menu in the left navigation bar.
4. Select the **File Name Style** from the drop-down list.
5. If you selected the option to include the date in **File Name Style** field, select the **Date** format from the drop-down list.
6. In the **Time** fields, select **On** to include the time information in the file name.
7. In the **Counter** field, select **Continuous** or **Reset after each job**.

When you select **Reset after each job**, duplication of file names may occur.

8. If you want to create a user-defined file name prefix, type a file name in the user-defined fields of each scan function.

Using the following characters: ?, /, \, or * may cause a sending error.

9. Click **Submit**.

Related Information

- Configure Scan Settings Using Web Based Management

Set the Scan Job Email Report Using Web Based Management

When you scan a document, the machine will send a scan job email report automatically to the registered email address.

1. Start your web browser.

   Type "https://machine's IP address" in your browser's address bar (where "machine's IP address" is the IP address of the machine or the print server name). For example: https://192.168.1.2

   If the machine prompts you for a password, type it, and then click .

2. Click the **Scan** tab.
3. Click the **Scan Job e-mail report** menu in the left navigation bar.
4. In the **Administrator Address** field, type the email address.
5. For the scan functions you want, select **On** to send a scan job email report.
6. Click **Submit**.

Related Information

- Configure Scan Settings Using Web Based Management

Copy

- Copy a Document
- Enlarge or Reduce Copied Images
- Make N in 1 Copies Using the Page Layout Feature
- Sort Copies
- Copy an ID Card
- Copy on Both Sides of the Paper (2-sided Copy)
- Copy Options

Copy a Document

>> DCP-L3510CDW/DCP-L3551CDW
>> MFC-L3710CW/MFC-L3735CDN/MFC-L3745CDW/MFC-L3750CDW/MFC-L3770CDW

DCP-L3510CDW/DCP-L3551CDW

1. Make sure you have loaded the correct size paper in the paper tray.
2. Do one of the following:
   - Place the document *face up* in the ADF. (available only for certain models)
     (If you are copying multiple pages, we recommend using the ADF.)

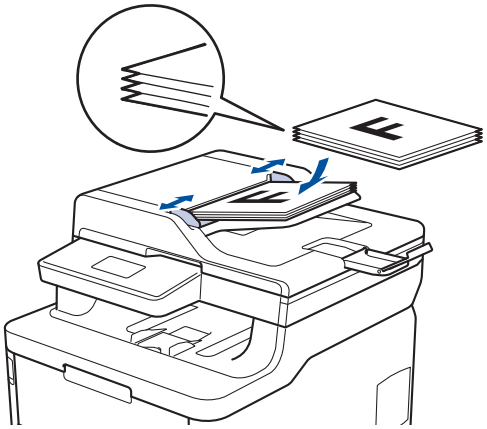

   - Place the document *face down* on the scanner glass.

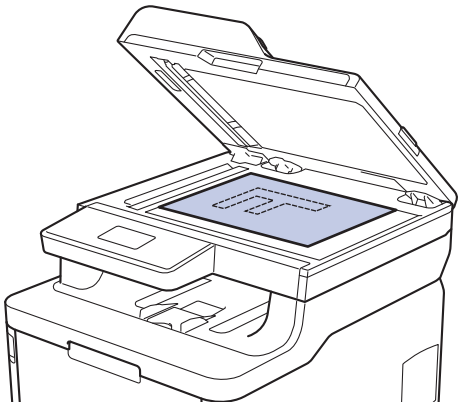

3. Press ▲ or ▼ to enter the number of copies you want.
   The LCD displays:

```
Stack  Copies:01
100%□□■□□   Auto
```

4. Press **Mono Start** or **Colour Start**.

MFC-L3710CW/MFC-L3735CDN/MFC-L3745CDW/MFC-L3750CDW/MFC-L3770CDW

1. Make sure you have loaded the correct size paper in the paper tray.

2. Do one of the following:
   - Place the document *face up* in the ADF.

     (If you are copying multiple pages, we recommend using the ADF.)

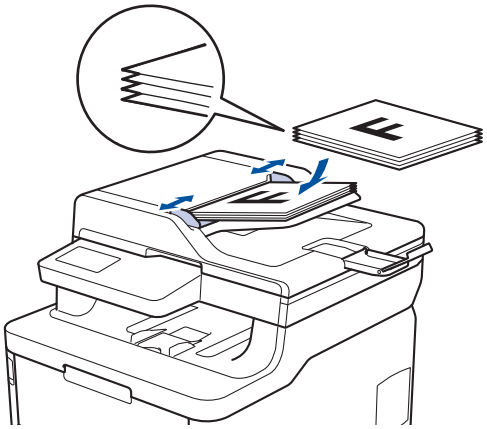

   - Place the document *face down* on the scanner glass.

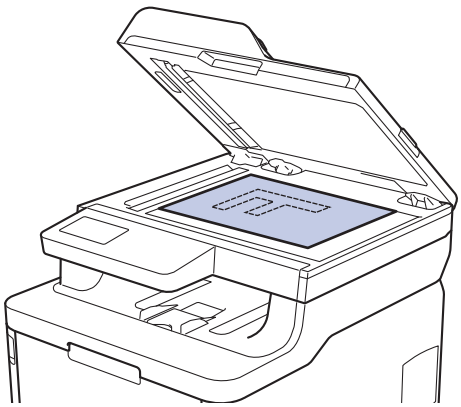

3. Press [Copy].

   The LCD displays:

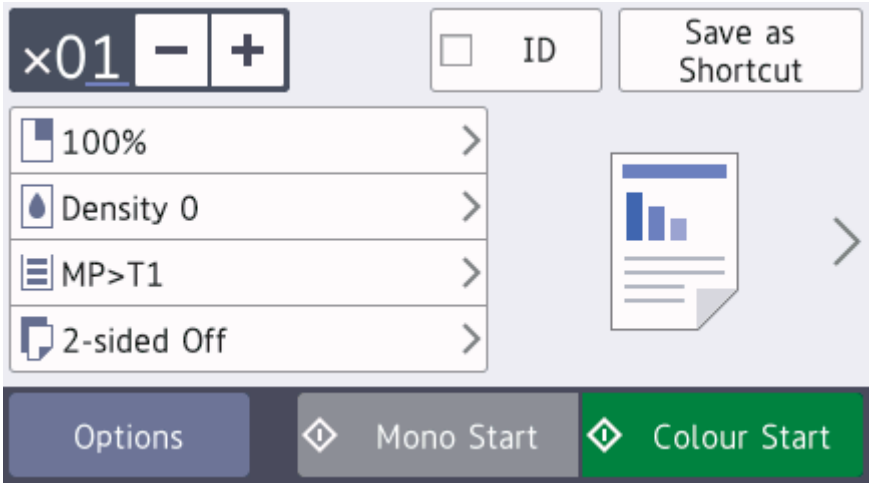

4. Change the copy settings, if needed.
   - ×01 (Number of copies)

     Enter the number of copies in one of the following ways:

     - Press + or − on the LCD.
     - Press the numbers on the control panel.
   - [Options]

     Press Options to change the copy settings for the next copy only.

- When finished, press [OK]. (If the [OK] button is displayed.)
- After you have finished choosing new options, you can save them by pressing the [Save as Shortcut] button.

- Quick Copy

  Press > to access the preset copy settings.

- Current setting

  Press the following icons or display area to change these settings for the next copy only. The icon displayed varies depending on the model.

  - [Enlarge/Reduce]
  - [Density]
  - [Tray Use]
  - [2-sided Copy]
  - [Quality]
  - [Contrast]

5. Press [Colour Start] or [Mono Start].

To stop copying, press .

Related Information

- Copy

Enlarge or Reduce Copied Images

Select an enlargement or reduction ratio to resize your copied data.

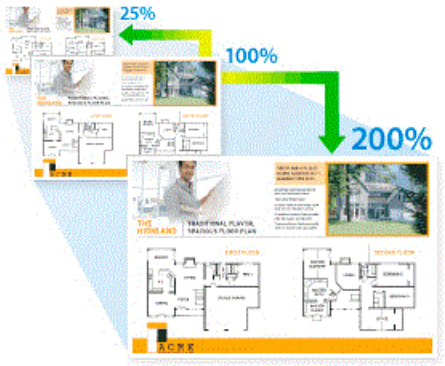

>> DCP-L3510CDW/DCP-L3551CDW
>> MFC-L3710CW/MFC-L3735CDN/MFC-L3745CDW/MFC-L3750CDW/MFC-L3770CDW

DCP-L3510CDW/DCP-L3551CDW

1. Load your document.
2. Press ▲ or ▼ to enter the number of copies you want.
3. Press **Copy/Scan Options**.
4. Press ▲ or ▼ to select [Enlarge/Reduce], and then press **OK**.
5. Press ▲ or ▼ to select the enlargement or reduction ratio you want, and then press **OK**.
   - If you select [Custom(25-400%)], press ▲ or ▼ to enter an enlargement or reduction ratio from [25%] to [400%] and then press **OK**.
6. Press **Mono Start** or **Colour Start**.

MFC-L3710CW/MFC-L3735CDN/MFC-L3745CDW/MFC-L3750CDW/MFC-L3770CDW

1. Load your document.
2. Press [Copy].
3. Enter the number of copies.
4. Press [Options] > [Enlarge/Reduce].
5. Swipe up or down or press ▲ or ▼ to display the available options, and then press the option you want.
6. Do one of the following:
   - If you select [Enlarge] or [Reduce], press the enlargement or reduction ratio you want to use.
   - If you select [Custom(25-400%)], press (backspace) to erase the displayed percentage, or press ◀ to move the cursor, and then enter an enlargement or reduction ratio from [25] to [400].

     Press [OK].
   - If you selected [100%], go to the next step.
7. When finished, press [OK]. (If the [OK] button is displayed.)
8. Press [Colour Start] or [Mono Start].

Related Information

- Copy

Make N in 1 Copies Using the Page Layout Feature

The N in 1 copy feature saves paper by copying two or four pages of your document onto one page of the copy.

>> DCP-L3510CDW/DCP-L3551CDW
>> MFC-L3710CW/MFC-L3735CDN/MFC-L3745CDW/MFC-L3750CDW/MFC-L3770CDW

DCP-L3510CDW/DCP-L3551CDW

1. Load your document.
2. Press ▲ or ▼ to enter the number of copies you want.
3. Press **Copy/Scan Options**.
4. Press ▲ or ▼ to select `[Page Layout]`, and then press **OK**.
5. Press ▲ or ▼ to select `[Off(1 in 1)]`, `[2 in 1 (P)]`, `[2 in 1 (L)]`, `[4 in 1 (P)]` or `[4 in 1 (L)]`, and then press **OK**.
6. Press **Mono Start** or **Colour Start**.

   If you placed the document in the ADF, the machine scans the pages and starts printing.

   If you are using the scanner glass, go to the next step.
7. After the machine scans the page, place the next page on the scanner glass, and then press ▲ to select the `[Yes]` option.
8. After scanning all the pages, press ▼ to select the `[No]` option.

MFC-L3710CW/MFC-L3735CDN/MFC-L3745CDW/MFC-L3750CDW/MFC-L3770CDW

1. Load your document.
2. Press `[Copy]`.
3. Enter the number of copies.
4. Press `[Options]` > `[Page Layout]`.
5. Swipe up or down or press ▲ or ▼ to display the options, and then press the option you want.

Option	Description
`2in1(Portrait)`	
`2in1(Landscape)`	

Option	Description
4in1(Portrait)	
4in1(Landscape)	

6. When finished, press [OK]. (If the [OK] button is displayed.)
7. Press [Colour Start] or [Mono Start].

   If you placed the document in the ADF, the machine scans the pages and starts printing.
8. **If you are using the scanner glass, repeat the following steps for each page of the document:**
   - Place the next page on the scanner glass, and then press [Continue] to scan the page.
   - After scanning all the pages, press [Finish].

Related Information

- Copy

Sort Copies

Sort multiple copies. Pages will be stacked in the order they are fed, that is: 1, 2, 3, and so on.

>> DCP-L3510CDW/DCP-L3551CDW
>> MFC-L3710CW/MFC-L3735CDN/MFC-L3745CDW/MFC-L3750CDW/MFC-L3770CDW

DCP-L3510CDW/DCP-L3551CDW

1. Load your document.
2. Press ▲ or ▼ to enter the number of copies you want.
3. Press **Copy/Scan Options**.
4. Press ▲ or ▼ to select `[Stack/Sort]`, and then press **OK**.
5. Press ▲ or ▼ to select `[Sort]`, and then press **OK**.
6. Press **Mono Start** or **Colour Start**.

   If you placed the document in the ADF, the machine scans the pages and starts printing.

   If you are using the scanner glass, go to the next step.
7. After the machine scans the page, place the next page on the scanner glass, and then press ▲ to select the `[Yes]` option.
8. After scanning all the pages, press ▼ to select the `[No]` option.

MFC-L3710CW/MFC-L3735CDN/MFC-L3745CDW/MFC-L3750CDW/MFC-L3770CDW

1. Load your document.
2. Press `[Copy]`.
3. Enter the number of copies.
4. Press `[Options]` > `[Stack/Sort]` > `[Sort]`.
5. When finished, press `[OK]`. (If the `[OK]` button is displayed.)
6. Press `[Colour Start]` or `[Mono Start]`.

   If you placed the document in the ADF, the machine scans the pages and starts printing.
7. **If you are using the scanner glass, repeat the following steps for each page of the document:**
   - Place the next page on the scanner glass, and then press `[Continue]` to scan the page.
   - After scanning all the pages, press `[Finish]`.

Related Information

- Copy

Copy an ID Card

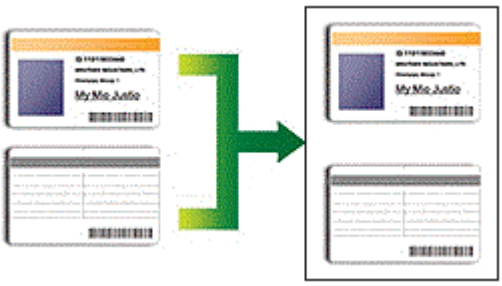

You may copy an identification card only to the extent permitted under applicable laws. For more detailed information, see the *Product Safety Guide*.

>> DCP-L3510CDW/DCP-L3551CDW
>> MFC-L3710CW/MFC-L3735CDN/MFC-L3745CDW/MFC-L3750CDW/MFC-L3770CDW

DCP-L3510CDW/DCP-L3551CDW

1. Place an identification card *face down* near the upper left corner of the scanner glass.

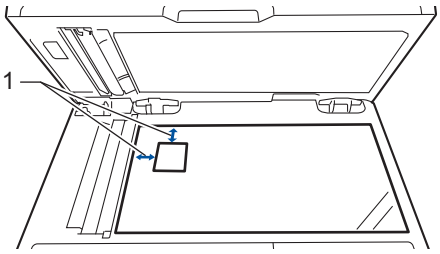

1 4.0 mm or greater (top, left)

2. Press **2 in 1 (ID) Copy**.
3. Press ▲ or ▼ to enter the number of copies you want.
4. Press **Mono Start** or **Colour Start**.

   The machine scans one side of the identification card.
5. After the machine has scanned the first side, turn over the identification card.

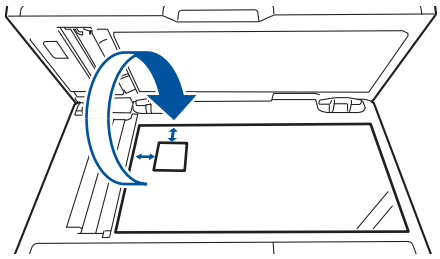

6. Press **Mono Start** or **Colour Start** to scan the other side.

MFC-L3710CW/MFC-L3735CDN/MFC-L3745CDW/MFC-L3750CDW/MFC-L3770CDW

1. Place your identification card *face down* near the upper left corner of the scanner glass.

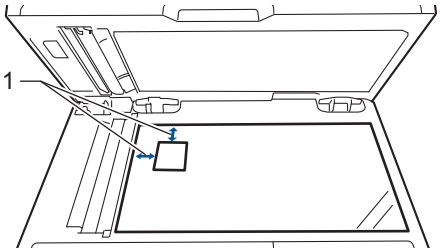

1: Distance 4.0 mm or greater (top, left)

2. Press [Copy].
3. Press > on the touchscreen, and then select [2in1(ID)].
4. Enter the number of copies.
5. Press [Colour Start] or [Mono Start].

   The machine scans one side of the identification card.
6. After the machine has scanned the first side, turn over the identification card.

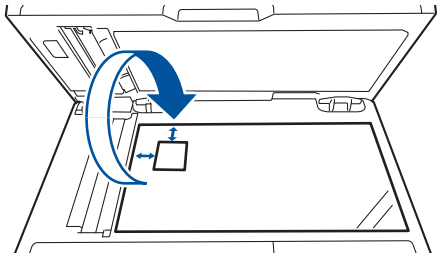

7. Press [Continue] to scan the other side.

Related Information

- Copy

Copy on Both Sides of the Paper (2-sided Copy)

Related Models: DCP-L3510CDW/DCP-L3551CDW/MFC-L3735CDN/MFC-L3745CDW/MFC-L3750CDW/MFC-L3770CDW

Reduce the amount of paper you use by copying onto both sides of the paper.

- You must choose a 2-sided copy layout from the following options before you can start 2-sided copying.
- The layout of your original document determines which 2-sided copy layout you should choose.
- To use the automatic 2-sided copy feature, you must load your document in the ADF.
- When you manually make 2 sided copies from a 2-sided document, use the scanner glass.
- Select A4 sized paper when using the 2-sided copy option.

Portrait

2–sided to 2–sided

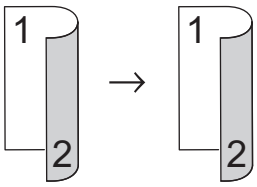

1–sided to 2–sided (Long Edge Flip)

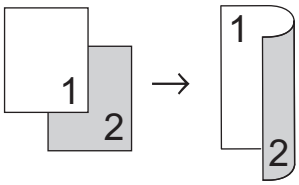

1–sided to 2–sided (Short Edge Flip)

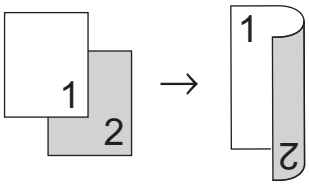

Landscape

2–sided to 2–sided

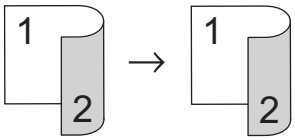

1–sided to 2–sided (Long Edge Flip)

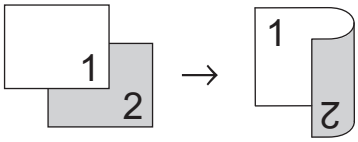

1–sided to 2–sided (Short Edge Flip)

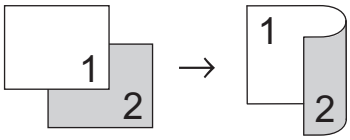

>> DCP-L3510CDW/DCP-L3551CDW
>> MFC-L3735CDN/MFC-L3745CDW/MFC-L3750CDW/MFC-L3770CDW

DCP-L3510CDW/DCP-L3551CDW

1. Load your document.
2. Press ▲ or ▼ to enter the number of copies you want.
3. Press **Copy/Scan Options**.
4. Press ▲ or ▼ to select [2-sided], and then press **OK**.
5. Press ▲ or ▼ to display [Layout Long] or [Layout Short], and then press **OK**.
6. Select flip on long edge or flip on short edge, and then press **OK**.
7. Press ▲ or ▼ to display [2sided → 2sided] or [1sided → 2sided], and then press **OK**.

If you select [2sided → 2sided], you cannot use the ADF. Use the scanner glass.

8. Press **Mono Start** or **Colour Start**.

   If you placed the document in the ADF, the machine scans the pages and starts printing.

   If you are using the scanner glass, go to the next step.
9. After the machine scans the page, place the next page on the scanner glass, and then press ▲ to select the [Yes] option.
10. After scanning all the pages, press ▼ to select the [No] option.

MFC-L3735CDN/MFC-L3745CDW/MFC-L3750CDW/MFC-L3770CDW

1. Load your document.

NOTE

- For 2-sided scan models: Load your 2-sided document in the ADF. If you use the scanner glass for your 2-sided document, select the [1-sided⇒2-sided] option.
- For 1-sided scan models: Load your 2-sided document to the scanner glass.

2. Press [Copy].
3. Enter the number of copies.
4. Press [Options] > [2-sided Copy].
5. Do one of the following:
   - To make 2-sided copies of a 2-sided document, press [2-sided⇒2-sided].
   - To make 2-sided copies from a 1-sided document, follow these steps:
     a. To change the layout options, press [Layout], and then press [Long Edge Flip] or [Short Edge Flip].
     b. Press [1-sided⇒2-sided].

For MFC-L3735CDN/MFC-L3745CDW/MFC-L3750CDW

If you select [2-sided⇒2-sided], you cannot use the ADF. Use the scanner glass.

6. When finished, press [OK]. (If the [OK] button is displayed.)
7. Press [Colour Start] or [Mono Start].

   If you placed the document in the ADF, the machine scans the pages and starts printing.
8. **If you are using the scanner glass, repeat the following steps for each page of the document:**

- For a 2-sided document, turn the sheet over along the long edge to scan the other side.

   - Place the next page on the scanner glass, and then press [Continue] to scan the page.
   - After scanning all the pages, press [Finish].

Related Information

- Copy

Copy Options

>> DCP-L3510CDW/DCP-L3551CDW
>> MFC-L3710CW/MFC-L3735CDN/MFC-L3745CDW/MFC-L3750CDW/MFC-L3770CDW

DCP-L3510CDW/DCP-L3551CDW

To change Copy settings, press the **Options** or **Copy/Scan Options** button.

Menu selections	Options
Enlarge/Reduce	Select an enlargement or reduction ratio for the next copy. • If you select `Custom(25-400%)`, use the dial pad, or press ▲ or ▼ to enter an enlargement or reduction ratio.
Density	Increase the density to make the text darker. Decrease the density to make the text lighter.
2-sided (available only for certain models)	Select to copy on both sides of the paper. **1-sided → 2-sided** 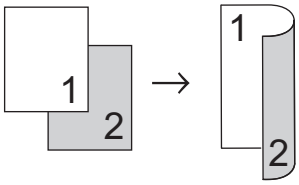 **2-sided → 2-sided** 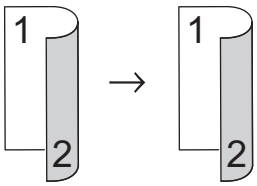
Quality	Select the copy quality for your type of document.
Contrast	Increase the contrast to make an image clearer. Decrease the contrast to make an image more subdued.
Stack/Sort	Select to stack or sort multiple copies. **Stack** 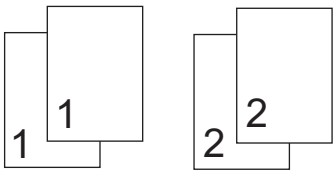 **Sort** 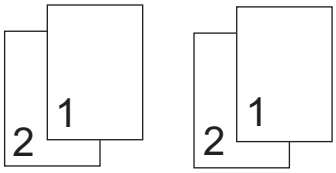

Menu selections	Options
Page Layout	Make N in 1 copies. **4 in1** 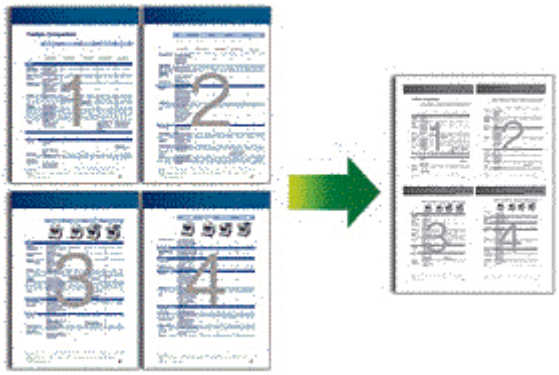
Auto Deskew	Set the machine to automatically correct skewed copies.
Colour Adjust	Change the default setting for colour saturation.
Remove Bkg Clr	Select to remove the background colour of the document when copying.

MFC-L3710CW/MFC-L3735CDN/MFC-L3745CDW/MFC-L3750CDW/MFC-L3770CDW

To change the Copy settings, press [Options].

Menu selections	Options	
Enlarge/Reduce	100%	-
	Enlarge	Select an enlargement ratio for the next copy.
	Reduce	Select a reduction ratio for the next copy.
	Custom(25-400%)	Enter an enlargement or reduction ratio.
Density	Increase the density to make the text darker. Decrease the density to make the text lighter.	
Tray Use	Select a paper tray for the next copy.	
2-sided Copy	Select to copy on both sides of the paper. **1-sided → 2-sided** 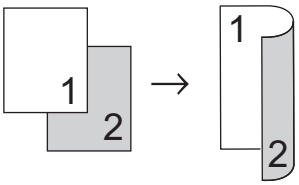 **2-sided → 2-sided** 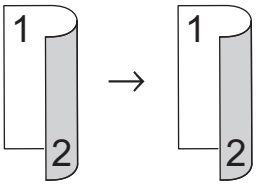 The available options will vary depending on your model.	
2-sided Copy Page Layout (available for certain settings)	Select long edge binding or short edge binding.	
Quality	Select the copy quality for your type of document.	

Menu selections	Options
Contrast	Increase the contrast to make an image clearer. Decrease the contrast to make an image more subdued.
Stack/Sort	Select to stack or sort multiple copies. **Stack** 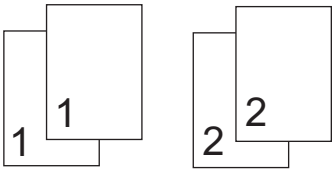 **Sort** 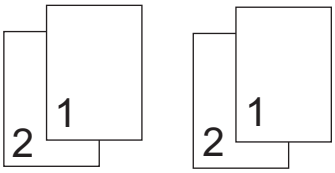
Page Layout	Make N in 1 copies. **4 in1** 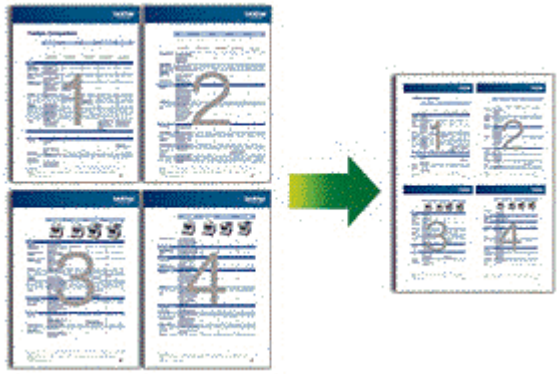
Auto Deskew	Set the machine to automatically correct skewed copies.
Colour Adjust	Change the default setting for colour saturation.
Remove Background Colour	Select to remove the background colour of the document when copying.

Related Information

- Copy

Fax

- Send a Fax
- Receive a Fax
- Voice Operations and Fax Numbers
- Telephone Services and External Devices
- Fax Reports
- PC-FAX

Send a Fax

- Send a Fax
- Send a 2-sided Fax from the ADF
- Send a Fax Manually
- Send a Fax at the End of a Conversation
- Send the Same Fax to More than One Recipient (Broadcasting)
- Send a Fax in Real Time
- Send a Fax at a Specified Time (Delayed Fax)
- Add a Cover Page to Your Fax
- Cancel a Fax in Progress
- Check and Cancel a Pending Fax
- Fax Options

Send a Fax

Related Models: MFC-L3710CW/MFC-L3735CDN/MFC-L3745CDW/MFC-L3750CDW/MFC-L3770CDW

1. Do one of the following:
   - Place the document *face up* in the ADF.
     (If you are faxing multiple pages, we recommend using the ADF.)

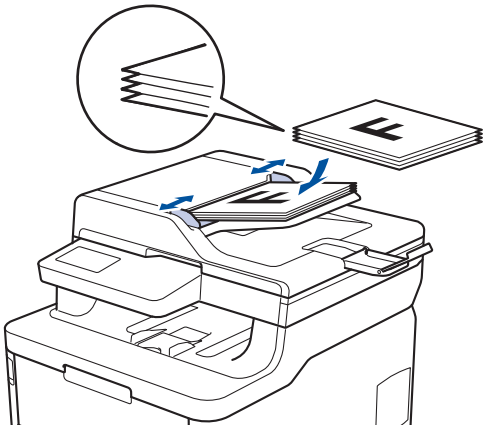

   - Place the document *face down* on the scanner glass.

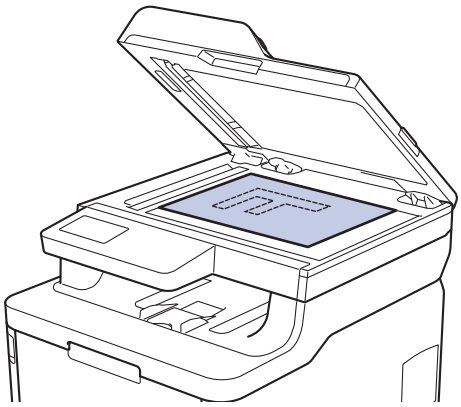

2. Press [Fax].
3. Enter the fax number.
   - **Using the dial pad**
     Press the digits to enter the fax number.

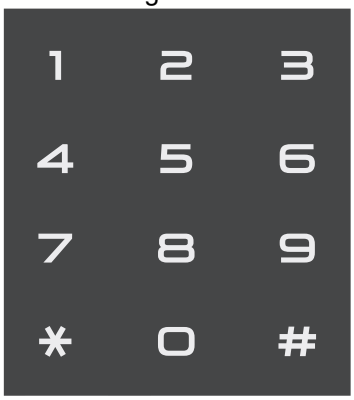

   - **Using the Address Book**
     Press [Address Book], and then do one of the following:
     - Swipe up or down or press ▲ or ▼ to display the number you want, and then press it.

- Press [Search], and then enter the name and press [OK]. Press the name you want to dial.

  When finished, press [Apply].

- **Using the call history**

  Press [Call History], and then press the [Outgoing Call] option.

  Swipe up or down or press ▲ or ▼ to display the fax number you want, and then press it.

  To send a fax, press [Apply].

4. Press [Fax Start].

   The machine scans and sends the document.

   If you placed the document on the scanner glass, follow the instructions in the table.

Option	Description
Yes	To scan the next page, press the Yes option, and then place the next page on the scanner glass. Press OK to scan the page.
No	After you have scanned the last page, press the No option. The machine sends the document.

To stop faxing, press , and then press .

Related Information

- Send a Fax

Send a 2-sided Fax from the ADF

Related Models: MFC-L3770CDW

You must select a 2-sided scanning format before sending a 2-sided fax. Select either Long Edge or Short Edge, depending on the layout of your document.

1. Load your document.
2. Press [Fax] > [Options] > [2-sided Fax].
3. Do one of the following:
   - If your document is flipped on the Long edge, press the [2-sided Scan: Long Edge] option.
   - If your document is flipped on the Short edge, press the [2-sided Scan: Short Edge] option.
4. Press [OK]. (If the [OK] button is displayed.)
5. Enter the fax number.
6. Press [Fax Start].

Related Information

- Send a Fax

Send a Fax Manually

Related Models: MFC-L3710CW/MFC-L3735CDN/MFC-L3745CDW/MFC-L3750CDW/MFC-L3770CDW

Manual fax transmission lets you hear the dialling, ringing and fax-receiving tones while sending a fax.

1. Load your document.
2. Press [Fax].
3. Press [Hook] and listen for a dial tone.
4. Dial the fax number you want to call.
5. When you hear the fax tone, press [Fax Start].
   - If you are using the scanner glass, press [Send].

Related Information

- Send a Fax

Send a Fax at the End of a Conversation

Related Models: MFC-L3710CW/MFC-L3735CDN/MFC-L3745CDW/MFC-L3750CDW/MFC-L3770CDW

At the end of a conversation, you can send a fax to the other party before you both hang up.

1. Ask the other party to wait for fax tones (beeps) and then to press the Start key before hanging up.
2. Load your document.
3. Press [Fax Start].
   - If you are using the scanner glass, press [Send].
4. Replace the handset of an external telephone.

Related Information

- Send a Fax

Send the Same Fax to More than One Recipient (Broadcasting)

Related Models: MFC-L3710CW/MFC-L3735CDN/MFC-L3745CDW/MFC-L3750CDW/MFC-L3770CDW

Use the Broadcasting feature to send the same fax to multiple fax numbers at the same time.

- The same broadcast can include Groups, Address Book numbers and up to 50 manually dialled numbers.
- Address Book numbers must be stored in the machine's memory before they can be used in a broadcast.
- Group numbers must also be stored in the machine's memory before they can be used in a broadcast. Group numbers include many stored Address Book numbers for easier dialling.

If you did not use any of the Address Book numbers for Groups, you can broadcast faxes to as many as 250 different numbers.

1. Load your document.
2. Press [Fax] > [Options] > [Broadcasting].
3. Press [Add Number].

   You can add numbers to the broadcast in the following ways:

   - Press [Add Number] and enter a number using the LCD.

     Press [OK].
   - Press [Add from Address book]. Swipe up or down or press ▲ or ▼ to display the number you want to add to the broadcast. Select the check boxes of the broadcast. After you select all the numbers you want, press [OK].
   - Press [Search in Address book]. Press the name and press [OK]. Press the name, and then press the number you want to add.
4. When finished, press [OK].
5. Press [Fax Start]. After the broadcast is finished, the machine will print a broadcast report to let you know the results.

- The machine's available memory will vary depending on the types of jobs in the memory and the numbers used for broadcasting. If you broadcast to the maximum number available, you will not be able to use dual access and delayed fax.
- If the [Out of Memory] message appears, press ✕ or [Quit] to stop the job. If more than one page has been scanned, press [Send Now] to send the portion that is in the machine's memory.

Related Information

- Send a Fax
  - Cancel a Broadcast in Progress

Cancel a Broadcast in Progress

Related Models: MFC-L3710CW/MFC-L3735CDN/MFC-L3745CDW/MFC-L3750CDW/MFC-L3770CDW

While broadcasting you can cancel the fax currently being sent or the whole broadcast job.

1. Press .
2. Press .
3. Do one of the following:
   - To cancel the entire broadcast, press `[Entire Broadcast]`.
   - To cancel the current job, press the name or number being dialled on the LCD.
   - To exit without cancelling, press .

Related Information

- Send the Same Fax to More than One Recipient (Broadcasting)

Send a Fax in Real Time

Related Models: MFC-L3710CW/MFC-L3735CDN/MFC-L3745CDW/MFC-L3750CDW/MFC-L3770CDW

When sending a fax, the machine scans the document into the memory before sending it. As soon as the telephone line is free, the machine starts dialling and sending. If you want to send an important document immediately without waiting for the machine to retrieve the scan from its memory, turn on [Real Time TX].

- If the memory is full and you are sending a fax from the ADF, the machine sends the document in real time (even if [Real Time TX] is set to [Off]). If the memory is full, faxes from the scanner glass cannot be sent until you clear some of the memory.
- In Real Time Transmission, the automatic redial feature does not work when using the scanner glass.
- If [Real Time TX] is set to on, the option to scan 2-sided documents is not available.

1. Load your document.
2. Press [Fax] > [Options] > [Real Time TX].
3. Press [On] or [Off].
4. Press [OK]. (If the [OK] button is displayed.)
5. Enter the fax number.
6. Press [Fax Start].

Related Information

- Send a Fax

Send a Fax at a Specified Time (Delayed Fax)

Related Models: MFC-L3710CW/MFC-L3735CDN/MFC-L3745CDW/MFC-L3750CDW/MFC-L3770CDW

You can store up to 50 faxes in the machine's memory to be sent within the next twenty-four hour period.

1. Load your document.
2. Press [Fax] > [Options] > [Delayed Fax] > [Delayed Fax].
3. Press [On].
4. Press [Set Time].
5. Enter the time you want the fax to be sent (in 24-hour format), and then press [OK].
   (For example, enter 19:45 for 7:45 PM.)
6. Press [OK].
7. Enter the fax number.
8. Press [Fax Start].
9. Press .

Related Information

- Send a Fax

Add a Cover Page to Your Fax

Related Models: MFC-L3710CW/MFC-L3735CDN/MFC-L3745CDW/MFC-L3750CDW/MFC-L3770CDW

You can add a cover page to the next fax or every outgoing fax.

- This feature will not work unless you have programmed your Station ID.
- Your cover page includes your Station ID, a comment, and the name stored in the Address Book.

1. Load your document.
2. Press [Fax] > [Options] > [Coverpage Setup] > [Coverpage Setup].
3. Press [On].
4. Press [Coverpage Note].
5. Swipe up or down or press ▲ or ▼ to choose the comment you want to use, and then press the comment.

   Press .
6. Press [OK]. (If the [OK] button is displayed.)
7. Enter the fax number.
8. Press [Fax Start].

The cover page will be added to the next fax. If you want to add the cover page to every outgoing fax, set the settings as the new default.

Related Information

- Send a Fax
  - Create a Cover Page Message

Create a Cover Page Message

Related Models: MFC-L3710CW/MFC-L3735CDN/MFC-L3745CDW/MFC-L3750CDW/MFC-L3770CDW

You can create one or two custom cover page messages to add to outgoing faxes.

1. Press [Settings] > [All Settings] > [Fax] > [Setup Send] > [Coverpage Note].
2. Press [5] or [6] to store your customised message.
3. Enter the cover page message using the LCD. Press [OK].

   Press A 1 @ to choose numbers, letters or special characters.
4. Press .

Related Information

- Add a Cover Page to Your Fax

Cancel a Fax in Progress

Related Models: MFC-L3710CW/MFC-L3735CDN/MFC-L3745CDW/MFC-L3750CDW/MFC-L3770CDW

1. Press .
2. Press while the machine is dialling or sending a fax.

   The LCD will display `[Cancel Job?]`.
3. Press an option in the table to cancel or continue the fax job in progress.

Option	Description
`Yes`	The machine cancels sending the fax job.
`No`	The machine exits from the process without cancelling the fax job.

Related Information

- Send a Fax

Check and Cancel a Pending Fax

Related Models: MFC-L3710CW/MFC-L3735CDN/MFC-L3745CDW/MFC-L3750CDW/MFC-L3770CDW

You can cancel a fax job before it is sent, by cancelling the fax job while it is stored and waiting in the memory.

1. Press [Settings] > [All Settings] > [Fax] > [Remaining Jobs].
2. Swipe up or down or press ▲ or ▼ to scroll through the waiting jobs, and then press the job you want to cancel.
3. Press [Cancel].
4. Press [Yes] to confirm or press [No] to exit without cancelling.
5. When finished cancelling jobs, press .

Related Information

- Send a Fax

Fax Options

Related Models: MFC-L3710CW/MFC-L3735CDN/MFC-L3745CDW/MFC-L3750CDW/MFC-L3770CDW

To change fax-sending settings, press the [Options] button.

Option	Description
Fax Resolution	Set the resolution for outgoing faxes. The fax quality often can be improved by changing the Fax Resolution.
Contrast	Adjust the contrast. If your document is very light or very dark, changing the contrast may improve the fax quality.
2-sided Fax (For automatic 2-sided scanning models)	Set the 2-sided scanning format.
Glass Scan Size	Adjust the scan area of the scanner glass to the size of the document.
Broadcasting	Send the same fax message to more than one fax number at the same time.
Delayed Fax	Set the time of day the delayed faxes will be sent.
Real Time TX	Send a fax immediately without waiting for the machine to retrieve the scan from its memory.
Coverpage Setup	Set the machine to automatically send a pre-programmed cover page.
Overseas Mode	Set to On if you have difficulty sending faxes overseas.
Set New Default	Save your settings as the default.
Factory Reset	Restore all settings back to the factory settings.

You can save the current settings by pressing [Save as Shortcut].

Related Information

- Send a Fax

Receive a Fax

- Receive Mode Settings
- Memory Receive Options
- Remote Fax Retrieval

Receive Mode Settings

- Receive Modes Overview
- Choose the Correct Receive Mode
- Set the Number of Rings Before the Machine Answers (Ring Delay)
- Set the F/T Ring Time (Fast Double-ring)
- Set Easy Receive
- Shrink Page Size of an Oversized Incoming Fax
- Set the 2-sided Printing for Received Faxes
- Set the Fax Receive Stamp
- Receive a Fax at the End of a Telephone Conversation
- Register a Number in the Blocked List

Receive Modes Overview

Related Models: MFC-L3710CW/MFC-L3735CDN/MFC-L3745CDW/MFC-L3750CDW/MFC-L3770CDW

Some receive modes answer automatically (Fax Only Mode and Fax/Tel Mode). You may want to change the Ring Delay before using these modes.

Fax Only Mode

(`[Fax Only]` in the machine's menu)

Fax Only Mode automatically answers every call as a fax.

Fax/Tel Mode

(`[Fax/Tel]` in the machine's menu)

Fax/Tel Mode helps you manage incoming calls, by recognising whether they are fax or voice calls and handling them in the following ways:

- Faxes will be received automatically.
- Voice calls will start the F/T ring to tell you to pick up the call. The F/T ring is a fast pseudo/double-ring made by your machine.

Manual Mode

(`[Manual]` in the machine's menu)

To receive a fax in Manual Mode, lift the handset of the external telephone connected to the machine or press the button in the table.

Applicable Models	Alternate way to lift the handset
MFC-L3710CW/MFC-L3735CDN/MFC-L3745CDW/MFC-L3750CDW/ MFC-L3770CDW	`Fax` and then `Hook`

When you hear fax tones (short repeating beeps), press the buttons in the table to receive a fax. Use the Easy Receive feature to receive faxes when you have lifted a handset on the same line as the machine.

Applicable Models	To receive the fax
Touchscreen LCD models	> `Fax` `Start` > `Receive`

External TAD Mode

(`[External TAD]` in the machine's menu)

External TAD Mode lets an external answering device manage your incoming calls.

Incoming calls will be handled in the following ways:

- Faxes will be received automatically.
- Voice callers can record a message on the external TAD.

Related Information

- Receive Mode Settings

Choose the Correct Receive Mode

Related Models: MFC-L3710CW/MFC-L3735CDN/MFC-L3745CDW/MFC-L3750CDW/MFC-L3770CDW

You must choose a Receive Mode depending on the external devices and telephone services you have on your line.

By default, your machine will automatically receive any faxes that are sent to it. The diagram below will help you select the correct mode.

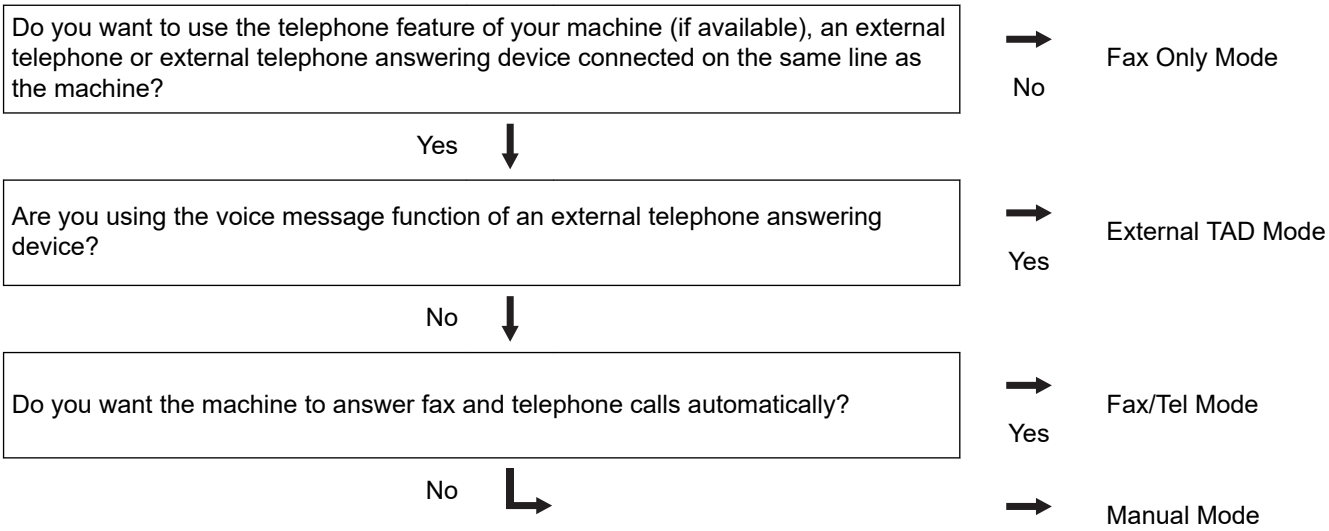

1. Press [Settings] > [All Settings] > [Fax] > [Setup Receive] > [Receive Mode].
2. Press [Fax Only], [Fax/Tel], [External TAD], or [Manual].
3. Press .

Related Information

- Receive Mode Settings

Related Topics:

- Telephone and Fax Problems

Set the Number of Rings Before the Machine Answers (Ring Delay)

Related Models: MFC-L3710CW/MFC-L3735CDN/MFC-L3745CDW/MFC-L3750CDW/MFC-L3770CDW

When somebody calls your machine, you will hear the normal telephone ring sound. The number of rings is set in the Ring Delay option.

- The Ring Delay setting sets the number of times the machine rings before it answers in the Fax Only and Fax/Tel Modes.
- If you have external or extension telephones on the same line as the machine, choose the maximum number of rings.

1. Press [Settings] > [All Settings] > [Fax] > [Setup Receive] > [Ring Delay].
2. Press the number of rings you want.

If you select [0], the machine will answer immediately and the line will not ring at all (available only for some countries).

3. Press .

Related Information

- Receive Mode Settings

Related Topics:

- Telephone and Fax Problems

Set the F/T Ring Time (Fast Double-ring)

Related Models: MFC-L3710CW/MFC-L3735CDN/MFC-L3745CDW/MFC-L3750CDW/MFC-L3770CDW

When you set the Receive Mode to Fax/Tel Mode, if the call is a fax, your machine will automatically receive it. However, if it is a voice call, the machine will sound the F/T ring (fast double-ring) for the time you set in the F/T Ring Time option. When you hear the F/T ring, it means that a voice caller is on the line.

- The F/T Ring Time feature works when you set Fax/Tel Mode as the Receive Mode.

Because the F/T ring is made by the machine, extension and external telephones will not ring; however, you can still answer the call on any telephone.

1. Press [Settings] > [All Settings] > [Fax] > [Setup Receive] > [F/T Ring Time].
2. Press how long you want the machine to ring to alert you that you have a voice call.
3. Press .

Even if the caller hangs up during the pseudo/double-ringing, the machine will continue to ring for the set time.

Related Information

- Receive Mode Settings

Set Easy Receive

Related Models: MFC-L3710CW/MFC-L3735CDN/MFC-L3745CDW/MFC-L3750CDW/MFC-L3770CDW

If Easy Receive is On: The machine can receive a fax automatically, even if you answer the call. When you see [Receiving] on the LCD or hear a click on the phone line through the handset you are using, just replace the handset. Your machine will do the rest.

If Easy Receive is Off: If you are at the machine and answer a fax call first by lifting the external handset, press the buttons in the following table to receive the fax. If you answered at an extension telephone, press ***51**.

Applicable Models	To receive the fax
MFC-L3710CW/MFC-L3735CDN/MFC-L3745CDW/ MFC-L3750CDW/MFC-L3770CDW	> Fax Start > Receive

- If this feature is set to [On], but your machine does not connect a fax call when you lift an extension or external telephone handset, press the fax receive code ***51**.
- If you send faxes from a computer on the same telephone line and the machine intercepts them, set Easy Receive to [Off].

1. Press [Settings] > [All Settings] > [Fax] > [Setup Receive] > [Fax Detect].
2. Press [On] or [Off].
3. Press .

Related Information

- Receive Mode Settings

Shrink Page Size of an Oversized Incoming Fax

Related Models: MFC-L3710CW/MFC-L3735CDN/MFC-L3745CDW/MFC-L3750CDW/MFC-L3770CDW

If you enable the auto reduction function, the machine reduces each page of an incoming fax to fit on your paper. The machine calculates the reduction ratio by using the page size of the fax and your Paper Size setting.

1. Press [Settings] > [All Settings] > [Fax] > [Setup Receive] > [Auto Reduction].
2. Press [On] or [Off].
3. Press .

Related Information

- Receive Mode Settings

Set the 2-sided Printing for Received Faxes

Related Models: MFC-L3735CDN/MFC-L3745CDW/MFC-L3750CDW/MFC-L3770CDW

Your machine prints received faxes on both sides of the paper when [2-sided] is set to [On].

- Use A4 size paper (60 to 105 g/m^2) for this function.
- When 2-sided printing is enabled, incoming faxes are automatically reduced to fit the paper in the paper tray.

1. Press [Settings] > [All Settings] > [Fax] > [Setup Receive] > [2-sided].
2. Press [On] or [Off].
3. Press .

Related Information

- Receive Mode Settings

Set the Fax Receive Stamp

Related Models: MFC-L3710CW/MFC-L3735CDN/MFC-L3745CDW/MFC-L3750CDW/MFC-L3770CDW

You can set the machine to print the received date and time at the top centre of each received fax page.

- Make sure you have set the current date and time on the machine.

1. Press [Settings] > [All Settings] > [Fax] > [Setup Receive] > [Fax Rx Stamp].
2. Press [On] or [Off].
3. Press .

Related Information

- Receive Mode Settings

Receive a Fax at the End of a Telephone Conversation

Related Models: MFC-L3710CW/MFC-L3735CDN/MFC-L3745CDW/MFC-L3750CDW/MFC-L3770CDW

If you are speaking on the telephone connected to your Brother machine and the other party is also speaking on a telephone connected to his fax machine, at the end of the conversation, the other party can send you a fax before you both hang up.

Your machine's ADF must be empty.

1. Ask the other party to place the document in their machine and to press the Start or Send key.
2. When you hear the CNG tones (slowly repeating beeps), press `[Fax Start]`.

If the machine is in Automatic Redial, wait until it is finished and try again.

3. Press `[Receive]` to receive a fax.
4. Replace the external handset.

Related Information

- Receive Mode Settings

Register a Number in the Blocked List

Related Models: MFC-L3710CW/MFC-L3735CDN/MFC-L3745CDW/MFC-L3750CDW/MFC-L3770CDW

If you do not want to receive faxes or calls from specific numbers, register the numbers to your list of blocked callers. The machine can register up to 100 fax or telephone numbers from the caller ID memory.

- You must apply for the Caller ID service at your local telephone company.
- The number you want to register must be stored in the caller ID memory.

The Caller ID feature is not available in some countries.

1. Press [Settings] > [All Settings] > [Fax] > [Anti-Junk Fax].
2. Press [Register].

- To delete the number, select [Delete] and then press [OK].
- To print the blocked list, press [Print Reports] and then follow the on-screen menus.

3. Swipe up or down or press ▲ or ▼ to display the number you want, and then press the number.
4. Press [Yes] to confirm.
5. Press .

Related Information

- Receive Mode Settings

Memory Receive Options

Related Models: MFC-L3710CW/MFC-L3735CDN/MFC-L3745CDW/MFC-L3750CDW/MFC-L3770CDW

Use Memory Receive options to direct incoming faxes while you are away from the machine. You can use only one Memory Receive option at a time.

Memory Receive can be set to:

- Fax Forwarding
- Fax Storage
- PC-Fax Receive
- Forward to Cloud

  The machine forwards your received faxes to online services.
- Off

- Forward Incoming Faxes to Another Machine
- Store Incoming Faxes in the Machine's Memory
- Change Memory Receive Options
- Turn Off Memory Receive
- Print a Fax Stored in the Machine's Memory
- Use PC-Fax Receive to Transfer Received Faxes to Your Computer (Windows only)

Forward Incoming Faxes to Another Machine

Related Models: MFC-L3710CW/MFC-L3735CDN/MFC-L3745CDW/MFC-L3750CDW/MFC-L3770CDW

Use the Fax Forwarding feature to automatically forward your incoming faxes to another machine.

1. Press [Settings] > [All Settings] > [Fax] > [Setup Receive] > [Memory Receive].
2. Press [Fax Forward].
3. Do one of the following:
   - Press [Manual] to enter the forwarding fax number (up to 20 characters) using the LCD.

     Press [OK].
   - Press [Address Book].

     Swipe up or down or press ▲ or ▼ to scroll until you find the fax number or email address where you want your faxes to be forwarded.

     Press the fax number or email address you want.

   - Press [Backup Print: On] or [Backup Print: Off]. If you select [Backup Print: On], the machine also prints a copy of received faxes at your machine.

4. Press .

Related Information

- Memory Receive Options

Store Incoming Faxes in the Machine's Memory

Related Models: MFC-L3710CW/MFC-L3735CDN/MFC-L3745CDW/MFC-L3750CDW/MFC-L3770CDW

Use the Fax Storage feature to store incoming faxes in the machine's memory. Retrieve your stored fax messages from your fax machine when you are at another location using the Remote Retrieval commands. Your machine will print a backup copy of each stored fax.

1. Press [Settings] > [All Settings] > [Fax] > [Setup Receive] > [Memory Receive].
2. Swipe up or down or press ▲ or ▼ to display the [Fax Storage] option, and then press [Fax Storage].

   Press [Backup Print: On] or [Backup Print: Off]. If you select [Backup Print: On], the machine also prints a copy of received faxes at your machine.

3. Press .

Related Information

- Memory Receive Options

Change Memory Receive Options

Related Models: MFC-L3710CW/MFC-L3735CDN/MFC-L3745CDW/MFC-L3750CDW/MFC-L3770CDW

If received faxes are in your machine's memory when you change the Remote Fax operations, the LCD will ask you one of the following questions:

If received faxes have been printed automatically, the LCD displays `[Erase all documents?]`

- Do one of the following:
  - If you press `[Yes]`, faxes in the memory will be erased before the setting changes.
  - If you press `[No]`, faxes in the memory will not be erased and the setting will be unchanged.

If unprinted faxes are in the machine's memory, the LCD displays `[Print all faxes?]`

- Do one of the following:
  - If you press `[Yes]`, faxes in the memory will be printed before the setting changes.
  - If you press `[No]`, faxes in the memory will not be printed and the setting will be unchanged.

If received faxes are left in the machine's memory when you change to `[PC Fax Receive]` from another option (`[Fax Forward]` or `[Fax Storage]`).

- Press `[<USB>]` or the name of the computer if you are on a network, and then press `[OK]`. You will be asked if you want to turn on Backup Print.

  The LCD displays:

  `[Send Fax to PC?]`

  - If you press `[Yes]`, faxes in the memory will be sent to your computer before the setting changes.
  - If you press `[No]`, faxes in the memory will not be erased and the setting will be unchanged.

Related Information

- Memory Receive Options

Turn Off Memory Receive

Related Models: MFC-L3710CW/MFC-L3735CDN/MFC-L3745CDW/MFC-L3750CDW/MFC-L3770CDW

Turn off Memory Receive if you do not want the machine to save or transfer incoming faxes.

1. Press [Settings] > [All Settings] > [Fax] > [Setup Receive] > [Memory Receive].
2. Press [Off].

The LCD displays options if there are received faxes still in your machine's memory.

3. Press .

Related Information

- Memory Receive Options

Print a Fax Stored in the Machine's Memory

Related Models: MFC-L3710CW/MFC-L3735CDN/MFC-L3745CDW/MFC-L3750CDW/MFC-L3770CDW

If you select [Fax Storage], you can still print a fax from the memory when you are at your machine.

1. Press [Settings] > [All Settings] > [Fax] > [Print Document].
2. Press [Yes].

Related Information

- Memory Receive Options

Related Topics:

- Error and Maintenance Messages

Use PC-Fax Receive to Transfer Received Faxes to Your Computer (Windows only)

Related Models: MFC-L3710CW/MFC-L3735CDN/MFC-L3745CDW/MFC-L3750CDW/MFC-L3770CDW

Turn on the PC-Fax Receive feature, automatically store incoming faxes to your machine's memory, and then send them to your computer. Use your computer to view and store these faxes.

To transfer the received faxes to your computer you must have the PC-FAX Receiving software running on your computer.

Even if you have turned off your computer (at night or on the weekend, for example), your machine will receive and store your faxes in its memory.

When you start your computer and the PC-FAX Receiving software runs, your machine transfers your faxes to your computer automatically.

If you selected [Backup Print: On], the machine will also print the fax.

1. Press [Settings] > [All Settings] > [Fax] > [Setup Receive] > [PC Fax Receive].
2. Press [On].
3. Press [OK], and then follow the instructions on the LCD.

- PC-Fax Receive is not available for the Mac operating systems.
- If you get an error message and the machine cannot print the faxes in the memory, you can use this setting to transfer your faxes to your computer.

4. Press [<USB>] or the name of the computer you want to receive faxes if you are on a network, and then press [OK].
5. Press [Backup Print: On] or [Backup Print: Off].
6. Press .

Related Information

- Memory Receive Options

Remote Fax Retrieval

Use Remote Retrieval to call your machine from any touch-tone telephone or fax machine, and use a remote access code and remote commands to retrieve fax messages.

- Set a Remote Access Code
- Use Your Remote Access Code
- Remote Retrieval Commands
- Forward Faxes Remotely
- Change the Fax Forwarding Number

Set a Remote Access Code

Related Models: MFC-L3710CW/MFC-L3735CDN/MFC-L3745CDW/MFC-L3750CDW/MFC-L3770CDW

Set a Remote Access Code to access and control your Brother machine even when you are away from it.

Before you can use the remote access and retrieval features, you must set up your own code. The factory default code is the inactive code (---*).

1. Press [Settings] > [All Settings] > [Fax] > [Remote Access].
2. Enter a three-digit code using the numbers [0] to [9], [*] or [#] using the LCD (the preset '*' cannot be changed), and then press [OK].

- DO NOT use the same code used for your Fax Receive Code (*51) or Telephone Answer Code (#51).
- To make your code inactive, press and hold to restore the inactive setting (---*), and then press [OK].

3. Press .

Related Information

- Remote Fax Retrieval

Use Your Remote Access Code

Related Models: MFC-L3710CW/MFC-L3735CDN/MFC-L3745CDW/MFC-L3750CDW/MFC-L3770CDW

1. Dial your fax number from a telephone or another fax machine using touch tone.
2. When your machine answers, immediately enter your Remote Access Code (three digits followed by *).
3. The machine signals if it has received messages:
   - One long beep -- Fax messages
   - No beeps -- No messages
4. When the machine gives two short beeps, enter a command.
   - The machine will hang up if you wait longer than 30 seconds to enter a command.
   - The machine will beep three times if you enter an invalid command.
5. Press 9 0 to reset the machine when you are finished.
6. Hang up.
   - This function may not be available in some countries or supported by your local telephone company.

Related Information

- Remote Fax Retrieval

Remote Retrieval Commands

Related Models: MFC-L3710CW/MFC-L3735CDN/MFC-L3745CDW/MFC-L3750CDW/MFC-L3770CDW

Use the Remote Commands in this table to access fax commands and options when you are away from your Brother machine. When you call the machine and enter your remote access code (three digits followed by *), the system will sound two short beeps and you must enter a Remote Command (column 1), followed by one of the options (column 2) for that command.

Remote commands	Options	Operation details
95	**Change the Fax Forwarding, or Fax Storage settings**	
	1 OFF	You can select *Off* after you retrieve or erase all your messages.
	2 Fax Forwarding	One long beep means the change is accepted. If you hear three short beeps, you cannot make a change because something has not been set up (for example, a Fax Forwarding number has not been registered). You can register your Fax Forwarding number by entering 4. After you register the number, Fax Forwarding will work.
	4 Fax Forwarding number	
	6 Fax Storage	
96	**Retrieve a fax**	
	2 Retrieve all faxes	Enter the fax number of a remote fax machine to receive stored fax messages.
	3 Erase faxes from memory	If you hear one long beep, fax messages have been erased from memory.
97	**Check the receiving status**	
	1 Fax	Check whether your machine has received any faxes. If yes, you will hear one long beep. If not, you will hear three short beeps.
98	**Change the Receive Mode**	
	1 External TAD	One long beep means the change has been accepted.
	2 Fax/Tel	
	3 Fax Only	
90	**Exit**	Press **9 0** to stop remote retrieval. Wait for the long beep, then hang up.

Related Information

- Remote Fax Retrieval

Forward Faxes Remotely

Related Models: MFC-L3710CW/MFC-L3735CDN/MFC-L3745CDW/MFC-L3750CDW/MFC-L3770CDW

Call your Brother machine from any touch-tone telephone or fax machine to forward incoming faxes to another machine.

You must turn on Fax Storage to use this feature.

1. Dial your fax number.
2. When your machine answers, enter your Remote Access Code (three digits followed by *). If you hear one long beep, you have messages.
3. When you hear two short beeps, press 9 6 2.
4. Wait for the long beep, and then use the dial pad to enter the number of the remote fax machine where you want your fax messages sent, followed by # # (up to 20 digits).

You cannot use * and # as dial numbers. However, press # if you want to create a pause.

5. Hang up after you hear your machine beep. Your machine will call the other fax machine, which will then print your fax messages.

Related Information

- Remote Fax Retrieval

Change the Fax Forwarding Number

Related Models: MFC-L3710CW/MFC-L3735CDN/MFC-L3745CDW/MFC-L3750CDW/MFC-L3770CDW

You can change your fax forwarding number from another touch-tone telephone or fax machine.

1. Dial your fax number.
2. When your machine answers, enter your Remote Access Code (three digits followed by *). If you hear one long beep, you have messages.
3. When you hear two short beeps, press 9 5 4.
4. Wait for the long beep, enter the new number (up to 20 digits) of the remote fax machine you want your fax messages forwarded to using the dial pad, then enter # #.

   You will hear one long beep.

   You cannot use * and # as dial numbers. However, press # if you want to create a pause.

5. When you hear two short beeps, press 9 0 to stop Remote Access when you have finished.
6. Hang up after you hear your machine beep.

Related Information

- Remote Fax Retrieval

Voice Operations and Fax Numbers

- Voice Operations
- Store Fax Numbers
- Set up Groups for Broadcasting
- Dial Access Codes and Credit Card Numbers

Voice Operations

- Send Tone Signals
- Pick up a Voice Call in Fax/Tel Receive Mode

Send Tone Signals

Related Models: MFC-L3710CW/MFC-L3735CDN/MFC-L3745CDW/MFC-L3750CDW/MFC-L3770CDW

If you have a Pulse dialling service, but must send Tone signals (for example, for telephone banking), follow these steps. If you have a Touch Tone service, you will not need this feature to send tone signals.

1. Press [Fax].
2. Press [Hook].
3. Press # on the machine's LCD.
   Any digits dialled after this will send tone signals.

When you are finished with the call, the machine will return to the Pulse dialling service.

Related Information

- Voice Operations

Pick up a Voice Call in Fax/Tel Receive Mode

Related Models: MFC-L3710CW/MFC-L3735CDN/MFC-L3745CDW/MFC-L3750CDW/MFC-L3770CDW

When the machine is in Fax/Tel mode, it will use the F/T Ring (pseudo/double-ring) to alert you to pick up a voice call.

If you are at the machine, lift the external telephone's handset, and then press the button in the following table to answer:

Applicable Models	To pick up voice call
MFC-L3710CW/MFC-L3735CDN/MFC-L3745CDW/ MFC-L3750CDW/MFC-L3770CDW	`Pickup`

If you are at an extension telephone, lift the handset during the F/T Ring and then press #51 between the pseudo/double rings. If no one is on the line, or if someone wants to send you a fax, send the call back to the machine by pressing *51.

Related Information

- Voice Operations

Store Fax Numbers

Related Models: MFC-L3710CW/MFC-L3735CDN/MFC-L3745CDW/MFC-L3750CDW/MFC-L3770CDW

- Store Address Book Numbers
- Change or Delete Address Book Names or Numbers

Store Address Book Numbers

Related Models: MFC-L3710CW/MFC-L3735CDN/MFC-L3745CDW/MFC-L3750CDW/MFC-L3770CDW

1. Press [Fax] > [Address Book].
2. Do the following steps:
   a. Press [Edit].
   b. Press [Add New Address].
   c. Press [Name].
   d. Enter the name using the LCD (up to 16 characters), and then press [OK].
   e. Press [Address].
   f. Enter the fax or telephone number using the LCD (up to 20 digits), and then press [OK].
   g. Press [OK].

   To store another Address Book number, repeat these steps.
3. Press .

Related Information

- Store Fax Numbers
  - Store Address Book Numbers from Outgoing Calls

Store Address Book Numbers from Outgoing Calls

Related Models: MFC-L3710CW/MFC-L3735CDN/MFC-L3745CDW/MFC-L3750CDW/MFC-L3770CDW

You can store Address Book numbers from the Outgoing Call history.

1. Press [Fax] > [Call History] > [Outgoing Call].
2. Swipe up or down or press ▲ or ▼ to display the number you want, and then press it.
3. Press [Edit] > [Add to Address Book] > [Name].

To delete the number, press [Edit] > [Delete]. Press [Yes] to confirm.

4. Enter the name using the LCD (up to 16 characters).
5. Press [OK].
6. Press [OK] to confirm the fax or telephone number you want to store.
7. Press .

Related Information

- Store Address Book Numbers

Change or Delete Address Book Names or Numbers

Related Models: MFC-L3710CW/MFC-L3735CDN/MFC-L3745CDW/MFC-L3750CDW/MFC-L3770CDW

1. Press [Fax] > [Address Book] > [Edit].
2. Do one of the following:
   - Press [Change] to edit the names or fax or telephone numbers.

     Swipe up or down or press ▲ or ▼ to display the number you want to change, and then press it.
     - To change the name, press [Name]. Enter the new name (up to 16 characters) using the LCD, and then press [OK].
     - To change the fax or telephone number, press [Address]. Enter the new fax or telephone number (up to 20 digits) using the LCD, and then press [OK].

     Press [OK] to finish.

     How to enter text:

     To change a character, press ◀ or ▶ to position the cursor to highlight the incorrect character, and then press .

     Enter the new character.
   - To delete numbers, press [Delete].
     - Select the fax or telephone numbers you want to delete by pressing them to display a red check mark, and then press [OK].
3. Press .

Related Information

- Store Fax Numbers

Set up Groups for Broadcasting

Related Models: MFC-L3710CW/MFC-L3735CDN/MFC-L3745CDW/MFC-L3750CDW/MFC-L3770CDW

A Group, which can be stored in the Address Book allows you to send the same fax message to many fax numbers.

First, you must store each fax number in the Address Book. Then you can include them as numbers in the Group. Each Group uses up an Address Book number.

Applicable Models	Maximum number of Group	Maximum numbers in a large Group
MFC-L3710CW/MFC-L3735CDN/ MFC-L3745CDW/MFC-L3750CDW/ MFC-L3770CDW	20 groups	199 numbers

1. Press [Fax] > [Address Book].
2. Do the following steps:
   a. Press [Edit] > [Setup Groups] > [Name].
   b. Enter the Group name (up to 16 characters) using the LCD, and then press [OK].
   c. Press [Add/Delete].
   d. Add Address Book numbers to the Group by pressing them to display a red checkmark, and then press [OK].
   e. Read and confirm the displayed list of names and numbers you have chosen, and then press [OK] to save your Group.

   To store another Group for broadcasting, repeat these steps.
3. Press .

Related Information

- Voice Operations and Fax Numbers
  - Change a Broadcasting Group Name
  - Delete a Broadcasting Group
  - Add or Delete a Broadcasting Group Member

Change a Broadcasting Group Name

Related Models: MFC-L3710CW/MFC-L3735CDN/MFC-L3745CDW/MFC-L3750CDW/MFC-L3770CDW

1. Press [Fax] > [Address Book] > [Edit] > [Change].
2. Swipe up or down or press ▲ or ▼ to display the Group you want, and then press the Group name.
3. Press [Name].
4. Enter the new Group name (up to 16 characters) using the LCD, and then press [OK].

How to change the stored name:

To change a character, press ◀ or ▶ to position the cursor to highlight the incorrect character, and then press ⌫.

Enter the new character.

5. Press [OK].
6. Press ⌂.

Related Information

- Set up Groups for Broadcasting

Delete a Broadcasting Group

Related Models: MFC-L3710CW/MFC-L3735CDN/MFC-L3745CDW/MFC-L3750CDW/MFC-L3770CDW

1. Press [Fax] > [Address Book] > [Edit] > [Delete].
2. Swipe up or down or press ▲ or ▼ to display the Group you want, and then press the Group name.
3. Press [OK].
4. Press .

Related Information

- Set up Groups for Broadcasting

Add or Delete a Broadcasting Group Member

Related Models: MFC-L3710CW/MFC-L3735CDN/MFC-L3745CDW/MFC-L3750CDW/MFC-L3770CDW

1. Press [Fax] > [Address Book] > [Edit] > [Change].
2. Swipe up or down or press ▲ or ▼ to display the Group you want, and then press the Group name.
3. Swipe up or down or press ▲ or ▼ to display the [Add/Delete] option, and then press [Add/Delete].
4. Swipe up or down or press ▲ or ▼ to display the number you want to add or delete.
5. Do the following for each number you want to change:
   - To add a number to the Group, press the check box of the number to add a check mark.
   - To delete a number from the Group, press the check box of the number to remove the check mark.
6. Press [OK].
7. Press [OK].
8. Press .

Related Information

- Set up Groups for Broadcasting

Dial Access Codes and Credit Card Numbers

Related Models: MFC-L3710CW/MFC-L3735CDN/MFC-L3745CDW/MFC-L3750CDW/MFC-L3770CDW

Sometimes you may want to choose from several long-distance carriers when you send a fax. Rates may vary depending on the time and destination. To take advantage of low rates, you can store the access codes of long-distance carriers and credit card numbers as Address Book numbers.

You can store these long dialling sequences by dividing them and setting them up as separate Address Book numbers in any combination. You can even include manual dialling using the dial pad.

For example: You might have stored '01632' and '960555' in your machine as shown in the following table.

Applicable Models	'01632' stored in	'960555' stored in
MFC-L3710CW/MFC-L3735CDN/ MFC-L3745CDW/MFC-L3750CDW/ MFC-L3770CDW	Address Book: Brother 1	Address Book: Brother 2

You can use them both to dial '01632-960555' by using the following procedure.

1. Press [Fax] > [Address Book].
2. Swipe up or down or press ▲ or ▼ to display the number of Brother 1.
3. Press the number.
4. Press [Apply].
5. Press [Address Book].
6. Press [OK].
7. Swipe up or down or press ▲ or ▼ to display the number of Brother 2.
8. Press the number.
9. Press [Apply].
10. Press [Fax Start].

    The machine will dial '555-7000'.

To temporarily change a number, you can substitute part of the number by pressing it using the LCD. For example, to change the number to '01632-960556', you could enter the number (Brother 1: 01632) using Address Book, press [Apply], and then press 960556 using the LCD.

If you must wait for another dial tone or signal at any point in the dialling sequence, create a pause in the number by pressing [Pause].

Related Information

- Voice Operations and Fax Numbers

Telephone Services and External Devices

- Caller ID
- External TAD (Telephone Answering Device)
- External and Extension Telephones
- Multi-line Connections (PBX)

Caller ID

Related Models: MFC-L3710CW/MFC-L3735CDN/MFC-L3745CDW/MFC-L3750CDW/MFC-L3770CDW

The Caller ID feature lets you use the Caller ID subscriber service offered by many local telephone companies. This service displays the telephone number, or name if it is available, of your caller as the line rings.

- The `[ID Unknown]` message means the call originated outside your Caller ID service area.
- The `[ID Withheld]` message means the caller has intentionally blocked transmission of Caller ID information.

Call your telephone company for more information.

Once you answer a call, the Caller ID information disappears from the LCD and is stored in Caller ID memory.

View the list or select a number and add it to the Address Book (the Speed Dial or One the Touch Dial in some models), or delete it from the history.

You can print a list of the Caller ID information received by your machine.

- This feature is not available in some countries.
- The Caller ID service varies with different carriers. Contact your local telephone company to learn about the service available in your area.

Related Information

- Telephone Services and External Devices

External TAD (Telephone Answering Device)

Related Models: MFC-L3710CW/MFC-L3735CDN/MFC-L3745CDW/MFC-L3750CDW/MFC-L3770CDW

You can connect an external Telephone Answering Device (TAD) to the same line as your machine. When the TAD answers a call, your machine will “listen” for the CNG (fax calling) tones sent by a sending fax machine. If it hears them it will take over the call and receive the fax. If it does not hear them, it will let your TAD take a voice message and the LCD will show `[Telephone]`.

The external TAD must answer within two rings (we recommend setting it to two rings). This is because your machine cannot hear the CNG tones until the external TAD has picked up the call. The sending machine will send CNG tones for only eight to ten seconds longer. We do not recommend using the toll saver feature on your external TAD if it needs more than four rings to activate it.

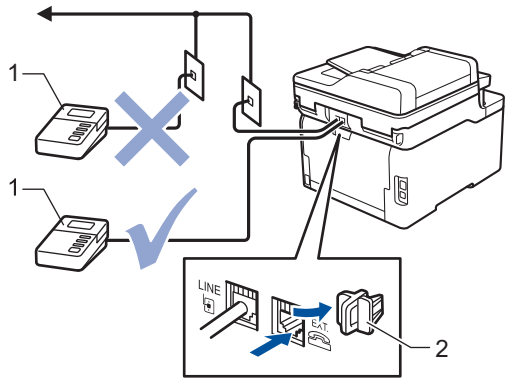

1 TAD
2 Protective Cap

IMPORTANT

DO NOT connect a TAD elsewhere on the same telephone line.

If you have problems receiving faxes, reduce the Ring Delay setting on your external TAD.

Related Information

- Telephone Services and External Devices
  - Connect an External TAD
  - Record an Outgoing Message (OGM) on the External TAD

Connect an External TAD

Related Models: MFC-L3710CW/MFC-L3735CDN/MFC-L3745CDW/MFC-L3750CDW/MFC-L3770CDW

The external TAD must be plugged into the back of the machine, into the jack labeled EXT. Your machine cannot work correctly if you plug the TAD into a wall jack (unless you are using Distinctive Ring).

1. Plug the telephone line cord from the telephone wall jack into the back of the machine, in the jack labeled LINE.
2. Plug the telephone line cord from your external TAD into the back of the machine, in the jack labeled EXT. (Make sure this cord is connected to the TAD at the TAD's telephone line jack, and not its handset jack.)
3. Set your external TAD to the minimum number of rings allowed. For more information, contact your telephone provider. (The machine's Ring Delay setting does not apply.)
4. Record an outgoing message on your external TAD.
5. Set the TAD to answer calls.
6. Set the Receive Mode on your machine to `[External TAD]`.

Related Information

- External TAD (Telephone Answering Device)

Record an Outgoing Message (OGM) on the External TAD

Related Models: MFC-L3710CW/MFC-L3735CDN/MFC-L3745CDW/MFC-L3750CDW/MFC-L3770CDW

1. Record 5 seconds of silence at the beginning of your message. This allows your machine time to listen for fax tones.
2. Limit your speaking to 20 seconds.
3. End your 20-second message by giving your Fax Receive Code for people sending manual faxes. For example: “After the beep, leave a message or press *51 and Start to send a fax.”

NOTE

We recommend beginning your OGM with an initial 5 second silence because the machine cannot hear fax tones over a loud voice. You may try leaving out this pause, but if your machine has trouble receiving faxes, then you should re-record the OGM to include it.

Related Information

- External TAD (Telephone Answering Device)

External and Extension Telephones

- Connect an External or Extension Telephone
- Operation from External and Extension Telephones
- If You Use a Non-Brother Cordless External Handset
- Use the Remote Codes

Connect an External or Extension Telephone

Related Models: MFC-L3710CW/MFC-L3735CDN/MFC-L3745CDW/MFC-L3750CDW/MFC-L3770CDW

You can connect a separate telephone to your machine as shown in the diagram below.

Connect the telephone line cord to the jack labeled EXT.

Before you connect an external telephone, remove the protective cap (3) from the EXT. jack on the machine.

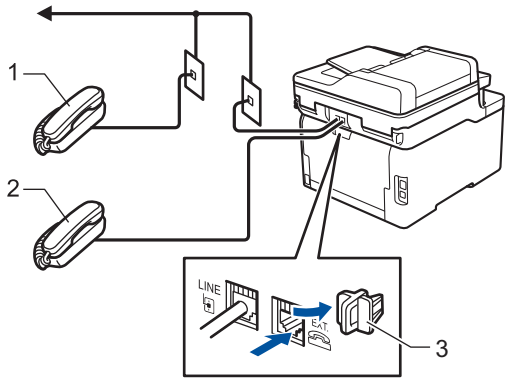

1 Extension telephone
2 External telephone
3 Protective Cap

Related Information

- External and Extension Telephones

Operation from External and Extension Telephones

Related Models: MFC-L3710CW/MFC-L3735CDN/MFC-L3745CDW/MFC-L3750CDW/MFC-L3770CDW

Use extension telephones

If you answer a fax call at an extension telephone, you can make your machine receive the fax by pressing the Fax Receive Code ***51**.

If the machine answers a voice call and pseudo/double-rings for you to take over, you can take the call at an extension telephone by pressing the Telephone Answer Code **#51**.

Use an external telephone (Connected to the EXT. jack of the machine)

If you answer a fax call at the external telephone connected to the EXT. jack of the machine, you can make the machine receive the fax by pressing [ ] > [Fax Start] or **Start**, and selecting [Receive] or ▼.

If the machine answers a voice call and pseudo/double-rings for you to take over, you can take the call at the external telephone by pressing [Pickup] or **Hook**.

If you answer a call and no one is on the line:

You should assume that you're receiving a manual fax.

Press ***51** and wait for the chirp or until the LCD displays [Receiving], and then hang up.

You can also use the Easy Receive feature to make your machine automatically take the call.

Related Information

- External and Extension Telephones

If You Use a Non-Brother Cordless External Handset

Related Models: MFC-L3710CW/MFC-L3735CDN/MFC-L3745CDW/MFC-L3750CDW/MFC-L3770CDW

If your non-Brother cordless telephone is connected to the telephone line cord and you typically carry the cordless handset elsewhere, it is easier to answer calls during the Ring Delay.

If you let the machine answer first, you must go to the machine so you can press `[Pickup]` or **Hook** to transfer the call to the cordless handset.

Related Information

- External and Extension Telephones

Use the Remote Codes

Related Models: MFC-L3710CW/MFC-L3735CDN/MFC-L3745CDW/MFC-L3750CDW/MFC-L3770CDW

Fax Receive Code

If you answer a fax call on an extension telephone, you can tell your machine to receive it by pressing the Fax Receive Code ***51**. Wait for the chirping sounds, and then replace the handset.

If you answer a fax call at the external telephone, you can make the machine receive it by pressing the buttons in the following table:

Applicable Models	To make the machine receive the fax
MFC-L3710CW/MFC-L3735CDN/MFC-L3745CDW/ MFC-L3750CDW/MFC-L3770CDW	`Fax Start` and then `Receive`

Telephone Answer Code

If you receive a voice call and the machine is in F/T mode, it will start to sound the F/T ring (pseudo/double-ring) after the initial ring delay. If you pick up the call on an extension telephone you can turn the F/T ring off by pressing **#51** (make sure you press this between the rings).

If the machine answers a voice call and pseudo/double-rings for you to take over, you can take the call at the external telephone by pressing the button in the following table:

Applicable Models	To pick up voice call
MFC-L3710CW/MFC-L3735CDN/MFC-L3745CDW/ MFC-L3750CDW/MFC-L3770CDW	`Pickup`

Related Information

- External and Extension Telephones
  - Change the Remote Codes

Change the Remote Codes

Related Models: MFC-L3710CW/MFC-L3735CDN/MFC-L3745CDW/MFC-L3750CDW/MFC-L3770CDW

The preset Fax Receive Code is ***51**. The preset Telephone Answer Code is **#51**. If you are always disconnected when accessing your External TAD remotely, try changing the three-digit remote codes, for example to ### and 999.

1. Press [Settings] > [All Settings] > [Fax] > [Setup Receive] > [Remote Codes].
2. Do one of the following:
   - To change the Fax Receive Code, press [Act.Code]. Enter the new code, and then press [OK].
   - To change the Telephone Answer Code, press [Deact.Code]. Enter the new code, and then press [OK].
   - If you do not want to change the Codes, go to the next step.
   - To turn off (or turn on) the Remote Codes, press [Remote Codes], and then press [Off] (or [On]).
3. Press .

Related Information

- Use the Remote Codes

Multi-line Connections (PBX)

Related Models: MFC-L3710CW/MFC-L3735CDN/MFC-L3745CDW/MFC-L3750CDW/MFC-L3770CDW

We suggest you ask the company that installed your PBX to connect your machine. If you have a multi line system we suggest you ask the installer to connect the unit to the last line on the system. This prevents the machine being activated each time the system receives telephone calls. If all incoming calls will be answered by a switchboard operator we recommend setting the Receive Mode to `[Manual]`.

We cannot guarantee that your machine will operate correctly under all circumstances when connected to a PBX. Any difficulties with sending or receiving faxes should be reported first to the company that handles your PBX.

Related Information

- Telephone Services and External Devices

Fax Reports

- Print a Transmission Verification Report
- Print a Fax Journal

Print a Transmission Verification Report

Related Models: MFC-L3710CW/MFC-L3735CDN/MFC-L3745CDW/MFC-L3750CDW/MFC-L3770CDW

You can use the Transmission Verification Report as proof that you sent a fax. This report lists the receiving party's name or fax number, the time and date of transmission, duration of transmission, number of pages sent, and whether or not the transmission was successful.

There are several settings available for the Transmission Verification Report:

On	Prints a report after every fax you send.
On (+Image)	Prints a report after every fax you send. A portion of the fax's first page appears on the report.
Error only	Prints a report if your fax is unsuccessful due to a transmission error.
Error only (+Image)	Prints a report if your fax is unsuccessful due to a transmission error. A portion of the fax's first page appears on the report.
Off	Your Brother machine does not print any reports after sending faxes.

1. Press [Settings] > [All Settings] > [Fax] > [Report Setting] > [XMIT Report].
2. Press the option you want.

   If you select [On (+Image)] or [Error only (+Image)], the image will not appear on the Transmission Verification Report if Real Time Transmission is set to [On].
3. Press .

   If the transmission is successful, OK appears next to RESULT on the Transmission Verification Report. If the transmission is not successful, NG appears next to RESULT.

Related Information

- Fax Reports

Print a Fax Journal

Related Models: MFC-L3710CW/MFC-L3735CDN/MFC-L3745CDW/MFC-L3750CDW/MFC-L3770CDW

You can set the machine to print a Fax Journal at specific intervals (every 50 faxes, 6, 12 or 24 hours, 2 or 7 days).

1. Press [Settings] > [All Settings] > [Fax] > [Report Setting] > [Journal Period] > [Journal Period].
2. Swipe up or down or press ▲ or ▼ to select an interval, and then press it.
   - Every 6, 12, 24 hours, 2 or 7 days

     The machine will print the report at the selected time and then erase all reception and transmission log data from its memory. If the machine's memory becomes full with 200 log data before the time you selected has passed, the machine will print the Journal early and then erase all jobs from the memory. If you want an extra report before it is due to print, you can print it without erasing the log data from the memory.
   - Every 50 Faxes

     The machine will print the Journal when the machine has stored 50 reception and transmission log data.
3. If you selected every 6, 12, 24 hours, 2 or 7 days, press [Time] and enter the time to start printing (in 24-hour format) using the LCD, and then press [OK]. (For example: enter 19:45 for 7:45 PM.)
4. If you selected [Every 7 Days], press [Day].
5. Swipe up or down or press ▲ or ▼ to display the [Every Monday], [Every Tuesday], [Every Wednesday], [Every Thursday], [Every Friday], [Every Saturday] or [Every Sunday] option, and then press the first day of the 7-day countdown.
6. Press .

Related Information

- Fax Reports

PC-FAX

Related Models: MFC-L3710CW/MFC-L3735CDN/MFC-L3745CDW/MFC-L3750CDW/MFC-L3770CDW

- PC-FAX for Windows
- PC-FAX for Mac

PC-FAX for Windows

- PC-FAX Overview (Windows)
- Send a Fax Using PC-FAX (Windows)
- Receive Faxes on Your Computer (Windows)

PC-FAX Overview (Windows)

Related Models: MFC-L3710CW/MFC-L3735CDN/MFC-L3745CDW/MFC-L3750CDW/MFC-L3770CDW

Reduce paper consumption and save time by using Brother's PC-FAX software to send faxes directly from your machine.

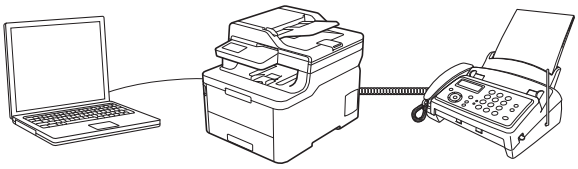

- Configure PC-FAX (Windows)
- Configure your PC-Fax Address Book (Windows)

Configure PC-FAX (Windows)

Related Models: MFC-L3710CW/MFC-L3735CDN/MFC-L3745CDW/MFC-L3750CDW/MFC-L3770CDW

Before sending faxes using PC-FAX, personalise the send options in each tab of the **PC-FAX Setup** dialog box.

1. Do one of the following:
   - Windows 7

     Click **(Start)** > **All Programs** > **Brother** > **Brother Utilities**.

     Click the drop-down list and select your model name (if not already selected). Click **PC-FAX** in the left navigation bar, and then click **Setup Sending**.
   - Windows 8 and Windows 10

     Launch (**Brother Utilities**), and then click the drop-down list and select your model name (if not already selected). Click **PC-FAX** in the left navigation bar, and then click **Setup Sending**.

   The **PC-FAX Setup** dialog box appears.

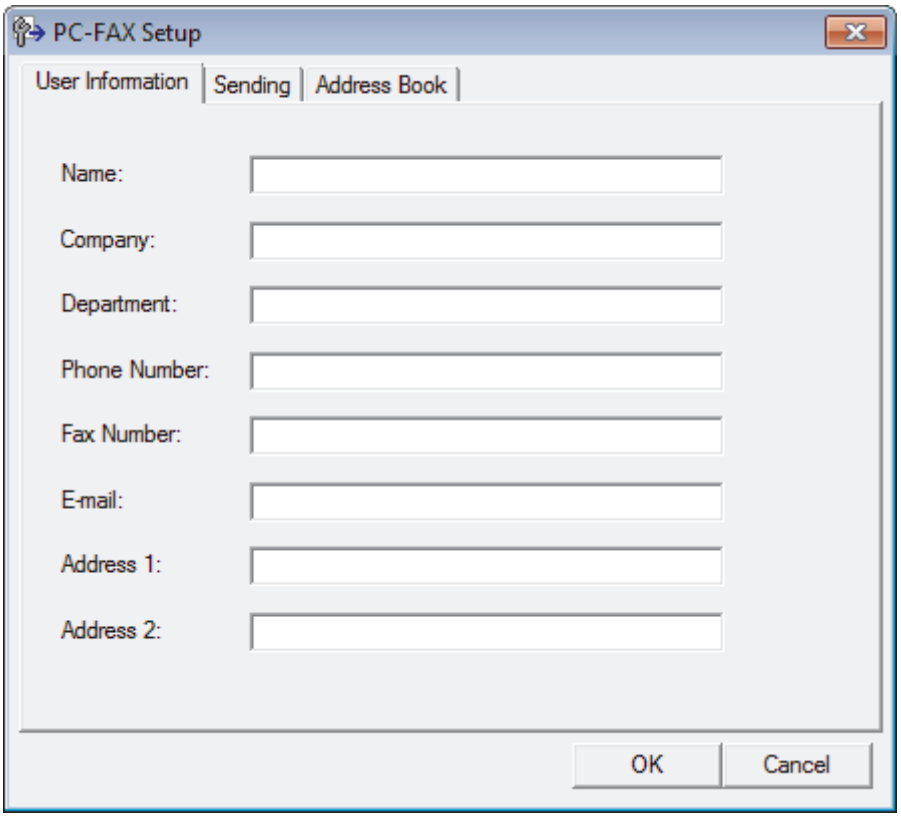

2. Do one of the following:
   - Click the **User Information** tab, and then type your user information in the fields.

   Each Microsoft account can have its own customised **User Information** screen for custom fax headers and cover pages.

   - Click the **Sending** tab, and then type the number needed to access an outside line (if needed) in the **Outside line access** field. Select the **Include header** check box to include the header information.
   - Click the **Address Book** tab, and then select the address book you want to use for PC-FAX from the **Select Address Book** drop-down list.
3. Click **OK**.

Related Information

- PC-FAX Overview (Windows)

Configure your PC-Fax Address Book (Windows)

Related Models: MFC-L3710CW/MFC-L3735CDN/MFC-L3745CDW/MFC-L3750CDW/MFC-L3770CDW

Add, edit and delete members and groups to personalise your Brother **Address Book**.

- Add a Member to your PC-FAX Address Book (Windows)
- Create a Group in your PC-FAX Address Book (Windows)
- Edit Member or Group Information in your PC-FAX Address Book (Windows)
- Delete a Member or Group in your PC-FAX Address Book (Windows)
- Export your PC-FAX Address Book (Windows)
- Import Information to your PC-FAX Address Book (Windows)

Add a Member to your PC-FAX Address Book (Windows)

Related Models: MFC-L3710CW/MFC-L3735CDN/MFC-L3745CDW/MFC-L3750CDW/MFC-L3770CDW

Add new people and their fax information to the PC-Fax Address Book if you want to send a fax using Brother PC-Fax software.

1. Do one of the following:
   - Windows 7

     Click **(Start)** > **All Programs** > **Brother** > **Brother Utilities**.

     Click the drop-down list and select your model name (if not already selected). Click **PC-FAX** in the left navigation bar, and then click **Address Book (Send)**.
   - Windows 8 and Windows 10

     Launch (**Brother Utilities**), and then click the drop-down list and select your model name (if not already selected). Click **PC-FAX** in the left navigation bar, and then click **Address Book (Send)**.

   The **Address Book** dialog box appears.

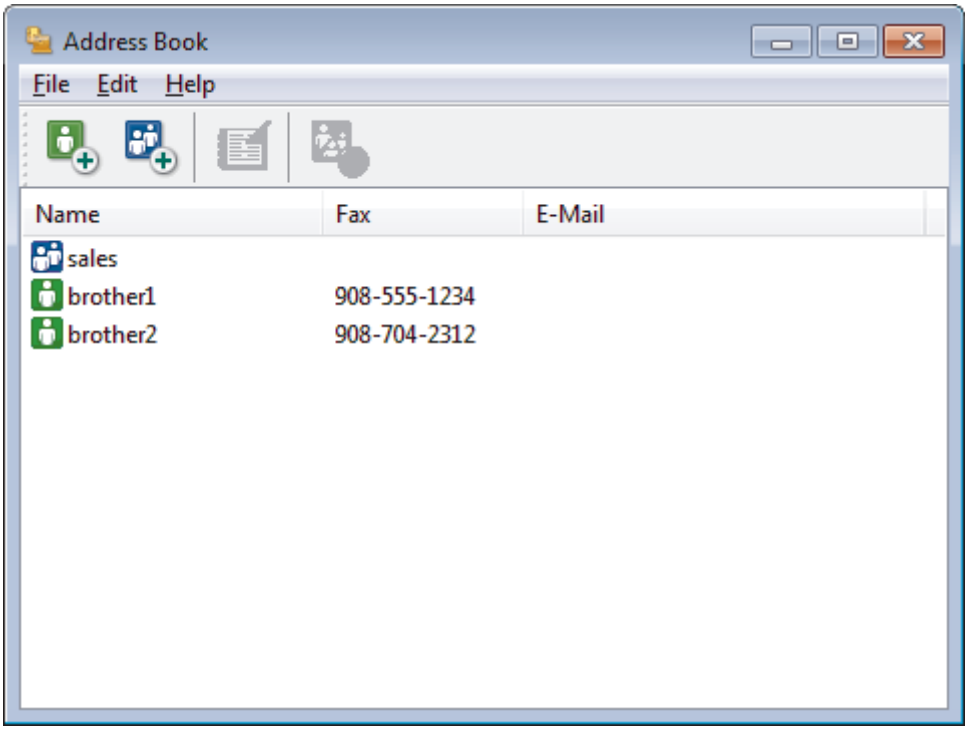

2. Click .

   The **Address Book Member Setup** dialog box appears.
3. Type the member's information in the corresponding fields. Only the **Name** field is required.
4. Click **OK**.

Related Information

- Configure your PC-Fax Address Book (Windows)

Create a Group in your PC-FAX Address Book (Windows)

Related Models: MFC-L3710CW/MFC-L3735CDN/MFC-L3745CDW/MFC-L3750CDW/MFC-L3770CDW

Create a group to broadcast the same PC-FAX to several recipients at one time.

1. Do one of the following:
   - Windows 7

     Click **(Start)** > **All Programs** > **Brother** > **Brother Utilities**.

     Click the drop-down list and select your model name (if not already selected). Click **PC-FAX** in the left navigation bar, and then click **Address Book (Send)**.
   - Windows 8 and Windows 10

     Launch (**Brother Utilities**), and then click the drop-down list and select your model name (if not already selected). Click **PC-FAX** in the left navigation bar, and then click **Address Book (Send)**.

   The **Address Book** dialog box appears.

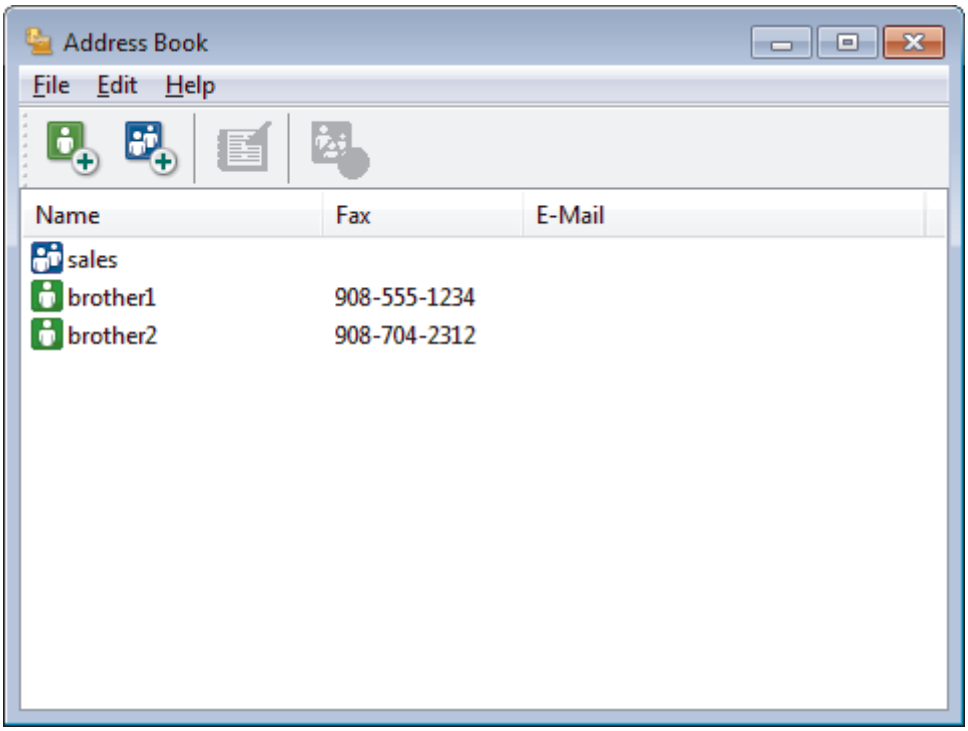

2. Click .

   The **Address Book Group Setup** dialog box appears.
3. Type the name of the new group in the **Group Name** field.
4. In the **Available Names** field, select each name you want to include in the group, and then click **Add >>**.

   Members added to the group appear in the **Group Members** box.
5. When finished, click **OK**.

Each group can contain up to 50 members.

Related Information

- Configure your PC-Fax Address Book (Windows)

Edit Member or Group Information in your PC-FAX Address Book (Windows)

Related Models: MFC-L3710CW/MFC-L3735CDN/MFC-L3745CDW/MFC-L3750CDW/MFC-L3770CDW

1. Do one of the following:
   - Windows 7

     Click **(Start)** > **All Programs** > **Brother** > **Brother Utilities**.

     Click the drop-down list and select your model name (if not already selected). Click **PC-FAX** in the left navigation bar, and then click **Address Book (Send)**.
   - Windows 8 and Windows 10

     Launch (**Brother Utilities**), and then click the drop-down list and select your model name (if not already selected). Click **PC-FAX** in the left navigation bar, and then click **Address Book (Send)**.

   The **Address Book** dialog box appears.

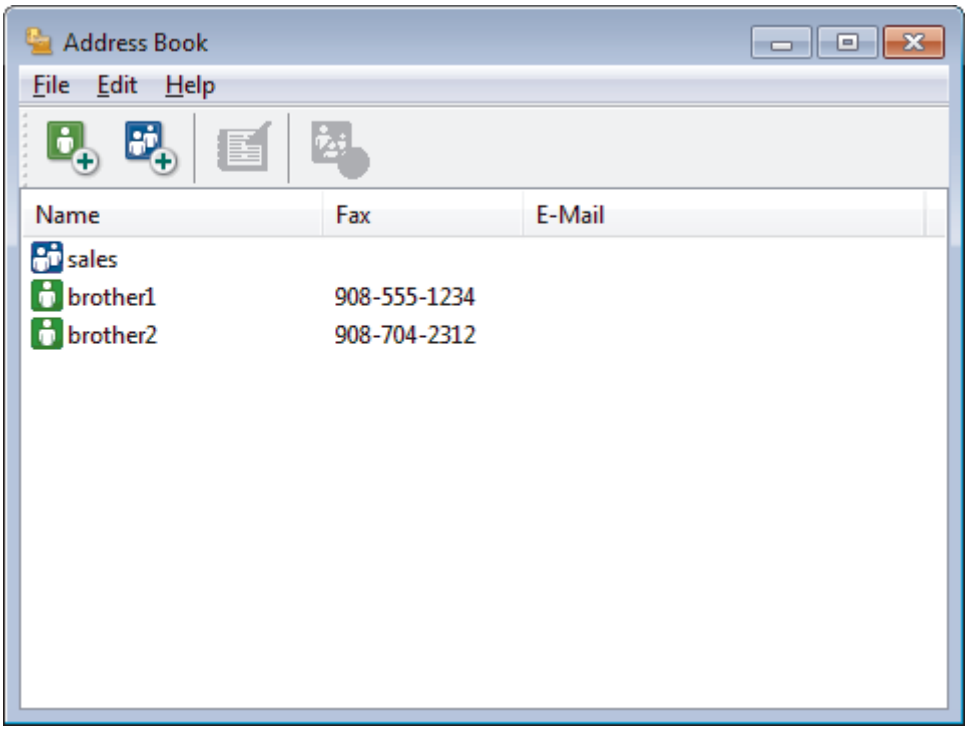

2. Select the member or group you want to edit.
3. Click (**Properties**).
4. Change the member or group information.
5. Click **OK**.

Related Information

- Configure your PC-Fax Address Book (Windows)

Delete a Member or Group in your PC-FAX Address Book (Windows)

Related Models: MFC-L3710CW/MFC-L3735CDN/MFC-L3745CDW/MFC-L3750CDW/MFC-L3770CDW

1. Do one of the following:
   - Windows 7

     Click **(Start)** > **All Programs** > **Brother** > **Brother Utilities**.

     Click the drop-down list and select your model name (if not already selected). Click **PC-FAX** in the left navigation bar, and then click **Address Book (Send)**.
   - Windows 8 and Windows 10

     Launch (**Brother Utilities**), and then click the drop-down list and select your model name (if not already selected). Click **PC-FAX** in the left navigation bar, and then click **Address Book (Send)**.

   The **Address Book** dialog box appears.

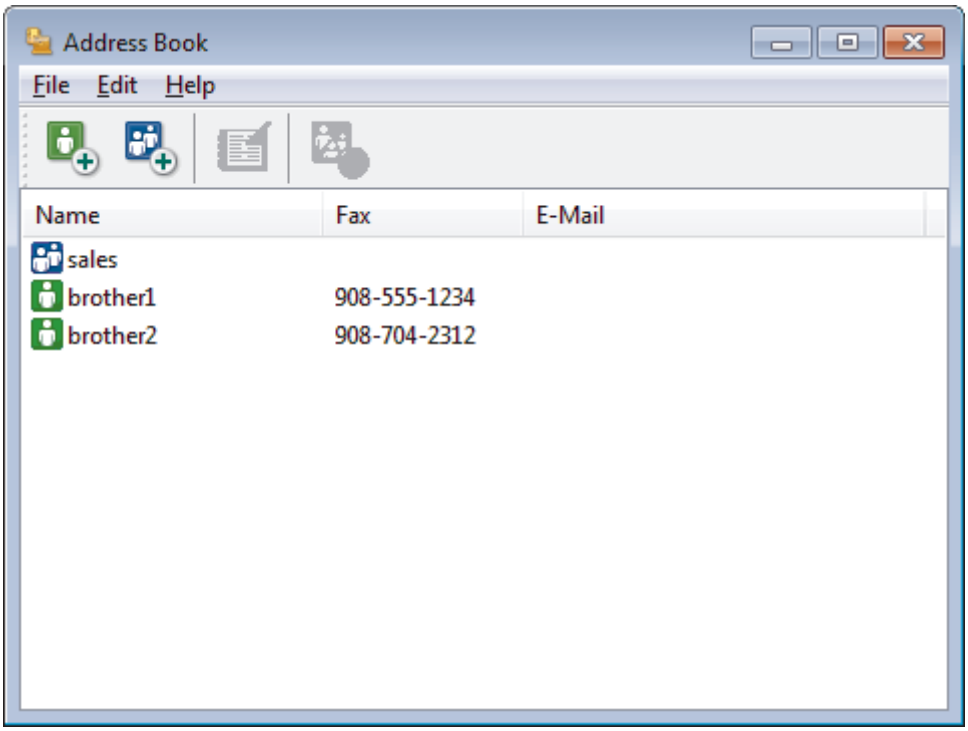

2. Select the member or group you want to delete.
3. Click (**Delete**).
4. When the confirmation dialog box appears, click **OK**.

Related Information

- Configure your PC-Fax Address Book (Windows)

Export your PC-FAX Address Book (Windows)

Related Models: MFC-L3710CW/MFC-L3735CDN/MFC-L3745CDW/MFC-L3750CDW/MFC-L3770CDW

You can export the Address Book as an ASCII text file (*.csv), a vCard (an electronic business card), or **Remote Setup Dial Data** and save it on your computer.

- You cannot export the group settings when you export the **Address Book** data.

1. Do one of the following:
   - Windows 7

     Click **(Start)** > **All Programs** > **Brother** > **Brother Utilities**.

     Click the drop-down list and select your model name (if not already selected). Click **PC-FAX** in the left navigation bar, and then click **Address Book (Send)**.
   - Windows 8 and Windows 10

     Launch (**Brother Utilities**), and then click the drop-down list and select your model name (if not already selected). Click **PC-FAX** in the left navigation bar, and then click **Address Book (Send)**.

   The **Address Book** dialog box appears.

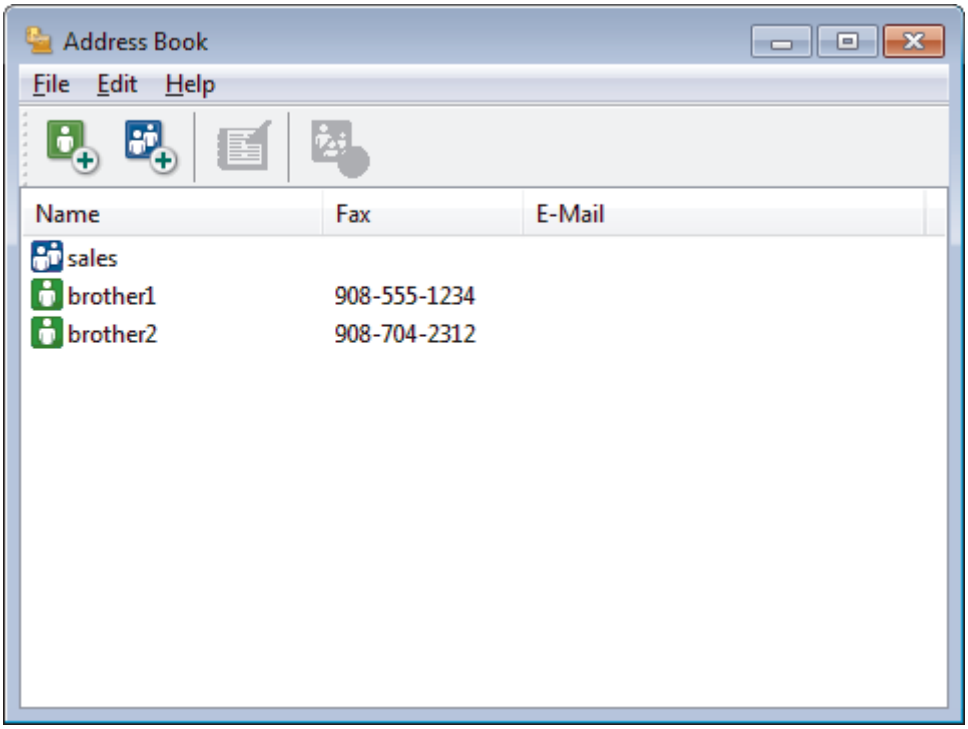

2. Click the **File** menu, and then select **Export**.
3. Select one of the following:
   - **Text**

     The **Select Items** dialog box appears. Go to step 4.
   - **vCard**

     You must select the member you want to export from your address book before selecting this option.

     Browse to the folder where you want to save the vCard, type the vCard name in the **File name** field, and then click **Save**.
   - **Remote Setup Dial Data**

     Browse to the folder where you want to save the data, type the file name in the **File name** field, and then click **Save**.

4. In the **Available Items** field, select the data you want to export, and then click **Add >>**.

Select and add the items in the order you want them listed.

5. If you are exporting to an ASCII file, under the **Divide Character** section, select the **Tab** or **Comma** option to separate the data fields.
6. Click **OK**.
7. Browse to the folder on your computer where you want to save the data, type the file name, and then click **Save**.

Related Information

- Configure your PC-Fax Address Book (Windows)

Import Information to your PC-FAX Address Book (Windows)

Related Models: MFC-L3710CW/MFC-L3735CDN/MFC-L3745CDW/MFC-L3750CDW/MFC-L3770CDW

You can import ASCII text files (*.csv), vCards (electronic business cards), or **Remote Setup Dial Data** into your Address Book.

1. Do one of the following:
   - Windows 7

     Click **(Start)** > **All Programs** > **Brother** > **Brother Utilities**.

     Click the drop-down list and select your model name (if not already selected). Click **PC-FAX** in the left navigation bar, and then click **Address Book (Send)**.
   - Windows 8 and Windows 10

     Launch (**Brother Utilities**), and then click the drop-down list and select your model name (if not already selected). Click **PC-FAX** in the left navigation bar, and then click **Address Book (Send)**.

   The **Address Book** dialog box appears.

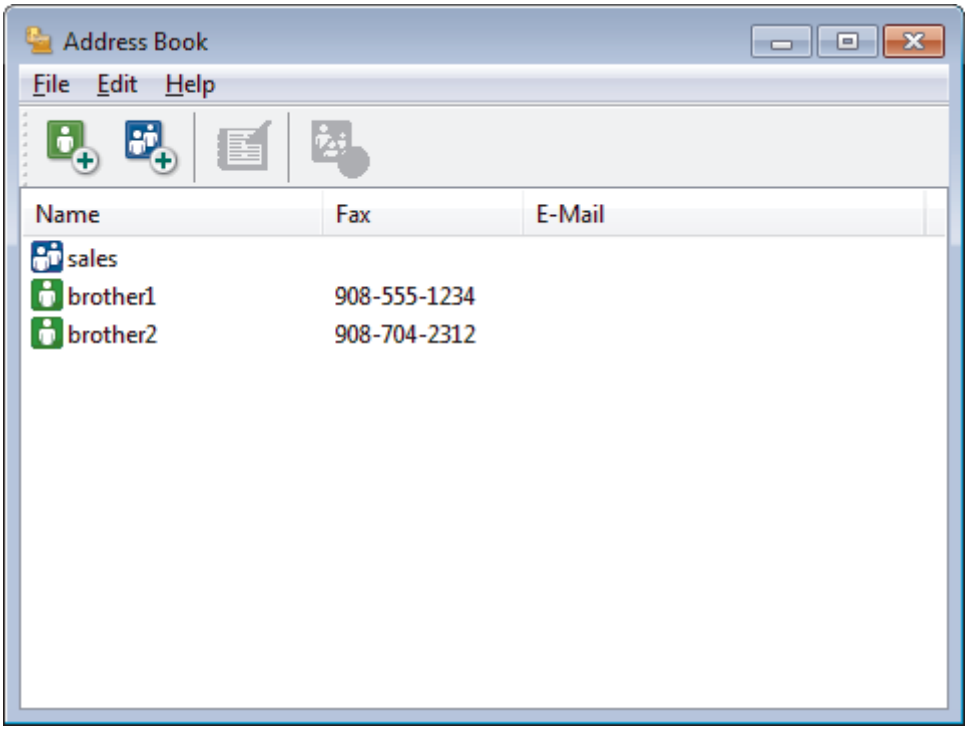

2. Click the **File** menu, and then select **Import**.
3. Select one of the following:
   - **Text**

     The **Select Items** dialog box appears. Go to step 4.
   - **vCard**

     Go to step 7.
   - **Remote Setup Dial Data**

     Go to step 7.
4. In the **Available Items** field, select the data you want to import, and then click **Add >>**.

You must select and add fields from the **Available Items** list in the same order they are listed in the import text file.

5. If you are importing an ASCII file, under the **Divide Character** section, select the **Tab** or **Comma** option to separate the data fields.
6. Click **OK**.
7. Browse to the folder where you want to import the data, type the file name, and then click **Open**.

Related Information

- Configure your PC-Fax Address Book (Windows)

Send a Fax Using PC-FAX (Windows)

Related Models: MFC-L3710CW/MFC-L3735CDN/MFC-L3745CDW/MFC-L3750CDW/MFC-L3770CDW

PC-FAX supports only monochrome faxes. A monochrome fax will be sent even if the original data is colour and the receiving fax machine supports colour faxes.

1. Create a file in any application on your computer.
2. Select the print command in your application.
3. Select **Brother PC-FAX** as your printer, and then complete your print operation.

   The **Brother PC-FAX** dialog box appears.

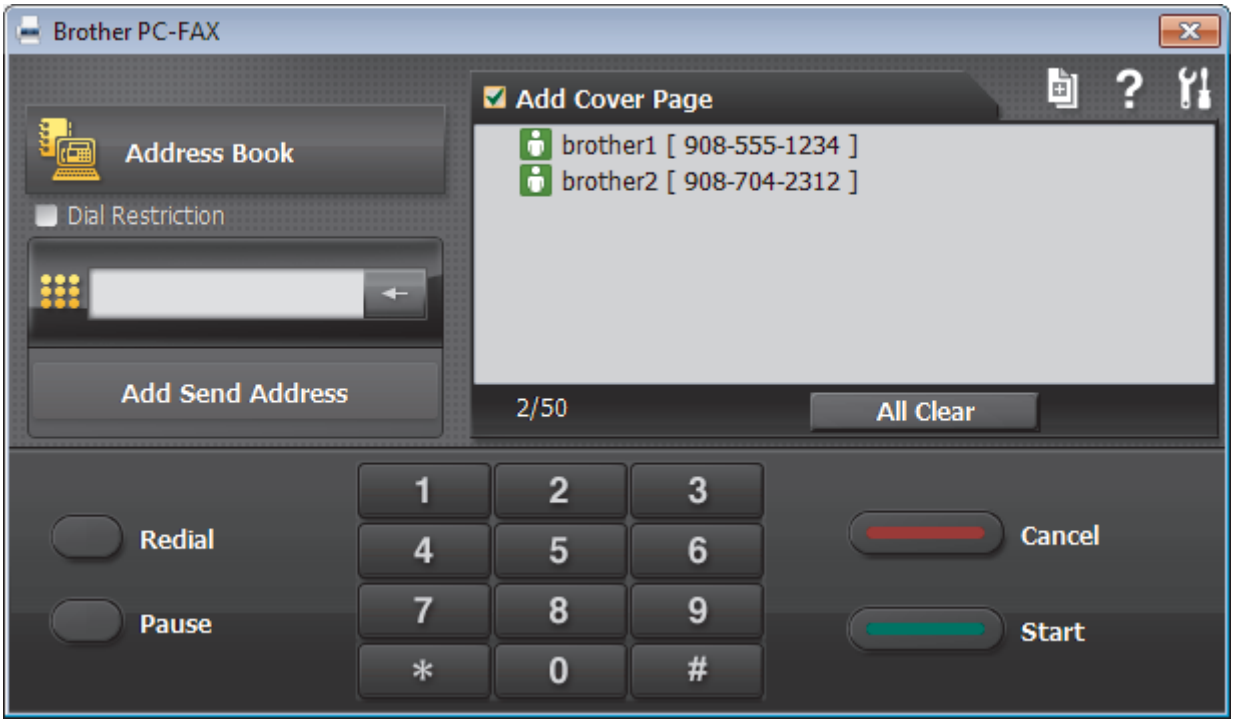

4. Type a fax number using one of the following methods:
   - Click the numbers on the dial pad to type the number, and then click **Add Send Address**.

   If you select the **Dial Restriction** check box, a confirmation dialog box will appear for you to re-type the fax number using the keyboard. This feature helps to prevent transmissions to the wrong destination.

   - Click the **Address Book** button, and then select a member or group from the Address Book.

   If you make a mistake, click **All Clear** to delete all entries.

5. To include a cover page, select the **Add Cover Page** check box. You can also click to create or edit a cover page.
6. Click **Start** to send the fax.

   - To cancel the fax, click **Cancel**.
   - To redial a number, click **Redial** to show the last five fax numbers, select a number, and then click **Start**.

Related Information

- PC-FAX for Windows

Receive Faxes on Your Computer (Windows)

Related Models: MFC-L3710CW/MFC-L3735CDN/MFC-L3745CDW/MFC-L3750CDW/MFC-L3770CDW

Use Brother's PC-FAX software to receive faxes on your computer, screen them and print only those faxes you want.

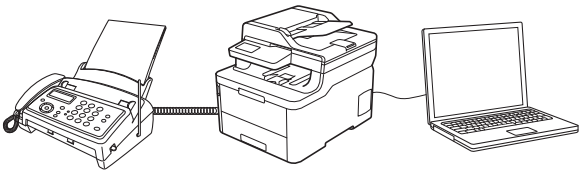

- Receive Faxes Using PC-FAX Receive (Windows)

Receive Faxes Using PC-FAX Receive (Windows)

Related Models: MFC-L3710CW/MFC-L3735CDN/MFC-L3745CDW/MFC-L3750CDW/MFC-L3770CDW

Brother's PC-FAX Receive software lets you view and store faxes on your computer. It is automatically installed when you install the Brother software and drivers and works on locally or network-connected machines.

- PC-FAX Receive supports only monochrome faxes.

When you turn off your computer, your machine will continue to receive and store faxes in your Brother machine's memory. The machine's LCD will display the number of stored faxes received. When you start this application, the software will transfer all received faxes to your computer at once. You can enable the Backup Print option if you want the machine to print a copy of the fax before the fax is sent to your computer, or before the computer is switched off. You can configure the Backup Print settings from your Brother machine.

Related Information

- Receive Faxes on Your Computer (Windows)
  - Run Brother's PC-FAX Receive on Your Computer (Windows)
  - View Received PC-FAX Messages (Windows)

Run Brother's PC-FAX Receive on Your Computer (Windows)

Related Models: MFC-L3710CW/MFC-L3735CDN/MFC-L3745CDW/MFC-L3750CDW/MFC-L3770CDW

We recommend selecting the **Start PC-FAX Receive on computer startup** check box so that the software runs automatically and can transfer any faxes upon computer startup.

1. Do one of the following:
   - Windows 7

     Click **(Start)** > **All Programs** > **Brother** > **Brother Utilities**.

     Click the drop-down list and select your model name (if not already selected). Click **PC-FAX** in the left navigation bar, and then click **Receive**.
   - Windows 8 and Windows 10

     Launch (**Brother Utilities**), and then click the drop-down list and select your model name (if not already selected). Click **PC-FAX** in the left navigation bar, and then click **Receive**.
2. Confirm the message and click **Yes**.

   The **PC-FAX Receive** window appears. The (**PC-FAX Receive**) icon also appears in your computer task tray.

Related Information

- Receive Faxes Using PC-FAX Receive (Windows)
  - Set Up Your Computer for PC-FAX Receiving (Windows)
  - Add Your Brother Machine to PC-FAX Receiving (Windows)

Set Up Your Computer for PC-FAX Receiving (Windows)

Related Models: MFC-L3710CW/MFC-L3735CDN/MFC-L3745CDW/MFC-L3750CDW/MFC-L3770CDW

1. Double-click the (**PC-FAX Receive**) icon in your computer task tray.

   The **PC-FAX Receive** window appears.
2. Click **Settings**.
3. Configure these options as needed:

   Preferences

   Configure to start PC-FAX Receive automatically when you start Windows.

   Save

   Configure the path to save PC-FAX files and select the received document format.

   Upload to

   Configure the path to the SharePoint server and select the option to upload automatically or manually (available only for Administrators).

   Device

   Select the Brother machine that you want to receive PC-FAX.

   Lock (available only for Administrators)

   Restrict users who do not have administrator privileges from configuring the settings options shown above.

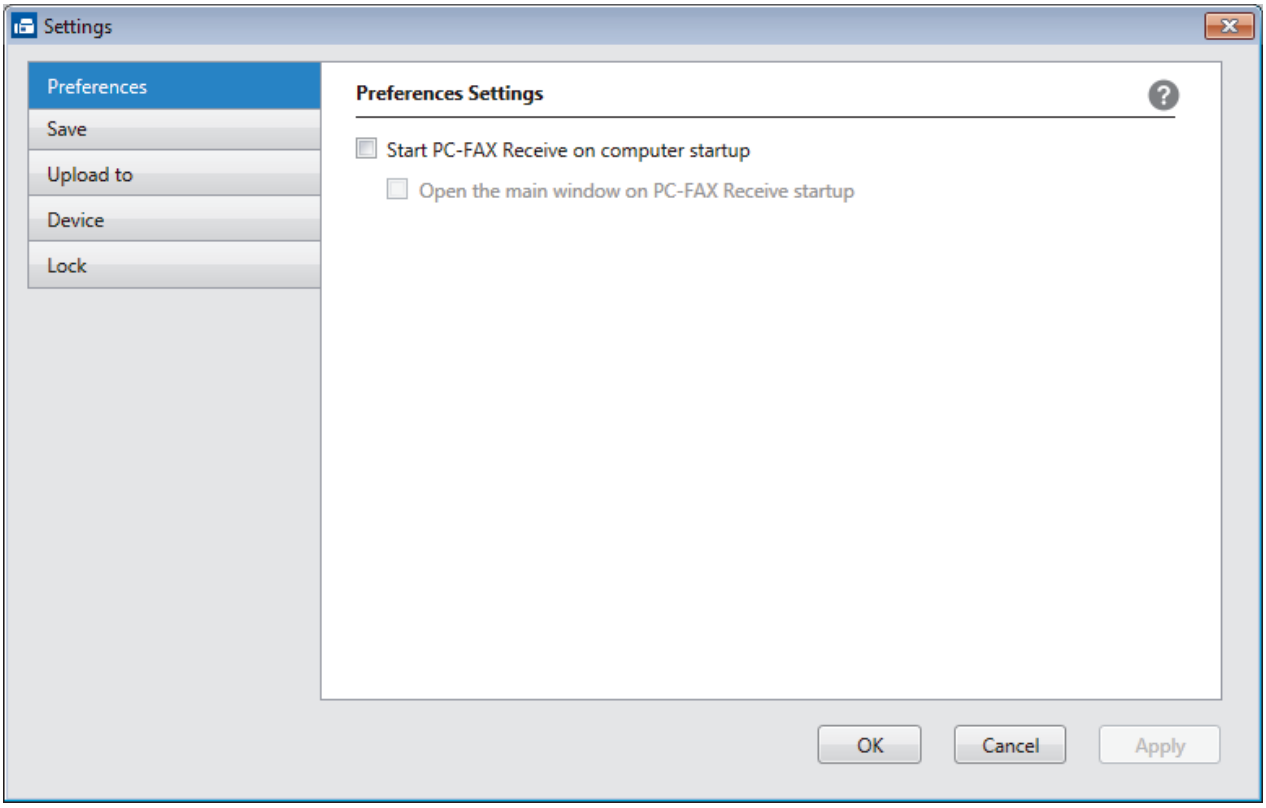

4. Click **OK**.

Related Information

- Run Brother's PC-FAX Receive on Your Computer (Windows)

Add Your Brother Machine to PC-FAX Receiving (Windows)

Related Models: MFC-L3710CW/MFC-L3735CDN/MFC-L3745CDW/MFC-L3750CDW/MFC-L3770CDW

- If you installed the machine following the instructions for a network user, then the machine should already be configured for your network.

1. Double-click the (**PC-FAX Receive**) icon in your computer task tray.

   The **PC-FAX Receive** window appears.
2. Click **Settings**.
3. Click **Device** > **Add**.

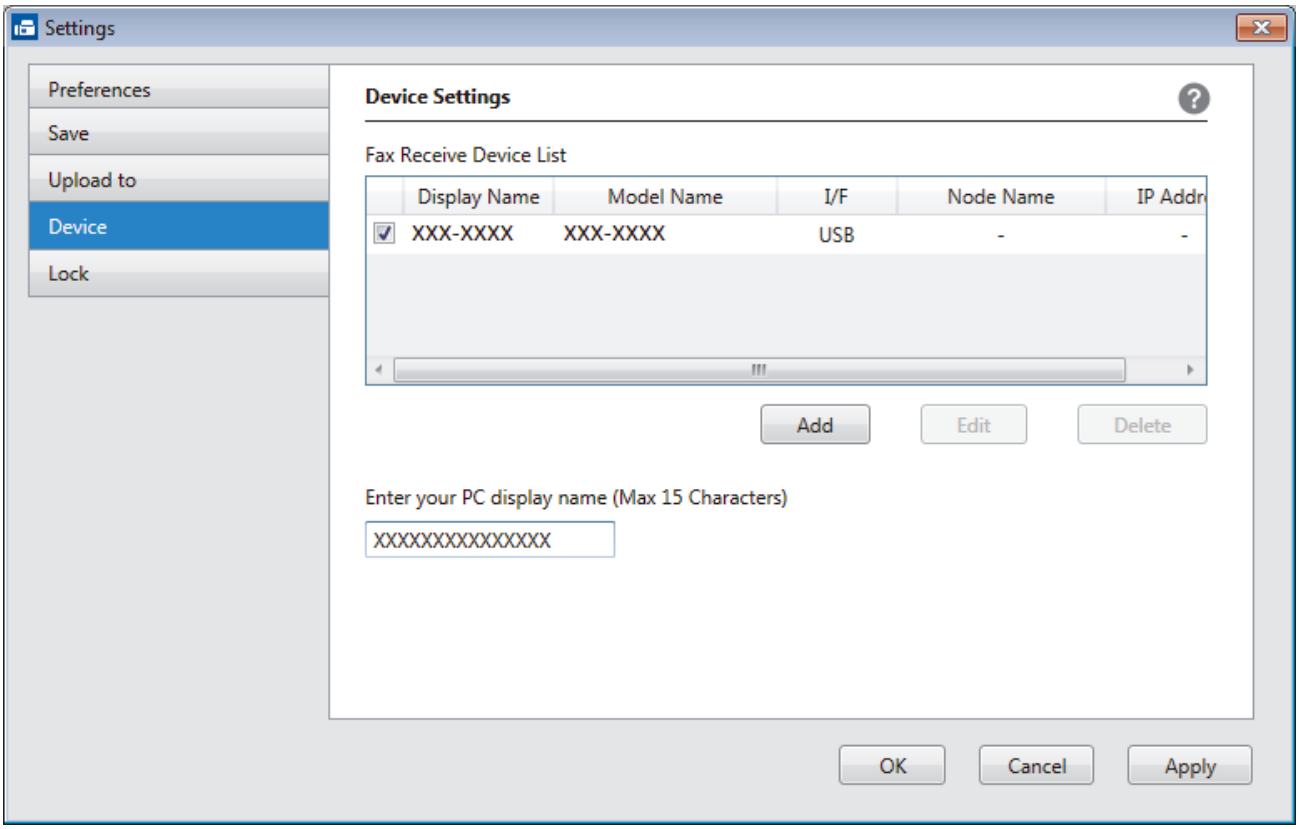

4. Select the appropriate connection method.

   Select your machine from the automatic search results below.

   Connected Brother machines will be displayed. Select a device from the list. Click **OK**.

   Specify your machine by IP address

   Type the machine's IP address in the **IP Address** field, and then click **OK**.
5. To change the computer name that will appear on the machine's LCD, type the new name in the **Enter your PC display name (Max 15 Characters)** field.
6. Click **OK**.

Related Information

- Run Brother's PC-FAX Receive on Your Computer (Windows)

View Received PC-FAX Messages (Windows)

Related Models: MFC-L3710CW/MFC-L3735CDN/MFC-L3745CDW/MFC-L3750CDW/MFC-L3770CDW

Receiving Status

Icon	Indicated Status
	Standby mode No unread messages
	Receiving messages
	Messages received Unread messages

1. Double-click the (**PC-FAX Receive**) icon in your computer task tray.

   The **PC-FAX Receive** window appears.

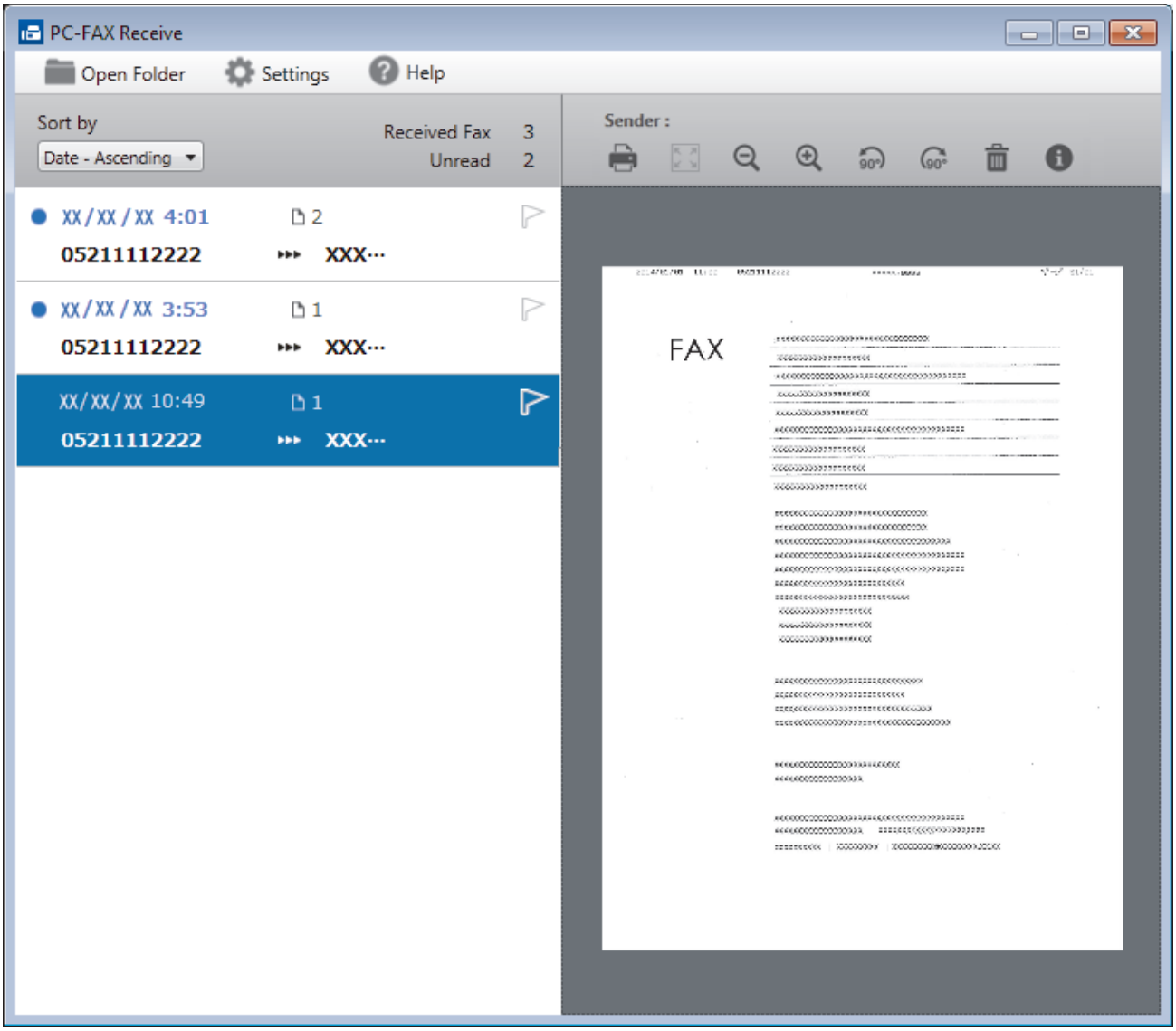

2. Click any faxes in the list to view them.
3. When finished, click in the right top corner of the window to close it.

Even after closing the window, PC-FAX Receive is active and the (**PC-FAX Receive**) icon will remain in your computer task tray. To close PC-FAX Receive, click the icon in the computer task tray and click **Close**.

Related Information

- Receive Faxes Using PC-FAX Receive (Windows)

PC-FAX for Mac

Use Brother's PC-FAX software to send faxes directly from your Mac without printing them. This feature helps reduce your paper consumption and save time.

- Send Faxes from Your Application (Mac)

Send Faxes from Your Application (Mac)

Related Models: MFC-L3710CW/MFC-L3735CDN/MFC-L3745CDW/MFC-L3750CDW/MFC-L3770CDW

PC-FAX supports only monochrome faxes. A monochrome fax will be sent even if the original data is colour and the receiving fax machine supports colour faxes.

1. Create a document in a Mac application.
2. From an application, such as Apple TextEdit, click the **File** menu, and then select **Print**.
3. Click the application pop-up menu, and then select the **Send Fax** option.

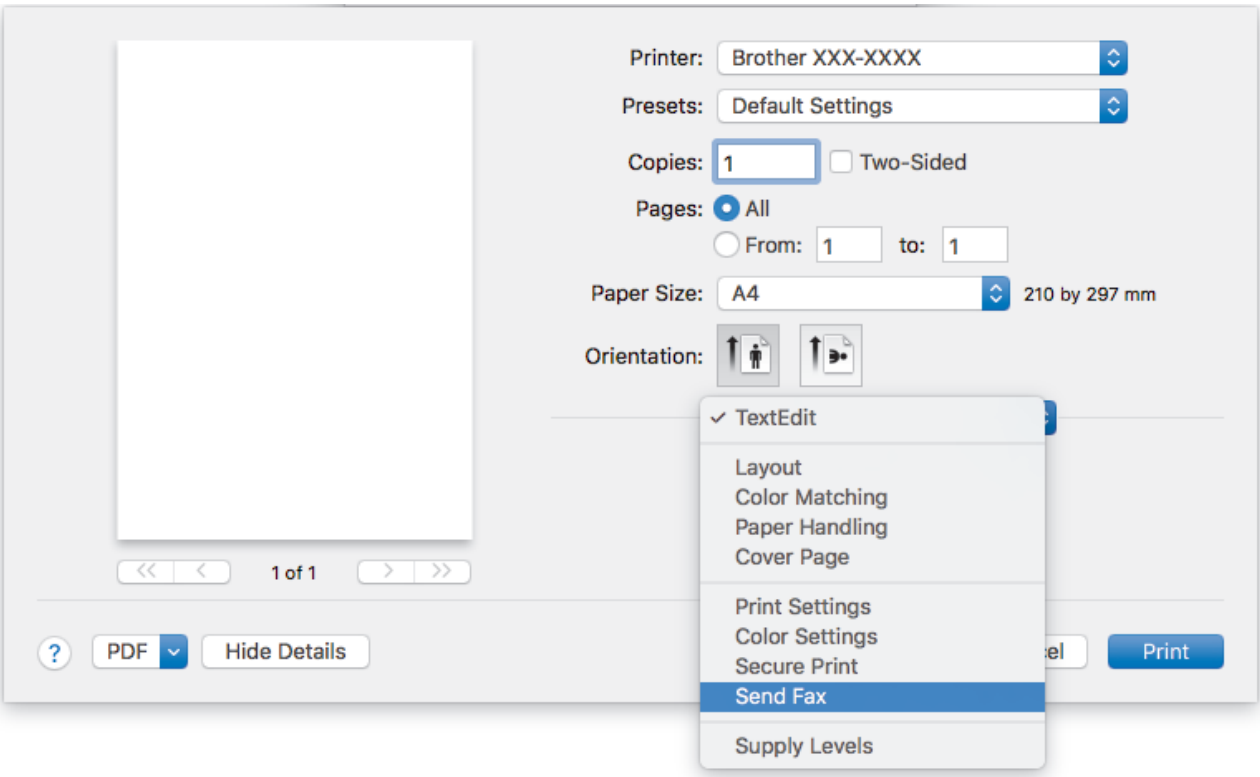

4. Click the **Output** pop-up menu, and then select the **Facsimile** option.

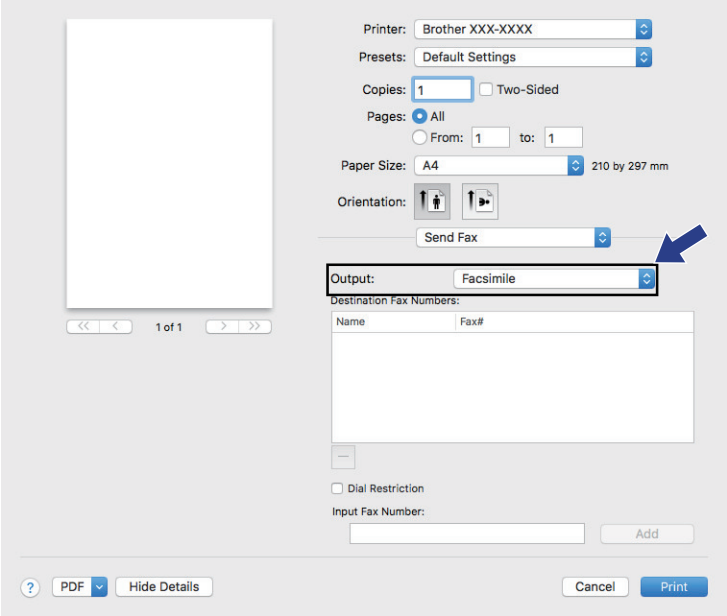

5. Type a fax number in the **Input Fax Number** field, and then click **Add**.
   The fax number is displayed in the **Destination Fax Numbers** field.

To send a fax to more than one number, click the **Add** button after entering the first fax number and type the next fax number. The destination fax numbers will be listed in the **Destination Fax Numbers** field.

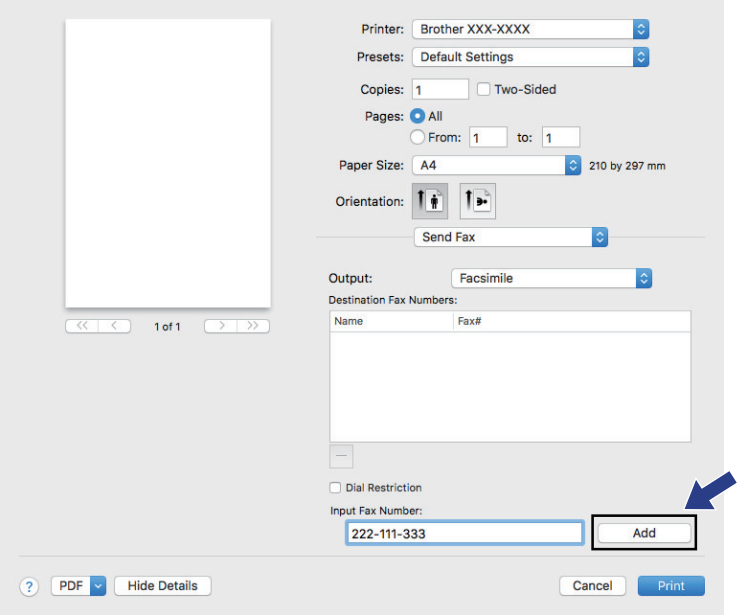

6. Click **Print** to send the fax.

Related Information

- PC-FAX for Mac

Print Data Directly from a USB Flash Drive

You can print photos directly from digital camera media or a USB flash drive.
Supported file types are PDF, JPEG, TIFF, XPS, and PRN.

- Compatible USB Flash Drives
- Print Data Directly from a USB Flash Drive or Digital Camera Supporting Mass Storage
- Create a PRN File for Direct Printing (Windows)

Compatible USB Flash Drives

Related Models: MFC-L3745CDW/MFC-L3750CDW/MFC-L3770CDW

IMPORTANT

The USB direct interface supports only USB flash drives and digital cameras that use the USB mass storage standard. Other USB devices are not supported.

Compatible USB Flash Drives	
USB Class	USB Mass Storage Class
USB Mass Storage Sub Class	SCSI or SFF-8070i
Transfer protocol	Bulk transfer Only
Format [1]	FAT12/FAT16/FAT32/exFAT
Sector size	Max. 4096 Byte
Encryption	Encrypted devices are not supported.

Related Information

- Print Data Directly from a USB Flash Drive

[1] NTFS format is not supported.

Print Data Directly from a USB Flash Drive or Digital Camera Supporting Mass Storage

Related Models: MFC-L3745CDW/MFC-L3750CDW/MFC-L3770CDW

- Make sure your digital camera is turned on.
- Your digital camera must be switched from PictBridge mode to mass storage mode.

IMPORTANT

To prevent damage to your machine, DO NOT connect any device other than a digital camera or USB flash drive to the USB direct interface.

USB port location (Front View)

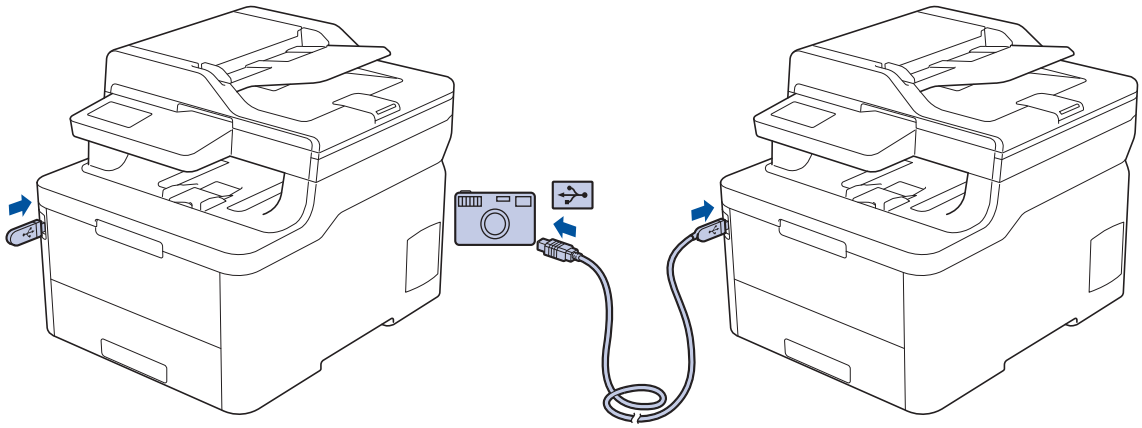

1. Connect your USB flash drive or digital camera to the USB direct interface. The touchscreen will automatically display the USB menu to confirm the USB flash drive or digital camera is correctly connected.

- If an error occurs, the USB menu will not appear on the touchscreen.
- When the machine is in Deep Sleep mode, the touchscreen does not display any information even if you connect a USB flash drive to the USB direct interface. Press the touchscreen to wake up the machine.
- If your machine has been set to Secure Function Lock On, you may not be able to access Direct Print.

2. Press [Direct Print].
3. Swipe up or down, or press ▲ or ▼ to display the file you want to print, and then select the file.

To print an index of the files, press [Index Print] on the touchscreen. Press [Mono Start] or [Colour Start] to print the data.

4. Do one of the following:
   - To change the settings, press [Print Settings]. Go to the next step.
   - If you want to use the default settings, enter the number of copies, and then press [Mono Start] or [Colour Start].
5. Select the print settings you want to change:
   - [Paper Type]
   - [Paper Size]
   - [Multiple Page]

- [Orientation]
- [2-sided]
- [Collate]
- [Tray Use]
- [Print Quality]
- [PDF Option]

Depending on the file type, some of these settings may not appear.

6. Press [OK].
7. Enter the number of copies you want.
8. Press [Mono Start] or [Colour Start] to print the data.
9. Press .

IMPORTANT

DO NOT remove the USB flash drive or digital camera from the USB direct interface until the machine has finished printing.

Related Information

- Print Data Directly from a USB Flash Drive

Create a PRN File for Direct Printing (Windows)

Related Models: MFC-L3745CDW/MFC-L3750CDW/MFC-L3770CDW

These instructions may vary depending on your print application and operating system.

1. Select the print command in your application.
2. Select your model, and then select the print to file option.
3. Complete your print operation.
4. Enter the required information to save the file.

If the computer prompts you to enter a file name only, you can also specify the folder where you want to save the file by typing the directory name (for example: C:\Temp\FileName.prn).

If a USB flash drive is connected to your computer, you can save the file directly to the USB flash drive.

Related Information

- Print Data Directly from a USB Flash Drive

Network

- Configure Network Details Using the Control Panel
- Supported Basic Network Features
- Network Management Software and Utilities
- Additional Methods of Configuring Your Brother Machine for a Wireless Network
- Advanced Network Features
- Technical Information for Advanced Users

Configure Network Details Using the Control Panel

To configure the machine for your network, use the control panel's [Network] menu selections.

- For information about the network settings you can configure using the control panel, see *Related Information*: *Settings Tables*.
- You can also use management utilities, such as BRAdmin Light (Windows), BRAdmin Professional (Windows), Web Based Management and Remote Setup, to configure and change your Brother machine's network settings.

  Remote Setup is not available for DCP models.

  See *Related Information*: *Learn about Network Management Software and Utilities*.

>> DCP-L3510CDW/DCP-L3551CDW
>> MFC-L3710CW/MFC-L3735CDN/MFC-L3745CDW/MFC-L3750CDW/MFC-L3770CDW

DCP-L3510CDW/DCP-L3551CDW

1. Press **Menu**.
2. Press ▲ or ▼ to select the [Network] option, and then press **OK**.
3. Press ▲ or ▼ to select the network option you want, and then press **OK**. Repeat this step until you access the menu you want to configure, and then follow the LCD instructions.

MFC-L3710CW/MFC-L3735CDN/MFC-L3745CDW/MFC-L3750CDW/MFC-L3770CDW

1. Press [Settings] > [All Settings] > [Network].
2. Press ▲ or ▼ to display the network option you want, and then press it. Repeat this step until you access the menu you want to configure, and then follow the touchscreen LCD instructions.

Related Information

- Network

Related Topics:

- Settings Tables (DCP-L3510CDW/DCP-L3551CDW)
- Settings Tables (MFC-L3710CW/MFC-L3735CDN/MFC-L3745CDW/MFC-L3750CDW/MFC-L3770CDW)
- Learn about Network Management Software and Utilities
- Supported Basic Network Features

Supported Basic Network Features

The print server supports various features depending on the operating system. Use this table to see which network features and connections are supported by each operating system.

Operating Systems	Windows 7 Windows 8 Windows 10	Windows Server 2008/2008 R2/2012/2012 R2/2016	macOS v10.11.6 macOS v10.12.x macOS v10.13.x
Printing	Yes	Yes	Yes
Scanning	Yes		Yes
PC Fax Send (Available only for certain models)	Yes		Yes
PC Fax Receive (Available only for certain models)	Yes		
BRAdmin Light [1]	Yes	Yes	
BRAdmin Professional [1]	Yes	Yes	
Web Based Management [1]	Yes	Yes	Yes
Remote Setup [1] (Available only for certain models)	Yes		Yes
Status Monitor	Yes		Yes
Driver Deployment Wizard	Yes	Yes	

- Go to your model's **Downloads** page on the Brother Solutions Center at support.brother.com to download the latest version of BRAdmin Light.
- Go to your model's **Downloads** page on the Brother Solutions Center at support.brother.com to download the latest version of BRAdmin Professional.

Related Information

- Network

[1] The default login password to manage machine settings is **initpass**. We recommend you change it to protect your machine from unauthorised access.

Network Management Software and Utilities

Configure and change your Brother machine's network settings using a management utility.

- Learn about Network Management Software and Utilities
- Change Machine Settings from Your Computer
- Change Machine Settings Using Web Based Management

Learn about Network Management Software and Utilities

Web Based Management

Web Based Management is a utility that uses a standard web browser to manage your machine using the Hyper Text Transfer Protocol (HTTP) or Hyper Text Transfer Protocol over Secure Socket Layer (HTTPS). Type your machine's IP address into your web browser to access and change your print server settings.

BRAdmin Light (Windows)

BRAdmin Light is a utility for the initial setup of Brother network-connected devices. This utility can search for Brother products on your network, view the status and configure the basic network settings, such as IP address.

Go to your model's **Downloads** page on the Brother Solutions Center at support.brother.com to download BRAdmin Light.

- If using Windows Firewall, or the firewall function of an anti-spyware or antivirus application, temporarily disable them. When you are sure you can print, configure the software settings following the instructions.

BRAdmin Professional (Windows)

BRAdmin Professional is a utility for more advanced management of network-connected Brother devices. This utility can search for Brother products on your network and view the device status from an easy-to-read Windows Explorer-style screen that changes colour to identify the status of each device. You can configure network and device settings, and update device firmware from a Windows computer on your LAN. BRAdmin Professional can also log activity of Brother devices on your network and export the log data. For users who want to monitor locally-connected machines, install the Print Auditor Client software on the client computer. This utility allows you to use BRAdmin Professional to monitor machines that are connected to a client computer via the USB interface.

- Go to your model's **Downloads** page on the Brother Solutions Center at support.brother.com to download the latest version of BRAdmin Professional.
- Node name: The node name appears in the current BRAdmin Professional window. The default node name is "BRNxxxxxxxxxxxx" for a wired network or "BRWxxxxxxxxxxxx" for a wireless network (where "xxxxxxxxxxxx" is your machine's MAC Address / Ethernet address).
- If using Windows Firewall, or the firewall function of an anti-spyware or antivirus application, temporarily disable them. When you are sure you can print, configure the software settings following the instructions.

Remote Setup (Windows and Mac) (Available only for certain models)

Remote Setup is a program for configuring many machine and network settings from either a Windows or a Mac application. When you start this application, the settings on your machine are automatically downloaded to your computer and displayed on your computer screen. If you change the settings, you can upload them directly to the machine.

Windows

This utility can be used with either a USB or a network connection.

Mac

- Go to your model's **Downloads** page on the Brother Solutions Center at support.brother.com to download the Remote Setup.
- This utility can be used with a USB connection.

Related Information

- Network Management Software and Utilities

Related Topics:

- Change Machine Settings Using Web Based Management

Additional Methods of Configuring Your Brother Machine for a Wireless Network

Related Models: DCP-L3510CDW/DCP-L3551CDW/MFC-L3710CW/MFC-L3745CDW/MFC-L3750CDW/MFC-L3770CDW

To connect your machine to your wireless network, we recommend using the Brother installation disc.

- Before Configuring Your Brother Machine for a Wireless Network
- Configure Your Machine for a Wireless Network
- Configure Your Machine for a Wireless Network Using the One Push Method of Wi-Fi Protected Setup™ (WPS)
- Configure Your Machine for a Wireless Network Using the PIN Method of Wi-Fi Protected Setup™ (WPS)
- Configure Your Machine for a Wireless Network Using the Machine's Control Panel Setup Wizard
- Configure Your Machine for a Wireless Network When the SSID Is Not Broadcast
- Configure Your Machine for an Enterprise Wireless Network
- Use Wi-Fi Direct®

Before Configuring Your Brother Machine for a Wireless Network

Related Models: DCP-L3510CDW/DCP-L3551CDW/MFC-L3710CW/MFC-L3745CDW/MFC-L3750CDW/MFC-L3770CDW

Before attempting to configure a wireless network, confirm the following:

- If you are using an enterprise wireless network, you must know the User ID and Password.
- To achieve optimum results with normal everyday document printing, place the Brother machine as close to the wireless LAN access point/router as possible with minimal obstructions. Large objects and walls between the two devices and interference from other electronic devices can affect the data transfer speed of your documents.

  Due to these factors, wireless may not be the best method of connection for all types of documents and applications. If you are printing large files, such as multi-page documents with mixed text and large graphics, you may want to consider selecting wired Ethernet for faster data transfer (supported models only), or USB for the fastest throughput speed.
- Although the Brother machine can be used in both a wired and wireless network (supported models only), only one connection method can be used at a time. However, a wireless network connection and Wi-Fi Direct connection, or a wired network connection (supported models only) and Wi-Fi Direct connection can be used at the same time.

If you do not know the security information (for example, Network Name (SSID) and Network Key), consult the router manufacturer, your system administrator, or your Internet provider.

Related Information

- Additional Methods of Configuring Your Brother Machine for a Wireless Network

Configure Your Machine for a Wireless Network

Related Models: DCP-L3510CDW/DCP-L3551CDW/MFC-L3710CW/MFC-L3745CDW/MFC-L3750CDW/MFC-L3770CDW

1. Turn on your computer and insert the Brother installation disc into your computer.
   - For Windows, follow these instructions:
   - For Mac, click **Driver Download** to go to the Brother Solutions Center. Follow the on-screen instructions to install printer drivers.
2. The opening screen appears automatically.

   Choose your language, and then follow the on-screen instructions.

If the Brother screen does not appear, do the following:

- (Windows 7)

  Go to **Computer**. Double-click the CD/DVD icon, and then double-click **start.exe**.
- (Windows 8 and Windows 10)

  Click the (**File Explorer**) icon on the taskbar, and then go to **Computer** (**This PC**). Double-click the CD/DVD icon, and then double-click **start.exe**.
- If the **User Account Control** screen appears, click **Yes**.

3. Choose **Wireless Network Connection (Wi-Fi)**, and then click **Next**.
4. Follow the on-screen instructions.

You have completed the wireless network setup. To install the **Full Driver & Software Package** necessary for operating your machine, insert the Brother installation disc into your computer, or go to your model's **Downloads** page on the Brother Solutions Center at support.brother.com.

Related Information

- Additional Methods of Configuring Your Brother Machine for a Wireless Network

Configure Your Machine for a Wireless Network Using the One Push Method of Wi-Fi Protected Setup™ (WPS)

Related Models: DCP-L3510CDW/DCP-L3551CDW/MFC-L3710CW/MFC-L3745CDW/MFC-L3750CDW/MFC-L3770CDW

If your wireless access point/router supports WPS (PBC: Push Button Configuration), you can use WPS from your machine's control panel menu to configure your wireless network settings.

Routers or access points that support WPS are marked with this symbol:

>> DCP-L3510CDW/DCP-L3551CDW
>> MFC-L3710CW/MFC-L3745CDW/MFC-L3750CDW/MFC-L3770CDW

DCP-L3510CDW/DCP-L3551CDW

1. Press **Menu**.
2. Press ▲ or ▼ to select the `[Network]` option, and then press **OK**.
3. Press ▲ or ▼ to select the `[WLAN]` option, and then press **OK**.
4. Press ▲ or ▼ to select the `[WPS]` option, and then press **OK**.
5. When `[WLAN Enable?]` appears, enable the wireless network.

   This will start the wireless setup wizard.
6. When the LCD displays `[Press Key on rtr]`, press the WPS button on your wireless access point/router. Then follow the LCD instructions on your machine. Your machine will automatically detect your wireless access point/router and try to connect to your wireless network.

If your wireless device is connected successfully, the machine's LCD displays `[Connected]`.

You have completed the wireless network setup. To install the **Full Driver & Software Package** necessary for operating your machine, insert the Brother installation disc into your computer, or go to your model's **Downloads** page on the Brother Solutions Center at support.brother.com.

MFC-L3710CW/MFC-L3745CDW/MFC-L3750CDW/MFC-L3770CDW

1. Press `[Settings]` > `[All Settings]` > `[Network]` > `[WLAN]` > `[WPS]`.
2. When `[Enable WLAN?]` appears, press `[Yes]`.

   This will start the wireless setup wizard. To cancel, press `[No]`.
3. When the touchscreen displays `[Start WPS on your wireless access point/router, then press [OK].]`, press the WPS button on your wireless access point/router. Then press `[OK]` on your machine. Your machine will automatically detect your wireless access point/router and try to connect to your wireless network.

If your wireless device is connected successfully, the machine's LCD displays `[Connected]`.

You have completed the wireless network setup. To install the **Full Driver & Software Package** necessary for operating your machine, insert the Brother installation disc into your computer, or go to your model's **Downloads** page on the Brother Solutions Center at support.brother.com.

Related Information

- Additional Methods of Configuring Your Brother Machine for a Wireless Network

Related Topics:

- Wireless LAN Report Error Codes

Configure Your Machine for a Wireless Network Using the PIN Method of Wi-Fi Protected Setup™ (WPS)

Related Models: DCP-L3510CDW/DCP-L3551CDW/MFC-L3710CW/MFC-L3745CDW/MFC-L3750CDW/MFC-L3770CDW

If your wireless LAN access point/router supports WPS, you can use the Personal Identification Number (PIN) Method to configure your wireless network settings.

The PIN Method is one of the connection methods developed by the Wi-Fi Alliance®. By submitting a PIN created by an Enrollee (your machine) to the Registrar (a device that manages the wireless LAN), you can set up the wireless network and security settings. For more information on how to access WPS mode, see the instructions provided with your wireless access point/router.

Type A

Connection when the wireless LAN access point/router (1) doubles as the Registrar:

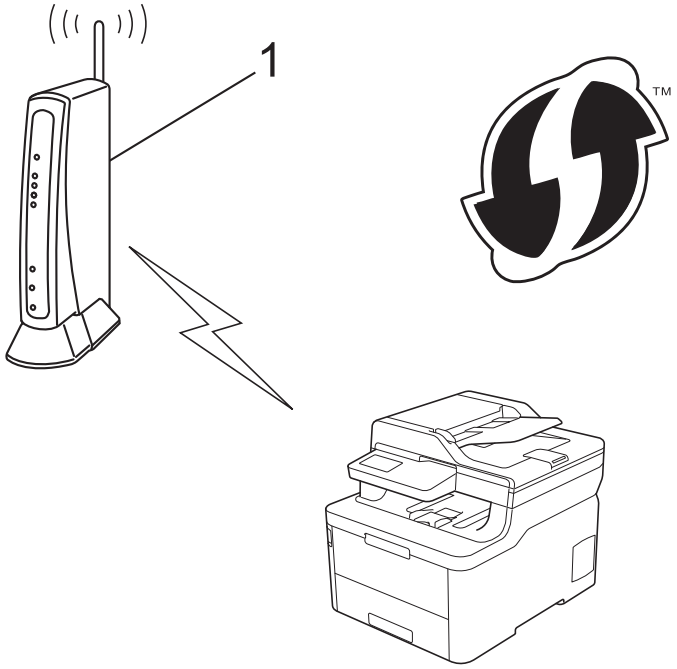

Type B

Connection when another device (2), such as a computer, is used as the Registrar:

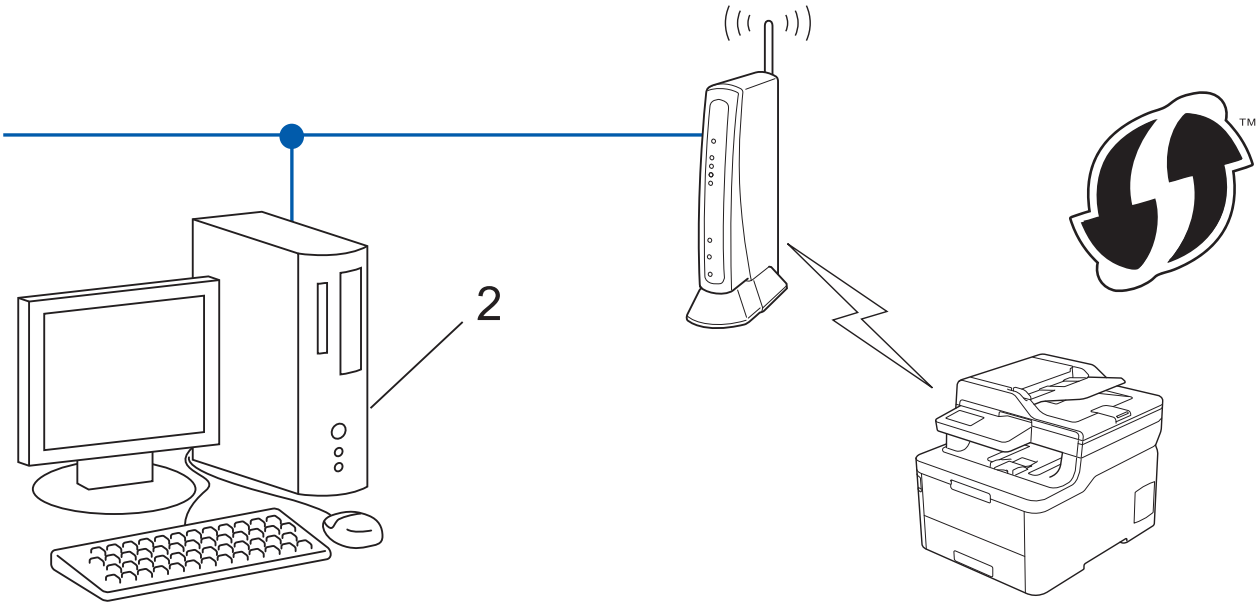

Routers or access points that support WPS are marked with this symbol:

>> DCP-L3510CDW/DCP-L3551CDW
>> MFC-L3710CW/MFC-L3745CDW/MFC-L3750CDW/MFC-L3770CDW

DCP-L3510CDW/DCP-L3551CDW

1. Press **Menu**.
2. Press ▲ or ▼ to select the `[Network]` option, and then press **OK**.
3. Press ▲ or ▼ to select the `[WLAN]` option, and then press **OK**.
4. Press ▲ or ▼ to select the `[WPS w/PIN Code]` option, and then press **OK**.
5. When `[WLAN Enable?]` appears, enable the wireless network.

   This will start the wireless setup wizard.
6. The LCD displays an eight-digit PIN and the machine starts searching for a wireless LAN access point/router.
7. Using a computer connected to the network, in your browser's address bar, type the IP address of the device you are using as the Registrar. (For example: http://192.168.1.2)
8. Go to the WPS settings page and type the PIN, and then follow the on-screen instructions.

- The Registrar is usually the wireless LAN access point/router.
- The settings page will differ depending on the brand of wireless LAN access point/router. For more information, see the instructions supplied with your wireless LAN access point/router.

If you are using a Windows 7, Windows 8, or Windows 10 computer as a Registrar, complete the following steps:

9. Do one of the following:
   - Windows 7

Click **(Start)** > **Devices and Printers** > **Add a device**.

- Windows 8

  Move your mouse to the lower right corner of your desktop. When the menu bar appears, click **Settings** > **Control Panel** > **Hardware and Sound** > **Devices and Printers** > **Add a device**.

- Windows 10

  Click > **Windows System** > **Control Panel**. In the **Hardware and Sound** group, click **Add a device**.

- To use a Windows 7, Windows 8, or Windows 10 computer as a Registrar, you must register it to your network in advance. For more information, see the instructions supplied with your wireless LAN access point/router.
- If you use Windows 7, Windows 8, or Windows 10 as a Registrar, you can install the printer driver after the wireless configuration by following the on-screen instructions. To install the **Full Driver & Software Package** necessary for operating your machine, insert the Brother installation disc into your computer or go to your model's **Downloads** page on the Brother Solutions Center at support.brother.com.

10. Select your machine and click **Next**.
11. Type the PIN displayed on the machine's LCD, and then click **Next**.
12. (Windows 7) Select your network, and then click **Next**.
13. Click **Close**.

If your wireless device is connected successfully, the machine's LCD displays `[Connected]`.

You have completed the wireless network setup. To install the **Full Driver & Software Package** necessary for operating your machine, insert the Brother installation disc into your computer, or go to your model's **Downloads** page on the Brother Solutions Center at support.brother.com.

MFC-L3710CW/MFC-L3745CDW/MFC-L3750CDW/MFC-L3770CDW

1. Press `[Settings]` > `[All Settings]` > `[Network]` > `[WLAN]` > `[WPS w/ PIN Code]`.
2. When `[Enable WLAN?]` appears, press `[Yes]`.

   This will start the wireless setup wizard. To cancel, press `[No]`.
3. The LCD displays an eight-digit PIN and the machine starts searching for a wireless LAN access point/router.
4. Using a computer connected to the network, in your browser's address bar, type the IP address of the device you are using as the Registrar. (For example: http://192.168.1.2)
5. Go to the WPS settings page and type the PIN, and then follow the on-screen instructions.

- The Registrar is usually the wireless LAN access point/router.
- The settings page will differ depending on the brand of wireless LAN access point/router. For more information, see the instructions supplied with your wireless LAN access point/router.

If you are using a Windows 7, Windows 8, or Windows 10 computer as a Registrar, complete the following steps:

6. Do one of the following:
   - Windows 7

     Click **(Start)** > **Devices and Printers** > **Add a device**.
   - Windows 8

     Move your mouse to the lower right corner of your desktop. When the menu bar appears, click **Settings** > **Control Panel** > **Hardware and Sound** > **Devices and Printers** > **Add a device**.
   - Windows 10

     Click > **Windows System** > **Control Panel**. In the **Hardware and Sound** group, click **Add a device**.

- To use a Windows 7, Windows 8, or Windows 10 computer as a Registrar, you must register it to your network in advance. For more information, see the instructions supplied with your wireless LAN access point/router.
- If you use Windows 7, Windows 8, or Windows 10 as a Registrar, you can install the printer driver after the wireless configuration by following the on-screen instructions. To install the **Full Driver & Software Package** necessary for operating your machine, insert the Brother installation disc into your computer or go to your model's **Downloads** page on the Brother Solutions Center at support.brother.com.

7. Select your machine and click **Next**.
8. Type the PIN displayed on the machine's LCD, and then click **Next**.
9. (Windows 7) Select your network, and then click **Next**.
10. Click **Close**.

If your wireless device is connected successfully, the machine's LCD displays `[Connected]`.

You have completed the wireless network setup. To install **Full Driver & Software Package** necessary for operating your device, insert the Brother installation disc into your computer or go to your model's **Downloads** page on the Brother Solutions Center at support.brother.com.

Related Information

- Additional Methods of Configuring Your Brother Machine for a Wireless Network

Related Topics:

- Wireless LAN Report Error Codes

Configure Your Machine for a Wireless Network Using the Machine's Control Panel Setup Wizard

Related Models: DCP-L3510CDW/DCP-L3551CDW/MFC-L3710CW/MFC-L3745CDW/MFC-L3750CDW/MFC-L3770CDW

>> DCP-L3510CDW/DCP-L3551CDW
>> MFC-L3710CW/MFC-L3745CDW/MFC-L3750CDW/MFC-L3770CDW

DCP-L3510CDW/DCP-L3551CDW

Before configuring your machine, we recommend writing down your wireless network settings. You will need this information before you continue with the configuration.

1. Check and record the current wireless network settings of the computer to which you are connecting.

Network Name (SSID)

Network Key

For example:

Network Name (SSID)
HELLO

Network Key
12345

- Your access point/router may support the use of multiple WEP keys, however your Brother machine supports the use of the first WEP key only.
- If you need assistance during setup and want to contact Brother customer service, make sure you have your SSID (Network Name) and Network Key ready. We cannot assist you in locating this information.
- If you do not know this information (SSID and Network Key), you cannot continue the wireless setup.

  How can I find this information?

  - Check the documentation provided with your wireless access point/router.
  - The initial SSID could be the manufacturer's name or the model name.
  - If you do not know the security information, please consult the router manufacturer, your system administrator, or your Internet provider.

2. Press **Menu**.
3. Press ▲ or ▼ to select the `[Network]` option, and then press **OK**.
4. Press ▲ or ▼ to select the `[WLAN]` option, and then press **OK**.
5. Press ▲ or ▼ to select the `[Setup Wizard]` option, and then press **OK**.
6. When `[WLAN Enable?]` appears, enable the wireless network.

   This will start the wireless setup wizard.
7. The machine will search for your network and display a list of available SSIDs. When a list of SSIDs appears, press ▲ or ▼ to select the SSID you want.
8. Press **OK**.

9. Do one of the following:
   - If you are using an authentication and encryption method that requires a Network Key, enter the Network Key you wrote down in the first step.

     Enter the WEP key, and then press **OK** to apply your settings.

     To apply the settings, select [Yes]. To cancel, select [No].
   - If your authentication method is Open System and your encryption mode is None, go to the next step.
   - If your WLAN access point/router supports WPS, [WPS is available] appears. To connect your machine using the automatic wireless mode, press ▲. (If you choose [No], enter the Network Key you wrote down in the first step.) When [Press WPS on rtr] appears, press the WPS button on your WLAN access point/router, and then press ▲ twice.
10. The machine attempts to connect to the wireless device you have selected.

If your wireless device is connected successfully, the machine's LCD displays [Connected].

You have completed the wireless network setup. To install the **Full Driver & Software Package** necessary for operating your machine, insert the Brother installation disc into your computer, or go to your model's **Downloads** page on the Brother Solutions Center at support.brother.com.

MFC-L3710CW/MFC-L3745CDW/MFC-L3750CDW/MFC-L3770CDW

Before configuring your machine, we recommend writing down your wireless network settings. You will need this information before you continue with the configuration.

1. Check and record the current wireless network settings of the computer to which you are connecting.

Network Name (SSID)

Network Key

For example:

Network Name (SSID)
HELLO

Network Key
12345

- Your access point/router may support the use of multiple WEP keys, however your Brother machine supports the use of the first WEP key only.
- If you need assistance during setup and want to contact Brother customer service, make sure you have your SSID (Network Name) and Network Key ready. We cannot assist you in locating this information.
- If you do not know this information (SSID and Network Key), you cannot continue the wireless setup.

  How can I find this information?

  a. Check the documentation provided with your wireless access point/router.

  b. The initial SSID could be the manufacturer's name or the model name.

  c. If you do not know the security information, please consult the router manufacturer, your system administrator, or your Interner provider.

2. Press [Settings] > [All Settings] > [Network] > [WLAN] > [Setup Wizard].
3. When [Enable WLAN?] appears, press [Yes].

   This will start the wireless setup wizard. To cancel, press [No].

4. The machine will search for your network and display a list of available SSIDs.

   If a list of SSIDs is displayed, swipe up or down or press ▲ or ▼ to display the SSID to which you want to connect, and then press the SSID.
5. Press [OK].
6. Do one of the following:
   - If you are using an authentication and encryption method that requires a Network Key, enter the Network Key you wrote down in the first step.

     When you have entered all the characters, press [OK].
   - If your authentication method is Open System and your encryption mode is None, go to the next step.
7. The machine attempts to connect to the wireless device you have selected.

If your wireless device is connected successfully, the machine's LCD displays [Connected].

You have completed the wireless network setup. To install **Full Driver & Software Package** necessary for operating your device, insert the Brother installation disc into your computer or go to your model's **Downloads** page on the Brother Solutions Center at support.brother.com.

Related Information

- Additional Methods of Configuring Your Brother Machine for a Wireless Network

Related Topics:

- How to Enter Text on Your Brother Machine
- Wireless LAN Report Error Codes

Configure Your Machine for a Wireless Network When the SSID Is Not Broadcast

Related Models: DCP-L3510CDW/DCP-L3551CDW/MFC-L3710CW/MFC-L3745CDW/MFC-L3750CDW/MFC-L3770CDW

>> DCP-L3510CDW/DCP-L3551CDW
>> MFC-L3710CW/MFC-L3745CDW/MFC-L3750CDW/MFC-L3770CDW

DCP-L3510CDW/DCP-L3551CDW

Before configuring your machine, we recommend writing down your wireless network settings. You will need this information before you continue with the configuration.

1. Check and write down the current wireless network settings.

Network Name (SSID)

Communication Mode	Authentication Method	Encryption Mode	Network Key
Infrastructure	Open System	NONE	-
		WEP	
	Shared Key	WEP	
	WPA/WPA2-PSK	AES	
		TKIP	

For example:

Network Name (SSID)
HELLO

Communication Mode	Authentication Method	Encryption Mode	Network Key
Infrastructure	WPA2-PSK	AES	12345678

If your router uses WEP encryption, enter the key used as the first WEP key. Your Brother machine supports the use of the first WEP key only.

2. Press **Menu**.
3. Press ▲ or ▼ to select the `[Network]` option, and then press **OK**.
4. Press ▲ or ▼ to select the `[WLAN]` option, and then press **OK**.
5. Press ▲ or ▼ to select the `[Setup Wizard]` option, and then press **OK**.
6. When `[WLAN Enable?]` appears, enable the wireless network.

   This will start the wireless setup wizard.
7. The machine will search for your network and display a list of available SSIDs. Press ▲ or ▼ to select the `[<New SSID>]` option, and then press **OK**.
8. Enter the SSID name, and then press **OK**.
9. Select the `[Infrastructure]` option, and then press **OK**.
10. Press ▲ or ▼ to select the Authentication Method you want, and then press **OK**.
11. Do one of the following:

- If you selected the [Open System] option, press ▲ or ▼ to select the Encryption Type [None] or [WEP], and then press **OK**.

  If you selected the [WEP] option for Encryption Type, enter the WEP key, and then press **OK**.
- If you selected the [Shared Key] option, enter the WEP key, and then press **OK**.
- If you selected the [WPA/WPA2-PSK] option, press ▲ or ▼ to select the Encryption Type [TKIP+AES] or [AES], and then press **OK**.

  Enter the WPA™ key, and then press **OK**.

Your Brother machine supports the use of the first WEP key only.

12. To apply the settings, select [Yes]. To cancel, select [No].
13. The machine attempts to connect to the wireless device you have selected.

If your wireless device is connected successfully, the machine's LCD displays [Connected].

You have completed the wireless network setup. To install the **Full Driver & Software Package** necessary for operating your machine, insert the Brother installation disc into your computer, or go to your model's **Downloads** page on the Brother Solutions Center at support.brother.com.

MFC-L3710CW/MFC-L3745CDW/MFC-L3750CDW/MFC-L3770CDW

Before configuring your machine, we recommend writing down your wireless network settings. You will need this information before you continue with the configuration.

1. Check and write down the current wireless network settings.

Network Name (SSID)

Communication Mode	Authentication Method	Encryption Mode	Network Key
Infrastructure	Open System	NONE	-
		WEP	
	Shared Key	WEP	
	WPA/WPA2-PSK	AES	
		TKIP	

For example:

Network Name (SSID)
HELLO

Communication Mode	Authentication Method	Encryption Mode	Network Key
Infrastructure	WPA2-PSK	AES	12345678

If your router uses WEP encryption, enter the key used as the first WEP key. Your Brother machine supports the use of the first WEP key only.

2. Press [Settings] > [All Settings] > [Network] > [WLAN] > [Setup Wizard].
3. When [Enable WLAN?] appears, press [Yes].

   This will start the wireless setup wizard. To cancel, press [No].
4. The machine will search for your network and display a list of available SSIDs. Swipe up or down or press ▲ or ▼ to display [<New SSID>]. Press [<New SSID>], and then press [OK].
5. Enter the SSID name, and then press [OK].

6. Press [Infrastructure] when instructed.
7. Select the Authentication Method.
8. Do one of the following:
   - If you selected the [Open System] option, press the Encryption type [None] or [WEP].

     If you selected the [WEP] option for Encryption type, select and enter the WEP key, and then press [OK].
   - If you selected the [Shared Key] option, select and enter the WEP key, and then press [OK].
   - If you selected the [WPA/WPA2-PSK] option, press the Encryption type [TKIP+AES] or [AES].

     Enter the WPA™ key, and then press [OK].

   - Your Brother machine supports the use of the first WEP key only.

9. The machine attempts to connect to the wireless device you have selected.

If your wireless device is connected successfully, the machine's LCD displays [Connected].

You have completed the wireless network setup. To install **Full Driver & Software Package** necessary for operating your device, insert the Brother installation disc into your computer or go to your model's **Downloads** page on the Brother Solutions Center at support.brother.com.

Related Information

- Additional Methods of Configuring Your Brother Machine for a Wireless Network

Related Topics:

- I Cannot Complete the Wireless Network Setup Configuration
- How to Enter Text on Your Brother Machine
- Wireless LAN Report Error Codes

Configure Your Machine for an Enterprise Wireless Network

Related Models: DCP-L3510CDW/DCP-L3551CDW/MFC-L3710CW/MFC-L3745CDW/MFC-L3750CDW/MFC-L3770CDW

>> DCP-L3510CDW/DCP-L3551CDW
>> MFC-L3710CW/MFC-L3745CDW/MFC-L3750CDW/MFC-L3770CDW

DCP-L3510CDW/DCP-L3551CDW

Before configuring your machine, we recommend writing down your wireless network settings. You will need this information before you continue with the configuration.

1. Check and record the current wireless network settings.

Network Name (SSID)

Communication Mode	Authentication Method	Encryption Mode	User ID	Password
Infrastructure	LEAP	CKIP		
	EAP-FAST/NONE	AES		
		TKIP		
	EAP-FAST/MS-CHAPv2	AES		
		TKIP		
	EAP-FAST/GTC	AES		
		TKIP		
	PEAP/MS-CHAPv2	AES		
		TKIP		
	PEAP/GTC	AES		
		TKIP		
	EAP-TTLS/CHAP	AES		
		TKIP		
	EAP-TTLS/MS-CHAP	AES		
		TKIP		
	EAP-TTLS/MS-CHAPv2	AES		
		TKIP		
	EAP-TTLS/PAP	AES		
		TKIP		
	EAP-TLS	AES		-
		TKIP		-

For example:

Network Name (SSID)
HELLO

Communication Mode	Authentication Method	Encryption Mode	User ID	Password
Infrastructure	EAP-FAST/MS-CHAPv2	AES	Brother	12345678

- If you configure your machine using EAP-TLS authentication, you must install the client certificate issued by a CA before you start configuration. Contact your network administrator about the client certificate. If you have installed more than one certificate, we recommend writing down the certificate name you want to use.
- If you verify your machine using the common name of the server certificate, we recommend writing down the common name before you start configuration. Contact your network administrator about the common name of the server certificate.

2. Press **Menu**.
3. Press ▲ or ▼ to select the following:
   a. Select `[Network]`. Press **OK**.
   b. Select `[WLAN]`. Press **OK**.
   c. Select `[Setup Wizard]`. Press **OK**.
4. When `[WLAN Enable?]` appears, enable the wireless network.

   This will start the wireless setup wizard.
5. The machine will search for your network and display a list of available SSIDs. Press ▲ or ▼ to select the `[<New SSID>]` option, and then press **OK**.
6. Enter the SSID name, and then press **OK**.
7. Select the `[Infrastructure]` option, and then press **OK**.
8. Press ▲ or ▼ to select the Authentication Method you want, and then press **OK**.
9. Do one of the following:
   - If you selected the `[LEAP]` option, enter the user ID, and then press **OK**.

     Enter the Password, and then press **OK**.
   - If you selected the `[EAP-FAST]`, `[PEAP]` or `[EAP-TTLS]` option, press ▲ or ▼ to select the Inner Authentication Method `[NONE]`, `[CHAP]`, `[MS-CHAP]`, `[MS-CHAPv2]`, `[GTC]` or `[PAP]`, and then press **OK**.

Depending on your Authentication Method, the Inner Authentication Method selections differ.

Press ▲ or ▼ to select the Encryption Type `[TKIP+AES]` or `[AES]`, and then press **OK**.

Press ▲ or ▼ to select the Verification Method `[No Verification]`, `[CA]` or `[CA+Server ID]`, and then press **OK**.

- If you selected the `[CA+Server ID]` option, enter the server ID, user ID and password (if required), and then press **OK** for each option.
- For other selections, enter the user ID and the Password, and then press **OK** for each option.

If you have not imported a CA certificate into your machine, the machine will display the message `[No Verification]`.

- If you selected the `[EAP-TLS]` option, press ▲ or ▼ to select the Encryption Type `[TKIP+AES]` or `[AES]`, and then press **OK**.

  When the machine displays a list of available Client Certificates, select the certificate you want.

  Press ▲ or ▼ to select the Verification Method `[No Verification]`, `[CA]` or `[CA+Server ID]`, and then press **OK**.
  - If you selected the `[CA+Server ID]` option, enter the server ID and user ID, and then press **OK** for each option.
  - For other selections, enter the user ID, and then press **OK**.

10. To apply the settings, select [Yes]. To cancel, select [No].
11. The machine will attempt to connect to the wireless device you have selected.

If your wireless device is connected successfully, the machine's LCD displays [Connected].

You have completed the wireless network setup. To install **Full Driver & Software Package** necessary for operating your device, insert the Brother installation disc into your computer or go to your model's **Downloads** page on the Brother Solutions Center at support.brother.com.

MFC-L3710CW/MFC-L3745CDW/MFC-L3750CDW/MFC-L3770CDW

Before configuring your machine, we recommend writing down your wireless network settings. You will need this information before you continue with the configuration.

1. Check and record the current wireless network settings.

Network Name (SSID)

Communication Mode	Authentication Method	Encryption Mode	User ID	Password
Infrastructure	LEAP	CKIP		
	EAP-FAST/NONE	AES		
		TKIP		
	EAP-FAST/MS-CHAPv2	AES		
		TKIP		
	EAP-FAST/GTC	AES		
		TKIP		
	PEAP/MS-CHAPv2	AES		
		TKIP		
	PEAP/GTC	AES		
		TKIP		
	EAP-TTLS/CHAP	AES		
		TKIP		
	EAP-TTLS/MS-CHAP	AES		
		TKIP		
	EAP-TTLS/MS-CHAPv2	AES		
		TKIP		
	EAP-TTLS/PAP	AES		
		TKIP		
	EAP-TLS	AES		-
		TKIP		-

For example:

Network Name (SSID)
HELLO

Communication Mode	Authentication Method	Encryption Mode	User ID	Password
Infrastructure	EAP-FAST/MS-CHAPv2	AES	Brother	12345678

- If you configure your machine using EAP-TLS authentication, you must install the client certificate issued by a CA before you start configuration. Contact your network administrator about the client certificate. If you have installed more than one certificate, we recommend writing down the certificate name you want to use.
- If you verify your machine using the common name of the server certificate, we recommend writing down the common name before you start configuration. Contact your network administrator about the common name of the server certificate.

2. Press [Settings] > [All Settings] > [Network] > [WLAN] > [Setup Wizard].
3. When [Enable WLAN?] appears, press [Yes].

   This will start the wireless setup wizard. To cancel, press [No].
4. The machine will search for your network and display a list of available SSIDs. Swipe up or down or press ▲ or ▼ to display [<New SSID>]. Press [<New SSID>], and then press [OK].
5. Enter the SSID name, and then press [OK].
6. Press [Infrastructure] when instructed.
7. Select the Authentication Method.
8. Do one of the following:
   - If you selected the [LEAP] option, enter the user ID, and then press [OK]. Enter the Password, and then press [OK].
   - If you selected the [EAP-FAST], [PEAP] or [EAP-TTLS] option, select the Inner Authentication method [NONE], [CHAP], [MS-CHAP], [MS-CHAPv2], [GTC] or [PAP].

   Depending on your Authentication method, the Inner Authentication method selections differ.

   Select the encryption type [TKIP+AES] or [AES].

   Select the verification method [No Verification], [CA] or [CA + Server ID].
   - If you selected the [CA + Server ID] option, enter the server ID, user ID and password (if required), and then press [OK] for each option.
   - For other selections, enter the user ID and Password, and then press [OK] for each option.

   If you have not imported a CA certificate into your machine, the machine displays [No Verification].
   - If you selected the [EAP-TLS] option, select the encryption type [TKIP+AES] or [AES].

     The machine will display a list of available Client Certificates, and then select the certificate.

     Select the verification method [No Verification], [CA] or [CA + Server ID].
     - If you selected the [CA + Server ID] option, enter the server ID and user ID, and then press [OK] for each option.
     - For other selections, enter the user ID, and then press [OK].
9. The machine attempts to connect to the wireless device you have selected.

If your wireless device is connected successfully, the machine's LCD displays [Connected].

You have completed the wireless network setup. To install **Full Driver & Software Package** necessary for operating your device, insert the Brother installation disc into your computer or go to your model's **Downloads** page on the Brother Solutions Center at support.brother.com.

Related Information

- Additional Methods of Configuring Your Brother Machine for a Wireless Network

Related Topics:

- Wireless LAN Report Error Codes

Use Wi-Fi Direct®

- Print or Scan from Your Mobile Device Using Wi-Fi Direct
- Configure Your Wi-Fi Direct Network
- I Cannot Complete the Wireless Network Setup Configuration

Print or Scan from Your Mobile Device Using Wi-Fi Direct

Related Models: DCP-L3510CDW/DCP-L3551CDW/MFC-L3710CW/MFC-L3745CDW/MFC-L3750CDW/MFC-L3770CDW

Wi-Fi Direct is one of the wireless configuration methods developed by the Wi-Fi Alliance®. It allows you to configure a secured wireless network between your Brother machine and a mobile device, such as an Android™ device, Windows device, iPhone, iPod touch, or iPad, without using an access point. Wi-Fi Direct supports wireless network configuration using the one-push or PIN Method of Wi-Fi Protected Setup™ (WPS). You can also configure a wireless network by manually setting an SSID and password. Your Brother machine's Wi-Fi Direct feature supports WPA2™ security with AES encryption.

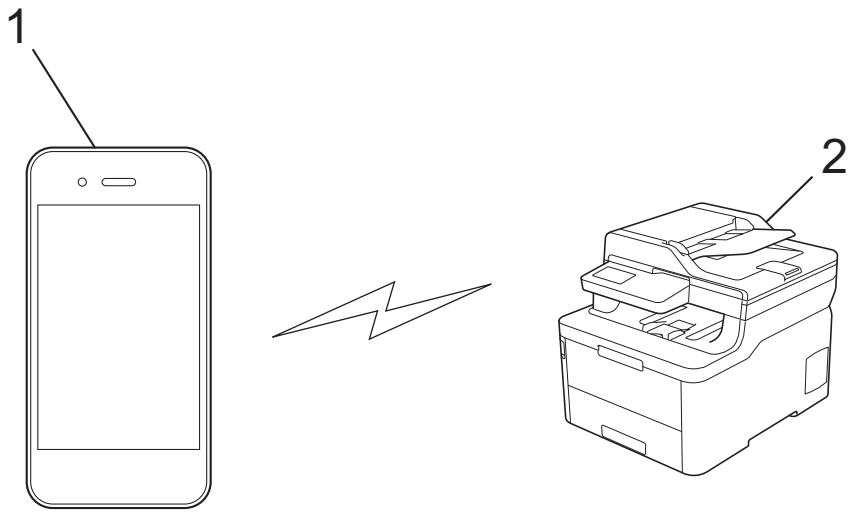

1. Mobile device
2. Your Brother machine

- Although the Brother machine can be used in both a wired and wireless network, only one connection method can be used at a time. However, a wireless network connection and Wi-Fi Direct connection, or a wired network connection (supported models only) and Wi-Fi Direct connection can be used at the same time.
- The Wi-Fi Direct-supported device can become a Group Owner (G/O). When configuring the Wi-Fi Direct network, the G/O serves as an access point.

Related Information

- Use Wi-Fi Direct®

Configure Your Wi-Fi Direct Network

Configure your Wi-Fi Direct network settings from your machine's control panel.

- Wi-Fi Direct Network Configuration Overview
- Configure Your Wi-Fi Direct Network Using the One-Push Method
- Configure Your Wi-Fi Direct Network Using the One-Push Method of Wi-Fi Protected Setup™ (WPS)
- Configure Your Wi-Fi Direct Network Using the PIN Method
- Configure Your Wi-Fi Direct Network Using the PIN Method of Wi-Fi Protected Setup™ (WPS)
- Configure Your Wi-Fi Direct Network Manually

Wi-Fi Direct Network Configuration Overview

Related Models: DCP-L3510CDW/DCP-L3551CDW/MFC-L3710CW/MFC-L3745CDW/MFC-L3750CDW/MFC-L3770CDW

The following instructions offer five methods for configuring your Brother machine in a wireless network environment. Select the method you prefer for your environment:

Check your mobile device for configuration.

1. Does your mobile device support Wi-Fi Direct?

Option	Description
Yes	Go to Step 2
No	Go to Step 3

2. Does your mobile device support one-push configuration for Wi-Fi Direct?

Option	Description
Yes	See *Related Information*: *Configure Your Wi-Fi Direct Network Using the One-Push Method*.
No	See *Related Information*: *Configure Your Wi-Fi Direct Network Using the PIN Method*.

3. Does your mobile device support Wi-Fi Protected Setup™ (WPS)?

Option	Description
Yes	Go to Step 4
No	See *Related Information*: *Configure Your Wi-Fi Direct Network Manually*.

4. Does your mobile device support one-push configuration for Wi-Fi Protected Setup™ (WPS)?

Option	Description
Yes	See *Related Information*: *Configure Your Wi-Fi Direct Network Using the One-Push Method of Wi-Fi Protected Setup™ (WPS)*.
No	See *Related Information*: *Configure Your Wi-Fi Direct Network Using the PIN Method of Wi-Fi Protected Setup™ (WPS)*.

To use Brother iPrint&Scan functionality in a Wi-Fi Direct network configured by one-push configuration using Wi-Fi Direct or by PIN Method configuration using Wi-Fi Direct, the device you use to configure Wi-Fi Direct must be running Android™ 4.0 or greater.

Related Information

- Configure Your Wi-Fi Direct Network

Related Topics:

- Configure Your Wi-Fi Direct Network Using the One-Push Method
- Configure Your Wi-Fi Direct Network Using the One-Push Method of Wi-Fi Protected Setup™ (WPS)

- Configure Your Wi-Fi Direct Network Using the PIN Method
- Configure Your Wi-Fi Direct Network Using the PIN Method of Wi-Fi Protected Setup™ (WPS)
- Configure Your Wi-Fi Direct Network Manually

Configure Your Wi-Fi Direct Network Using the One-Push Method

Related Models: DCP-L3510CDW/DCP-L3551CDW/MFC-L3710CW/MFC-L3745CDW/MFC-L3750CDW/MFC-L3770CDW

>> DCP-L3510CDW/DCP-L3551CDW
>> MFC-L3710CW/MFC-L3745CDW/MFC-L3750CDW/MFC-L3770CDW

DCP-L3510CDW/DCP-L3551CDW

If your mobile device supports Wi-Fi Direct, follow these steps to configure a Wi-Fi Direct network:

1. Press **Menu**.
2. Press ▲ or ▼ to select the `[Network]` option, and then press **OK**.
3. Press ▲ or ▼ to select the `[Wi-Fi Direct]` option, and then press **OK**.
4. Press ▲ or ▼ to select the `[Push Button]` option, and then press **OK**.
5. When `[Wi-Fi Direct On?]` appears, enable the Wi-Fi Direct network.
6. Activate Wi-Fi Direct on your mobile device (see your mobile device's user's guide for instructions) when `[Activate Wi-Fi Direct on other device and press OK.]` appears on the machine's LCD. Press **OK** on your machine.

   This will start the Wi-Fi Direct setup.
7. Do one of the following:
   - When your Brother machine is the Group Owner (G/O), connect your mobile device to the machine directly.
   - When your Brother machine is not the G/O, it will display available device names with which to configure a Wi-Fi Direct network. Press ▲ or ▼ to select the mobile device you want to connect to and press **OK**. To search for available devices again, select `[<Rescan>]`, and then press **OK**.
8. If your mobile device connects successfully, the machine's LCD displays `[Connected]`. You have completed the Wi-Fi Direct network setup.

MFC-L3710CW/MFC-L3745CDW/MFC-L3750CDW/MFC-L3770CDW

If your mobile device supports Wi-Fi Direct, follow these steps to configure a Wi-Fi Direct network:

When the machine receives the Wi-Fi Direct request from your mobile device, the message `[Wi-Fi Direct connection request received. Press [OK] to connect.]` will appear on the LCD. Press `[OK]` to connect.

1. Press `[Settings]` > `[All Settings]` > `[Network]` > `[Wi-Fi Direct]` > `[Push Button]`.
2. Activate Wi-Fi Direct on your mobile device (see your mobile device's user's guide for instructions) when `[Activate Wi-Fi Direct on other device. Then Press [OK].]` appears on the machine's LCD. Press `[OK]` on your machine.

   This will start the Wi-Fi Direct setup. To cancel, press .
3. Do one of the following:
   - When your Brother machine is the Group Owner (G/O), connect your mobile device to the machine directly.
   - When your Brother machine is not the G/O, it displays available device names with which to configure a Wi-Fi Direct network. Select the mobile device you want to connect to. Search for available devices again by pressing `[Rescan]`.

4. If your mobile device connects successfully, the machine's LCD displays `[Connected]`. You have completed the Wi-Fi Direct network setup.

Related Information

- Configure Your Wi-Fi Direct Network

Related Topics:

- Wi-Fi Direct Network Configuration Overview

Configure Your Wi-Fi Direct Network Using the One-Push Method of Wi-Fi Protected Setup™ (WPS)

Related Models: DCP-L3510CDW/DCP-L3551CDW/MFC-L3710CW/MFC-L3745CDW/MFC-L3750CDW/MFC-L3770CDW

>> DCP-L3510CDW/DCP-L3551CDW
>> MFC-L3710CW/MFC-L3745CDW/MFC-L3750CDW/MFC-L3770CDW

DCP-L3510CDW/DCP-L3551CDW

If your mobile device supports WPS (PBC: Push Button Configuration), follow these steps to configure a Wi-Fi Direct network:

1. Press **Menu**.
2. Press ▲ or ▼ to select the `[Network]` option, and then press **OK**.
3. Press ▲ or ▼ to select the `[Wi-Fi Direct]` option, and then press **OK**.
4. Press ▲ or ▼ to select the `[Group Owner]` option, and then press **OK**.
5. Press ▲ or ▼ to select the `[On]` option, and then press **OK**.
6. Press ▲ or ▼ to select the `[Push Button]` option, and then press **OK**.
7. When `[Wi-Fi Direct On?]` appears, enable the Wi-Fi Direct network.
8. Activate your mobile device's WPS one-push configuration method (see your mobile device's user's guide for instructions) when `[Activate Wi-Fi Direct on other device and press OK.]` appears on the machine's LCD. Press **OK** on your machine.

   This will start the Wi-Fi Direct setup.
9. If your mobile device connects successfully, the machine's LCD displays `[Connected]`. You have completed the Wi-Fi Direct network setup.

MFC-L3710CW/MFC-L3745CDW/MFC-L3750CDW/MFC-L3770CDW

If your mobile device supports WPS (PBC: Push Button Configuration), follow these steps to configure a Wi-Fi Direct network:

When the machine receives the Wi-Fi Direct request from your mobile device, the message `[Wi-Fi Direct connection request received. Press [OK] to connect.]` will appear on the LCD. Press `[OK]` to connect.

1. Press `[Settings]` > `[All Settings]` > `[Network]` > `[Wi-Fi Direct]` > `[Group Owner]`.
2. Press `[On]`.
3. Swipe up or down or press ▲ or ▼ to select the `[Push Button]` option. Press `[Push Button]`.
4. Activate your mobile device's WPS one-push configuration method (see your mobile device's user's guide for instructions) when `[Activate Wi-Fi Direct on other device. Then Press [OK].]` appears on the machine's LCD. Press `[OK]` on your Brother machine.

   This will start the Wi-Fi Direct setup. To cancel, press .
5. If your mobile device connects successfully, the machine's LCD displays `[Connected]`. You have completed the Wi-Fi Direct network setup.

Related Information

- Configure Your Wi-Fi Direct Network

Related Topics:

- Wi-Fi Direct Network Configuration Overview

Configure Your Wi-Fi Direct Network Using the PIN Method

Related Models: DCP-L3510CDW/DCP-L3551CDW/MFC-L3710CW/MFC-L3745CDW/MFC-L3750CDW/MFC-L3770CDW

>> DCP-L3510CDW/DCP-L3551CDW
>> MFC-L3710CW/MFC-L3745CDW/MFC-L3750CDW/MFC-L3770CDW

DCP-L3510CDW/DCP-L3551CDW

If your mobile device supports the PIN Method of Wi-Fi Direct, follow these steps to configure a Wi-Fi Direct network:

1. Press **Menu**.
2. Press ▲ or ▼ to select the `[Network]` option, and then press **OK**.
3. Press ▲ or ▼ to select the `[Wi-Fi Direct]` option, and then press **OK**.
4. Press ▲ or ▼ to select the `[PIN Code]` option, and then press **OK**.
5. When `[Wi-Fi Direct On?]` appears, enable the Wi-Fi Direct network.
6. Activate Wi-Fi Direct on your mobile device (see your mobile device's user's guide for instructions) when `[Activate Wi-Fi Direct on other device and press OK.]` appears on the machine's LCD. Press **OK** on your machine.

   This will start the Wi-Fi Direct setup.
7. Do one of the following:
   - When your Brother machine is the Group Owner (G/O), it will wait for a connection request from your mobile device. When `[Input PIN Code]` appears, enter the PIN displayed on your mobile device in your Brother machine. Press **OK** to complete the setup.

     If the PIN is displayed on your Brother machine, enter the PIN in your mobile device.
   - When your Brother machine is not the G/O, it will display available device names with which to configure a Wi-Fi Direct network. Press ▲ or ▼ to select the mobile device you want to connect to and press **OK**. To search for available devices again, select `[<Rescan>]`, and then press **OK**.
8. Do one of the following:
   - Follow the machine's instruction to display the PIN on your Brother machine, enter the PIN in your mobile device, and then go to the next step.
   - Follow the machine's instruction to enter the PIN displayed by your mobile device in your Brother machine. Press **OK**, and then go to the next step.

     If your mobile device does not display a PIN, press **Stop/Exit** on your Brother machine. Go back to the first step and try again.
9. If your mobile device connects successfully, the machine's LCD displays `[Connected]`. You have completed the Wi-Fi Direct network setup.

MFC-L3710CW/MFC-L3745CDW/MFC-L3750CDW/MFC-L3770CDW

If your mobile device supports the PIN Method of Wi-Fi Direct, follow these steps to configure a Wi-Fi Direct network:

When the machine receives the Wi-Fi Direct request from your mobile device, the message `[Wi-Fi Direct connection request received. Press [OK] to connect.]` will appear on the LCD. Press `[OK]` to connect.

1. Press `[Settings]` > `[All Settings]` > `[Network]` > `[Wi-Fi Direct]` > `[PIN Code]`.

2. Activate Wi-Fi Direct on your mobile device (see your mobile device's user's guide for instructions) when `[Activate Wi-Fi Direct on other device. Then Press [OK].]` appears on the machine's LCD. Press `[OK]` on your machine.

   This will start the Wi-Fi Direct setup. To cancel, press .

3. Do one of the following:
   - When your Brother machine is the Group Owner (G/O), it will wait for a connection request from your mobile device. When `[PIN Code]` appears, enter the PIN displayed on your mobile device in the machine. Press `[OK]` to complete the setup.

     If the PIN is displayed on your Brother machine, enter the PIN in your mobile device.
   - When your Brother machine is not the G/O, it displays available device names with which to configure a Wi-Fi Direct network. Select the mobile device you want to connect to. Search for available devices again by pressing `[Rescan]`.
4. Do one of the following:
   - Press `[Display PIN Code]` to display the PIN on your machine and enter the PIN in your mobile device. Go to the next step.
   - Press `[Input PIN Code]` to enter the PIN displayed on your mobile device in the machine, and then press `[OK]`. Go to the next step.

     If your mobile device does not display a PIN, press on your Brother machine. Go back to the first step and try again.
5. If your mobile device connects successfully, the machine's LCD displays `[Connected]`. You have completed the Wi-Fi Direct network setup.

Related Information

- Configure Your Wi-Fi Direct Network

Related Topics:

- Wi-Fi Direct Network Configuration Overview

Configure Your Wi-Fi Direct Network Using the PIN Method of Wi-Fi Protected Setup™ (WPS)

Related Models: DCP-L3510CDW/DCP-L3551CDW/MFC-L3710CW/MFC-L3745CDW/MFC-L3750CDW/MFC-L3770CDW

>> DCP-L3510CDW/DCP-L3551CDW
>> MFC-L3710CW/MFC-L3745CDW/MFC-L3750CDW/MFC-L3770CDW

DCP-L3510CDW/DCP-L3551CDW

If your mobile device supports the PIN Method of Wi-Fi Protected Setup™ (WPS), follow these steps to configure a Wi-Fi Direct network:

1. Press **Menu**.
2. Press ▲ or ▼ to select the `[Network]` option, and then press **OK**.
3. Press ▲ or ▼ to select the `[Wi-Fi Direct]` option, and then press **OK**.
4. Press ▲ or ▼ to select the `[Group Owner]` option, and then press **OK**.
5. Press ▲ or ▼ to select the `[On]` option, and then press **OK**.
6. Press ▲ or ▼ to select the `[PIN Code]` option, and then press **OK**.
7. When `[Wi-Fi Direct On?]` appears, enable the Wi-Fi Direct network.
8. Activate your mobile device's WPS PIN configuration method (see your mobile device's user's guide for instructions) when `[Activate Wi-Fi Direct on other device and press OK.]` appears on the machine's LCD. Press **OK** on your machine.

   This will start the Wi-Fi Direct setup.
9. The machine will wait for a connection request from your mobile device. When `[Input PIN Code]` appears, enter the PIN displayed on your mobile device in the machine.
10. Press **OK**.
11. If your mobile device connects successfully, the machine's LCD displays `[Connected]`. You have completed the Wi-Fi Direct network setup.

MFC-L3710CW/MFC-L3745CDW/MFC-L3750CDW/MFC-L3770CDW

If your mobile device supports the PIN Method of Wi-Fi Protected Setup™ (WPS), follow these steps to configure a Wi-Fi Direct network:

When the machine receives the Wi-Fi Direct request from your mobile device, the message `[Wi-Fi Direct connection request received. Press [OK] to connect.]` will appear on the LCD. Press `[OK]` to connect.

1. Press `[Settings]` > `[All Settings]` > `[Network]` > `[Wi-Fi Direct]` > `[Group Owner]`.
2. Press `[On]`.
3. Swipe up or down or press ▲ or ▼ to select the `[PIN Code]` option. Press `[PIN Code]`.
4. When `[Activate Wi-Fi Direct on other device. Then Press [OK].]` appears, activate your mobile device's WPS PIN configuration method (see your mobile device's user's guide for instructions) and then press `[OK]` on your Brother machine.

   This will start the Wi-Fi Direct setup. To cancel, press .

5. The machine will wait for a connection request from your mobile device. When [PIN Code] appears, enter the PIN displayed on your mobile device in to the machine. Press [OK].
6. If your mobile device connects successfully, the machine's LCD displays [Connected]. You have completed the Wi-Fi Direct network setup.

Related Information

- Configure Your Wi-Fi Direct Network

Related Topics:

- Wi-Fi Direct Network Configuration Overview

Configure Your Wi-Fi Direct Network Manually

Related Models: DCP-L3510CDW/DCP-L3551CDW/MFC-L3710CW/MFC-L3745CDW/MFC-L3750CDW/MFC-L3770CDW

>> DCP-L3510CDW/DCP-L3551CDW
>> MFC-L3710CW/MFC-L3745CDW/MFC-L3750CDW/MFC-L3770CDW

DCP-L3510CDW/DCP-L3551CDW

If your mobile device does not support Wi-Fi Direct or WPS, you must configure a Wi-Fi Direct network manually.

1. Press **Menu**.
2. Press ▲ or ▼ to select the `[Network]` option, and then press **OK**.
3. Press ▲ or ▼ to select the `[Wi-Fi Direct]` option, and then press **OK**.
4. Press ▲ or ▼ to select the `[Manual]` option, and then press **OK**.
5. When `[Wi-Fi Direct On?]` appears, enable the Wi-Fi Direct network.
6. The machine will display the SSID name and Password. Go to your mobile device's wireless network settings screen, select the SSID name, and then enter the password.
7. If your mobile device connects successfully, the machine's LCD displays `[Connected]`. You have completed the Wi-Fi Direct network setup.

MFC-L3710CW/MFC-L3745CDW/MFC-L3750CDW/MFC-L3770CDW

If your mobile device does not support Wi-Fi Direct or WPS, you must configure a Wi-Fi Direct network manually.

When the machine receives the Wi-Fi Direct request from your mobile device, the message `[Wi-Fi Direct connection request received. Press [OK] to connect.]` will appear on the LCD. Press `[OK]` to connect.

1. Press `[Settings]` > `[All Settings]` > `[Network]` > `[Wi-Fi Direct]` > `[Manual]`.
2. The machine will display the SSID name and Password. Go to your mobile device's wireless network settings screen, select the SSID name, and then enter the password.
3. If your mobile device connects successfully, the machine's LCD displays `[Connected]`. You have completed the Wi-Fi Direct network setup.

Related Information

- Configure Your Wi-Fi Direct Network

Related Topics:

- Wi-Fi Direct Network Configuration Overview

Advanced Network Features

- Print the Network Configuration Report
- Print the WLAN Report
- Synchronize Time with the SNTP Server Using Web Based Management

Print the Network Configuration Report

The Network Configuration Report lists the network configuration, including the network print server settings.

- Node Name: The Node Name appears on the current Network Configuration Report. The default Node Name is "BRNxxxxxxxxxxxx" for a wired network or "BRWxxxxxxxxxxxx" for a wireless network (where "xxxxxxxxxxxx" is your machine's MAC Address / Ethernet Address.)
- If the `[IP Address]` on the Network Configuration Report shows 0.0.0.0, wait for one minute and try printing it again.
- You can find your machine's settings, such as the IP address, subnet mask, node name, and MAC Address on the report, for example:
  - IP address: 192.168.0.5
  - Subnet mask: 255.255.255.0
  - Node name: BRN000ca0000499
  - MAC Address: 00-0c-a0-00-04-99

>> DCP-L3510CDW/DCP-L3551CDW
>> MFC-L3710CW/MFC-L3735CDN/MFC-L3745CDW/MFC-L3750CDW/MFC-L3770CDW

DCP-L3510CDW/DCP-L3551CDW

1. Press **Menu**.
2. Press ▲ or ▼ to display the `[Print Reports]` option, and then press **OK**.
3. Press ▲ or ▼ to select the `[Network Config]` option, and then press **OK**.
4. Press **Mono Start** or **Colour Start**.

MFC-L3710CW/MFC-L3735CDN/MFC-L3745CDW/MFC-L3750CDW/MFC-L3770CDW

1. Press `[Settings]` > `[All Settings]` > `[Print Reports]` > `[Network Configuration]`.
2. Press `[Yes]`.
3. Press .

Related Information

- Advanced Network Features

Related Topics:

- Where Can I Find My Brother Machine's Network Settings?
- Use the Network Connection Repair Tool (Windows)
- I Want to Check that My Network Devices are Working Correctly
- Access Web Based Management

Print the WLAN Report

Related Models: DCP-L3510CDW/DCP-L3551CDW/MFC-L3710CW/MFC-L3745CDW/MFC-L3750CDW/MFC-L3770CDW

The WLAN Report reflects your machine's wireless status. If the wireless connection fails, check the error code on the printed report.

>> DCP-L3510CDW/DCP-L3551CDW
>> MFC-L3710CW/MFC-L3745CDW/MFC-L3750CDW/MFC-L3770CDW

DCP-L3510CDW/DCP-L3551CDW

1. Press **Menu**.
2. Press ▲ or ▼ to display the `[Print Reports]` option, and then press **OK**.
3. Press ▲ or ▼ to select the `[WLAN Report]` option, and then press **OK**.
4. Press **Mono Start** or **Colour Start**.

   The machine will print the WLAN Report.

MFC-L3710CW/MFC-L3745CDW/MFC-L3750CDW/MFC-L3770CDW

1. Press `[Settings]` > `[All Settings]` > `[Print Reports]` > `[WLAN Report]`.
2. Press `[Yes]`.

   The machine will print the WLAN Report.
3. Press .

If the WLAN Report does not print, check your machine for errors. If there are no visible errors, wait for one minute and then try to print the report again.

Related Information

- Advanced Network Features
  - Wireless LAN Report Error Codes

Related Topics:

- My Brother Machine Cannot Print, Scan, or PC-FAX Receive over the Network
- I Want to Check that My Network Devices are Working Correctly

Wireless LAN Report Error Codes

Related Models: DCP-L3510CDW/DCP-L3551CDW/MFC-L3710CW/MFC-L3745CDW/MFC-L3750CDW/MFC-L3770CDW

If the Wireless LAN Report shows that the connection failed, check the error code on the printed report and see the corresponding instructions in the table:

Error Code	Problem and Recommended Solutions
TS-01	The wireless setting is not activated, change the wireless setting to ON. If a network cable is connected to your machine, disconnect it and change the wireless setting of your machine to ON.
TS-02	The wireless access point/router cannot be detected. 1. Check the following two points: • Unplug the power to your wireless access point/router, wait for 10 seconds, and then plug it back in. • If your WLAN access point/router is using MAC address filtering, confirm that the MAC address of the Brother machine is allowed in the filter. 2. If you manually entered the SSID and security information (SSID/authentication method/encryption method/Network Key), the information may be incorrect. Reconfirm the SSID and security information and re-enter the correct information as necessary. This device does not support a 5 GHz SSID/ESSID and you must select a 2.4 GHz SSID/ESSID. Make sure the access point/router is set to 2.4 GHz or 2.4 GHz/5 GHz mixed mode.
TS-03	The wireless network and security setting you entered may be incorrect. Reconfirm the wireless network settings. If you do not know this information, ask your network administrator.
TS-04	The Authentication/Encryption methods used by the selected wireless access point/router are not supported by your machine. Change the authentication and encryption method of the wireless access point/router. Your machine supports the following authentication methods: • WPA-Personal TKIP or AES • WPA2-Personal TKIP or AES • Open WEP or None (without encryption) • Shared key WEP If your problem is not solved, the SSID or network settings you entered may be incorrect. Confirm the wireless network settings.
TS-05	The security information (SSID/Network Key) is incorrect. Confirm the wireless security information (Authentication method/Encryption method/Network Key).
TS-06	The machine cannot detect a WLAN access point/router that has WPS enabled. Confirm the wireless security information (Authentication method/Encryption method/Network Key).

Error Code	Problem and Recommended Solutions
TS-07	The machine cannot detect a WLAN access point/router that has WPS enabled. If you want to connect with WPS, you must operate both your machine and the WLAN access point/router. Confirm the connection method for WPS on WLAN access point/router and try starting again. If you do not know how to operate your WLAN access point/router using WPS, see the documentation provided with your WLAN access point/router, ask the manufacturer of your WLAN access point/router or ask your network administrator.
TS-08	Two or more WLAN access points that have WPS enabled are detected. • Confirm that only one WLAN access point/router within range has the WPS method active and try again. • Try starting again after few minutes in order to avoid effects from other access points.

Related Information

- Print the WLAN Report

Related Topics:

- My Brother Machine Cannot Print, Scan, or PC-FAX Receive over the Network
- I Want to Check that My Network Devices are Working Correctly
- Configure Your Machine for a Wireless Network Using the One Push Method of Wi-Fi Protected Setup™ (WPS)
- Configure Your Machine for a Wireless Network Using the PIN Method of Wi-Fi Protected Setup™ (WPS)
- Configure Your Machine for a Wireless Network Using the Machine's Control Panel Setup Wizard
- Configure Your Machine for a Wireless Network When the SSID Is Not Broadcast
- Configure Your Machine for an Enterprise Wireless Network

Synchronize Time with the SNTP Server Using Web Based Management

The Simple Network Time Protocol (SNTP) is used to synchronize the time used by the machine for authentication with the SNTP time server. (This is not the time displayed on the machine's LCD.) You can automatically or manually synchronize the machine's time with the Coordinated Universal Time (UTC) provided by the SNTP time server.

- Configure Date and Time Using Web Based Management
- Configure the SNTP Protocol Using Web Based Management

Configure Date and Time Using Web Based Management

Configure date and time to synchronize the time used by the machine with the SNTP time server.

This feature is not available in some countries.

1. Start your web browser.
2. Type "https://machine's IP address" in your browser's address bar (where "machine's IP address" is the machine's IP address).

   For example:

   https://192.168.1.2
3. If the machine prompts you for a password, type it, and then click .
4. Click the **Administrator** tab.
5. Click **Date&Time** in the left navigation bar.

Select the time difference between your location and UTC from the **Time Zone** drop-down list. For example, the time zone for Eastern Time in the USA and Canada is UTC-05:00.

6. Verify the **Time Zone** settings.
7. Select the **Synchronize with SNTP server** check box.
8. Click **Submit**.

Related Information

- Synchronize Time with the SNTP Server Using Web Based Management

Configure the SNTP Protocol Using Web Based Management

Configure the SNTP protocol to synchronize the time the machine uses for authentication with the time kept by the SNTP time server.

1. Start your web browser.
2. Type "https://machine's IP address" in your browser's address bar (where "machine's IP address" is the machine's IP address).

   For example:

   https://192.168.1.2
3. If the machine prompts you for a password, type it, and then click .
4. Click the **Network** tab.
5. Click the **Protocol** menu in the left navigation bar.
6. Select the **SNTP** check box to activate the settings.
7. Click **Submit**.
8. Restart your Brother machine to activate the configuration.
9. Next to the SNTP check box, click **Advanced Settings**.
10. Select the profile you want to set up or change.

Option	Description
Status	Displays whether the SNTP protocol is enabled or disabled.
Synchronization Status	Confirm the latest synchronization status.
SNTP Server Method	Select **AUTO** or **STATIC**. • **AUTO** If you have a DHCP server in your network, the SNTP server will obtain the address from that server automatically. • **STATIC** Type the address you want to use.
Primary SNTP Server Address **Secondary SNTP Server Address**	Type the server address (up to 64 characters). The secondary SNTP server address is used as a backup to the primary SNTP server address. If the primary server is unavailable, the machine will contact the secondary SNTP server.
Primary SNTP Server Port **Secondary SNTP Server Port**	Type the port number (1-65535). The secondary SNTP server port is used as a backup to the primary SNTP server port. If the primary port is unavailable, the machine will contact the secondary SNTP port.
Synchronization Interval	Type the number of hours between server synchronization attempts (1-168 hours).

11. Click **Submit**.

Related Information

- Synchronize Time with the SNTP Server Using Web Based Management

Technical Information for Advanced Users

- Reset the Network Settings to the Factory Settings

Reset the Network Settings to the Factory Settings

You can use your machine's control panel to reset the print server to its default factory settings. This resets all information, such as the password and IP address.

- This feature restores all wired (supported models only) and wireless network settings to the factory settings.
- You can also reset the print server to its factory settings using BRAdmin Light, BRAdmin Professional, or Web Based Management.

>> DCP-L3510CDW/DCP-L3551CDW
>> MFC-L3710CW/MFC-L3735CDN/MFC-L3745CDW/MFC-L3750CDW/MFC-L3770CDW

DCP-L3510CDW/DCP-L3551CDW

1. Press **Menu**.
2. Press ▲ or ▼ to display the `[Network]` option, and then press **OK**.
3. Press ▲ or ▼ to display the `[Network Reset]` option, and then press **OK**.
4. Follow the machine's instruction to reset the network settings.

   The machine will restart.

MFC-L3710CW/MFC-L3735CDN/MFC-L3745CDW/MFC-L3750CDW/MFC-L3770CDW

1. Press `[Settings]` > `[All Settings]` > `[Network]` > `[Network Reset]`.
2. `[Machine will reboot after resetting. Press [OK] for 2 seconds to confirm.]` appears. Press `[OK]` for two seconds to confirm.

   The machine will restart.

Related Information

- Technical Information for Advanced Users

Security

- Lock the Machine Settings
- Network Security Features

Lock the Machine Settings

Before turning on the machine's Access Lock, make a careful note of your password. If you forget the password, you must reset all passwords stored in the machine by contacting your administrator or Brother customer service.

- Setting Lock Overview

Setting Lock Overview

Use the Setting Lock feature to block unauthorised access to machine settings.
When Setting Lock is set to On, you cannot access the machine settings without entering the password.

- Set the Setting Lock Password
- Change the Setting Lock Password
- Turn Setting Lock On

Set the Setting Lock Password

>> DCP-L3510CDW/DCP-L3551CDW
>> MFC-L3710CW/MFC-L3735CDN/MFC-L3745CDW/MFC-L3750CDW/MFC-L3770CDW

DCP-L3510CDW/DCP-L3551CDW

1. Press **Menu**.
2. Press ▲ or ▼ to display the `[General Setup]` option, and then press **OK**.
3. Press ▲ or ▼ to display the `[Setting Lock]` option, and then press **OK**.
4. Enter a four-digit number for the password.
5. Press **OK**.
6. When the LCD displays `[Verify:]`, re-enter the password.
7. Press **OK**.
8. Press **Stop/Exit**.

MFC-L3710CW/MFC-L3735CDN/MFC-L3745CDW/MFC-L3750CDW/MFC-L3770CDW

1. Press `[Settings]` > `[All Settings]` > `[General Setup]` > `[Setting Lock]`.
2. Enter a four-digit number for the password.
3. Press `[OK]`.
4. When the LCD displays `[Verify]`, re-enter the password.
5. Press `[OK]`.
6. Press .

Related Information

- Setting Lock Overview

Change the Setting Lock Password

>> DCP-L3510CDW/DCP-L3551CDW
>> MFC-L3710CW/MFC-L3735CDN/MFC-L3745CDW/MFC-L3750CDW/MFC-L3770CDW

DCP-L3510CDW/DCP-L3551CDW

1. Press **Menu**.
2. Press ▲ or ▼ to display the `[General Setup]` option, and then press **OK**.
3. Press ▲ or ▼ to display the `[Setting Lock]` option, and then press **OK**.
4. Press ▲ or ▼ to select the `[Set Password]` option, and then press **OK**.
5. Enter the current four-digit password.
6. Press **OK**.
7. Enter a new four-digit password.
8. Press **OK**.
9. When the LCD displays `[Verify:]`, re-enter the password.
10. Press **OK**.
11. Press **Stop/Exit**.

MFC-L3710CW/MFC-L3735CDN/MFC-L3745CDW/MFC-L3750CDW/MFC-L3770CDW

1. Press `[Settings]` > `[All Settings]` > `[General Setup]` > `[Setting Lock]` > `[Set Password]`.
2. Enter the current four-digit password.
3. Press `[OK]`.
4. Enter a new four-digit password.
5. Press `[OK]`.
6. When the LCD displays `[Verify]`, re-enter the password.
7. Press `[OK]`.
8. Press .

Related Information

- Setting Lock Overview

Turn Setting Lock On

>> DCP-L3510CDW/DCP-L3551CDW
>> MFC-L3710CW/MFC-L3735CDN/MFC-L3745CDW/MFC-L3750CDW/MFC-L3770CDW

DCP-L3510CDW/DCP-L3551CDW

1. Press **Menu**.
2. Press ▲ or ▼ to display the `[General Setup]` option, and then press **OK**.
3. Press ▲ or ▼ to display the `[Setting Lock]` option, and then press **OK**.
4. Press **OK** when the LCD displays `[On]`.
5. Enter the current four-digit password.
6. Press **OK**.

MFC-L3710CW/MFC-L3735CDN/MFC-L3745CDW/MFC-L3750CDW/MFC-L3770CDW

1. Press `[Settings]` > `[All Settings]` > `[General Setup]` > `[Setting Lock]` > `[Lock Off⇒On]`.
2. Enter the current four-digit password.
3. Press `[OK]`.

Related Information

- Setting Lock Overview

Network Security Features

- Before Using Network Security Features
- Secure Function Lock 3.0
- Manage Your Network Machine Securely Using SSL/TLS
- Send an Email Securely
- Use IEEE 802.1x Authentication for a Wired or a Wireless Network
- Store Print Log to Network

Before Using Network Security Features

Your Brother machine employs some of the latest network security and encryption protocols available today. These network features can be integrated into your overall network security plan to help protect your data and prevent unauthorised access to the machine.

We recommend disabling the Telnet, FTP server and TFTP protocols. Accessing the machine using these protocols is not secure.

Related Information

- Network Security Features

Secure Function Lock 3.0

Brother's Secure Function Lock 3.0 increases security by restricting the functions available on your Brother machine.

- Before Using Secure Function Lock 3.0
- Configure Secure Function Lock 3.0 Using Web Based Management
- Scan Using Secure Function Lock 3.0
- Configure Public Mode for Secure Function Lock 3.0
- Additional Secure Function Lock 3.0 Features

Before Using Secure Function Lock 3.0

Use Secure Function Lock to configure passwords, set specific user page limits, and grant access to some or all of the functions listed here.

You can configure and change the following Secure Function Lock 3.0 settings using Web Based Management or BRAdmin Professional (Windows):

- **Print**

  Print includes print jobs sent via AirPrint, Google Cloud Print™ and Brother iPrint&Scan.

  If you register users' login names in advance, the users do not need to enter their passwords when they use the print function.
- **Color Print**
- **Copy**
- **Scan**

  Scan includes scan jobs sent via Brother iPrint&Scan.
- **Send** (supported models only)
- **Receive** (supported models only)
- USB Direct Print
- Scan to USB (supported models only)
- **Web Connect** (supported models only)
- **Apps** (supported models only)
- **Page Limits**
- **Page Counters**

Related Information

- Secure Function Lock 3.0

Configure Secure Function Lock 3.0 Using Web Based Management

1. Start your web browser.
2. Type "https://machine's IP address" in your browser's address bar (where "machine's IP address" is the machine's IP address).

   For example:

   https://192.168.1.2
3. If the machine prompts you for a password, type it, and then click .
4. Click the **Administrator** tab.
5. Click the **Restriction Management** or **User Restriction Function** menu in the left navigation bar.
6. Select **Secure Function Lock**.
7. Click **Submit**.
8. Click the **Restricted Functions** menu in the left navigation bar.
9. In the **User List / Restricted Functions** field, type a group name or user name.
10. In the **Print** and the other columns, select a check box to allow or clear a check box to restrict the function listed.
11. To configure the maximum page count, select the **On** check box in the **Page Limits** column, and then type the maximum number in the **Max. Pages** field.
12. Click **Submit**.
13. Click the **User List** menu in the left navigation bar.
14. In the **User List** field, type the user name.
15. In the **PIN Number** field, type a four-digit password.
16. Select **User List / Restricted Functions** from the drop-down list for each user.
17. Click **Submit**.

Related Information

- Secure Function Lock 3.0

Scan Using Secure Function Lock 3.0

Setting Scan restrictions (for administrators)

Secure Function Lock 3.0 allows an administrator to restrict which users are allowed to scan. When the Scan feature is set to Off for the public user setting, only users who have the **Scan** check box selected will be able to scan.

Using the Scan feature (for restricted users)

- To scan using the machine's control panel:

  Restricted users must enter their PINs on the machine's control panel to access Scan mode.
- To scan from a computer:

  Restricted users must enter their PINs on the machine's control panel before scanning from their computers. If the PIN is not entered on the machine's control panel, an error message will appear on the user's computer.

Related Information

- Secure Function Lock 3.0

Configure Public Mode for Secure Function Lock 3.0

Use the Secure Function Lock screen to set up Public Mode, which limits the functions available to public users. Public users will not need to enter a password to access the features made available through Public Mode settings.

Public Mode includes print jobs sent via Google Cloud Print™, Brother iPrint&Scan, and CUPS driver (Mac).

1. Start your web browser.
2. Type "https://machine's IP address" in your browser's address bar (where "machine's IP address" is the machine's IP address).

   For example:

   https://192.168.1.2
3. If the machine prompts you for a password, type it, and then click .
4. Click the **Administrator** tab.
5. Click the **Restriction Management** or **User Restriction Function** menu in the left navigation bar.
6. Select **Secure Function Lock**.
7. Click **Submit**.
8. Click the **Restricted Functions** menu.
9. In the **Public Mode** row, select a check box to allow or clear a check box to restrict the function listed.
10. Click **Submit**.

Related Information

- Secure Function Lock 3.0

Related Topics:

- Register Your Machine with Google Cloud Print Using Web Based Management

Additional Secure Function Lock 3.0 Features

Configure the following features in the Secure Function Lock screen:

All Counter Reset

Click **All Counter Reset**, in the **Page Counters** column, to reset the page counter.

Export to CSV file

Click **Export to CSV file**, to export the current page counter including **User List / Restricted Functions** information as a CSV file.

Last Counter Record

Click **Last Counter Record** if you want the machine to retain the page count after the counter has been reset.

Counter Auto Reset

Click **Counter Auto Reset** to configure the time interval you want between page counter reset. Choose a daily, weekly, or monthly interval.

Related Information

- Secure Function Lock 3.0

Manage Your Network Machine Securely Using SSL/TLS

- Introduction to SSL/TLS
- Certificates and Web Based Management
- Manage Your Network Machine Securely Using Web Based Management
- Manage Your Network Machine Securely Using BRAdmin Professional (Windows)
- Print Documents Securely Using SSL/TLS

Introduction to SSL/TLS

Secure Socket Layer (SSL) or Transport Layer Security (TLS) is an effective method of protecting data sent over a local or wide area network (LAN or WAN). It works by encrypting data, such as a print job, sent over a network, so anyone trying to capture it will not be able to read it.

SSL/TLS can be configured on both wired and wireless networks and will work with other forms of security such as WPA keys and firewalls.

Related Information

- Manage Your Network Machine Securely Using SSL/TLS
  - Brief History of SSL/TLS
  - Benefits of Using SSL/TLS

Brief History of SSL/TLS

SSL/TLS was originally created to secure web traffic information, particularly data sent between web browsers and servers. For example, when you use Internet Explorer for Internet Banking and you see https:// and the little padlock icon in the web browser, you are using SSL. SSL grew to work with additional applications, such as Telnet, printer, and FTP software, in order to become a universal solution for online security. Its original design intentions are still being used today by many online retailers and banks to secure sensitive data, such as credit card numbers, customer records, etc.

SSL/TLS uses extremely high levels of encryption and is trusted by banks all over the world.

Related Information

- Introduction to SSL/TLS

Benefits of Using SSL/TLS

The primary benefit of using SSL/TLS on Brother machines is to guarantee secure printing over an IP network by restricting unauthorised users from reading data sent to the machine. SSL's key selling point is that it can be used to print confidential data securely. For example, an HR department in a large company may be printing wage slips on a regular basis. Without encryption, the data contained on these wages slips can be read by other network users. However, with SSL/TLS, anyone trying to capture the data will see a confusing page of code and not the actual wage slip.

Related Information

- Introduction to SSL/TLS

Certificates and Web Based Management

You must configure a certificate to manage your networked Brother machine securely using SSL/TLS. You must use Web Based Management to configure a certificate.

- Supported Security Certificate Features
- Create and Install a Certificate
- Manage Multiple Certificates

Supported Security Certificate Features

Your Brother machine supports the use of multiple security certificates, which allows secure management, authentication, and communication with the machine. The following security certificate features can be used with the machine:

- SSL/TLS communication
- SSL communication for SMTP
- IEEE 802.1x authentication

The Brother machine supports the following:

- Pre-installed certificate

  Your machine has a pre-installed self-signed certificate. This certificate enables you to use SSL/TLS communication without creating or installing a different certificate.

  The pre-installed self-signed certificate protects your communication up to a certain level. We recommend using a certificate that is issued by a trusted organisation for better security.

- Self-signed certificate

  This print server issues its own certificate. Using this certificate, you can easily use the SSL/TLS communication without creating or installing a different certificate from a CA.

- Certificate from a Certificate Authority (CA)

  There are two methods for installing a certificate from a CA. If you already have a certificate from a CA or if you want to use a certificate from an external trusted CA:

  - When using a Certificate Signing Request (CSR) from this print server.
  - When importing a certificate and a private key.

- Certificate Authority (CA) Certificate

  To use a CA certificate that identifies the CA and owns its private key, you must import that CA certificate from the CA before configuring the security features of the Network.

  - If you are going to use SSL/TLS communication, we recommend contacting your system administrator first.
  - When you reset the print server back to its default factory settings, the certificate and the private key that are installed will be deleted. If you want to keep the same certificate and the private key after resetting the print server, export them before resetting, and then reinstall them.

Related Information

- Certificates and Web Based Management

Create and Install a Certificate

- Step by Step Guide for Creating and Installing a Certificate
- Create and Install a Self-signed Certificate
- Create and Install a Certificate from a Certificate Authority (CA)
- Import and Export a CA Certificate

Step by Step Guide for Creating and Installing a Certificate

There are two options when choosing a security certificate: use a self-signed certificate or use a certificate from a Certificate Authority (CA).

These are a brief summary of the actions required, based on the option you choose.

Option 1

Self-Signed Certificate

1. Create a self-signed certificate using Web Based Management.
2. Install the self-signed certificate on your computer.

Option 2

Certificate from a CA

1. Create a Certificate Signing Request (CSR) using Web Based Management.
2. Install the certificate issued by the CA on your Brother machine using Web Based Management.
3. Install the certificate on your computer.

Related Information

- Create and Install a Certificate

Create and Install a Self-signed Certificate

- Create a Self-signed Certificate
- Install the Self-signed Certificate for Windows users with Administrator Rights
- Import and Export the Self-signed Certificate on your Brother Machine

Create a Self-signed Certificate

1. Start your web browser.
2. Type "https://machine's IP address" in your browser's address bar (where "machine's IP address" is the machine's IP address).

   For example:

   https://192.168.1.2

- If you are using a Domain Name System or enable a NetBIOS name, you can type another name, such as "SharedPrinter" instead of the IP address.
  - For example:

    https://SharedPrinter

  If you enable a NetBIOS name, you can also use the node name.
  - For example:

    https://brnxxxxxxxxxxxx

  The NetBIOS name can be found in the Network Configuration Report.
- For Mac, access Web Based Management by clicking the machine's icon on the **Status Monitor** screen.

3. If the machine prompts you for a password, type it, and then click .
4. Click the **Network** tab.
5. Click the **Security** tab.
6. Click the **Certificate** menu in the left navigation bar.
7. Click **Create Self-Signed Certificate**.
8. Enter a **Common Name** and a **Valid Date**.
   - The length of the **Common Name** is less than 64 bytes. Enter an identifier, such as an IP address, node name, or domain name to use when accessing this machine through SSL/TLS communication. The node name is displayed by default.
   - A warning will appear if you use the IPPS or HTTPS protocol and enter a different name in the URL than the **Common Name** that was used for the self-signed certificate.
9. Select your setting from the **Public Key Algorithm** drop-down list. The default setting is **RSA(2048bit)**.
10. Select your setting from the **Digest Algorithm** drop-down list. The default setting is **SHA256**.
11. Click **Submit**.
12. Click the **Network** tab.
13. Click the **Protocol** menu in the left navigation bar.
14. Click **HTTP Server Settings**.
15. Select the certificate you want to configure from the **Select the Certificate** drop-down list.
16. Click **Submit**.
17. Click **Yes** to restart your print server.

The self-signed certificate is created and saved in your machine's memory.

To use SSL/TLS communication, the self-signed certificate must be installed on your computer.

Related Information

- Create and Install a Self-signed Certificate

Install the Self-signed Certificate for Windows users with Administrator Rights

The following steps are for Microsoft Internet Explorer. If you use another web browser, consult the documentation for your web browser to get help with installing certificates.

1. Do one of the following:
   - (Windows 7 and Windows Server 2008)

     Click **(Start)** > **All Programs**.
   - (Windows 8)

     Right-click the (**Internet Explorer**) icon on the taskbar.
   - (Windows 10 and Windows Server 2016)

     Click > **Windows Accessories**.
   - (Windows Server 2012 and Windows Server 2012 R2)

     Click (**Internet Explorer**), and then right-click the (**Internet Explorer**) icon that appears on the taskbar.
2. Right-click **Internet Explorer**, and then click **Run as administrator**.

   If the **More** option appears, click **More**.

   If the **User Account Control** screen appears, click **Yes**.
3. Type "https://machine's IP address" in your browser's address bar to access your machine (where "machine's IP address" is the machine's IP address or the node name that you assigned for the certificate).
4. Click **Continue to this website (not recommended).**
5. Click **Certificate Error**, and then click **View certificates**.

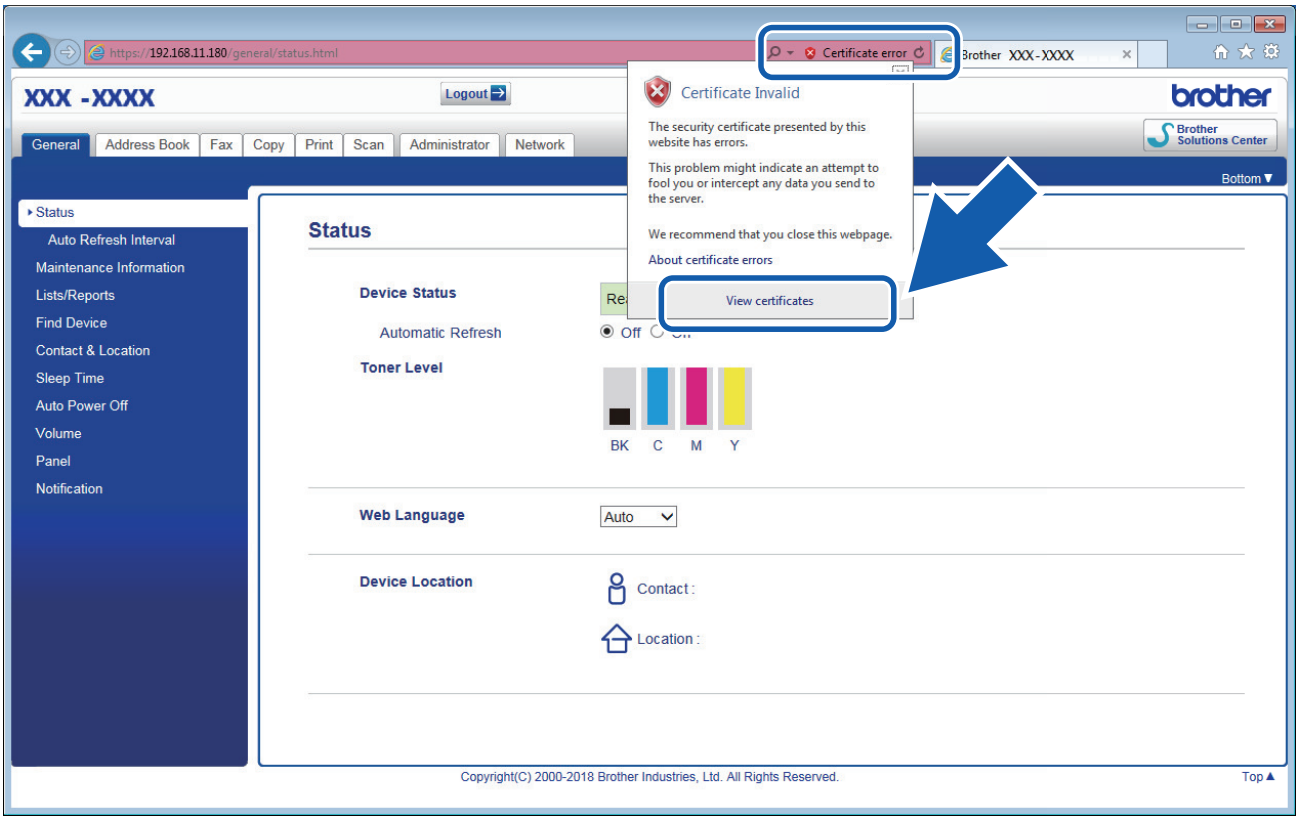

6. Click **Install Certificate…**.
7. When the **Certificate Import Wizard** appears, click **Next**.
8. Select **Place all certificates in the following store**, and then click **Browse…**.
9. Select **Trusted Root Certification Authorities**, and then click **OK**.
10. Click **Next**.
11. Click **Finish**.
12. Click **Yes**, if the fingerprint (thumbprint) is correct.
13. Click **OK**.

The self-signed certificate is now installed on your computer, and SSL/TLS communication is available.

Related Information

- Create and Install a Self-signed Certificate

Import and Export the Self-signed Certificate on your Brother Machine

You can store the self-signed certificates on your Brother machine and manage them by importing and exporting.

- Import the Self-signed Certificate
- Export the Self-signed Certificate

Import the Self-signed Certificate

1. Start your web browser.
2. Type "https://machine's IP address" in your browser's address bar (where "machine's IP address" is the machine's IP address).

   For example:

   https://192.168.1.2

- If you are using a Domain Name System or enable a NetBIOS name, you can type another name, such as "SharedPrinter" instead of the IP address.
  - For example:

    https://SharedPrinter

  If you enable a NetBIOS name, you can also use the node name.
  - For example:

    https://brnxxxxxxxxxxxx

  The NetBIOS name can be found in the Network Configuration Report.
- For Mac, access Web Based Management by clicking the machine's icon on the **Status Monitor** screen.

3. If the machine prompts you for a password, type it, and then click .
4. Click the **Network** tab.
5. Click the **Security** tab.
6. Click the **Certificate** menu in the left navigation bar.
7. Click **Import Certificate and Private Key**.
8. Browse to the file you want to import.
9. Type the password if the file is encrypted, and then click **Submit**.

The self-signed certificate is imported to your machine.

To use SSL/TLS communication, the self-signed certificate must also be installed on your computer. Contact your network administrator.

Related Information

- Import and Export the Self-signed Certificate on your Brother Machine

Export the Self-signed Certificate

1. Start your web browser.
2. Type "https://machine's IP address" in your browser's address bar (where "machine's IP address" is the machine's IP address).

   For example:

   https://192.168.1.2

   - If you are using a Domain Name System or enable a NetBIOS name, you can type another name, such as "SharedPrinter" instead of the IP address.
     - For example:

       https://SharedPrinter

     If you enable a NetBIOS name, you can also use the node name.
     - For example:

       https://brnxxxxxxxxxxxx

     The NetBIOS name can be found in the Network Configuration Report.
   - For Mac, access Web Based Management by clicking the machine's icon on the **Status Monitor** screen.
3. If the machine prompts you for a password, type it, and then click .
4. Click the **Network** tab.
5. Click the **Security** tab.
6. Click the **Certificate** menu in the left navigation bar.
7. Click **Export** shown with **Certificate List**.
8. If you want to encrypt the file, type a password in the **Enter password** field.

   If the **Enter password** field is blank, your output file will not be encrypted.
9. Type the password again in the **Retype password** field, and then click **Submit**.
10. Click **Save**.
11. Specify the location where you want to save the file.

The self-signed certificate is exported to your computer.

You can also import the self-signed certificate to your computer.

Related Information

- Import and Export the Self-signed Certificate on your Brother Machine

Create and Install a Certificate from a Certificate Authority (CA)

If you already have a certificate from an external trusted CA, you can store the certificate and private key on the machine and manage them by importing and exporting. If you do not have a certificate from an external trusted CA, create a Certificate Signing Request (CSR), send it to a CA for authentication, and install the returned certificate on your machine.

- Create a Certificate Signing Request (CSR)
- Install a Certificate on Your Brother Machine
- Import and Export the Certificate and Private Key

Create a Certificate Signing Request (CSR)

A Certificate Signing Request (CSR) is a request sent to a Certificate Authority (CA) to authenticate the credentials contained within the certificate.

We recommend installing a Root Certificate from the CA on your computer before creating the CSR.

1. Start your web browser.
2. Type "https://machine's IP address" in your browser's address bar (where "machine's IP address" is the machine's IP address).

   For example:

   https://192.168.1.2

   - If you are using a Domain Name System or enable a NetBIOS name, you can type another name, such as "SharedPrinter" instead of the IP address.
     - For example:

       https://SharedPrinter

     If you enable a NetBIOS name, you can also use the node name.
     - For example:

       https://brnxxxxxxxxxxxx

     The NetBIOS name can be found in the Network Configuration Report.
   - For Mac, access Web Based Management by clicking the machine's icon on the **Status Monitor** screen.

3. If the machine prompts you for a password, type it, and then click .
4. Click the **Network** tab.
5. Click the **Security** tab.
6. Click the **Certificate** menu in the left navigation bar.
7. Click **Create CSR**.
8. Type a **Common Name** (required) and add other information about your **Organization** (optional).

   - Your company details are required so that a CA can confirm your identity and verify it to the outside world.
   - The length of the **Common Name** must be less than 64 bytes. Enter an identifier, such as an IP address, node name, or domain name to use when accessing this printer through SSL/TLS communication. The node name is displayed by default. The **Common Name** is required.
   - A warning will appear if you type a different name in the URL than the Common Name that was used for the certificate.
   - The length of the **Organization**, the **Organization Unit**, the **City/Locality** and the **State/Province** must be less than 64 bytes.
   - The **Country/Region** should be a two character ISO 3166 country code.
   - If you are configuring an X.509v3 certificate extension, select the **Configure extended partition** check box, and then select **Auto (Register IPv4)** or **Manual**.

9. Select your setting from the **Public Key Algorithm** drop-down list. The default setting is **RSA(2048bit)**.
10. Select your setting from the **Digest Algorithm** drop-down list. The default setting is **SHA256**.
11. Click **Submit**.

    The CSR appears on your screen. Save the CSR as a file or copy and paste it into an online CSR form offered by a Certificate Authority.

12. Click **Save**.

- Follow your CA's policy regarding the method to send a CSR to your CA.
- If you are using the Enterprise root CA of Windows Server 2008/2012/2012 R2/2016, we recommend using the Web Server for the certificate template to securely create the Client Certificate. If you are creating a Client Certificate for an IEEE 802.1x environment with EAP-TLS authentication, we recommend using User for the certificate template. For more detailed information, go to your model's **FAQs & Troubleshooting** page on the Brother support website at support.brother.com. Search for "SSL".

Related Information

- Create and Install a Certificate from a Certificate Authority (CA)

Install a Certificate on Your Brother Machine

When you receive a certificate from a CA, follow the steps below to install it into the print server:

> Only a certificate issued with your machine's CSR can be installed onto the machine. When you want to create another CSR, make sure that the certificate is installed before creating another CSR. Create another CSR only after installing the certificate on the machine. If you do not, the CSR you create before installing will be invalid.

1. Start your web browser.
2. Type "https://machine's IP address" in your browser's address bar (where "machine's IP address" is the machine's IP address).

   For example:

   https://192.168.1.2

   - If you are using a Domain Name System or enable a NetBIOS name, you can type another name, such as "SharedPrinter" instead of the IP address.
     - For example:

       https://SharedPrinter

     If you enable a NetBIOS name, you can also use the node name.
     - For example:

       https://brnxxxxxxxxxxxx

     The NetBIOS name can be found in the Network Configuration Report.
   - For Mac, access Web Based Management by clicking the machine's icon on the **Status Monitor** screen.
3. If the machine prompts you for a password, type it, and then click .
4. Click the **Network** tab.
5. Click the **Security** tab.
6. Click the **Certificate** menu in the left navigation bar.
7. Click **Install Certificate**.
8. Browse to the file that contains the certificate issued by the CA, and then click **Submit**.

   The certificate has been created successfully and saved in your machine's memory successfully.

To use SSL/TLS communication, the Root Certificate from the CA must be installed on your computer. Contact your network administrator.

Related Information

- Create and Install a Certificate from a Certificate Authority (CA)

Import and Export the Certificate and Private Key

Store the certificate and private key on your machine and manage them by importing and exporting them.

- Import a Certificate and Private Key
- Export the Certificate and Private Key

Import a Certificate and Private Key

1. Start your web browser.
2. Type "https://machine's IP address" in your browser's address bar (where "machine's IP address" is the machine's IP address).

   For example:

   https://192.168.1.2

- If you are using a Domain Name System or enable a NetBIOS name, you can type another name, such as "SharedPrinter" instead of the IP address.
  - For example:

    https://SharedPrinter

  If you enable a NetBIOS name, you can also use the node name.
  - For example:

    https://brnxxxxxxxxxxxx

  The NetBIOS name can be found in the Network Configuration Report.
- For Mac, access Web Based Management by clicking the machine's icon on the **Status Monitor** screen.

3. If the machine prompts you for a password, type it, and then click .
4. Click the **Network** tab.
5. Click the **Security** tab.
6. Click the **Certificate** menu in the left navigation bar.
7. Click **Import Certificate and Private Key**.
8. Browse to the file you want to import.
9. Type the password if the file is encrypted, and then click **Submit**.

The certificate and private key are imported to your machine.

To use SSL/TLS communication, the Root Certificate from the CA must also be installed on your computer. Contact your network administrator.

Related Information

- Import and Export the Certificate and Private Key

Export the Certificate and Private Key

1. Start your web browser.
2. Type "https://machine's IP address" in your browser's address bar (where "machine's IP address" is the machine's IP address).

   For example:

   https://192.168.1.2

   - If you are using a Domain Name System or enable a NetBIOS name, you can type another name, such as "SharedPrinter" instead of the IP address.
     - For example:

       https://SharedPrinter

     If you enable a NetBIOS name, you can also use the node name.
     - For example:

       https://brnxxxxxxxxxxxx

     The NetBIOS name can be found in the Network Configuration Report.
   - For Mac, access Web Based Management by clicking the machine's icon on the **Status Monitor** screen.

3. If the machine prompts you for a password, type it, and then click .
4. Click the **Network** tab.
5. Click the **Security** tab.
6. Click the **Certificate** menu in the left navigation bar.
7. Click **Export** shown with **Certificate List**.
8. Enter the password if you want to encrypt the file.

   If a blank password is used, the output is not encrypted.
9. Enter the password again for confirmation, and then click **Submit**.
10. Click **Save**.
11. Specify the location where you want to save the file.

The certificate and private key are exported to your computer.

You can also import the certificate to your computer.

Related Information

- Import and Export the Certificate and Private Key

Import and Export a CA Certificate

You can import, export and store CA certificates on your Brother machine.

- Import a CA Certificate
- Export a CA Certificate

Import a CA Certificate

1. Start your web browser.
2. Type "https://machine's IP address" in your browser's address bar (where "machine's IP address" is the machine's IP address).

   For example:

   https://192.168.1.2

   - If you are using a Domain Name System or enable a NetBIOS name, you can type another name, such as "SharedPrinter" instead of the IP address.
     - For example:

       https://SharedPrinter

     If you enable a NetBIOS name, you can also use the node name.
     - For example:

       https://brnxxxxxxxxxxxx

     The NetBIOS name can be found in the Network Configuration Report.
   - For Mac, access Web Based Management by clicking the machine's icon on the **Status Monitor** screen.
3. If the machine prompts you for a password, type it, and then click .
4. Click the **Network** tab.
5. Click the **Security** tab.
6. Click **CA Certificate**.
7. Click **Import CA Certificate**.
8. Browse to the file you want to import.
9. Click **Submit**.

Related Information

- Import and Export a CA Certificate

Export a CA Certificate

1. Start your web browser.
2. Type "https://machine's IP address" in your browser's address bar (where "machine's IP address" is the machine's IP address).

   For example:

   https://192.168.1.2

   - If you are using a Domain Name System or enable a NetBIOS name, you can type another name, such as "SharedPrinter" instead of the IP address.
     - For example:

       https://SharedPrinter

     If you enable a NetBIOS name, you can also use the node name.
     - For example:

       https://brnxxxxxxxxxxxx

     The NetBIOS name can be found in the Network Configuration Report.
   - For Mac, access Web Based Management by clicking the machine's icon on the **Status Monitor** screen.
3. If the machine prompts you for a password, type it, and then click .
4. Click the **Network** tab.
5. Click the **Security** tab.
6. Click **CA Certificate**.
7. Select the certificate you want to export and click **Export**.
8. Click **Submit**.
9. Click **Save**.
10. Specify where on your computer you want to save the exported certificate, and save it.

Related Information

- Import and Export a CA Certificate

Manage Multiple Certificates

The multiple certificate feature allows you to use Web Based Management to manage each certificate installed on your machine. In Web Based Management, navigate to the **Certificate** or **CA Certificate** screen to view certificate content, delete, or export your certificates.

	Maximum Number of Certificates Stored UP on Brother Machine
Self-signed Certificate or Certificate Issued by a CA	5
CA Certificate	5

We recommend storing one less certificate than allowed, reserving an empty spot in case of certificate expiration. When a certificate expires, import a new certificate into the reserved spot, and then delete the expired certificate. This ensures that you avoid configuration failure.

- When you use HTTPS/IPPS, IEEE 802.1x, or Signed PDF, you must select which certificate you are using.
- When you use SSL for SMTP communications, you do not have to choose the certificate. The necessary certificate will be chosen automatically.

Related Information

- Certificates and Web Based Management

Manage Your Network Machine Securely Using Web Based Management

To manage your network machine securely, you must use management utilities with security protocols.

We recommend using the HTTPS protocol for secure management. To use this protocol, HTTPS must be enabled on your machine.

- The HTTPS protocol is enabled by default.
- You can change the HTTPS protocol settings using the Web Based Management screen.

1. Start your web browser.
2. Type "https://Common Name" in your browser's address bar (where "Common Name" is the Common Name that you assigned to the certificate; this could be your IP address, node name, or domain name).
3. If the machine prompts you for a password, type it, and then click .
4. You can now access the machine using HTTPS.

- If you use the SNMPv3 protocol, follow the steps below.
- You can also change the SNMP settings by using BRAdmin Professional.

5. Click the **Network** tab.
6. Click **Protocol**.
7. Make sure the **SNMP** setting is enabled, and then click **Advanced Settings**.
8. Configure the SNMP settings.

   There are three options for **SNMP Mode of Operation**.

   - **SNMP v1/v2c read-write access**

     In this mode, the print server uses version 1 and version 2c of the SNMP protocol. You can use all Brother applications in this mode. However, it is not secure since it will not authenticate the user, and data will not be encrypted.
   - **SNMPv3 read-write access and v1/v2c read-only access**

     In this mode, the print server uses the read-write access of version 3 and the read-only access of version 1 and version 2c of the SNMP protocol.

When you use **SNMPv3 read-write access and v1/v2c read-only access** mode, some Brother applications (such as BRAdmin Light) that access the print server do not work correctly since they authorise the read-only access of version 1 and version 2c. If you want to use all applications, we recommend using **SNMP v1/v2c read-write access** mode.

   - **SNMPv3 read-write access**

     In this mode, the print server uses version 3 of the SNMP protocol. If you want to manage the print server securely, use this mode.

When you use **SNMPv3 read-write access** mode, note the following:

- You can use only BRAdmin Professional or Web Based Management to manage the print server.
- Except for BRAdmin Professional, all applications that use SNMPv1/v2c will be restricted. To allow the use of SNMPv1/v2c applications, use **SNMPv3 read-write access and v1/v2c read-only access** or **SNMP v1/v2c read-write access** mode.

9. Click **Submit**.

Related Information

- Manage Your Network Machine Securely Using SSL/TLS

Manage Your Network Machine Securely Using BRAdmin Professional (Windows)

To use BRAdmin Professional, you must:

- Use the latest version of BRAdmin Professional. Go to your model's **Downloads** page on the Brother Solutions Center at support.brother.com.
- Use Web Based Management with the HTTPS protocol if you use BRAdmin Professional and Web Based Management together.
- Use a different password in each group if you are managing a mixed group of older and newer print servers with BRAdmin Professional. This will ensure security is maintained on the newer print servers.

- "Older print servers" refer to NC-2000 series, NC-2100p, NC-3100h, NC-3100s, NC-4100h, NC-5100h, NC-5200h, NC-6100h, NC-6200h, NC-6300h, NC-6400h, NC-8000, NC-100h, NC-110h, NC-120w, NC-130h, NC-140w, NC-8100h, NC-9100h, NC-7100w, NC-7200w and NC-2200w.

Related Information

- Manage Your Network Machine Securely Using SSL/TLS

Print Documents Securely Using SSL/TLS

To print documents securely with IPP protocol, use the IPPS protocol.

1. Start your web browser.
2. Type "https://machine's IP address" in your browser's address bar (where "machine's IP address" is the machine's IP address).

   For example:

   https://192.168.1.2

- If you are using a Domain Name System or enable a NetBIOS name, you can type another name, such as "SharedPrinter" instead of the IP address.
  - For example:

    https://SharedPrinter

  If you enable a NetBIOS name, you can also use the node name.
  - For example:

    https://brnxxxxxxxxxxxx

  The NetBIOS name can be found in the Network Configuration Report.
- For Mac, access Web Based Management by clicking the machine's icon on the **Status Monitor** screen.

3. If the machine prompts you for a password, type it, and then click .
4. Click the **Network** tab.
5. Click **Protocol**. Make sure the **IPP** check box is selected.

If the **IPP** check box is not selected, select the **IPP** check box, and then click **Submit**.

Restart your machine to activate the configuration.

After the machine restarts, return to the machine's web page, click the **Network** tab, and then click **Protocol**.

6. Click **HTTP Server Settings**.
7. Select the **HTTPS(Port 443)** check box in the **IPP**, and then click **Submit**.
8. Restart your machine to activate the configuration.

Communication using IPPS cannot prevent unauthorised access to the print server.

Related Information

- Manage Your Network Machine Securely Using SSL/TLS

Send an Email Securely

- Configure Email Sending Using Web Based Management
- Send an Email with User Authentication
- Send an Email Securely Using SSL/TLS

Configure Email Sending Using Web Based Management

We recommend using Web Based Management to configure secured email sending with user authentication, or email sending using SSL/TLS.

1. Start your web browser.
2. Type "https://machine's IP address" in your browser's address bar (where "machine's IP address" is the machine's IP address).

   For example:

   https://192.168.1.2
3. If the machine prompts you for a password, type it, and then click .
4. Click the **Network** tab.
5. Click the **Protocol** menu in the left navigation bar.
6. In the **SMTP** field, click **Advanced Setting** and make sure the status of **SMTP** is **Enabled**.
7. Configure the **SMTP** settings.
   - Confirm that the email settings are correct after configuration by sending a test email.
   - If you do not know the SMTP server settings, contact your network administrator or Internet Service Provider (ISP).
8. When finished, click **Submit**.

   The **Test Send E-mail Configuration** dialog box appears.
9. Follow the instructions in the dialog box to test the current settings.

Related Information

- Send an Email Securely

Send an Email with User Authentication

Your Brother machine supports the SMTP-AUTH method to send email via an email server that requires user authentication. This method prevents unauthorised users from accessing the email server.

You can use the SMTP-AUTH method for email notification and email reports (available for certain models).

We recommend using Web Based Management to configure the SMTP authentication.

Email Server Settings

You must configure your machine's SMTP authentication method to match the method used by your email server. For details about your email server settings, contact your network administrator or Internet Service Provider (ISP).

To enable SMTP server authentication: in the Web Based Management **SMTP** screen, under **Server Authentication Method**, you must select **SMTP-AUTH**.

Related Information

- Send an Email Securely

Send an Email Securely Using SSL/TLS

Your Brother machine supports SSL/TLS communication methods. To use email server that is using SSL/TLS communication, you must configure following settings.

We recommend using Web Based Management to configure SSL/TLS.

Verify Server Certificate

Under **SSL/TLS**, if you choose **SSL** or **TLS**, the **Verify Server Certificate** check box will be selected automatically.

- Before you verify the server certificate, you must import the CA certificate issued by the CA that signed the server certificate. Contact your network administrator or your Internet Service Provider (ISP) to confirm if importing a CA certificate is necessary.
- If you do not need to verify the server certificate, clear the **Verify Server Certificate** check box.

Port Number

If you select **SSL**, or **TLS**, the **Port** value will be changed to match the protocol. To change the port number manually, type the port number after you select **SSL/TLS** settings.

You must configure your machine's communication method to match the method used by your email server. For details about your email server settings, contact your network administrator or your ISP.

In most cases, the secured webmail services require the following settings:

SMTP	**Port**	25
	Server Authentication Method	**SMTP-AUTH**
	SSL/TLS	**TLS**

Related Information

- Send an Email Securely

Use IEEE 802.1x Authentication for a Wired or a Wireless Network

- What Is IEEE 802.1x Authentication?
- Configure IEEE 802.1x Authentication for a Wired or a Wireless Network Using Web Based Management (Web Browser)
- IEEE 802.1x Authentication Methods

What Is IEEE 802.1x Authentication?

IEEE 802.1x is an IEEE standard for wired and wireless networks that limits access from unauthorised network devices. Your Brother machine (supplicant) sends an authentication request to a RADIUS server (Authentication server) through your access point or HUB. After your request has been verified by the RADIUS server, your machine can access the network.

Related Information

- Use IEEE 802.1x Authentication for a Wired or a Wireless Network

Configure IEEE 802.1x Authentication for a Wired or a Wireless Network Using Web Based Management (Web Browser)

- If you configure your machine using EAP-TLS authentication, you must install the client certificate issued by a CA before you start configuration. Contact your network administrator about the client certificate. If you have installed more than one certificate, we recommend writing down the certificate name you want to use.
- Before you verify the server certificate, you must import the CA certificate that has been issued by the CA that signed the server certificate. Contact your network administrator or your Internet Service Provider (ISP) to confirm whether a CA certificate import is necessary.

You can also configure IEEE 802.1x authentication using:

- BRAdmin Professional (Wired and wireless network)
- Wireless setup wizard from the control panel (Wireless network)
- Wireless setup wizard on the installation disc (Wireless network)

1. Start your web browser.
2. Type "https://machine's IP address" in your browser's address bar (where "machine's IP address" is the machine's IP address).

   For example:

   https://192.168.1.2

   - If you are using a Domain Name System or enable a NetBIOS name, you can type another name, such as "SharedPrinter" instead of the IP address.
     - For example:

       https://SharedPrinter

     If you enable a NetBIOS name, you can also use the node name.
     - For example:

       https://brnxxxxxxxxxxxx

     The NetBIOS name can be found in the Network Configuration Report.
   - For Mac, access Web Based Management by clicking the machine's icon on the **Status Monitor** screen.
3. If the machine prompts you for a password, type it, and then click .
4. Click the **Network** tab.
5. Do one of the following:

Option	Description
Wired network	Click the **Wired** tab, and then select **Wired 802.1x Authentication** in the left navigation bar.
Wireless network	Click the **Wireless** tab, and then select **Wireless (Enterprise)** in the left navigation bar.

6. Configure the IEEE 802.1x authentication settings.

- To enable IEEE 802.1x authentication for wired networks, select **Enabled** for **Wired 802.1x status** on the **Wired 802.1x Authentication** page.
- If you are using **EAP-TLS** authentication, you must select the client certificate that has been installed (shown with certificate name) for verification from the **Client Certificate** drop-down list.
- If you select **EAP-FAST**, **PEAP**, **EAP-TTLS**, or **EAP-TLS** authentication, select the verification method from the **Server Certificate Verification** drop-down list. Verify the server certificate using the CA certificate, imported to the machine in advance, that has been issued by the CA that signed the server certificate.

Select one of the following verification methods from the **Server Certificate Verification** drop-down list:

Option	Description
No Verification	The server certificate can always be trusted. The verification is not performed.
CA Cert.	The verification method to check the CA reliability of the server certificate, using the CA certificate that has been issued by the CA that signed the server certificate.
CA Cert. + ServerID	The verification method to check the common name [1] value of the server certificate, in addition to the CA reliability of the server certificate.

7. When finished with configuration, click **Submit**.

   For wired networks: After configuring, connect your machine to the IEEE 802.1x supported network. After a few minutes, print the Network Configuration Report to check the <**Wired IEEE 802.1x**> Status.

Option	Description
Success	The wired IEEE 802.1x function is enabled and the authentication was successful.
Failed	The wired IEEE 802.1x function is enabled; however, the authentication failed.
Off	The wired IEEE 802.1x function is not available.

Related Information

- Use IEEE 802.1x Authentication for a Wired or a Wireless Network

1 The common name verification compares the common name of the server certificate to the character string configured for the **Server ID**. Before you use this method, contact your system administrator about the server certificate's common name and then configure **Server ID**.

IEEE 802.1x Authentication Methods

LEAP (Wireless network)

Lightweight Extensible Authentication Protocol (LEAP) is a proprietary EAP method developed by Cisco Systems, Inc., which uses a user ID and password for authentication.

EAP-FAST

Extensible Authentication Protocol-Flexible Authentication via Secured Tunneling (EAP-FAST) has been developed by Cisco Systems, Inc., which uses a user ID and password for authentication, and symmetric key algorithms to achieve a tunnelled authentication process.

The Brother machine supports the following inner authentication methods:

- EAP-FAST/NONE
- EAP-FAST/MS-CHAPv2
- EAP-FAST/GTC

EAP-MD5 (Wired network)

Extensible Authentication Protocol-Message Digest Algorithm 5 (EAP-MD5) uses a user ID and password for challenge-response authentication.

PEAP

Protected Extensible Authentication Protocol (PEAP) is a version of EAP method developed by Cisco Systems, Inc., Microsoft Corporation and RSA Security. PEAP creates an encrypted Secure Sockets Layer (SSL)/Transport Layer Security (TLS) tunnel between a client and an authentication server, for sending a user ID and password. PEAP provides mutual authentication between the server and the client.

The Brother machine supports the following inner authentications:

- PEAP/MS-CHAPv2
- PEAP/GTC

EAP-TTLS

Extensible Authentication Protocol-Tunneled Transport Layer Security (EAP-TTLS) has been developed by Funk Software and Certicom. EAP-TTLS creates a similar encrypted SSL tunnel to PEAP, between a client and an authentication server, for sending a user ID and password. EAP-TTLS provides mutual authentication between the server and the client.

The Brother machine supports the following inner authentications:

- EAP-TTLS/CHAP
- EAP-TTLS/MS-CHAP
- EAP-TTLS/MS-CHAPv2
- EAP-TTLS/PAP

EAP-TLS

Extensible Authentication Protocol-Transport Layer Security (EAP-TLS) requires digital certificate authentication both at a client and an authentication server.

Related Information

- Use IEEE 802.1x Authentication for a Wired or a Wireless Network

Store Print Log to Network

- Store Log to Network Overview
- Configure the Store Print Log to Network Settings Using Web Based Management
- Use the Store Print Log to Network's Error Detection Setting
- Use Store Print Log to Network with Secure Function Lock 3.0

Store Log to Network Overview

The Store Print Log to Network feature allows you to save the print log file from your Brother machine to a network server using the Common Internet File System (CIFS) protocol. You can record the ID, type of print job, job name, user name, date, time and the number of printed pages for every print job. CIFS is a protocol that runs over TCP/IP, allowing computers on a network to share files over an intranet or the Internet.

The following print functions are recorded in the print log:

- Print jobs from your computer
- USB Direct Print
- Copy
- Received Fax (supported models only)
- Web Connect Print (supported models only)

- The Store Print Log to Network feature supports Kerberos authentication and NTLMv2 authentication. You must configure the SNTP protocol (network time server), or you must set the date, time and time zone correctly on the control panel for authentication.
- You can set the file type to TXT or CSV when storing a file to the server.

Related Information

- Store Print Log to Network

Configure the Store Print Log to Network Settings Using Web Based Management

1. Start your web browser.
2. Type "https://machine's IP address" in your browser's address bar (where "machine's IP address" is the machine's IP address).

   For example:

   https://192.168.1.2
3. If the machine prompts you for a password, type it, and then click .
4. Click the **Administrator** tab.
5. Click the **Store Print Log to Network** menu.
6. In the **Print Log** field, click **On**.
7. Configure the following settings:

Option	Description
Network Folder Path	Type the destination folder where your log will be stored on the CIFS server (i.e., \\ComputerName\SharedFolder).
File Name	Type the file name you want to use for the print log (up to 32 characters).
File Type	Select the **TXT** or **CSV** option for the Print Log file type.
Auth. Method	Select the authentication method required for access to the CIFS server: **Auto**, **Kerberos**, or **NTLMv2**. Kerberos is an authentication protocol which allows devices or individuals to securely prove their identity to network servers using a single sign-on. NTLMv2 is the authentication method used by Windows to log into servers. • **Auto**: If you select **Auto**, NTLMv2 will be used to the authentication method. • **Kerberos**: Select the **Kerberos** option to use Kerberos authentication only. • **NTLMv2**: Select the **NTLMv2** option to use NTLMv2 authentication only. • For the **Kerberos** and **NTLMv2** authentication, you must also configure the **Date&Time** settings or the SNTP protocol (network time server) and DNS server. • You can also configure the `Date & Time` settings from the machine's control panel.
Username	Type the user name for the authentication (up to 96 characters). If the user name is part of a domain, enter the user name in one of the following styles: user@domain or domain\user.
Password	Type the password for the authentication (up to 32 characters).
Kerberos Server Address (if needed)	Type the KDC host address (for example: kerberos.example.com; up to 64 characters) or the IP address (for example: 192.168.56.189).
Error Detection Setting	Choose what action should be taken when the Print Log cannot be stored to the server due to a network error.

8. In the **Connection Status** field, confirm the last log status.

You can also confirm the error status on the LCD of your machine.

9. Click **Submit** to display the **Test Print Log to Network** page.
   To test your settings, click **Yes** and then go to the next step.
   To skip the test, click **No**. Your settings will be submitted automatically.
10. The machine will test your settings.
11. If your settings are accepted, **Test OK** appears on the screen.
    If **Test Error** appears, check all settings, and then click **Submit** to display the Test page again.

Related Information

- Store Print Log to Network

Use the Store Print Log to Network's Error Detection Setting

Use Error Detection Settings to determine the action that is taken when the print log cannot be stored to the server due to a network error.

1. Start your web browser.
2. Type "https://machine's IP address" in your browser's address bar (where "machine's IP address" is the machine's IP address).

   For example:

   https://192.168.1.2
3. If the machine prompts you for a password, type it, and then click .
4. Click the **Administrator** tab.
5. Click the **Store Print Log to Network** menu in the left navigation bar.
6. In the **Error Detection Setting** section, select the **Cancel Print** or **Ignore Log & Print** option.

Option	Description
Cancel Print	If you select the **Cancel Print** option, the print jobs are cancelled when the print log cannot be stored to the server. Even if you select the **Cancel Print** option, your machine will print a received fax.

Ignore Log & Print	If you select the **Ignore Log & Print** option, the machine prints the documentation even if the print log cannot be stored to the server.
	When the store print log function has recovered, the print log is recorded as follows:
	`Id, Type, Job Name, User Name, Date, Time, Print Pages, Color Pages`
	`1, Print(xxxxxxx), "Document01.doc", "user01", 03/03/20xx, 14:01:32, 52, 21`
	`2, Print(xxxxxxx), "Document02.doc", "user01", 03/03/20xx, 14:45:30, ?, ?` — a
	`3, <Error>, ?, ?, ?, ?, ?, ?` — b
	`4, Print(xxxxxxx), "Report01.xls", "user02", 03/03/20xx, 19:30:40, 4, 4`
	a. If the log cannot be stored at the end of printing, the print log except the number of printed pages will be recorded.
	b. If the print log cannot be stored at the beginning and the end of printing, the print log of the job will not be recorded. When the function has recovered, the error is reflected in the log.

7. Click **Submit** to display the **Test Print Log to Network** page.

   To test your settings, click **Yes** and then go to the next step.

   To skip the test, click **No**. Your settings will be submitted automatically.
8. The machine will test your settings.
9. If your settings are accepted, **Test OK** appears on the screen.

   If **Test Error** appears, check all settings, and then click **Submit** to display the Test page again.

Related Information

- Store Print Log to Network

Use Store Print Log to Network with Secure Function Lock 3.0

When Secure Function Lock 3.0 is active, the names of the registered users for copy, Fax RX, Web Connect Print and USB Direct Print (if available) are recorded in the Store Print Log to Network report.

```
Id, Type, Job Name, User Name, Date, Time, Print Pages, Color Pages
1, Copy, -, -, 04/04/20xx, 09:05:12, 3, 3
2, Fax, -, -, 04/04/20xx, 09:45:30, 5, 0
3, Copy, -, "BOB", 04/04/20xx, 10:20:30, 4, 0
4, Fax, -, "BOB", 04/04/20xx, 10:35:12, 3, 0
5, USB Direct, -, "JOHN", 04/04/20xx, 11:15:43, 6, 6
```

Related Information

- Store Print Log to Network

Mobile/Web Connect

- Brother Web Connect
- Google Cloud Print
- AirPrint
- Mobile Printing for Windows
- Mopria® Print Service
- Brother iPrint&Scan for Mobile Devices
- Near-Field Communication (NFC)

Brother Web Connect

Related Models: MFC-L3710CW/MFC-L3735CDN/MFC-L3745CDW/MFC-L3750CDW/MFC-L3770CDW

- Brother Web Connect Overview
- Online Services Used with Brother Web Connect
- Conditions for Using Brother Web Connect
- Set Up Brother Web Connect
- Scan and Upload Documents Using Brother Web Connect
- Download and Print Documents Using Brother Web Connect
- FaxForward to Cloud or E-mail

Brother Web Connect Overview

Related Models: MFC-L3710CW/MFC-L3735CDN/MFC-L3745CDW/MFC-L3750CDW/MFC-L3770CDW

Certain websites provide services that allow users to upload and view images and files on the websites. Your Brother machine can scan images and upload them to these services, and also download and print images that are already uploaded to these services.

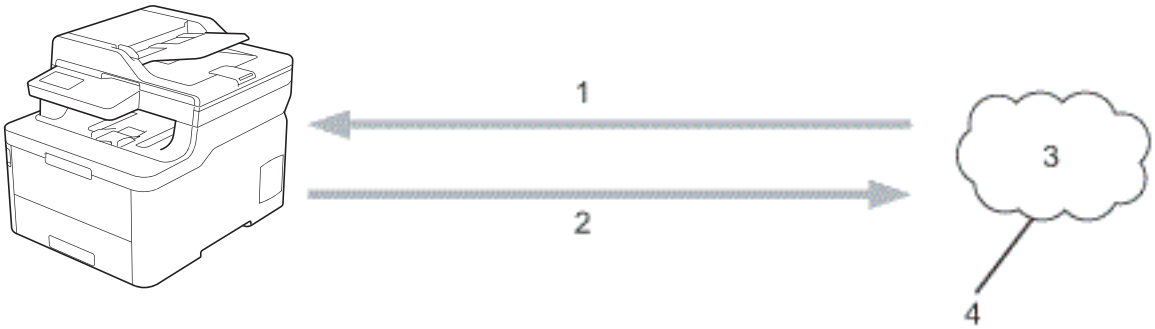

1. Printing
2. Scanning
3. Photos, images, documents and other files
4. Web Service

To use Brother Web Connect, your Brother machine must be connected to a network that has access to the Internet, through either a wired or wireless connection.

For network setups that use a proxy server, the machine must also be configured to use a proxy server. If you are unsure of your network configuration, check with your network administrator.

A proxy server is a computer that serves as an intermediary between computers without a direct Internet connection, and the Internet.

Related Information

- Brother Web Connect

Online Services Used with Brother Web Connect

Related Models: MFC-L3710CW/MFC-L3735CDN/MFC-L3745CDW/MFC-L3750CDW/MFC-L3770CDW

Use Brother Web Connect to access services from your Brother machine:

To use Brother Web Connect, you must have an account with the online service you want to use. If you do not already have an account, use a computer to access the service's website and create an account.

You do not need to create an account to use Brother Creative Center.

Google Drive™

An online document storage, editing, sharing and file synchronization service.

URL: drive.google.com

Evernote®

An online file storage and management service.

URL: www.evernote.com

Dropbox

An online file storage, sharing and synchronization service.

URL: www.dropbox.com

OneDrive

An online file storage, sharing and managing service.

URL: onedrive.live.com

Box

An online document editing and sharing service.

URL: www.box.com

OneNote

An online document editing and sharing service.

URL: www.onenote.com

Brother Creative Center

A website that offers various templates, such as greeting cards, brochures and calendars that you can print on your Brother machine (available only for certain countries).

www.brother.com/creativecenter

For more information about any of these services, refer to the respective service's website.

The following table describes which file types can be used with each Brother Web Connect feature:

Accessible Services	Google Drive™ Evernote® Dropbox OneDrive Box OneNote	Brother Creative Center
Download and print images	JPEG PDF DOCX XLSX PPTX [1]	(Print only)

Accessible Services	Google Drive™ Evernote® Dropbox OneDrive Box OneNote	Brother Creative Center
Upload scanned images	JPEG PDF [2] DOCX XLSX PPTX TIFF XPS	-
FaxForward to the online services (available only for certain models)	JPEG PDF TIFF	-

1 DOC/XLS/PPT formats are also available for downloading and printing images.

2 For upload scanned images, PDF includes Searchable PDF, Signed PDF, Secure PDF and PDF/A.

(For Hong Kong, Taiwan and Korea)

Brother Web Connect supports only file names written in English. Files named in the local language will not be downloaded.

Related Information

- Brother Web Connect

Conditions for Using Brother Web Connect

Related Models: MFC-L3710CW/MFC-L3735CDN/MFC-L3745CDW/MFC-L3750CDW/MFC-L3770CDW

- Brother Software Installation for Using Brother Web Connect
- Configure the Proxy Server Settings Using Your Brother Machine's Control Panel
- Configure the Proxy Server Settings Using Web Based Management

Brother Software Installation for Using Brother Web Connect

Related Models: MFC-L3710CW/MFC-L3735CDN/MFC-L3745CDW/MFC-L3750CDW/MFC-L3770CDW

The initial installation of Brother Web Connect requires a computer that has access to the Internet and has the Brother machine's software installed.

Windows

To install the Brother software and connect your machine to a wireless or wired network, see the *Quick Setup Guide*.

Mac

To install the **Full Driver & Software Package**, go to your model's **Downloads** page on the Brother Solutions Center at support.brother.com.

Related Information

- Conditions for Using Brother Web Connect

Configure the Proxy Server Settings Using Your Brother Machine's Control Panel

Related Models: MFC-L3710CW/MFC-L3735CDN/MFC-L3745CDW/MFC-L3750CDW/MFC-L3770CDW

If your network uses a proxy server, the following proxy server information must be configured on the machine:

- Proxy server address
- Port number
- User Name
- Password

1. Press [Settings] > [All Settings] > [Network] > [Web Connect Settings] > [Proxy Settings] > [Proxy Connection] > [On].
2. Press the option that you want to set, and then enter the proxy server information.
3. Press .

Related Information

- Conditions for Using Brother Web Connect

Configure the Proxy Server Settings Using Web Based Management

Related Models: MFC-L3710CW/MFC-L3735CDN/MFC-L3745CDW/MFC-L3750CDW/MFC-L3770CDW

If your network uses a proxy server, the following proxy server information must be configured using Web Based Management:

- Proxy server address
- Port number
- User Name
- Password

We recommend Microsoft Internet Explorer 11/Microsoft Edge for Windows and Safari 10/11 for Mac. Make sure that JavaScript and Cookies are always enabled in whichever browser you use.

1. Start your web browser.
2. Type "https://machine's IP address" in your browser's address bar (where "machine's IP address" is the machine's IP address).

   For example:

   https://192.168.1.2
3. If the machine prompts you for a password, type it, and then click .
4. Click the **Network** tab.
5. Click the **Protocol** menu in the left navigation bar.
6. Make sure the **Proxy** check box is selected, and then click **Submit**.
7. In the **Proxy** field, click **Advanced Settings**.
8. Enter the proxy server information.
9. Click **Submit**.

Related Information

- Conditions for Using Brother Web Connect

Set Up Brother Web Connect

Related Models: MFC-L3710CW/MFC-L3735CDN/MFC-L3745CDW/MFC-L3750CDW/MFC-L3770CDW

- Brother Web Connect Setup Overview
- Create an Account for Each Online Service Before Using Brother Web Connect
- Apply for Brother Web Connect Access
- Register an Account on Your Brother Machine for Brother Web Connect
- Set Up Brother Web Connect for Brother CreativeCenter

Brother Web Connect Setup Overview

Related Models: MFC-L3710CW/MFC-L3735CDN/MFC-L3745CDW/MFC-L3750CDW/MFC-L3770CDW

Configure the Brother Web Connect settings using the following procedure (when using Brother CreativeCenter, this procedure is not necessary):

Step 1: Create an account with the service you want to use.

Access the service's website using a computer and create an account. (If you already have an account, there is no need to create an additional account.)

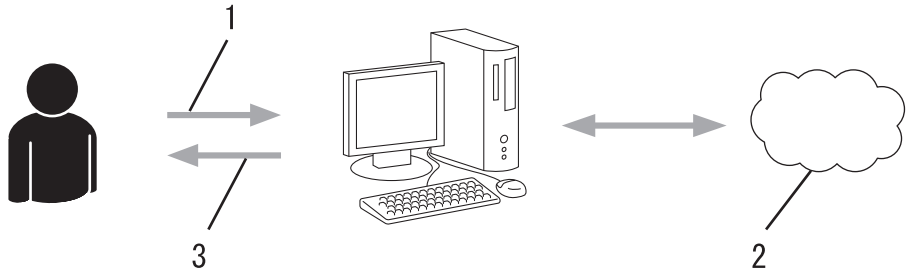

1. User registration
2. Web Service
3. Obtain account

Step 2: Apply for Brother Web Connect access.

Start Brother Web Connect access using a computer and obtain a temporary ID.

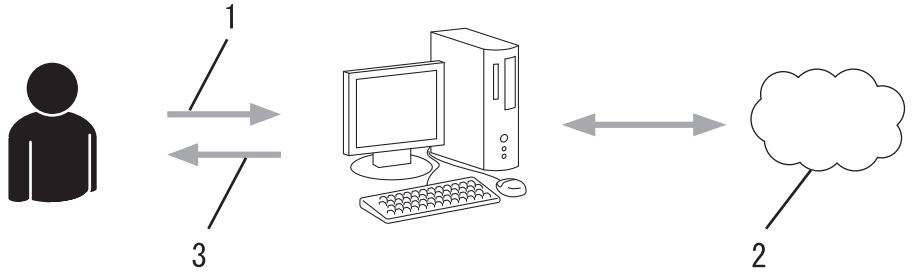

1. Enter account information
2. Brother Web Connect application page
3. Obtain temporary ID

Step 3: Register your account information on your machine so you can access the service you want to use.

Enter the temporary ID to enable the service on your machine. Specify the account name as you would like it to be displayed on the machine, and enter a PIN if you would like to use one.

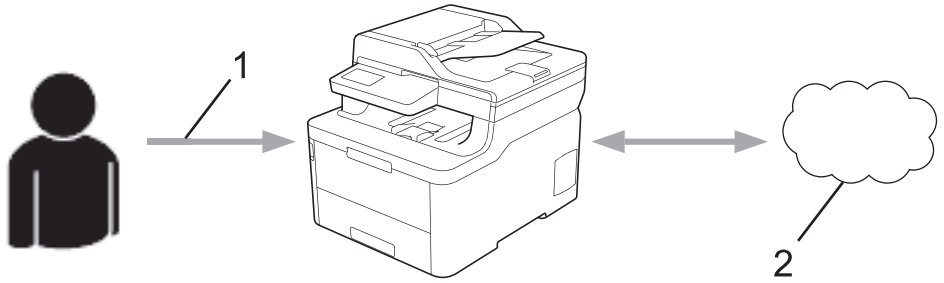

1. Enter temporary ID

2. Web Service

Your Brother machine can now use the service.

Related Information

- Set Up Brother Web Connect

Create an Account for Each Online Service Before Using Brother Web Connect

Related Models: MFC-L3710CW/MFC-L3735CDN/MFC-L3745CDW/MFC-L3750CDW/MFC-L3770CDW

To use Brother Web Connect to access an online service, you must have an account with that online service. If you do not already have an account, use a computer to access the service's website and create an account. After creating an account, log on and use the account once with a computer before using the Brother Web Connect feature. Otherwise, you may not be able to access the service using Brother Web Connect.

If you already have an account, there is no need to create an additional account.

After you finish creating an account with the online service you want to use, apply for Brother Web Connect access.

You do not need to create an account if you use the service as a guest. You can use only certain services as a guest. If the service you want to use does not have a guest-user option, you must create an account.

Related Information

- Set Up Brother Web Connect

Apply for Brother Web Connect Access

Related Models: MFC-L3710CW/MFC-L3735CDN/MFC-L3745CDW/MFC-L3750CDW/MFC-L3770CDW

To use Brother Web Connect to access online services, you must first apply for Brother Web Connect access using a computer that has the Brother Software installed.

1. Access the Brother Web Connect application website:

Option	Description
Windows 7	Click **(Start)** > **All Programs** > **Brother** > **Brother Utilities**, and then click the drop-down list and select your model name (if not already selected). Click **Do More** in the left navigation bar, and then click **Brother Web Connect**.
Windows 8 Windows 10	Launch (**Brother Utilities**), and then click the drop-down list and select your model name (if not already selected). Click **Do More** in the left navigation bar, and then click **Brother Web Connect**.
Windows 8.1	Move your mouse to the lower left corner of the **Start** screen and click (if you are using a touch-based device, swipe up from the bottom of the **Start** screen to bring up the **Apps** screen). Click (**Brother Utilities**), and then click the drop-down list and select your model name (if not already selected). Click **Do More** in the left navigation bar, and then click **Brother Web Connect**.
Mac	Click **Go** in the **Finder** bar, **Applications** > **Brother** > **Utilities** > **Brother Web Connect**.

You can also access the website directly:
Type bwc.brother.com into your web browser's address bar.

The Brother Web Connect page launches.

2. Select the service you want to use.

The actual screen may differ from the screen shown above.

3. Follow the on-screen instructions and apply for access.
When finished, your temporary ID will appear.

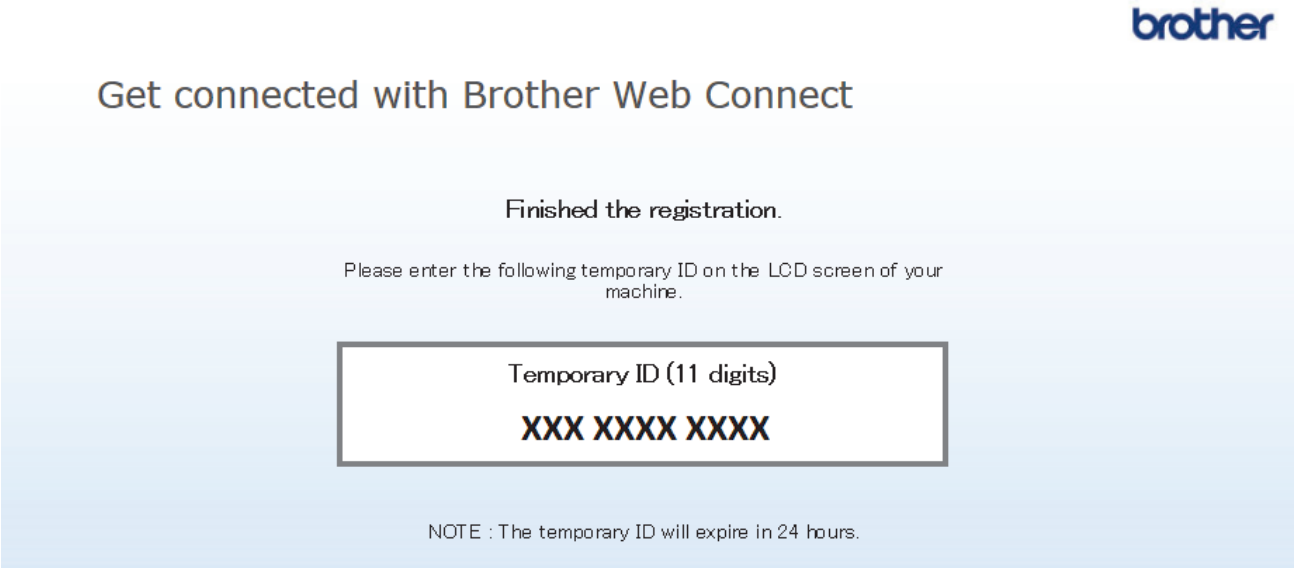

4. Make a note of your temporary ID, as you will need it to register accounts to the machine. The temporary ID is valid for 24 hours.
5. Close the web browser.

Now that you have a Brother Web Connect access ID, you must register this ID on your machine, and then use your machine to access the web service you want to use.

Related Information

- Set Up Brother Web Connect

Related Topics:

- Register an Account on Your Brother Machine for Brother Web Connect

Register an Account on Your Brother Machine for Brother Web Connect

Related Models: MFC-L3710CW/MFC-L3735CDN/MFC-L3745CDW/MFC-L3750CDW/MFC-L3770CDW

You must enter your Brother Web Connect account information and configure your machine so that it can use Brother Web Connect to access the service you want.

- You must apply for Brother Web Connect access to register an account on your machine.
- Before you register an account, confirm that the correct date and time are set on the machine.

1. Swipe to display the [Web] option.
2. Press [Web].

- If information regarding the Internet connection appears on the machine's LCD, read the information and press [OK]. If you want to display this information again, press [Yes].
- Occasionally, updates or announcements about Brother Web Connect's features will appear on the LCD. Read the information, and then press [OK].

3. If the information regarding licence agreement appears, make your selection and follow the on-screen instructions.
4. Select the service with which you want to register.
5. Press the service name.
6. If information regarding Brother Web Connect appears, press [OK].
7. Press [Register/Delete Account].
8. Press [Register Account].

   The machine will prompt you to enter the temporary ID you received when you applied for Brother Web Connect access.
9. Press [OK].
10. Enter the temporary ID using the LCD.
11. Press [OK].

An error message will appear on the LCD if the information you entered does not match the temporary ID you received when you applied for access, or if the temporary ID has expired. Enter the temporary ID correctly, or apply for access again to receive a new temporary ID.

The machine will prompt you to enter the account name that you want to be displayed on the LCD.

12. Press [OK].
13. Enter the name using the LCD.
14. Press [OK].
15. Do one of the following:
    - To set a PIN for the account, press [Yes]. (A PIN prevents unauthorised access to the account.) Enter a four-digit number, and then press [OK].
    - If you do not want to set a PIN, press [No].
16. When the account information you entered appears, confirm that it is correct.
17. Press [Yes] to register your information as entered.
18. Press [OK].
19. Press .

Registration is complete and your machine can now access the service.

Related Information

- Set Up Brother Web Connect

Related Topics:

- Apply for Brother Web Connect Access

Set Up Brother Web Connect for Brother CreativeCenter

Related Models: MFC-L3710CW/MFC-L3735CDN/MFC-L3745CDW/MFC-L3750CDW/MFC-L3770CDW

Brother Web Connect is set up to work with Brother CreativeCenter automatically. No configuration is needed to create the calendars, business cards, posters and greeting cards available at www.brother.com/creativecenter.

Brother CreativeCenter is not available in all countries.

Related Information

- Set Up Brother Web Connect

Scan and Upload Documents Using Brother Web Connect

Related Models: MFC-L3710CW/MFC-L3735CDN/MFC-L3745CDW/MFC-L3750CDW/MFC-L3770CDW

Upload your scanned photos and documents directly to a web service without using a computer.

- When scanning and uploading JPEG files, monochrome scanning is not available.
- When scanning and uploading searchable PDF or Microsoft Office files, monochrome and grey scanning is not available.
- When scanning and uploading JPEG files, each page is uploaded as a separate file.
- Uploaded documents are saved in an album named **From_BrotherDevice**.

For information regarding restrictions, such as the size or number of documents that can be uploaded, refer to the respective service's website.

If you are a restricted Web Connect user due to the Secure Function Lock feature (available for certain models), you cannot upload the scanned data.

1. Load your document.
2. Swipe to display the [Web] option.
3. Press [Web].

- You can also press [Scan] > [to Web].
- If information regarding the Internet connection appears on the machine's LCD, read the information and press [OK]. If you want to display this information again, press [Yes].
- Occasionally, updates or announcements about Brother Web Connect's features will appear on the LCD. Read the information, and then press [OK].

4. Select the service that hosts the account to which you want to upload.
5. Select your account name.
6. Follow the on-screen instructions to complete this operation.

Related Information

- Brother Web Connect

Download and Print Documents Using Brother Web Connect

Related Models: MFC-L3710CW/MFC-L3735CDN/MFC-L3745CDW/MFC-L3750CDW/MFC-L3770CDW

Documents that have been uploaded to your account can be downloaded directly to your machine and printed. Documents that other users have uploaded to their own accounts for sharing can also be downloaded to your machine and printed, as long as you have viewing privileges for those documents. Certain services allow guest users to view documents that are public. When accessing a service or an account as a guest user, you can view documents that the owner has made public, that is, documents with no viewing restrictions.

To download other users' documents, you must have access privileges to view the corresponding albums or documents.

If you are a restricted user for Web Connect due to the Secure Function Lock feature (available for certain models), you cannot download the data.

The Secure Function Lock Page Limit feature applies to the print job using Web Connect.

For Hong Kong, Taiwan and Korea

Brother Web Connect supports only file names written in English. Files named in the local language will not be downloaded.

Related Information

- Brother Web Connect
  - Download and Print Using Web Services
  - Download and Print Brother CreativeCenter Templates

Download and Print Using Web Services

Related Models: MFC-L3710CW/MFC-L3735CDN/MFC-L3745CDW/MFC-L3750CDW/MFC-L3770CDW

For information on Brother CreativeCenter Templates, see *Related Information*.

1. Swipe to display the [Web] option.
2. Press [Web].

- If information regarding the Internet connection appears on the machine's LCD, read the information and press [OK]. If you want to display this information again, press [Yes].
- Occasionally, updates or announcements about Brother Web Connect's features will appear on the LCD. Read the information, and then press [OK].

3. Select the service that hosts the document you want to download and print.
4. Select your account name. If the PIN entry screen appears, enter the four-digit PIN and press [OK].

- To access the service as a guest user, select [Use Service as a Guest User]. When the information regarding access as a guest user appears, press [OK]. Type the account name of the user whose documents you want to download, and then press [OK].
- Depending on the service, you may have to select the account name from a list.

5. Press [Download to Print].
6. Select the album you want. Some services do not require documents to be saved in albums. For documents not saved in albums, select [Show Unsorted Photos] or [Show Unsorted Files] to select documents. Other users' documents cannot be downloaded if they are not saved in an album.

An album is a collection of images. The actual term may differ depending on the service you use. When using Evernote®, you must select the notebook, and then select the note.

7. Select the thumbnail of the document you want to print. Confirm the document on the LCD and then press [OK]. Select additional documents to print (you can select up to 10 documents).
8. When finished, press [OK].
9. Follow the on-screen instructions to complete this operation.

Related Information

- Download and Print Documents Using Brother Web Connect

Related Topics:

- Download and Print Brother CreativeCenter Templates

Download and Print Brother CreativeCenter Templates

Related Models: MFC-L3710CW/MFC-L3735CDN/MFC-L3745CDW/MFC-L3750CDW/MFC-L3770CDW

Brother CreativeCenter is not available in all countries.

1. Swipe to display the [Apps] option.
2. Press [Apps].

- If information regarding the Internet connection appears on the machine's LCD, read the information and press [OK]. If you want to display this information again, press [Yes].
- Occasionally, updates or announcements about Brother Web Connect's features will appear on the LCD. Read the information, and then press [OK].

3. Press [Print "CreativeCenter" Templates].
4. Select the category you want.
5. Select the category you want again.
6. Select the file you want. Enter the number of copies you want to print and then press [OK]. Repeat this step until you have chosen all the files that you want to print.
7. After you have selected all of the files you want to print, press [OK].

If information regarding the recommended print settings appears on the machine's LCD, read the information and press [OK]. If you want to display this information again, press [Yes].

8. Follow the on-screen instructions to complete this operation.

Related Information

- Download and Print Documents Using Brother Web Connect

Related Topics:

- Download and Print Using Web Services

FaxForward to Cloud or E-mail

Related Models: MFC-L3710CW/MFC-L3735CDN/MFC-L3745CDW/MFC-L3750CDW/MFC-L3770CDW

- Use the FaxForward to Cloud feature to automatically forward incoming faxes to your accounts with the available online services.

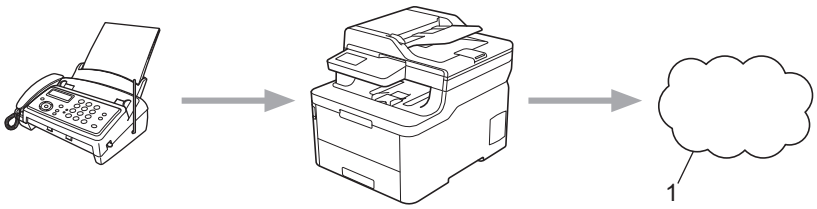

1. Web Service

- Use the FaxForward to E-mail feature to automatically forward incoming faxes to an inbox as email attachments.

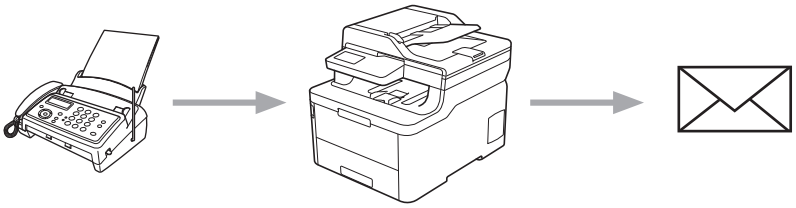

Related Information

- Brother Web Connect
  - Turn On FaxForward to Cloud or E-mail
  - Turn Off FaxForward to Cloud or E-mail

Turn On FaxForward to Cloud or E-mail

Related Models: MFC-L3710CW/MFC-L3735CDN/MFC-L3745CDW/MFC-L3750CDW/MFC-L3770CDW

Turn on the FaxForward feature to automatically forward incoming faxes to either an online service or an inbox as email attachments.

- If you are a restricted Web Connect user due to the Secure Function Lock feature (available for certain models), you cannot upload the incoming faxes.
- This feature is available only for monochrome faxes.
- If you turn on the FaxForward to Cloud feature, you cannot use the following features:
  - [Fax Forward]
  - [Fax Storage]
  - [PC Fax Receive]

1. Swipe to display the [Apps] option.
2. Press [Apps].

- If information regarding the Internet connection appears on the machine's LCD, read the information and press [OK]. If you want to display this information again, press [Yes].
- Occasionally, updates or announcements about Brother Web Connect's features will appear on the LCD. Read the information, and then press [OK].

3. Select [FaxForward to Cloud/E-mail].

If information regarding [FaxForward to Cloud/E-mail] appears, read it, and then press [OK].

4. Press [On].
5. Press [Forward to Cloud] or [Forward to E-mail].
   - If you selected [Forward to Cloud], choose the online service you want to receive the faxes, and then specify your account name.
   - If you selected [Forward to E-mail], enter the email address you want to receive the faxes as email attachments.
6. Follow the on-screen instructions to complete this operation.

Related Information

- FaxForward to Cloud or E-mail

Turn Off FaxForward to Cloud or E-mail

Related Models: MFC-L3710CW/MFC-L3735CDN/MFC-L3745CDW/MFC-L3750CDW/MFC-L3770CDW

Turn off FaxForward when you want to stop incoming faxes from automatically going to either an online service or an inbox as email attachments.

If there are received faxes still in your machine's memory, you cannot turn off the FaxForward to Cloud feature.

1. Swipe to display the [Apps] option.
2. Press [Apps].

- If information regarding the Internet connection appears on the machine's LCD, read the information and press [OK]. If you want to display this information again, press [Yes].
- Occasionally, updates or announcements about Brother Web Connect's features will appear on the LCD. Read the information, and then press [OK].

3. Select [FaxForward to Cloud/E-mail].

If information regarding [FaxForward to Cloud/E-mail] appears, read it, and then press [OK].

4. Press [Off].
5. Press [OK].

Related Information

- FaxForward to Cloud or E-mail

Google Cloud Print

- Google Cloud Print Overview
- Before Using Google Cloud Print
- Print from Google Chrome™ or Chrome OS™
- Print from Google Drive™ for Mobile
- Print from Gmail™ Webmail Service for Mobile

Google Cloud Print Overview

Google Cloud Print™ is a Google service that allows you to print to a printer registered to your Google account using a network-compatible device (such as a mobile phone or computer) without installing the printer driver on the device.

Printing from Android™ apps requires installing the Google Cloud Print™ app from the Google Play™ Store.

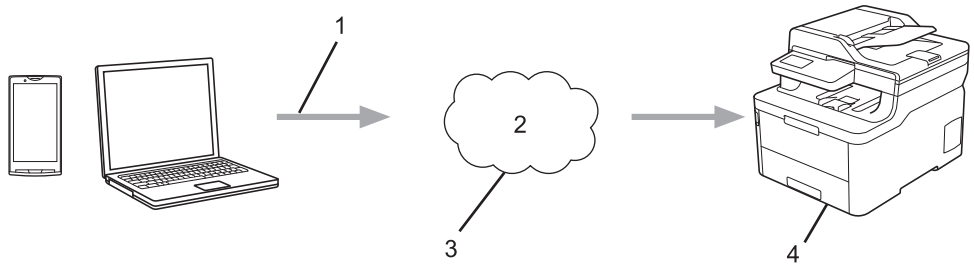

1. Print request
2. Internet
3. Google Cloud Print™
4. Printing

Related Information

- Google Cloud Print

Before Using Google Cloud Print

- Network Settings for Using Google Cloud Print
- Register Your Machine with Google Cloud Print Using Google Chrome™
- Register Your Machine with Google Cloud Print Using Web Based Management

Network Settings for Using Google Cloud Print

In order to use Google Cloud Print™, your Brother machine must be connected to a network that has access to the Internet, either through a wired or wireless connection. To connect and configure your machine correctly, see the *Quick Setup Guide* or related topics in this guide.

Related Information

- Before Using Google Cloud Print

Related Topics:

- Google Cloud Print Problems

Register Your Machine with Google Cloud Print Using Google Chrome™

Make sure you have already created a Google Account. If you do not have an account, use a computer or mobile device to access the Google website (https://accounts.google.com/signup) and create an account.

Make sure your Brother machine is idle before starting the registration process.

The steps in this section are examples for Windows users.

Screens on your computer may vary depending on your operating system and environment.

1. Open Google Chrome™ on your computer.
2. Sign in to your Google Account.
3. Click the Google Chrome™ menu icon, and then **Settings** > **Show advanced settings...**.
4. Click **Google Cloud Print** > **Manage**.
5. Follow the on-screen instructions to register your machine.
6. When a confirmation message appears on your machine, press the [OK] button.

If the confirmation message does not appear on your machine's LCD, repeat these steps.

7. When your Brother machine is successfully registered, it will appear in the **My devices** field.

Related Information

- Before Using Google Cloud Print

Register Your Machine with Google Cloud Print Using Web Based Management

Make sure you have already created a Google Account. If you do not have an account, use a computer or mobile device to access the Google website (https://accounts.google.com/signup) and create an account.

Make sure your Brother machine is idle before starting the registration process.

Before you begin to register your machine, confirm that the correct date and time are set on the machine.

1. Confirm that your Brother machine is connected to the same network as your computer or mobile device.
2. Start your web browser.
3. Type "https://machine's IP address" in your browser's address bar (where "machine's IP address" is the machine's IP address).

   For example:

   https://192.168.1.2
4. If the machine prompts you for a password, type it, and then click .
5. Click the **Network** tab.
6. Click the **Protocol** menu in the left navigation bar.
7. Make sure that **Google Cloud Print** is selected, and then click **Advanced Settings**.
8. Make sure that **Status** is set to **Enabled**. Click **Register**.
9. Follow the on-screen instructions to register your machine.
10. When a confirmation message appears on your machine, press the OK button.

If the confirmation message does not appear on your machine's LCD, repeat these steps.

11. Click **Google**.
12. The sign-in screen for Google Cloud Print™ appears. Sign in with your Google Account and follow the on-screen instructions to register your machine.
13. When you have finished registering your machine, return to the Web Based Management screen and make sure that **Registration Status** is set to **Registered**.

If your machine supports the Secure Function Lock feature, printing via Google Cloud Print™ is possible even if PC print for each user is restricted. To restrict printing via Google Cloud Print™, disable Google Cloud Print™ using Web Based Management or set the Secure Function Lock feature to Public Mode, and then restrict print for public users. See *Related Information*.

Related Information

- Before Using Google Cloud Print

Related Topics:

- Configure Public Mode for Secure Function Lock 3.0

Print from Google Chrome™ or Chrome OS™

1. Make sure your Brother machine is turned on.
2. Open the web page that you want to print.
3. Click the Google Chrome™ menu icon.
4. Click **Print**.
5. Select your machine from the printer list.
6. Change print options, if needed.
7. Click **Print**.

Related Information

- Google Cloud Print

Print from Google Drive™ for Mobile

1. Make sure your Brother machine is turned on.
2. Access Google Drive™ from your Android™ or iOS device's web browser.
3. Open the document that you want to print.
4. Tap the menu icon.
5. Tap **Print**.
6. Select your machine from the printer list.
7. Change print options, if needed.
8. Tap or **Print**.

Related Information

- Google Cloud Print

Print from Gmail™ Webmail Service for Mobile

1. Make sure your Brother machine is turned on.
2. Access the Gmail™ webmail service from your Android™ or iOS device's web browser.
3. Open the email that you want to print.
4. Tap the menu icon.

If **Print** appears beside the attachment name, you can also print the attachment. Tap **Print**, and then follow the instructions on your mobile device.

5. Tap **Print**.
6. Select your machine from the printer list.
7. Change print options, if needed.
8. Tap or **Print**.

Related Information

- Google Cloud Print

AirPrint

- AirPrint Overview
- Before Using AirPrint (macOS)
- Print Using AirPrint
- Scan Using AirPrint (macOS)
- Send a Fax Using AirPrint (macOS)

AirPrint Overview

AirPrint is a printing solution for Apple operating systems that allows you to wirelessly print photos, email, web pages and documents from your iPad, iPhone, iPod touch and Mac computer without the need to install a driver.

AirPrint also lets you send faxes directly from your Mac computer without printing them and lets you scan documents to your Mac computer. (MFC-L3710CW/MFC-L3735CDN/MFC-L3745CDW/MFC-L3750CDW/MFC-L3770CDW)

For more information, visit Apple's website.

Use of the "Works with Apple badge" means that an accessory has been designed to work specifically with the technology identified in the badge and has been certified by the developer to meet Apple performance standards.

Related Information

- AirPrint

Related Topics:

- AirPrint Problems

Before Using AirPrint (macOS)

Before printing using macOS, add your Brother machine to the printer list on your Mac computer.

1. Select **System Preferences** from the Apple menu.
2. Click **Printers & Scanners**.
3. Click the + icon below the Printers pane on the left.
   The **Add** screen appears.
4. Select your Brother machine, and then select **AirPrint** from the **Use** pop-up menu.
5. Click **Add**.

Related Information

- AirPrint

Print Using AirPrint

- Print from iPad, iPhone, or iPod touch
- Print Using AirPrint (macOS)

Print from iPad, iPhone, or iPod touch

The procedure used to print may vary by application. Safari is used in the example below.

1. Make sure your Brother machine is turned on.
2. Use Safari to open the page that you want to print.
3. Tap or .
4. Tap **Print**.
5. Make sure your Brother machine is selected.
6. If a different machine (or no printer) is selected, tap **Printer**.

   A list of available machines appears.
7. Tap your machine's name in the list.
8. Select the desired options, such as the number of pages to print and 2-sided printing (if supported by your machine).
9. Tap **Print**.

Related Information

- Print Using AirPrint

Print Using AirPrint (macOS)

The procedure used to print may vary by application. Safari is used in the example below. Before printing, make sure your Brother machine is in the printer list on your Mac computer.

1. Make sure your Brother machine is turned on.
2. On your Mac computer, use Safari to open the page that you want to print.
3. Click the **File** menu, and then select **Print**.
4. Make sure your Brother machine is selected. If a different machine (or no printer) is selected, click the **Printer** pop-up menu, and then select your Brother machine.
5. Select the desired options, such as the number of pages to print and 2-sided printing (if supported by your machine).
6. Click **Print**.

Related Information

- Print Using AirPrint

Related Topics:

- Before Using AirPrint (macOS)

Scan Using AirPrint (macOS)

Before scanning, make sure your Brother machine is in the scanner list on your Mac computer.

1. Load your document.
2. Select **System Preferences** from the Apple menu.
3. Click **Printers & Scanners**.
4. Select your Brother machine from the scanner list.
5. Click the **Scan** tab, and then click the **Open Scanner…** button.

   The Scanner screen appears.
6. If you place the document in the ADF, select **Use Document Feeder** check box, and then select the size of your document from the scan size setting pop-up menu.
7. Select the destination folder or destination application from the destination setting pop-up menu.
8. Click **Show Details** to change the scanning settings if needed.

   You can crop the image manually by dragging the mouse pointer over the portion you want to scan when scanning from the scanner glass.
9. Click **Scan**.

Related Information

- AirPrint

Related Topics:

- Before Using AirPrint (macOS)

Send a Fax Using AirPrint (macOS)

Related Models: MFC-L3710CW/MFC-L3735CDN/MFC-L3745CDW/MFC-L3750CDW/MFC-L3770CDW

Make sure your Brother machine is in the printer list on your Mac computer. Apple TextEdit is used in the example below.

- AirPrint supports only monochrome fax documents.

1. Make sure your Brother machine is turned on.
2. On your Mac computer, open the file that you want to send as a fax.
3. Click the **File** menu, and then select **Print**.
4. Click the **Printer** pop-up menu, and then select **Brother MFC-XXXX - Fax** (where XXXX is your model name).
5. Type the fax recipient information.
6. Click **Fax**.

Related Information

- AirPrint

Related Topics:

- Before Using AirPrint (macOS)

Mobile Printing for Windows

Mobile printing for Windows is a function to print wirelessly from your Windows mobile device. You can connect to the same network that your Brother machine is connected to and print without installing the printer driver on the device. Many Windows apps support this function.

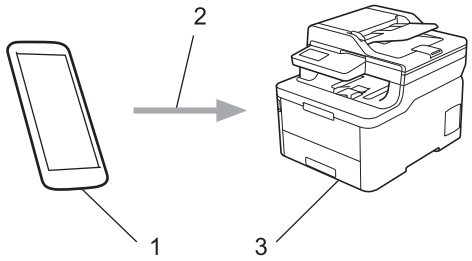

1. Windows mobile device (Windows 10 Mobile or later)
2. Wi-Fi® connection
3. Your Brother machine

Related Information

- Mobile/Web Connect

Mopria® Print Service

Mopria® Print Service is a print feature on Android™ mobile devices (Android™ version 4.4 or later) developed by the Mopria® Alliance. With this service, you can connect to the same network as your machine and print without additional setup. Many native Android™ apps support printing.

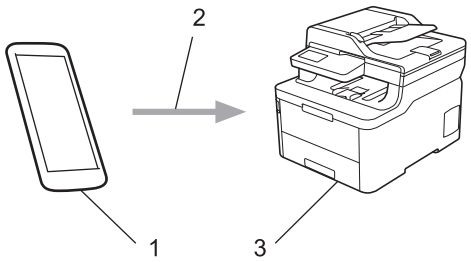

1. Android™ 4.4 or later
2. Wi-Fi® Connection
3. Your Brother Machine

You must download the Mopria® Print Service from the Google Play™ Store and install it on your Android™ device. Before using this service, you must turn it on.

Related Information

- Mobile/Web Connect

Brother iPrint&Scan for Mobile Devices

Use Brother iPrint&Scan to print and scan from various mobile devices.

- For Android™ Devices

  Brother iPrint&Scan allows you to use features of your Brother machine directly from your Android™ device, without using a computer.

  Download and install Brother iPrint&Scan from the Google Play™ Store app.
- For all iOS supported devices including iPhone, iPad and iPod touch

  Brother iPrint&Scan allows you to use features of your Brother machine directly from your iOS device.

  Download and install Brother iPrint&Scan from the App Store.
- For Windows Devices

  Brother iPrint&Scan allows you to use features of your Brother machine directly from your Windows device, without using a computer.

  Download and install Brother iPrint&Scan from the Microsoft Store.

For more detailed information, visit support.brother.com/ips.

Related Information

- Mobile/Web Connect

Related Topics:

- Brother iPrint&Scan for Windows and Mac

Near-Field Communication (NFC)

Related Models: MFC-L3770CDW

Near-Field Communication (NFC) allows for simple transactions, data exchange, and wireless connections between two devices that are in close range of each other.

If your Android™ device is NFC-enabled, you can print data (photos, PDF files, text files, web pages and email messages) from the device or scan photos and documents to the device by touching it to the NFC symbol on your machine.

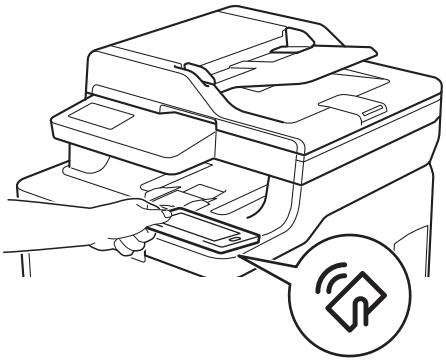

You must download and install Brother iPrint&Scan on your Android™ device to use this feature. For more detailed information, visit support.brother.com/ips.

Related Information

- Mobile/Web Connect

ControlCenter

Use Brother's ControlCenter software utility to quickly access your frequently-used applications. Using ControlCenter gives you direct access to specific applications.

- ControlCenter4 (Windows)

ControlCenter4 (Windows)

- Change the Operation Mode in ControlCenter4 (Windows)
- Scan Using ControlCenter4 Home Mode (Windows)
- Scan Using ControlCenter4 Advanced Mode (Windows)
- Set Up the Brother Machine Using ControlCenter4 (Windows)
- Create a Custom Tab Using ControlCenter4 Advanced Mode (Windows)

Change the Operation Mode in ControlCenter4 (Windows)

ControlCenter4 has two operation modes: **Home Mode** and **Advanced Mode**. You can change modes at any time.

Home Mode

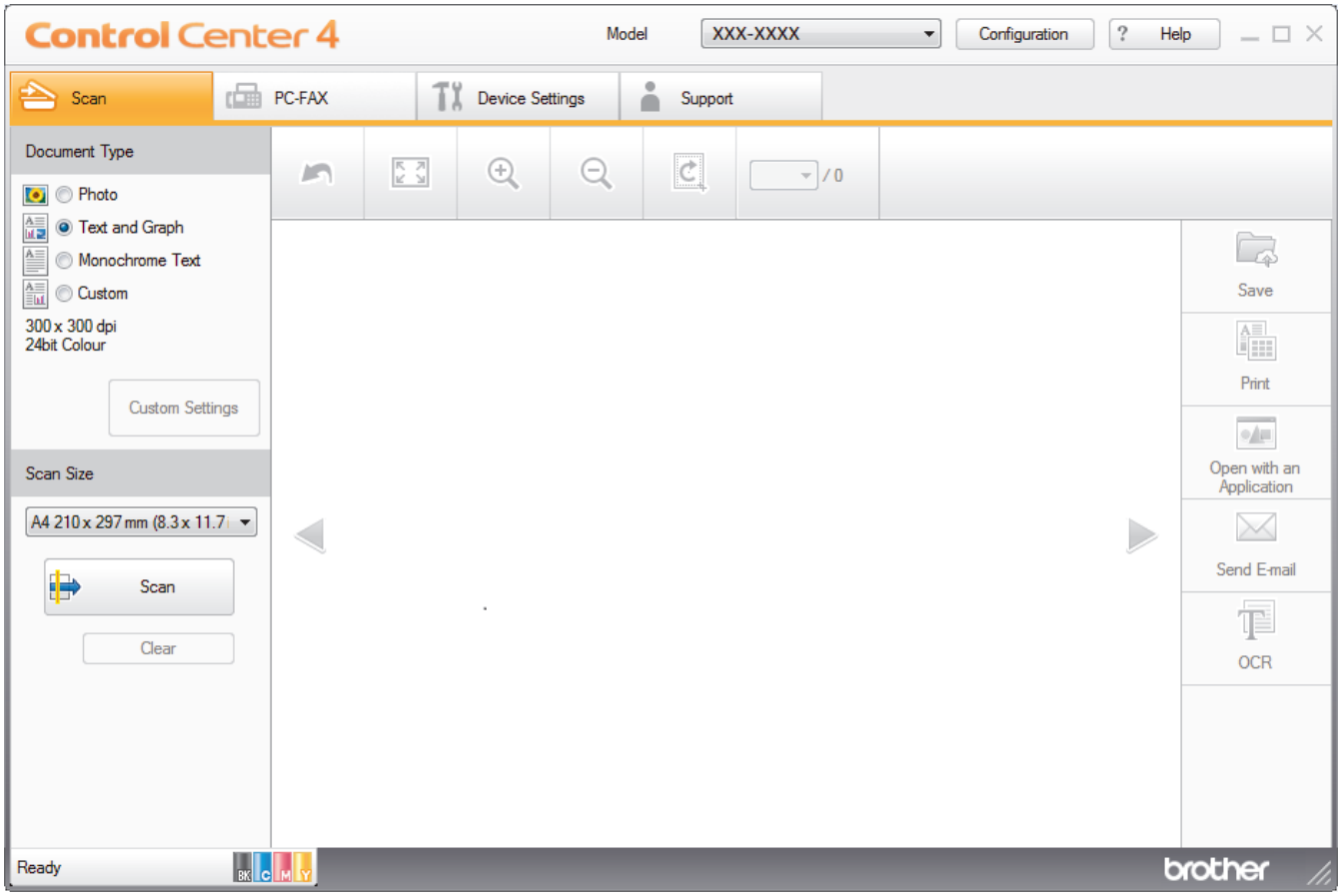

Advanced Mode

- **Home Mode**

  ControlCenter4 Home Mode lets you access your machine's main features easily.

- **Advanced Mode**

ControlCenter4 Advanced Mode gives you more control over the details of your machine's features and allows you to customise one-button scan actions.

To change operation mode:

1. Click the (**ControlCenter4**) icon in the task tray, and then select **Open**.
2. Click the **Configuration** button, and then select **Mode Select**.
3. The mode selection dialog box appears. Select either the **Home Mode** or **Advanced Mode** option.

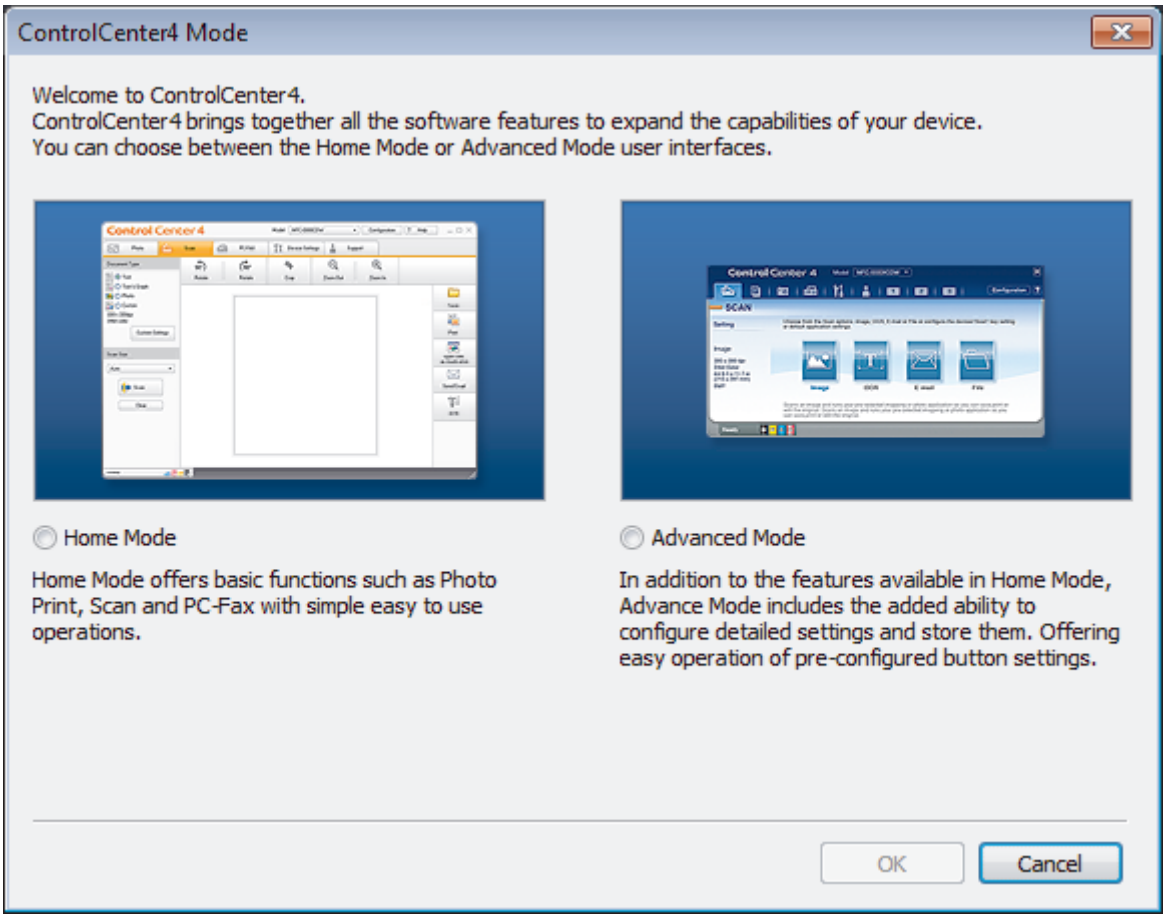

4. Click **OK**.

Related Information

- ControlCenter4 (Windows)

Scan Using ControlCenter4 Home Mode (Windows)

Use ControlCenter4 Home Mode to access your machine's main features.

- Scan Using ControlCenter4 Home Mode (Windows)
- Save Scanned Data to a Folder as a PDF File Using ControlCenter4 Home Mode (Windows)
- Scan Both Sides of a Document Automatically Using ControlCenter4 Home Mode (Windows)
- Scan Settings for ControlCenter4 Home Mode (Windows)

Scan Using ControlCenter4 Advanced Mode (Windows)

ControlCenter4 Advanced Mode gives you more control over the details of your machine's features and allows you to customise one-button scan actions.

- Scan Photos and Graphics Using ControlCenter4 Advanced Mode (Windows)
- Save Scanned Data to a Folder as a PDF File Using ControlCenter4 Advanced Mode (Windows)
- Scan Both Sides of a Document Automatically Using ControlCenter4 Advanced Mode (Windows)
- Scan Both Sides of an ID Card Using ControlCenter4 Advanced Mode (Windows)
- Scan to Email Attachment Using ControlCenter4 Advanced Mode (Windows)
- Scan to an Editable Text File (OCR) Using ControlCenter4 Advanced Mode (Windows)
- Scan Settings for ControlCenter4 Advanced Mode (Windows)

Set Up the Brother Machine Using ControlCenter4 (Windows)

Related Models: MFC-L3710CW/MFC-L3735CDN/MFC-L3745CDW/MFC-L3750CDW/MFC-L3770CDW

If Secure Function Lock is set to On, you cannot use Remote Setup.

1. Click the (**ControlCenter4**) icon in the task tray, and then click **Open**.
2. Click the **Device Settings** tab.
3. Click the **Remote Setup** button.
4. Configure the settings as needed.

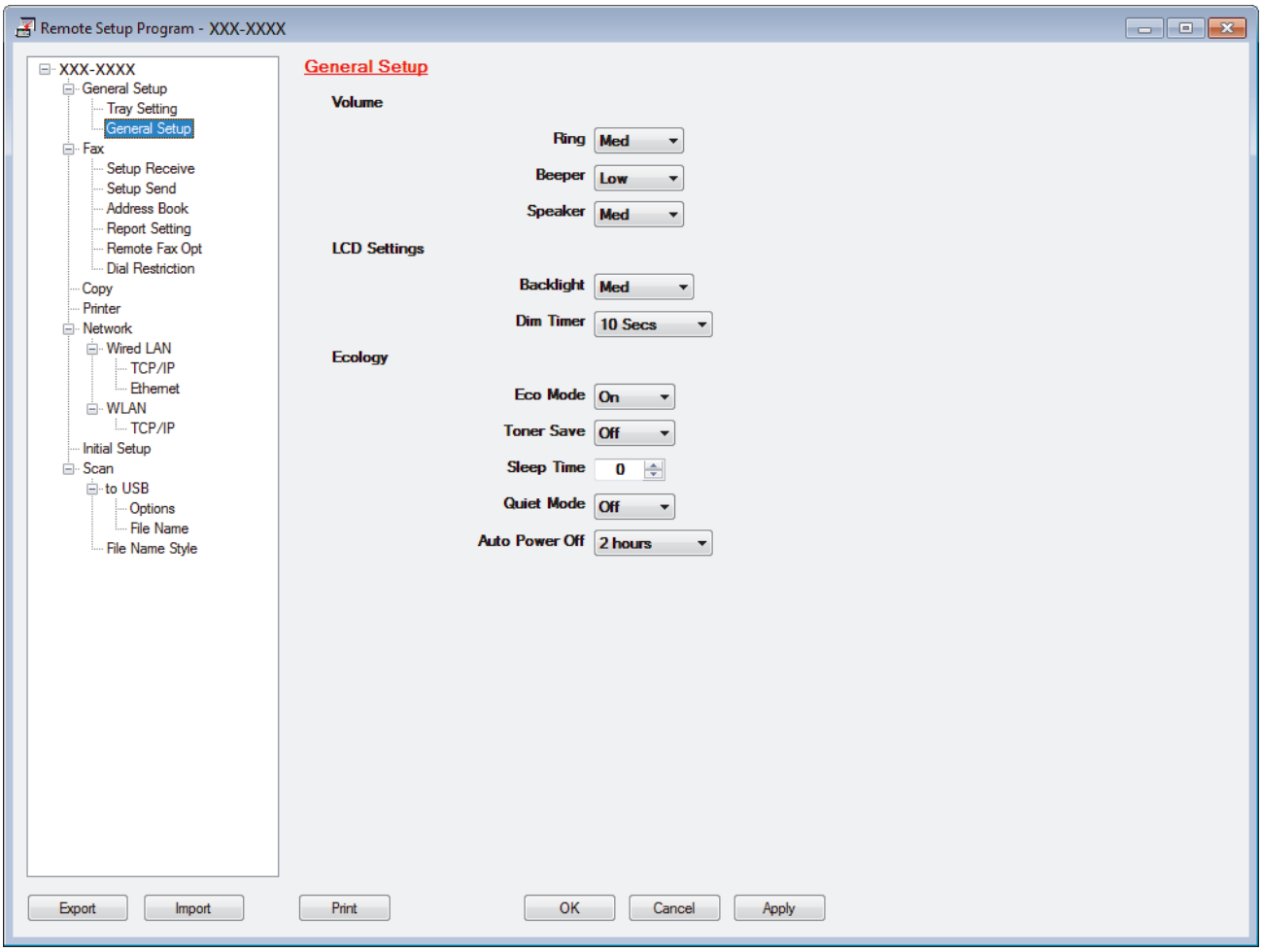

Export

Click to save the current configuration settings to a file.

Click **Export** to save your address book or all settings for your machine.

Import

Click to import a file and read its settings.

Print

Click to print the selected items on the machine. You cannot print the data until it is uploaded to the machine. Click **Apply** to upload the new data to the machine, and then click **Print**.

OK

Click to start uploading data to the machine, and then exit the Remote Setup Program. If an error message appears, confirm that your data is correct, and then click **OK**.

Cancel

Click to exit the Remote Setup Program without uploading data to the machine.

Apply

Click to upload data to the machine without exiting the Remote Setup Program.

5. Click **OK**.

- If your computer is protected by a firewall and is unable to use Remote Setup, you may need to configure the firewall settings to allow communication through port numbers 137 and 161.
- If you are using Windows Firewall and you installed the Brother software and drivers from the Brother installation disc, the necessary firewall settings have already been set.

Related Information

- ControlCenter4 (Windows)
- Remote Setup (Windows)

Create a Custom Tab Using ControlCenter4 Advanced Mode (Windows)

You can create up to three customised tabs, each including up to five customised buttons, with your preferred settings.

Select **Advanced Mode** as the mode setting for ControlCenter4.

1. Click the (**ControlCenter4**) icon in the task tray, and then click **Open**.
2. Click the **Configuration** button, and then select **Create custom tab**.
   A custom tab is created.
3. To change the name of a custom tab, right-click the custom tab, and then select **Rename custom tab**.
4. Click the **Configuration** button, select **Create custom button**, and then select the button you want to create.
   The settings dialog box appears.
5. Type the button name, and then change the settings, if needed. Click **OK**.
   The setting options vary depending on the button you select.

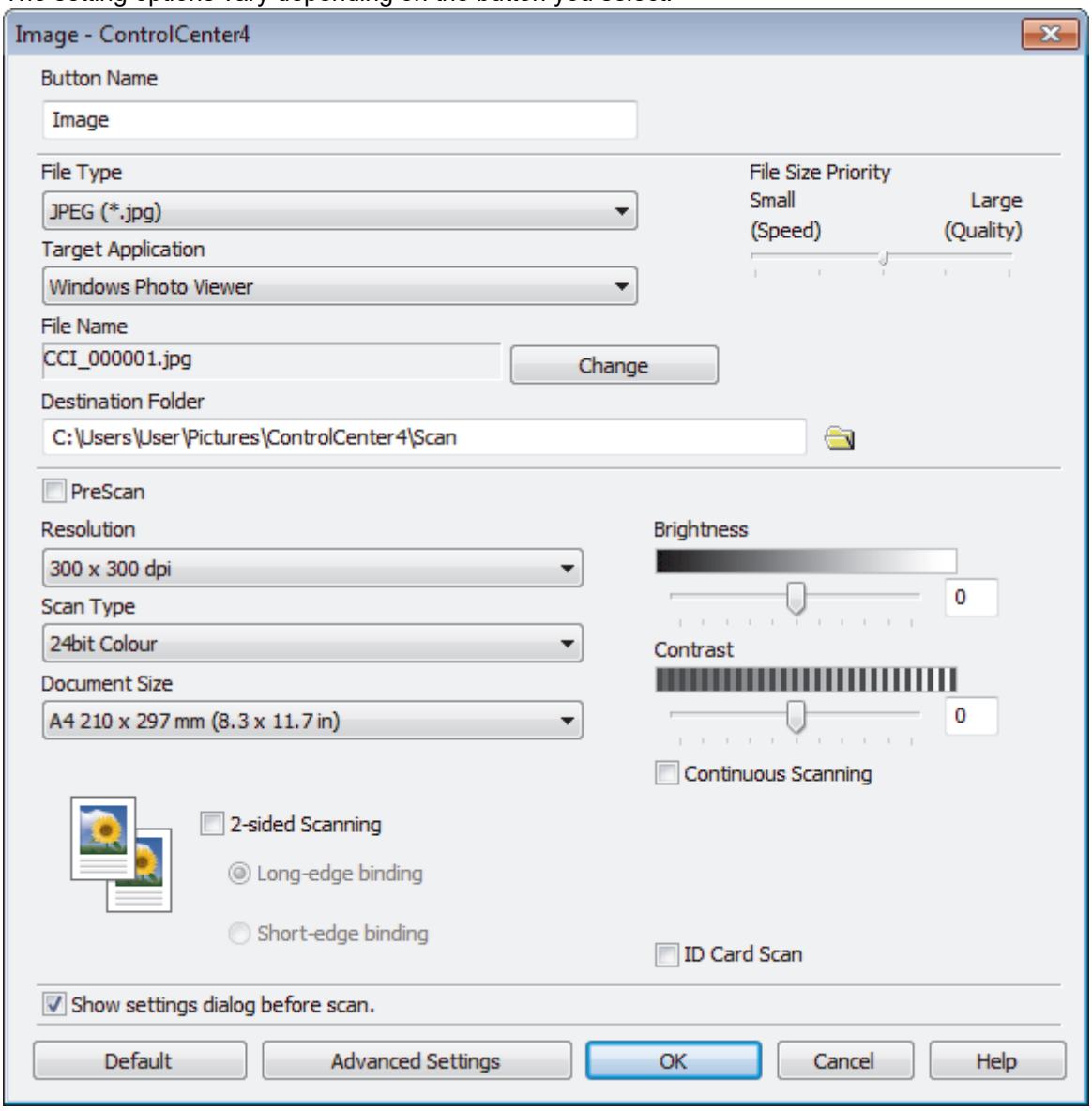

You can change or remove the created tab, button, or settings. Click the **Configuration** button, and then follow the menu.

Related Information

- ControlCenter4 (Windows)

Brother iPrint&Scan for Windows and Mac

- Brother iPrint&Scan Overview
- Scan Using Brother iPrint&Scan (Mac)

Brother iPrint&Scan Overview

Use Brother iPrint&Scan for Windows and Mac to print and scan from your computer.

The following screen shows an example of Brother iPrint&Scan for Windows. The actual screen may differ depending on the version of the application.

- For Windows

  Go to your model's **Downloads** page on the Brother Solutions Center at support.brother.com to download the latest application.

- For Mac

  Download and install Brother iPrint&Scan from the App Store.

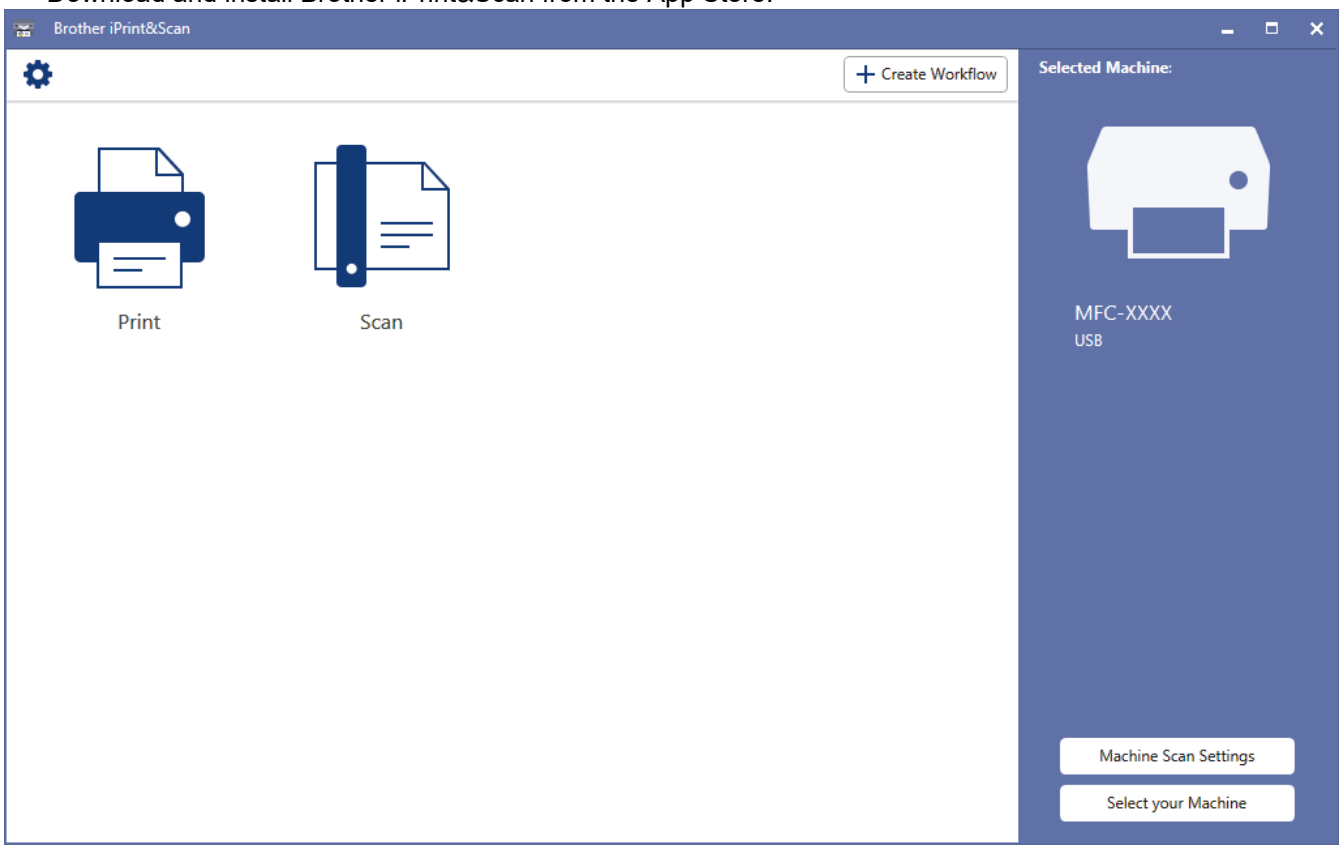

Related Information

- Brother iPrint&Scan for Windows and Mac

Related Topics:

- Brother iPrint&Scan for Mobile Devices

Troubleshooting

Use this section to resolve typical problems you may encounter when using your Brother machine. You can correct most problems yourself.

IMPORTANT

For technical help, you must call the country where you bought the machine. Calls must be made from within that country.

Using non-Brother supplies may affect the print quality, hardware performance, and machine reliability.

If you need additional help, go to the Brother Solutions Center at support.brother.com.

First, check the following:

- The machine's power cord is connected correctly and the machine's power is on. See the *Quick Setup Guide*.
- All of the protective materials have been removed. See the *Quick Setup Guide*.
- Paper is loaded correctly in the paper tray.
- The interface cables are securely connected to the machine and the computer, or the wireless connection is set up on both the machine and your computer.
- Error and maintenance messages

If you did not solve the problem with the checks, identify the problem and then see *Related Information*.

Related Information

- Error and Maintenance Messages
- Error Messages When Using the Brother Web Connect Feature
- Document Jams
- Paper Jams
- Printing Problems
- Improve the Print Quality
- Telephone and Fax Problems
- Network Problems
- Google Cloud Print Problems
- AirPrint Problems
- Other Problems
- Check the Machine Information
- Reset Your Brother Machine

Error and Maintenance Messages

- MFC-L3770CDW

  If the LCD displays errors and your Android™ device supports the NFC feature, touch your device to the NFC symbol on your Brother machine to access the Brother Solutions Center and browse the latest FAQs from your device. (Your mobile telephone provider's message and data rates may apply.)

  Make sure the NFC settings of both your Brother machine and your Android™ device are set to On.

As with any sophisticated office product, errors may occur and supply items may have to be replaced. If this happens, your machine identifies the error or required routine maintenance and shows the appropriate message. The most common error and maintenance messages are shown in the table.

Follow the instructions in the **Action** column to solve the error and remove the message.

You can correct most errors and perform routine maintenance by yourself. If you need more tips: Visit support.brother.com, and click the **FAQs & Troubleshooting** page.

>> DCP-L3510CDW/DCP-L3551CDW
>> MFC-L3710CW/MFC-L3735CDN/MFC-L3745CDW/MFC-L3750CDW/MFC-L3770CDW

DCP-L3510CDW/DCP-L3551CDW

Error Message	Cause	Action
`2-sided Disabled`	The back cover of the machine is not closed completely.	Close the back cover of the machine until it locks in the closed position.
`Access Denied`	The function you want to use is restricted by Secure Function Lock 3.0.	Ask your administrator to check your Secure Function Lock Settings.
`Belt End Soon`	The belt unit is near the end of its life.	Order a new belt unit before the LCD displays `Replace Belt`.
`Calibrate`	Calibration failed.	• Press and hold down ⏻ to turn the machine off. Wait a few seconds, and then turn it on again. Perform the colour calibration again using the LCD. • Install a new belt unit. • If the problem continues, contact Brother customer service or your local Brother dealer.
`Cartridge Error`	The toner cartridge is not installed correctly.	Remove the toner cartridge and drum unit assembly for the colour that is indicated on the LCD. Take out the toner cartridge, and put it back into the drum unit again. Re-install the toner cartridge and drum unit assembly back in the machine. If the problem continues, contact Brother customer service or your local Brother dealer.
`Condensation`	Condensation may have formed inside the machine after a room temperature change.	Leave the machine turned on. Wait for 30 minutes with the top cover in the open position. Then turn off the machine and close the cover. Turn it on again.
`Cooling Down`	The temperature of the inside of the machine is too hot. The machine	Wait until the machine has finished cooling down. Make sure all vents on the machine are clear of obstructions.

Error Message	Cause	Action
	pauses its current print job and goes into cooling down mode.	When the machine has cooled down, it will resume printing.
`Cover is Open.`	The top cover is not completely closed.	Open and then firmly close the top cover of the machine.
	The fuser cover is not completely closed or paper was jammed in the back of the machine when you turned on the power.	Close the fuser cover located inside the back cover of the machine. Make sure paper is not jammed inside the back of the machine, and then close the fuser cover.
	The ADF cover is not completely closed.	Close the ADF cover. If the error message remains, press **Stop/Exit**.
`Document Jam`	The document was not inserted or fed correctly, or the document scanned from the ADF was too long.	Remove the jammed paper from the ADF unit. Clear any debris or scraps of paper from the ADF unit paper path. Press **Stop/Exit**.
`Drum !`	The corona wire on the drum unit must be cleaned.	Clean the corona wire on the drum unit. 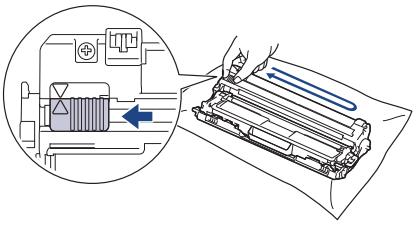 See *Related Information*: *Clean the Corona Wires*. If the problem continues, replace the drum unit with a new one.
`Drum End Soon`	The drum unit is near the end of its life.	Order a new drum unit before you get the `Replace Drum` message.
`Drum Stop`	It is time to replace the drum unit.	Replace the drum unit. See *Related Information*: *Replace the Drum Unit*.
`Jam 2-sided`	The paper is jammed underneath the paper tray or the fuser unit.	Remove the paper tray or open the back cover to gently remove the jammed paper.
`Jam Inside`	The paper is jammed inside the machine.	Open the top cover, remove the toner cartridges and drum unit assembly, and gently remove the jammed paper. Reinstall the toner cartridges and drum unit assemblies into the machine. Close the top cover.
`Jam Manual Feed`	The paper is jammed in the manual feed slot of the machine.	Gently remove the jammed paper from in and around the manual feed slot. Reload the paper into the manual feed slot, and then press **Mono Start** or **Colour Start**.
`Jam Rear`	The paper is jammed in the back of the machine.	Open the fuser cover and gently remove the jammed paper. Close the fuser cover. If the error message remains, press **Mono Start** or **Colour Start**.

Error Message	Cause	Action
Jam Tray1	The paper is jammed in the indicated paper tray.	Pull the paper tray out completely and gently remove all jammed paper. Put the paper tray firmly back in the machine.
Limit Exceeded	The print limit set in Secure Function Lock 3.0 was reached.	Ask your administrator to check your Secure Function Lock Settings.
Manual Feed	**Manual** was selected as the paper source in the printer driver, but there is no paper in the manual feed slot.	Place paper in the manual feed slot.
Media Mismatch	The media type specified in the printer driver differs from the paper type specified in the machine's menu.	Load the correct type of paper in the tray, and then select the correct media type in the Paper Type setting on the machine.
No Belt Unit	The belt unit is not installed or not installed correctly.	Reinstall the belt unit.
No Drum Unit	The drum unit is not installed correctly.	Reinstall the toner cartridge and drum unit assembly for the colour indicated on the LCD.
No Paper T1	The machine is out of paper, or paper is not loaded correctly in the paper tray.	• Refill paper in the paper tray. Make sure the paper guides are set to the correct size. • If paper is in the tray, remove it and load it again. Make sure the paper guides are set to the correct size. • Do not overfill the paper tray.
No Toner	The toner cartridge or the toner cartridge and drum unit assembly is not installed correctly.	Remove the toner cartridge and drum unit assembly. Remove the toner cartridge from the drum unit, and reinstall the toner cartridge back into the drum unit. Reinstall the toner cartridge and drum unit assembly back in the machine. If the problem continues, replace the toner cartridge.
No Tray T1	The paper tray is not installed or not installed correctly.	Reinstall the paper tray indicated on the LCD.
No Waste Toner	The waste toner box is not installed or not installed correctly.	Reinstall the waste toner box.
Out of Memory	The machine's memory is full.	**If a copy operation is in progress, do one of the following:** • Press **Mono Start** or **Colour Start** to copy the scanned pages. • Press **Stop/Exit** and wait until the other operations in progress finish, and then try again. **If a scan operation is in progress, do one of the following:** • Split the document into multiple parts. • Reduce the Resolution. • Reduce the File Size. • Select the high compression PDF file type. If a print operation is in progress, press **Stop/Exit**, and then reduce the print resolution.

Error Message	Cause	Action
Print Data Full	The machine's memory is full.	Press **Stop/Exit** and delete the previously stored secure print data.
Print Unable ##	The machine has a mechanical problem.	• Press and hold ⏻ to turn the machine off, wait a few minutes, and then turn it on again. • If the problem continues, contact Brother customer service.
Registration	Registration failed.	• Press and hold down ⏻ to turn the machine off. Wait a few seconds, and then turn it on again. Perform the colour registration again using the LCD. • Install a new belt unit. • If the problem continues, contact Brother customer service or your local Brother dealer.
Replace Belt	It is time to replace the belt unit.	Replace the belt unit with a new one. See *Related Information*: *Replace the Belt Unit.*
Replace Drum	It is time to replace the drum unit.	Replace the drum unit for the colour indicated on the LCD.
	If this message is displayed even after replacing the drum unit with new one, the drum unit counter was not reset.	Reset the drum unit counter. See *Related Information*: *Replace the Drum Unit.*
Replace Toner	The toner cartridge is at the end of its life. The machine stops all print operations.	Replace the toner cartridge for the colour indicated on the LCD. See *Related Information*: *Replace the Toner Cartridge.*
Replace WT Box	It is time to replace the waste toner box.	Replace the waste toner box with a new one. See *Related Information*: *Replace the Waste Toner Box.*
Scan Unable ##	The machine has a mechanical problem.	• Press and hold ⏻ to turn the machine off, and then turn it on again. • If the problem continues, contact Brother customer service.
Self-Diagnostic	The temperature of the fuser unit does not rise to a specified temperature within the specified time.	• Press and hold ⏻ to turn the machine off, wait a few seconds, and then turn it on again. Leave the machine idle for 15 minutes with the power on.
	The fuser unit is too hot.	
Short paper	The length of the paper in the tray is too short for the machine to deliver it to the Face down output tray.	Open the back cover (Face up output tray) to let the printed page exit onto the Face up output tray. Remove the printed pages, and then press **Mono Start** or **Colour Start**.
Size Error	The paper size defined in the printer driver is not supported by the defined tray.	Choose a paper size supported by the defined tray.
Size Error DX	The paper size specified in the machine's paper size setting is not	Press **Stop/Exit** (if required).

Error Message	Cause	Action
	available for automatic 2-sided printing.	Load the correct size of paper in the tray and set the tray for that paper size. Choose a paper size supported by 2-sided printing. Paper size available for automatic 2-sided printing is A4.
	The paper in the tray is not the correct size and is not available for automatic 2-sided printing.	
Size Mismatch	The paper in the tray is not the correct size.	Load the correct size of paper in the tray and set the size of paper for the tray.
Toner Error	One or more toner cartridges are not installed or not installed correctly.	Pull out the drum units. Remove all of the toner cartridges, and then put them back into the drum units.
Toner Low	If the LCD displays this message, you can still print. The toner cartridge is near the end of its life.	Order a new toner cartridge before the LCD displays Replace Toner.
WT Box End Soon	The waste toner box is almost full.	Order a new waste toner box before the LCD displays Replace WT Box.

MFC-L3710CW/MFC-L3735CDN/MFC-L3745CDW/MFC-L3750CDW/MFC-L3770CDW

Error Message	Cause	Action
2-sided Disabled	The back cover of the machine is not closed completely.	Close the back cover of the machine until it locks in the closed position.
Access Denied	The function you want to use is restricted by Secure Function Lock 3.0.	Ask your administrator to check your Secure Function Lock Settings.
Calibration	Calibration failed.	• Press and hold down ⏻ to turn the machine off. Wait a few seconds, and then turn it on again. Perform the colour calibration again using the LCD. • Install a new belt unit. • If the problem continues, contact Brother customer service or your local Brother dealer.
Cartridge Error	The toner cartridge is not installed correctly.	Remove the toner cartridge and drum unit assembly for the colour that is indicated on the LCD. Take out the toner cartridge, and put it back into the drum unit again. Re-install the toner cartridge and drum unit assembly back in the machine. If the problem continues, contact Brother customer service or your local Brother dealer.
Comm.Error	Poor telephone line quality caused a communication error.	Send the fax again or connect the machine to another telephone line. If the problem continues, contact the telephone company and ask them to check your telephone line.
Condensation	Condensation may have formed inside the machine after a room temperature change.	Leave the machine turned on. Wait for 30 minutes with the top cover in the open position. Then turn off the machine and close the cover. Turn it on again.

Error Message	Cause	Action
Cooling Down	The temperature of the inside of the machine is too hot. The machine pauses its current print job and goes into cooling down mode.	Wait until the machine has finished cooling down. Make sure all vents on the machine are clear of obstructions. When the machine has cooled down, it will resume printing.
Cover is Open	The top cover is not completely closed.	Open and then firmly close the top cover of the machine.
Cover is Open.	The fuser cover is not completely closed or paper was jammed in the back of the machine when you turned on the power.	Close the fuser cover located inside the back cover of the machine. Make sure paper is not jammed inside the back of the machine, and then close the fuser cover.
Cover is Open.	The ADF cover is not completely closed.	Close the ADF cover. If the error message remains, press ✕.
Disconnected	The other person or other person's fax machine stopped the call.	Try to send or receive again. If calls are stopped repeatedly and you are using a VoIP (Voice over IP) system, try changing the Compatibility to Basic (for VoIP).
Document Jam	The document was not inserted or fed correctly, or the document scanned from the ADF was too long.	Remove the jammed paper from the ADF unit. Clear any debris or scraps of paper from the ADF unit paper path. Press ✕.
Supplies Drum End Soon	The drum unit is near the end of its life.	Order a new drum unit before the LCD displays Replace Drum.
Drum !	The corona wires on the drum unit must be cleaned.	Clean the corona wires on the drum unit. 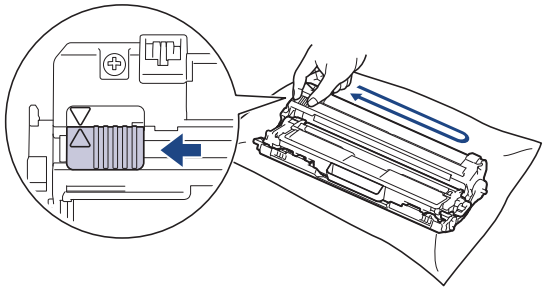 See *Related Information*: *Clean the Corona Wires*. If the problem continues, replace the drum unit with a new one.
Drum Stop	It is time to replace the drum unit.	Replace the drum unit. See *Related Information*: *Replace the Drum Unit*.
Jam 2-sided	The paper is jammed underneath the paper tray or the fuser unit.	Remove the paper tray or open the back cover to gently remove the jammed paper.
Jam Inside	The paper is jammed inside the machine.	Open the top cover, remove the toner cartridges and drum unit assembly, and gently remove the jammed paper. Reinstall the toner cartridges and drum unit assemblies into the machine. Close the top cover.
Jam Manual Feed	The paper is jammed in the manual feed slot of the machine.	Gently remove the jammed paper from in and around the manual feed slot. Reload the paper into the manual feed slot, and then press Start.

Error Message	Cause	Action
Jam MP Tray	The paper is jammed in the MP tray.	Gently remove the jammed paper from in and around the MP tray. Press Retry.
Jam Rear	The paper is jammed in the back of the machine.	Open the fuser cover and gently remove the jammed paper. Close the fuser cover. If the error message remains, press Retry.
Jam Tray 1	The paper is jammed in the indicated paper tray.	Pull out the paper tray and remove all jammed paper as shown in the animation on the LCD.
Limit Exceeded	The print limit set in Secure Function Lock 3.0 was reached.	Ask your administrator to check your Secure Function Lock Settings.
Manual Feed	**Manual** was selected as the paper source in the printer driver, but there is no paper in the manual feed slot.	Place paper in the manual feed slot.
Media Type Mismatch	The media type specified in the printer driver differs from the paper type specified in the machine's menu.	Load the correct type of paper in the tray, and then select the correct media type in the Paper Type setting on the machine.
No Belt Unit	The belt unit is not installed or not installed correctly.	Reinstall the belt unit.
No HUB Support	A USB hub device is connected to the USB direct interface.	Disconnect the USB hub device from the USB direct interface.
No Drum Unit	The drum unit is not installed correctly.	Reinstall the toner cartridge and drum unit assembly for the colour indicated on the LCD.
No Paper	The machine is out of paper, or paper is not loaded correctly in the paper tray.	• Refill paper in the paper tray. Make sure the paper guides are set to the correct size. • If paper is in the tray, remove it and load it again. Make sure the paper guides are set to the correct size. • Do not overfill the paper tray.
No Paper MP	The MP tray is out of paper, or paper is not loaded correctly in the MP tray.	Do one of the following: • Refill paper in the MP tray. Make sure the paper guides are set to the correct size. • If paper is in the tray, remove it and load it again. Make sure the paper guides are set to the correct size.
No Paper T1	The paper tray is out of paper, or paper is not loaded correctly in the paper tray.	Do one of the following: • Refill paper in the paper tray indicated on the LCD. Make sure the paper guides are set to the correct size. • If paper is in the tray, remove it and load it again. Make sure the paper guides are set to the correct size. • Do not overfill the paper tray.
No Toner	The toner cartridge or the toner cartridge and drum unit assembly is not installed correctly.	Remove the toner cartridge and drum unit assembly. Remove the toner cartridge from the drum unit, and reinstall the toner cartridge back into the drum unit. Reinstall the toner cartridge and drum unit assembly back in the machine. If the problem continues, replace the toner cartridge.
No Tray T1	The paper tray is not installed or not installed correctly.	Reinstall the paper tray indicated on the LCD.

Error Message	Cause	Action
No Waste Toner	The waste toner box is not installed or not installed correctly.	Reinstall the waste toner box.
Out of Fax Memory	The machine's fax memory is full.	If you are using the Fax Preview function, delete unwanted received fax data. If you are using the Memory Receive function and are not using the Fax Preview function, print received fax data. See *Related Information*: *Print a Fax Stored in the Machine's Memory*.
Out of Memory	The machine's memory is full.	**If a fax-sending or copy operation is in progress, do one of the following:** • Press Send Now to send the pages scanned so far. • Press Partial Print to copy the pages scanned so far. • Press Quit or and wait until the other operations that are in progress finish, and then try again. **If a scan operation is in progress, do one of the following:** • Split the document into multiple parts. • Reduce the Resolution. • Reduce the File Size. • Select the high compression PDF file type. • Clear faxes from the memory. If a print operation is in progress, press and reduce the print resolution.
Print Data Full	The machine’s memory is full.	Press and delete the previously stored secure print data.
Print Unable ##	The machine has a mechanical problem.	• Press and hold to turn the machine off, wait a few minutes, and then turn it on again. • If the problem continues, contact Brother customer service.
Registration	Registration failed.	• Press and hold down to turn the machine off. Wait a few seconds, and then turn it on again. Perform the colour registration again using the LCD. • Install a new belt unit. • If the problem continues, contact Brother customer service or your local Brother dealer.
Supplies Replace Drum	It is time to replace the drum unit.	Replace the drum unit for the colour indicated on the LCD.
	If this message is displayed even after replacing the drum unit with new one, the drum unit counter was not reset.	Reset the drum unit counter. See *Related Information*: *Replace the Drum Unit.*
Replace Toner	The toner cartridge is at the end of its life. The machine stops all print operations. While memory is available, faxes are stored in the memory.	Replace the toner cartridge for the colour indicated on the LCD. See *Related Information*: *Replace the Toner Cartridge.*

Error Message	Cause	Action
Replace WT Box	It is time to replace the waste toner box.	Replace the waste toner box with a new one. See *Related Information*: *Replace the Waste Toner Box.*
Scan Unable	The document is too long for 2-sided scanning.	Press . For 2-sided scanning, use A4 size paper. Other paper must be within the following size: Length: 147.3 to 355.6 mm Width: 105 mm to 215.9 mm
Scan Unable ##	The machine has a mechanical problem.	• Press and hold to turn the machine off, and then turn it on again. • If the problem continues, contact Brother customer service.
Self-Diagnostic	The temperature of the fuser unit does not rise to a specified temperature within the specified time.	Press and hold to turn the machine off, wait a few seconds, and then turn it on again. Leave the machine idle for 15 minutes with the power on.
	The fuser unit is too hot.	
Short paper	The length of the paper in the tray is too short for the machine to deliver it to the Face down output tray.	Open the back cover (Face up output tray) to let the printed page exit onto the Face up output tray. Remove the printed pages, and then press Retry.
Size Error	The paper size defined in the printer driver is not supported by the defined tray.	Choose a paper size supported by the defined tray.
Size Error 2-sided	The paper size specified in the machine's paper size setting is not available for automatic 2-sided printing.	Press (if required). Load the correct size of paper in the tray and set the tray for that paper size. Choose a paper size supported by 2-sided printing. Paper size available for automatic 2-sided printing is A4.
	The paper in the tray is not the correct size and is not available for automatic 2-sided printing.	
Size Mismatch	The paper in the tray is not the correct size.	Load the correct size of paper in the tray and set the size of paper for the tray.
Supplies Belt End Soon	The belt unit is near the end of its life.	Order a new belt unit before the LCD displays Replace Belt.
Supplies Replace Belt	It is time to replace the belt unit.	Replace the belt unit with a new one. See *Related Information*: *Replace the Belt Unit.*
Supplies Toner Low: X (X indicates the toner cartridge or drum unit colour that is near the end of its life. BK=Black, C=Cyan, M=Magenta, Y=Yellow.)	If the LCD displays this message, you can still print. The toner cartridge is near the end of its life.	Order a new toner cartridge before the LCD displays Replace Toner.
Supplies WT Box End Soon	The waste toner box is almost full.	Order a new waste toner box before the LCD displays Replace WT Box.
Toner Error	One or more toner cartridges are not installed or not installed correctly.	Pull out the drum units. Remove all of the toner cartridges, and then put them back into the drum units.

Error Message	Cause	Action
Touchscreen Initialisation Failed	The touchscreen was pressed before the power on initialisation was completed.	Make sure nothing is touching the touchscreen.
	Debris may be stuck between the lower part of the touchscreen and its frame.	Insert a piece of stiff paper between the lower part of the touchscreen and its frame and slide it back and forth to push out any debris.
Unusable Device	A USB device or USB flash drive that is encrypted or not supported has been connected to the USB direct interface.	Unplug the device from the USB direct interface.
Unusable Device Remove the Device. Turn the power off and back on again.	A defective USB device or a high power consumption USB device has been connected to the USB direct interface.	• Unplug the device from the USB direct interface. • Press and hold ⏻ to turn the machine off, and then turn it on again.
Wrong Paper Size MP Wrong Paper Size T1	The specified tray ran out of paper during copying and the machine could not feed the same size paper from the next priority tray.	Refill the paper in the paper tray.

Related Information

- Troubleshooting
  - Transfer Your Faxes or Fax Journal Report

Related Topics:

- Load and Print Using the Paper Tray
- Load and Print Using the Multi-purpose Tray (MP Tray)
- Replace Supplies
- Replace the Toner Cartridge
- Replace the Drum Unit
- Replace the Belt Unit
- Replace the Waste Toner Box
- Clean the Corona Wires
- Print a Fax Stored in the Machine's Memory
- Calibrate Colour Output

Transfer Your Faxes or Fax Journal Report

Related Models: MFC-L3710CW/MFC-L3735CDN/MFC-L3745CDW/MFC-L3750CDW/MFC-L3770CDW

If the LCD displays:

- `[Print Unable]` ##
- `[Scan Unable]` ##

We recommend transferring your faxes to another fax machine or to your computer.

You can also transfer the Fax Journal report to see if there are any faxes you must transfer.

If there is an error message on the LCD after you transfer the faxes, disconnect your Brother machine from the power source for several minutes, and then reconnect it.

Related Information

- Error and Maintenance Messages
  - Transfer Faxes to Another Fax Machine
  - Transfer Faxes to Your Computer
  - Transfer the Fax Journal Report to Another Fax Machine

Transfer Faxes to Another Fax Machine

Related Models: MFC-L3710CW/MFC-L3735CDN/MFC-L3745CDW/MFC-L3750CDW/MFC-L3770CDW

If you have not set up your Station ID, you cannot enter Fax Transfer mode.

1. Press [Settings] > [All Settings] > [Service] > [Data Transfer] > [Fax Transfer].
2. Do one of the following:
   - If the LCD displays [No Data], there are no faxes left in the machine's memory. Press [Close].
   - Enter the fax number to which faxes will be forwarded.
3. Press [Fax Start].

Related Information

- Transfer Your Faxes or Fax Journal Report

Related Topics:

- Set Your Station ID

Transfer Faxes to Your Computer

Related Models: MFC-L3710CW/MFC-L3735CDN/MFC-L3745CDW/MFC-L3750CDW/MFC-L3770CDW

1. Make sure you have installed the software and drivers on your computer, and then turn on **PC-FAX Receive** on the computer.

   Do one of the following:

   - (Windows 7)

     From the (**Start**) menu, select **All Programs** > **Brother** > **Brother Utilities**.

     Click the drop-down list and select your model name (if not already selected). Click **PC-FAX** in the left navigation bar, and then click **Receive**.
   - (Windows 8 and Windows 10)

     Click (**Brother Utilities**), and then click the drop-down list and select your model name (if not already selected). Click **PC-FAX** in the left navigation bar, and then click **Receive**.
2. Make sure you have set `[PC Fax Receive]` on the machine.

   If faxes are in the machine's memory when you set up PC-Fax Receive, the LCD displays `[Send Fax to PC?]`.
3. Do one of the following:
   - To transfer all faxes to your computer, press `[Yes]`.
   - To exit and leave the faxes in the memory, press `[No]`.
4. Press .

Related Information

- Transfer Your Faxes or Fax Journal Report

Transfer the Fax Journal Report to Another Fax Machine

Related Models: MFC-L3710CW/MFC-L3735CDN/MFC-L3745CDW/MFC-L3750CDW/MFC-L3770CDW

If you have not set up your Station ID, you cannot enter fax transfer mode.

1. Press [Settings] > [All Settings] > [Service] > [Data Transfer] > [Report Transfer].
2. Enter the fax number to which the Fax Journal will be forwarded.
3. Press [Fax Start].

Related Information

- Transfer Your Faxes or Fax Journal Report

Related Topics:

- Set Your Station ID

Error Messages When Using the Brother Web Connect Feature

Your Brother machine displays an error message if an error occurs. The most common error messages are shown in the table.

You can correct most errors yourself. If, after reading this table, you still need help, the Brother Solutions Center offers the latest troubleshooting tips.

Go to the Brother Solutions Center at support.brother.com.

Connection Error

Error Messages	Cause	Action
`Connection Error 02` `Network connection failed. Verify that the network connection is good.`	The machine is not connected to a network.	• Verify that the network connection is good. • If the `Web` button was pressed soon after the machine was turned on, the network connection may not have been established yet. Wait and try again.
`Connection Error 03` `Connection failed to server. Check network settings.`	• Network or server settings are incorrect. • There is a problem with the network or server.	• Confirm that network settings are correct, or wait and try again later. • If the `Web` button was pressed soon after the machine was turned on, the network connection may not have been established yet. Wait and try again.
`Connection Error 07` `Connection failed to server. Wrong Date&Time.`	Date and time settings are incorrect.	Set the date and time correctly. Note that if the machine's power cord is disconnected, the date and time settings may have reset to factory settings.

Authentication Error

Error Messages	Cause	Action
`Authentication Error 01` `Incorrect PIN code. Enter PIN correctly.`	The PIN you entered to access the account is incorrect. The PIN is the four-digit number that was entered when registering the account to the machine.	Enter the correct PIN.
`Authentication Error 02` `Incorrect or expired ID, or this temporary ID is already used. Enter correctly or reissue temporary ID. Temporary ID is valid for 24 hours after it is issued.`	The temporary ID that was entered is incorrect.	Enter the correct temporary ID.
	The temporary ID that was entered has expired. A temporary ID is valid for 24 hours.	Apply for Brother Web Connect access again and receive a new temporary ID, and then use the new ID to register the account to the machine.
`Authentication Error 03` `Display name has already been registered. Enter another display name.`	The name you entered as the display name has already been registered to another service user.	Enter a different display name.

Server Error

Error Messages	Cause	Action
Server Error 01 Authentication failed. Do the following: 1. Go to http://bwc.brother.com to get a new temporary ID. 2. Press OK and enter your new temporary ID in the next screen.	The machine's authentication information (needed to access the service) has expired or is invalid.	Apply for Brother Web Connect access again to receive a new temporary ID, and then use the new ID to register the account to the machine.
Server Error 03 Failed to upload. Unsupported file or corrupt data. Confirm data of file.	The file you are trying to upload may have one of the following problems: • The file exceeds the service's limit on number of pixels, file size, etc. • The file type is not supported. • The file is corrupted.	The file cannot be used: • Check the service's size or format restrictions. • Save the file as a different type. • If possible, get a new, uncorrupted version of the file.
Server Error 13 Service temporarily unavailable. Try again later.	There is a problem with the service and it cannot be used now.	Wait and try again. If you get the message again, access the service from a computer to confirm if it is unavailable.

Shortcut Error

Error Messages	Cause	Action
Shortcut Error 02 Account is invalid. Please register account and shortcut again after deleting this shortcut.	The shortcut cannot be used because the account was deleted after the shortcut was registered.	Delete the shortcut, and then register the account and shortcut again.

Related Information

- Troubleshooting

Document Jams

Related Models: DCP-L3551CDW/MFC-L3710CW/MFC-L3735CDN/MFC-L3745CDW/MFC-L3750CDW/MFC-L3770CDW

- Document is Jammed in the Top of the ADF Unit
- Document is Jammed under the Document Cover
- Remove Small Scraps of Paper Jammed in the ADF

Document is Jammed in the Top of the ADF Unit

Related Models: DCP-L3551CDW/MFC-L3710CW/MFC-L3735CDN/MFC-L3745CDW/MFC-L3750CDW/MFC-L3770CDW

1. Remove any paper from the ADF that is not jammed.
2. Open the ADF cover.
3. Pull the jammed document out to the left. If the document rips or tears, be sure you remove any debris or scraps to prevent future jams.

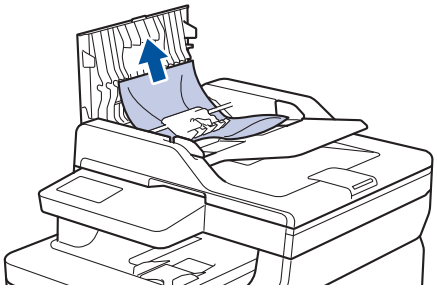

4. Close the ADF cover.
5. Do one of the following:
   - (DCP-L3551CDW)

     Press **Stop/Exit**.
   - (MFC-L3710CW/MFC-L3735CDN/MFC-L3745CDW/MFC-L3750CDW/MFC-L3770CDW)

     Press ✕.

Related Information

- Document Jams

Document is Jammed under the Document Cover

Related Models: DCP-L3551CDW/MFC-L3710CW/MFC-L3735CDN/MFC-L3745CDW/MFC-L3750CDW/MFC-L3770CDW

1. Remove any paper from the ADF that is not jammed.
2. Lift the document cover.
3. Pull the jammed document out to the right. If the document rips or tears, be sure you remove any debris or scraps to prevent future jams.

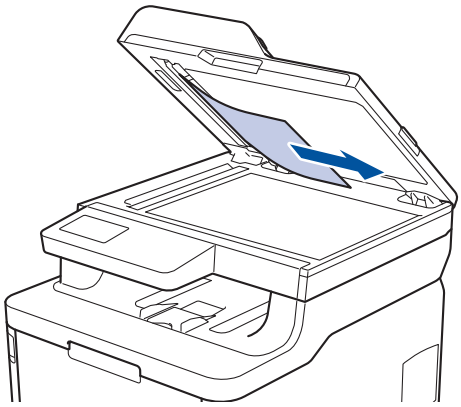

4. Close the document cover.
5. Do one of the following:
   - (DCP-L3551CDW)

     Press **Stop/Exit**.
   - (MFC-L3710CW/MFC-L3735CDN/MFC-L3745CDW/MFC-L3750CDW/MFC-L3770CDW)

     Press .

Related Information

- Document Jams

Remove Small Scraps of Paper Jammed in the ADF

Related Models: DCP-L3551CDW/MFC-L3710CW/MFC-L3735CDN/MFC-L3745CDW/MFC-L3750CDW/MFC-L3770CDW

1. Lift the document cover.
2. Insert a piece of stiff paper, such as cardstock, into the ADF to push any small paper scraps through.

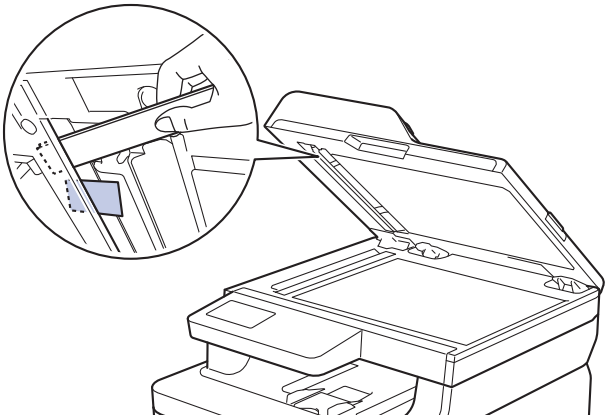

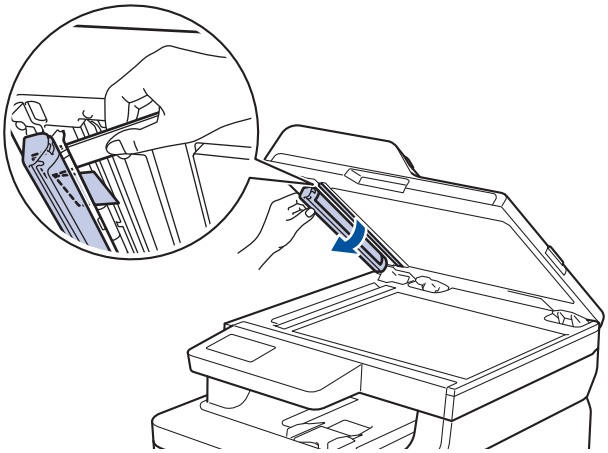

3. Close the document cover.
4. Do one of the following:
   - (DCP-L3551CDW)
     Press **Stop/Exit**.
   - (MFC-L3710CW/MFC-L3735CDN/MFC-L3745CDW/MFC-L3750CDW/MFC-L3770CDW)
     Press ✕.

Related Information

- Document Jams

Paper Jams

Always remove the remaining paper from the paper tray and straighten the stack when you are adding new paper. This helps prevent multiple sheets of paper from feeding through the machine at one time and prevents paper jams.

- Paper is Jammed in the MP tray
- Paper is Jammed in the Manual Feed Slot
- Paper is Jammed in the Paper Tray
- Paper is Jammed in the Output Paper Tray
- Paper is Jammed in the Back of the Machine
- Paper is Jammed Inside the Machine
- Paper is Jammed underneath the Paper Tray

Paper is Jammed in the MP tray

Related Models: MFC-L3770CDW

If the machine's control panel or the Status Monitor indicates that there is a jam in the machine's MP tray, follow these steps:

1. Remove the paper from the MP tray.
2. Remove any jammed paper from in and around the MP tray.

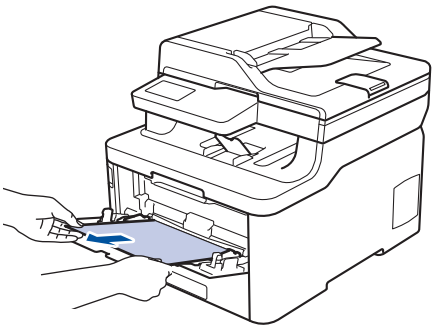

3. Fan the paper stack, and then put it back in the MP tray.
4. Reload paper in the MP tray and make sure the paper stays under the maximum paper height guides (1) on both sides of the tray.

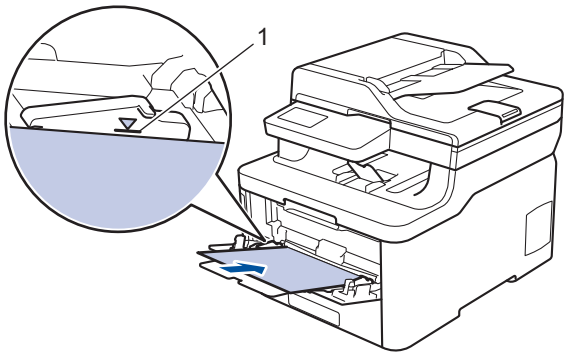

5. Follow the instructions on the machine's LCD.

Related Information

- Paper Jams

Paper is Jammed in the Manual Feed Slot

Related Models: DCP-L3510CDW/DCP-L3551CDW/MFC-L3710CW/MFC-L3735CDN/MFC-L3745CDW/MFC-L3750CDW

If the machine's control panel or the Status Monitor indicates that there is a jam in the machine's manual feed slot, follow these steps:

1. Gently remove any paper that is jammed in or around the manual feed slot.

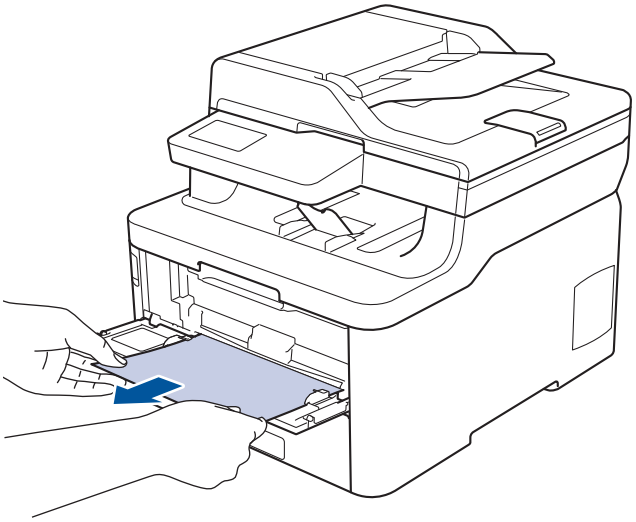

2. Reload the paper into the manual feed slot.
3. Do one of the following:
   - DCP-L3510CDW/DCP-L3551CDW

     Press **Mono Start** or **Colour Start** to resume printing.
   - MFC-L3710CW/MFC-L3735CDN/MFC-L3745CDW/MFC-L3750CDW

     Press `[Retry]` to resume printing.

Related Information

- Paper Jams

Paper is Jammed in the Paper Tray

If the machine's control panel or the Status Monitor indicates that there is a jam in the paper tray, follow these steps:

1. Pull the paper tray completely out of the machine.

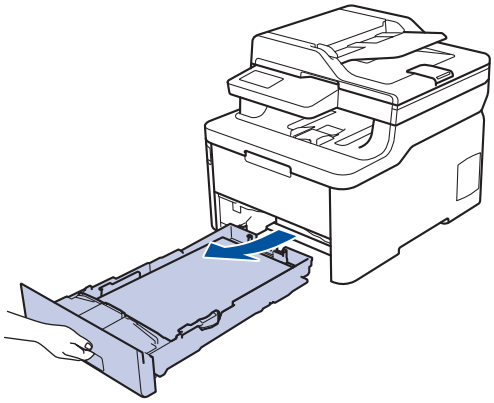

2. Slowly pull out the jammed paper.

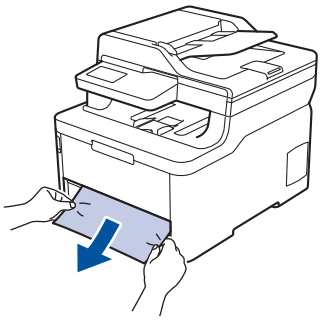

Pulling the jammed paper downward using both hands allows you to remove the paper more easily.

3. Fan the stack of paper to prevent further jams, and slide the paper guides to fit the paper size.

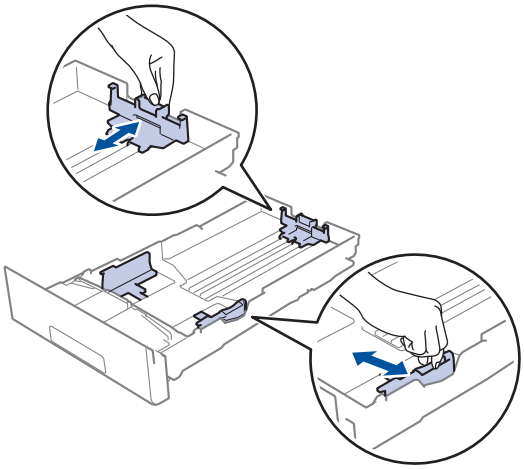

4. Make sure the paper is below the maximum paper mark (▼▼▼).

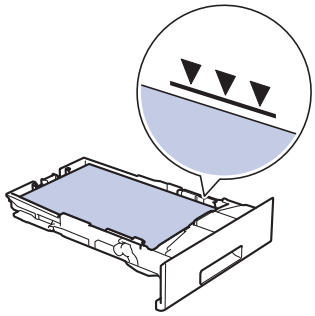

5. Put the paper tray firmly back in the machine.

Related Information

- Paper Jams

Paper is Jammed in the Output Paper Tray

When the paper is jammed in the output paper tray, follow these steps:

1. Use both hands to open the scanner.

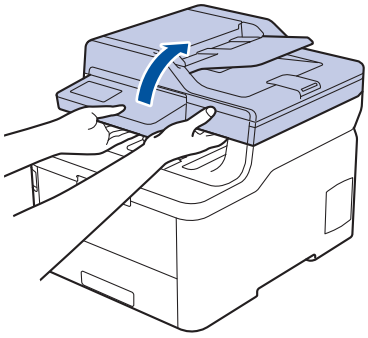

2. Remove the paper.

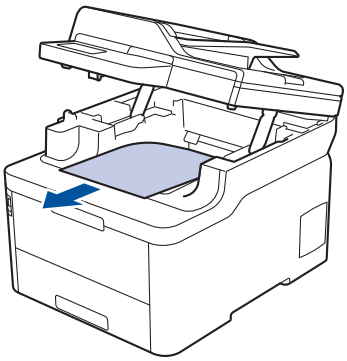

3. Push the scanner down with both hands to close it.

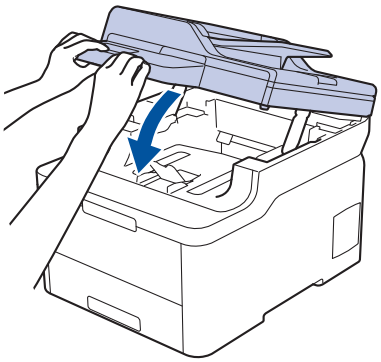

Related Information

- Paper Jams

Paper is Jammed in the Back of the Machine

If the machine's control panel or the Status Monitor indicates that there is a jam in the back (Rear) of the machine, follow these steps:

1. Leave the machine turned on but do not use it for 10 minutes to allow its internal fan to cool the extremely hot parts inside the machine.
2. Open the back cover.

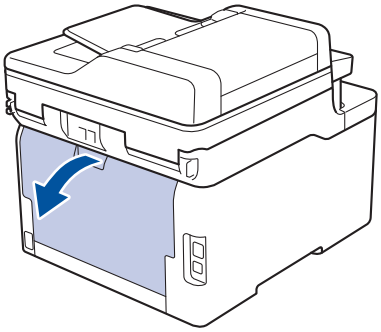

3. Pull the green tabs at the left and right sides toward you to release the fuser cover.

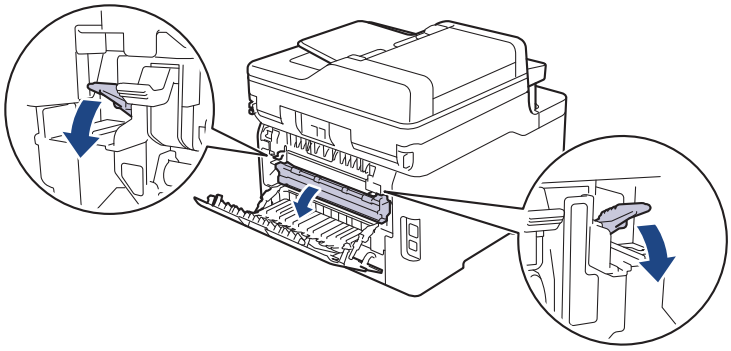

WARNING

HOT SURFACE

The machine's internal parts will be extremely hot. Wait for the machine to cool down before touching them.

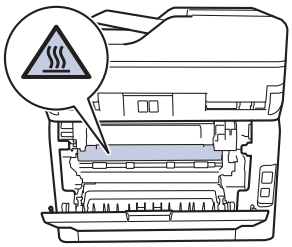

If the grey envelope levers inside the back cover are pulled down to the envelope position, lift these levers to the original position before pulling the green tabs down.

4. Use both hands to gently pull the jammed paper out of the fuser unit.

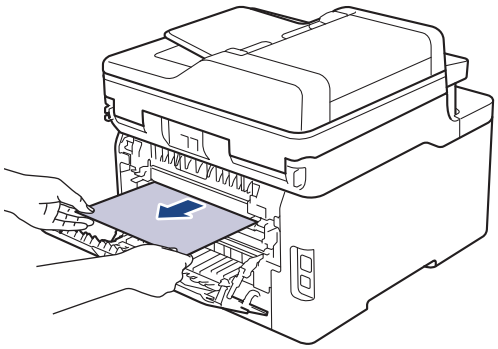

5. Close the fuser cover.

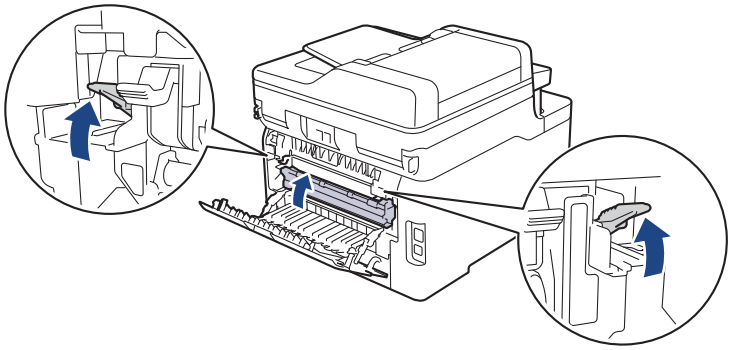

If you print on envelopes, pull down the grey envelope levers to the envelope position again before closing the back cover.

6. Close the back cover until it locks in the closed position.

Related Information

- Paper Jams

Paper is Jammed Inside the Machine

If the machine's control panel or the Status Monitor indicates that there is a jam inside the machine, follow these steps:

1. Leave the machine turned on but do not use it for 10 minutes to allow its internal fan to cool the extremely hot parts inside the machine.
2. Open the top cover until it locks in the open position.

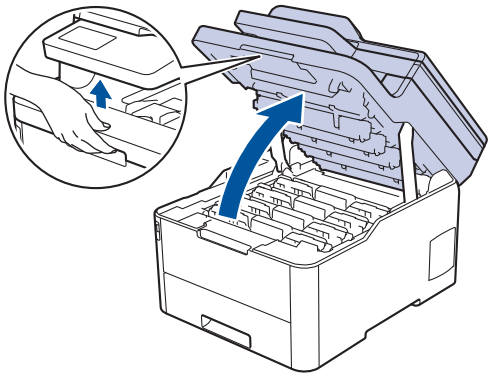

WARNING

HOT SURFACE

The machine's internal parts will be extremely hot. Wait for the machine to cool down before touching them.

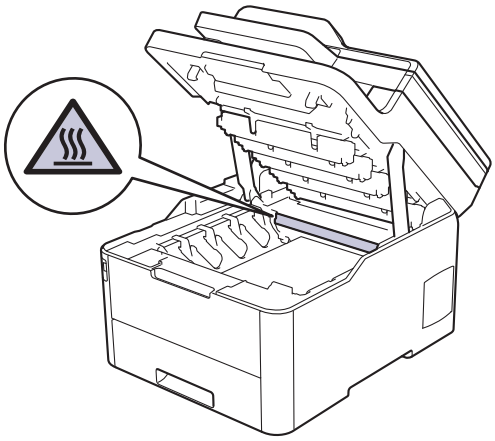

3. Remove all of the toner cartridge and drum unit assemblies.

CAUTION

We recommend placing the toner cartridge and drum unit assemblies on a clean, flat surface with disposable paper underneath it in case you accidentally spill or scatter toner.

IMPORTANT

To prevent damage to the machine from static electricity, DO NOT touch the electrodes shown in the illustration.

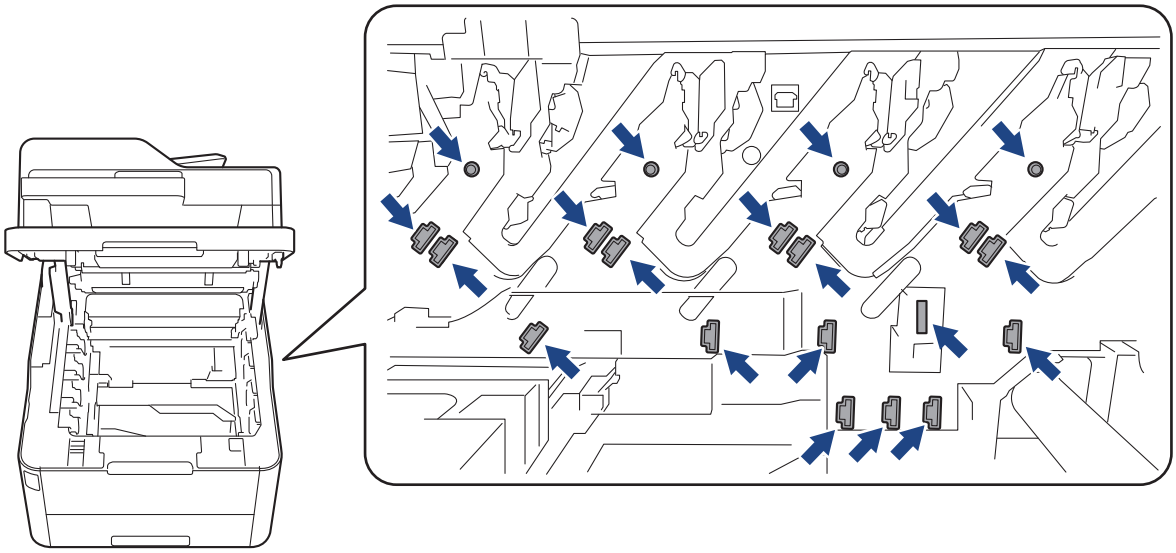

4. Gently remove the jammed paper slowly.

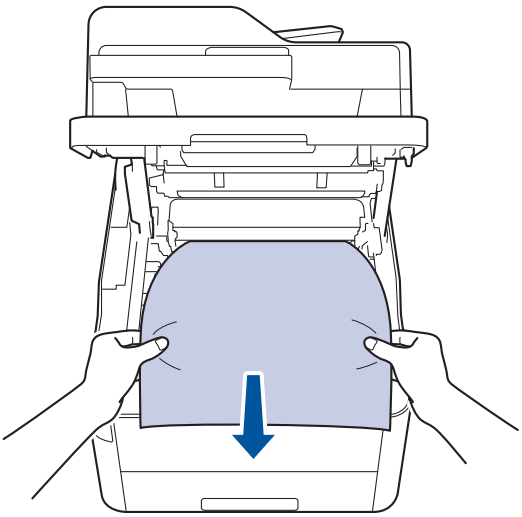

5. Reinsert each toner cartridge and drum unit assembly into the machine. Make sure that you match the toner cartridge colour to the same colour label on the machine for all four toner cartridge and drum unit assemblies.

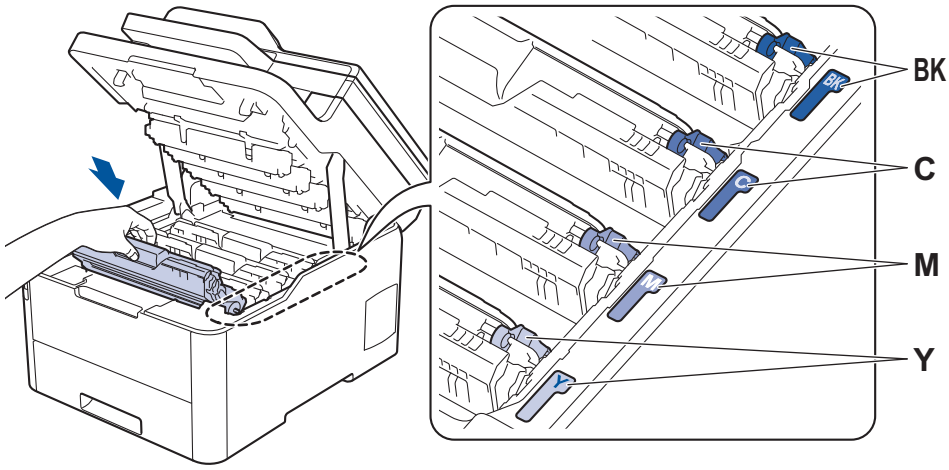

6. Close the machine's top cover.

Related Information

- Paper Jams

Paper is Jammed underneath the Paper Tray

If the machine's control panel or the Status Monitor indicates that there is a jam in the paper tray, follow these steps:

1. Leave the machine turned on but do not use it for 10 minutes to allow its internal fan to cool the extremely hot parts inside the machine.
2. Pull the paper tray completely out of the machine.

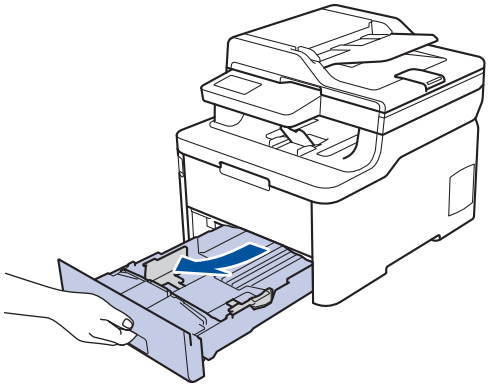

3. Make sure the jammed paper does not remain inside the machine.

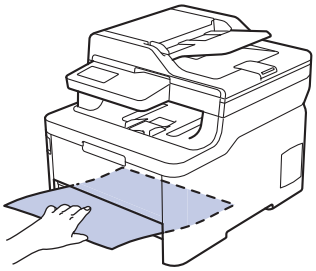

4. If paper is not jammed inside the machine, remove the paper from the paper tray, flip it over, and check underneath the paper tray.

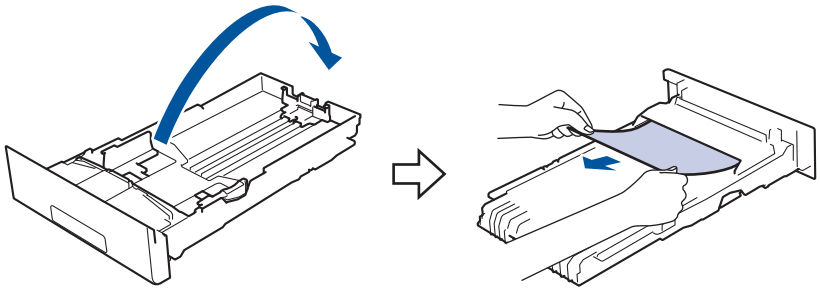

5. If the paper is not jammed in the paper tray, open the back cover.

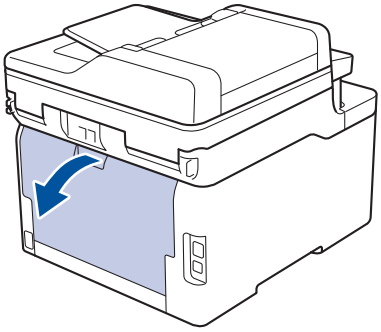

WARNING

HOT SURFACE

The machine's internal parts will be extremely hot. Wait for the machine to cool down before touching them.

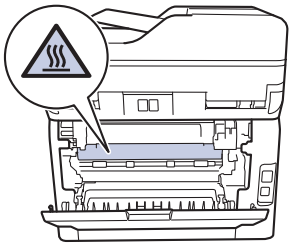

6. Use both hands to gently pull the jammed paper out of the back of the machine.

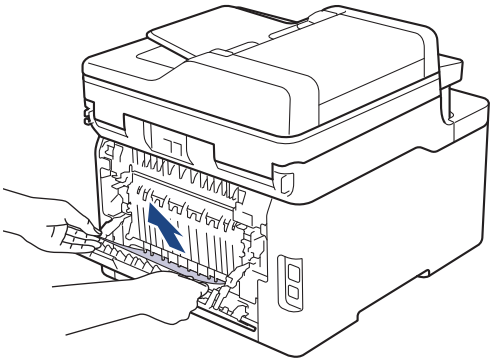

7. Close the back cover until it locks in the closed position.
8. Put the paper tray firmly back in the machine.

Related Information

- Paper Jams

Printing Problems

If, after reading this table, you still need help, go to the Brother Solutions Center at support.brother.com.

Difficulties	Suggestions
No printout	Check the machine is not in Power Off mode. If the machine is in Power Off mode, press on the control panel, and then send the print data again.
	Check that the correct printer driver has been installed and selected.
	Check to see if the Status Monitor or the machine's control panel displays an error status.
	Check that the machine is online: • Windows7 and Windows Server 2008 R2 Click **(Start)** >**Devices and Printers** . Right-click **Brother XXX-XXXX** and click **See what's printing**. Click **Printer** in the menu bar. Make sure **Use Printer Offline** is not selected. • Windows Server 2008 Click **(Start)** >**Control Panel** > **Hardware and Sound** > **Printers**. Right-click **Brother XXX-XXXX**. Make sure **Use Printer Online** is not listed. If it is listed, click this option to set the driver Online. • Windows 8 and Windows Server 2012 Move your mouse to the lower right corner of your desktop. When the menu bar appears, click **Settings** > **Control Panel**. In the **Hardware and Sound** group, click **Devices and Printers**. Right-click the **Brother XXX-XXXX**. Click **See what's printing**. If printer driver options appear, select your printer driver. Click **Printer** in the menu bar and make sure that **Use Printer Offline** is not selected. • Windows 10 and Windows Server 2016 Click > **Windows System** > **Control Panel**. In the **Hardware and Sound** group, click **View devices and printers**. Right-click the **Brother XXX-XXXX**. Click **See what's printing**. If printer driver options appear, select your printer driver. Click **Printer** in the menu bar and make sure that **Use Printer Offline** is not selected. • Windows Server 2012 R2 Click **Control Panel** on the **Start** screen. In the **Hardware** group, click **View devices and printers**. Right-click the **Brother XXX-XXXX**. Click **See what's printing**. If printer driver options appear, select your printer driver. Click **Printer** in the menu bar and make sure **Use Printer Offline** is not selected.
	• Mac Click the **System Preferences** menu, and then select the **Printers & Scanners** option. When the machine is offline, delete it using the button, and then add it using the button.

Difficulties	Suggestions
The machine is not printing or has stopped printing.	Cancel the print job and clear it from the machine's memory. The printout may be incomplete. Send the print data again. See *Related Information*:*Cancel a Print Job.*
The headers or footers appear when the document displays on the screen but they do not show up when it is printed.	There is an unprintable area on the top and bottom of the page. Adjust the top and bottom margins in your document to allow for this.
The machine prints unexpectedly or it prints garbage.	Cancel the print job and clear it from the machine's memory. The printout may be incomplete. Send the print data again. See *Related Information*:*Cancel a Print Job.*
	Check the settings in your application to make sure they are set up to work with your machine.
	Confirm that the Brother printer driver is selected in your application's Print window.
The machine prints the first couple of pages correctly, then some pages have missing text.	Check the settings in your application to make sure they are set up to work with your machine.
	Your machine is not receiving all of the data sent from the computer. Make sure you connected the interface cable correctly.
The machine does not print on both sides of the paper even though the printer driver setting is 2-sided and the machine supports automatic 2-sided printing.	Check the paper size setting in the printer driver. You must select A4 paper. Supported paper weight is 60 to 163 g/m².
Print speed is too slow.	Try changing the printer driver setting. The highest resolution needs longer data processing, sending and printing time.
	If you have enabled the Quiet Mode, disable the Quiet Mode on the printer driver or the machine's menu setting.
The machine does not feed paper.	If there is paper in the paper tray, make sure it is straight. If the paper is curled, straighten it. Sometimes it is helpful to remove the paper, turn the stack over and place it back in the paper tray.
	Reduce the amount of paper in the paper tray, and then try again.
	(For models with MP Tray)Make sure **MP Tray** is not selected for **Paper Source** in the printer driver. (For models with Manual Feed Slot)Make sure **Manual** is not selected for **Paper Source** in the printer driver.
	Clean the paper pick-up rollers.
The machine does not feed paper from the MP tray. (For models with MP Tray)	Fan the paper well and place it back in the MP tray firmly.
	Make sure **MP Tray** is selected as **Paper Source** in the printer driver.
The machine does not feed paper from the Manual feed slot. (For models with Manual Feed Slot)	Use both hands to push one sheet of paper firmly into the manual feed slot until the top edge of the paper presses against the paper feed rollers. Continue pressing the paper against the rollers until the machine grabs the paper and pulls it in further.
	Put only one sheet of paper in the manual feed slot.
	Make sure **Manual** is selected as **Paper Source** in the printer driver.
The machine does not feed envelopes.	(For models with Manual Feed Slot)Load one envelope at a time in the manual feed slot. Your application must be set to print the envelope size you are using. This is

Difficulties	Suggestions
	usually done in the Page Setup or Document Setup menu of your application. (For models with MP Tray)Load envelopes in the MP tray. Your application must be set to print the envelope size you are using. This is usually done in the Page Setup or Document Setup menu of your application.

Related Information

- Troubleshooting

Related Topics:

- Monitor the Status of the Machine from Your Computer (Windows)
- Monitor the Status of the Machine from Your Computer (Mac)
- Cancel a Print Job
- Load and Print Using the Paper Tray
- Clean the Paper Pick-up Rollers
- Load and Print Using the Multi-purpose Tray (MP Tray)

Improve the Print Quality

If you have a print quality problem, print a test page first. If the printout looks good, the problem is probably not the machine. Check the interface cable connections and try printing a different document. If the printout or test page printed from the machine has a quality problem, check the examples of poor print quality and follow the recommendations in the table.

IMPORTANT

Using non-genuine supplies may affect the print quality, hardware performance, and machine reliability.

1. To get the best print quality, we suggest using recommended print media. Make sure you use paper that meets our specifications.
2. Check that the toner cartridge and drum unit assemblies are installed correctly.

Examples of poor print quality	Recommendation
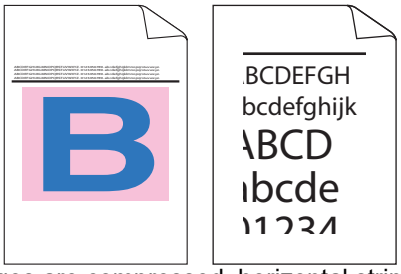 Printed pages are compressed, horizontal stripes appear, or characters in the top, bottom, left, or right margins are cut off	Adjust the print margins in your document's application and reprint the job.
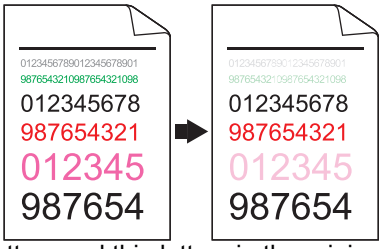 Coloured letters and thin letters in the original document are light or faint in the copy	• Choose `Text` or `Receipt` in the copy quality setting. • Adjust the copy density and contrast.
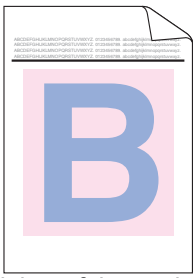 Colours are light or faint on the whole page	• Use the machine's LCD to perform calibration.See *Related Information*: *Calibrate Colour Output*. • Adjust the copy density and contrast if you are copying. • Make sure Toner Save mode is off in the LCD or the printer driver. See *Related Information*: *Reduce Toner Consumption*. • Make sure the media type setting in the printer driver matches the type of paper you are using. • Shake all four toner cartridges gently. • Wipe the windows of all four LED heads with a dry, soft lint-free cloth. See *Related Information*: *Clean the LED Heads*.

Examples of poor print quality	Recommendation
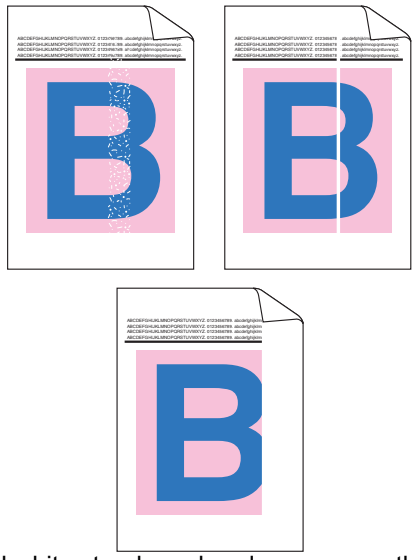 Vertical white streaks or bands appear on the page	• Wipe the windows of all four LED heads with a dry, soft lint-free cloth. • Wipe the scanner glass strip with a dry lint free soft cloth. • Make sure foreign material such as a torn piece of paper, sticky notes, or dust is not inside the machine or around the toner cartridge and drum unit assemblies.
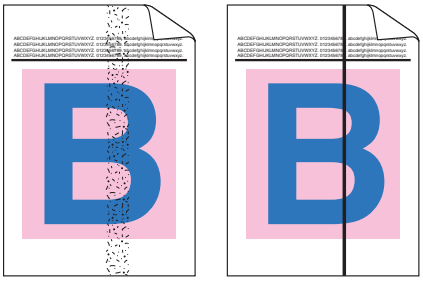 Vertical coloured streaks or bands appear on the page	• Wipe the scanner glass strip with a dry lint free soft cloth. • Clean all four corona wires (one for each colour) inside the drum unit by sliding the green tab. Make sure the green tab of the corona wire is in the home position (1). 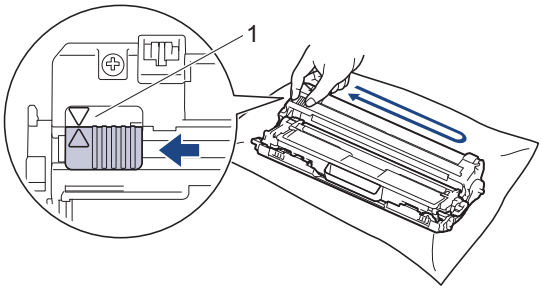 • Replace the toner cartridge that matches the colour of the streak or band. To identify the colour of the toner cartridge, visit the Brother Solutions Center at support.brother.com and view the **FAQs & Troubleshooting** page for your Brother model. See *Related Information*: *Replace the Toner Cartridge*. • Install a new drum unit. See *Related Information*: *Replace the Drum Unit*.
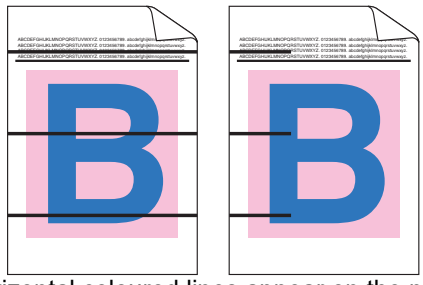 Horizontal coloured lines appear on the page	• Identify the colour causing the problem and replace the toner cartridge that matches the colour of the line. To identify the colour of the toner cartridge, visit the Brother Solutions Center at support.brother.com to see the **FAQs & Troubleshooting** page. See *Related Information*: *Replace the Toner Cartridge*. • Install a new drum unit. See *Related Information*: *Replace the Drum Unit*.

Examples of poor print quality	Recommendation
 White spots	• Make sure the media type setting in the printer driver matches the type of paper you are using. • Check the machine's environment. Conditions such as high humidity and high temperatures may cause this print quality problem. • If the problem is not solved after printing a few pages, the drum may have foreign material, such as glue from a label, stuck on the drum surface. Clean the drum unit. See *Related Information*: *Clean the Drum Unit*. • Install a new drum unit. See *Related Information*: *Replace the Drum Unit*.
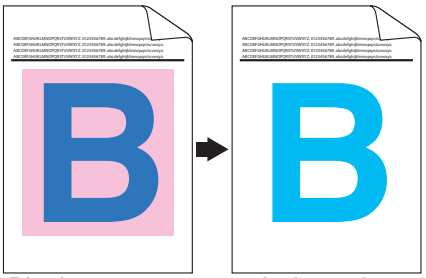 Blank page or some missing colours	• Identify the colour causing the problem and install a new toner cartridge. To identify the colour of the toner cartridge, visit the Brother Solutions Center at support.brother.com to see the **FAQs & Troubleshooting** page. See *Related Information*: *Replace the Toner Cartridge*. • Install a new drum unit. See *Related Information*: *Replace the Drum Unit*.
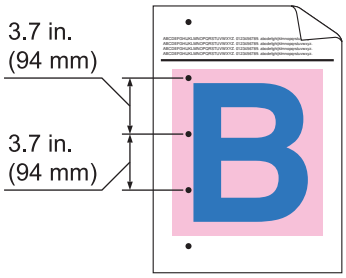 Coloured spots at 94 mm	• If the problem is not solved after printing a few pages, the drum may have foreign material, such as glue from a label, stuck on the drum surface. Clean the drum unit. See *Related Information*: *Clean the Drum Unit.* • Install a new drum unit. See *Related Information*: *Replace the Drum Unit*.
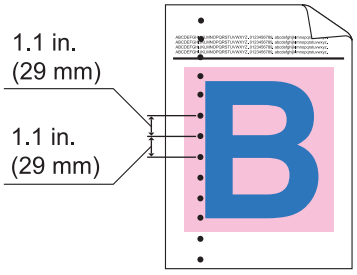 Coloured spots at 29 mm	• Identify the colour causing the problem and install a new toner cartridge. To identify the colour of the toner cartridge, visit the Brother Solutions Center at support.brother.com to see the **FAQs & Troubleshooting** page. See *Related Information*: *Replace the Toner Cartridge*.
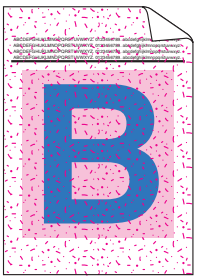 Toner scatter or toner stain	• Check the machine's environment. Conditions such as high humidity and high temperatures may cause this print quality problem. • Identify the colour causing the problem and put in a new toner cartridge. To identify the colour of the toner cartridge, visit the Brother Solutions Center at support.brother.com to see the **FAQs & Troubleshooting** page. See *Related Information*: *Replace the Toner Cartridge*. • Install a new drum unit. See *Related Information*: *Replace the Drum Unit*.
The colour of your printouts is not what you expected	• To improve the colour density, calibrate the colours using the LCD. • To adjust the print position of colours for sharper edges, perform the colour registration using the LCD.

Examples of poor print quality	Recommendation
	• Adjust the copy density and contrast if you are copying. • Make sure Toner Save mode is off in the LCD or the printer driver. • If the print quality of the black portion is not what you expected, select the **Enhance Black Printing** check box in the printer driver. • Clear the **Improve Gray Color** check box in the printer driver. • Identify the colour causing the problem and put in a new toner cartridge. To identify the colour of the toner cartridge, visit the Brother Solutions Center at support.brother.com to see the **FAQs & Troubleshooting** page. See *Related Information*: *Replace the Toner Cartridge*. • Install a new drum unit. See *Related Information*: *Replace the Drum Unit*.
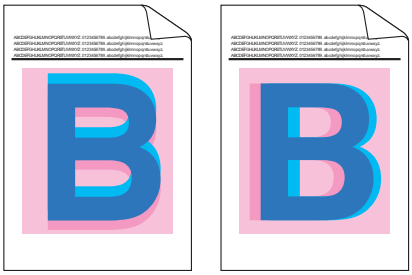 Colour offset	• Make sure the machine is on a solid level surface. • Perform the colour registration using the LCD. • Install a new drum unit. See *Related Information*: *Replace the Drum Unit*. • Install a new belt unit. See *Related Information*: *Replace the Belt Unit*.
 Uneven colour density across the page	• Perform the calibration using the LCD. • Adjust the copy density and contrast if you are copying. • Clear the **Improve Gray Color** check box in the printer driver. • Identify the colour causing the problem and put in a new toner cartridge. To identify the colour of the toner cartridge, visit the Brother Solutions Center at support.brother.com to see the **FAQs & Troubleshooting** page. See *Related Information*: *Replace the Toner Cartridge*. • Install a new drum unit. See *Related Information*: *Replace the Drum Unit*.
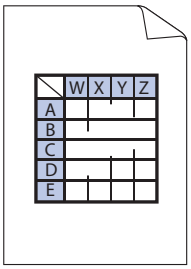 Missing thin lines in images	• Make sure Toner Save mode is off in the LCD or the printer driver. • Change the print resolution. • If you use a Windows printer driver, select **Improve Pattern Printing** in Print Setting of the **Basic** tab.

Examples of poor print quality	Recommendation
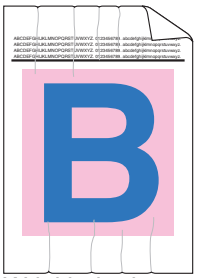 Wrinkled printout	• Check the paper type and quality. • Make sure the back cover is closed correctly. • Make sure the two grey levers inside the back cover are in the up position. • Make sure the media type setting in the printer driver matches the type of paper you are using.
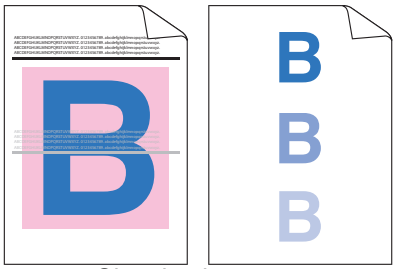 Ghosting images	• Check the machine's environment. Conditions such as low humidity and low temperatures may cause this print quality problem. • Make sure the media type setting in the printer driver matches the type of paper you are using. • Make sure the two grey levers inside the back cover are in the up position. • Install a new drum unit. See *Related Information*: *Replace the Drum Unit*.
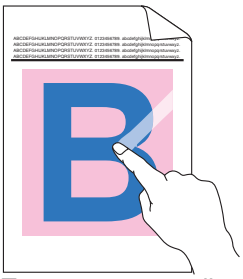 Toner smears easily	• Make sure the two grey levers inside the back cover are in the up position. • Make sure the media type setting in the printer driver matches the type of paper you are using. • Select **Improve Toner Fixing** mode in the printer driver. If this selection does not provide enough improvement, change the printer driver setting in **Media Type** to a thick setting. If you are printing an envelope, select **Env. Thick** in the media type setting.
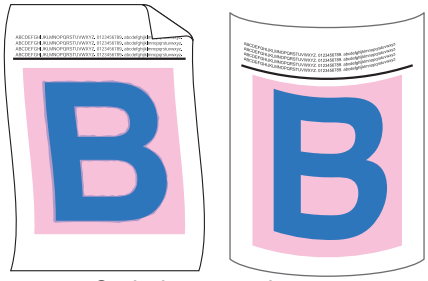 Curled or wavy image	• Select **Reduce Paper Curl** mode in the printer driver. If the problem is not solved, select **Plain Paper** in the media type setting. • If you are printing an envelope, select **Env. Thin** in the Media Type Setting of the printer driver. • If you do not use the machine often, the paper may have been in the paper tray too long. Turn over the stack of paper in the paper tray. Also, fan the paper stack and then rotate the paper 180° in the paper tray. • Store the paper where it will not be exposed to high temperatures and high humidity. • Open the back cover (Face up output tray) to let the printed paper exit onto the Face up output tray.
  Envelope creases	• Make sure the envelope levers inside the back cover are pulled down to the envelope position when you print envelopes. **NOTE** When you have finished printing, open the back cover and reset the two grey levers back to their original position (1) by lifting them up until they stop.

Examples of poor print quality	Recommendation
	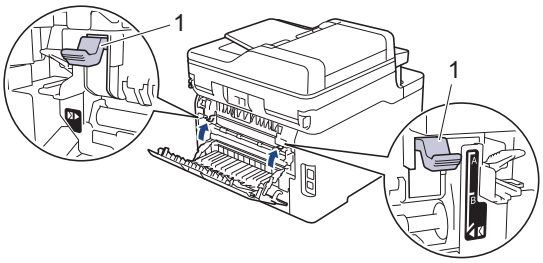 • (For models with MP Tray) If creases occur with the envelope levers in the envelope position, print with the back cover open and feed one envelope at a time from the MP tray.

Related Information

- Troubleshooting

Related Topics:

- Test Print
- Clean the Drum Unit
- Calibrate Colour Output
- Reduce Toner Consumption
- Replace the Toner Cartridge
- Replace the Drum Unit
- Replace the Belt Unit
- Clean the LED Heads

Telephone and Fax Problems

Related Models: MFC-L3710CW/MFC-L3735CDN/MFC-L3745CDW/MFC-L3750CDW/MFC-L3770CDW

Telephone Line or Connections

Difficulties	Suggestions
Dialling does not work. (No dial tone)	Check all line cord connections. Make sure the telephone line cord is plugged into the telephone wall socket and the LINE socket of the machine. Make sure your machine has a dial tone by pressing the Hook button in Fax mode. If you subscribe to DSL, VoIP or magicJack services, contact your service provider for connection instructions.
	(Available only for some countries.) Change the Tone/Pulse setting.
	Send a manual fax by pressing Hook button, and dialing the number. Wait to hear fax-receiving tones before pressing Start button.
	If there is no dial tone, connect a known working telephone and telephone line cord to the socket. Then lift the external telephone's handset and listen for a dial tone. If there is still no dial tone, ask your telephone company to check the line and/or wall socket.
The machine does not answer when called.	Make sure the machine is in the correct receive mode for your setup. Check for a dial tone. If possible, call your machine to hear it answer. If there is still no answer, check that the telephone line cord is plugged into the telephone wall socket and the LINE socket of the machine. Make sure your machine has a dial tone by pressing the Hook button in Fax mode. If there is no ringing when you call your machine, ask your telephone company to check the line.

Handling Incoming Calls

Difficulties	Suggestions
Sending a Fax Call to the machine.	If you answered on an extension telephone, press your Fax Receive Code (the factory setting is *51). If you answered on the external telephone (connected to the EXT. jack), press the Start button to receive the fax. When your machine answers, hang up.
Custom features on a single line.	If you have Call Waiting, Call Waiting/Caller ID, Caller ID, Voice Mail, an answering machine, an alarm system or other custom feature on a single telephone line with your machine, it may create a problem sending or receiving faxes. **For Example:** If you subscribe to Call Waiting or some other custom service and its signal comes through the line while your machine is sending or receiving a fax, the signal can temporarily interrupt or disrupt the faxes. Brother's ECM (Error Correction Mode) feature should help overcome this problem. This condition is related to the telephone system industry and is common to all devices that send and receive information on a single, shared line with custom features. If avoiding a slight interruption is crucial to your business, we recommend using a separate telephone line with no custom features.

Receiving Faxes

Difficulties	Suggestions
Cannot receive a fax.	Check all line cord connections. Make sure the telephone line cord is plugged into the telephone wall socket and the LINE socket of the machine. If you subscribe to DSL, VoIP, or magicJack services, contact your service provider for connection instructions. If you are using a VoIP system, try changing the VoIP setting to *Basic (for VoIP)*. This will lower modem speed and turn off Error Correction Mode (ECM).
	Make sure your machine has a dial tone by pressing the Hook button in Fax mode. If you hear static or interference on your fax line, contact your local telephone provider.

Difficulties	Suggestions
Cannot receive a fax.	Make sure the machine is in the correct Receive Mode. This is determined by the external devices and telephone subscriber services you have on the same line as the Brother machine. • If you have a dedicated fax line and want your Brother machine to automatically answer all incoming faxes, you should select Fax only mode. • If your Brother machine shares a line with an external answering machine, you should select the External TAD mode. In External TAD mode, your Brother machine will receive incoming faxes automatically and voice callers will be able to leave a message on your answering machine. • If your Brother machine shares a line with other telephones and you want it to automatically answer all incoming faxes, you should select the Fax/Tel mode. In Fax/Tel mode, your Brother machine will receive faxes automatically and produce a pseudo/double-ring to alert you to answer voice calls. • If you do not want your Brother machine to answer any incoming faxes automatically, you should select the Manual mode. In Manual mode, you must answer every incoming call and activate the machine to receive faxes.
	Another device or service at your location may be answering the call before your Brother machine answers. To test this, lower the Ring Delay setting: • If the Receive Mode is set to Fax Only or Fax/Tel, reduce the Ring Delay to one ring. See *Related Information*: *Set the Number of Rings Before the Machine Answers (Ring Delay)*. • If the Receive Mode is set to External TAD, reduce the number of rings programmed on your answering machine to two. • If the Receive Mode is set to Manual, DO NOT adjust the Ring Delay setting.
	Have someone send you a test fax: • If you received the test fax successfully, your machine is operating correctly. Remember to reset your Ring Delay or answering machine setting back to your original setting. If receiving problems recur after resetting the Ring Delay, then a person, device, or subscriber service is answering the fax call before the machine has a chance to answer. • If you were not able to receive the fax, then another device or subscriber service may be interfering with your fax reception or there may be a problem with your fax line.
	If you are using a telephone answering machine (External TAD mode) on the same line as the Brother machine, make sure your answering machine is set up correctly. 1. Set your answering machine to answer in one or two rings. 2. Record the outgoing message on your answering machine. • Record five seconds of silence at the beginning of your outgoing message. • Limit your speaking to 20 seconds. • End your outgoing message with your Remote Activation Code for people sending manual faxes. For example: “After the beep, leave a message or press *51 and Start to send a fax.” 3. Set your answering machine to answer calls. 4. Set your Brother machine’s Receive Mode to External TAD. See *Related Information*: *Choose the Correct Receive Mode*.
	Make sure your Brother machine’s Easy Receive feature is turned On. Easy Receive is a feature that allows you to receive a fax even if you answered the call on an external or extension telephone.
	If you often get transmission errors due to possible interference on the telephone line or if you are using a VoIP system, try changing the Compatibility setting to *Basic(for VoIP)*.
	Contact your administrator to check your Secure Function Lock Settings.

Sending Faxes

Difficulties	Suggestions
Cannot send a fax.	Check all line cord connections. Make sure the telephone line cord is plugged into the telephone wall socket and the LINE socket of the machine. Make sure your machine has a dial tone by pressing the Hook button in Fax mode. If you subscribe to DSL, VoIP, or magicJack services, contact your service provider for connection instructions.
	Make sure you pressed Fax and the machine is in Fax mode.

Difficulties	Suggestions
Cannot send a fax.	Print the Transmission Verification Report and check for an error.
	Contact your administrator to check your Secure Function Lock Settings.
	Ask the other party to check that the receiving machine has paper.
Poor sending quality.	Try changing your resolution to Fine or S.Fine. Make a copy to check your machine's scanner operation. If the copy quality is poor, clean the scanner.
Transmission Verification Report says RESULT:NG.	There is probably temporary noise or static on the line. Try sending the fax again. If you are sending a PC-Fax message and get RESULT:NG on the Transmission Verification Report, your machine may be out of memory. To free up extra memory, you can turn off Fax Storage, print fax messages in memory or cancel a delayed fax. If the problem continues, ask the telephone company to check your telephone line.
	If you often get transmission errors due to possible interference on the telephone line or if you are using a VoIP system, try changing the Compatibility setting to Basic(for VoIP).
Sent faxes are blank.	Make sure you are loading the document correctly. When using the ADF, the document should be face up. When using the scanner glass, the document should be face down.
Vertical black lines when sending.	Black vertical lines on faxes you send are typically caused by dirt or correction fluid on the glass strip. Clean the glass strip.

Printing received faxes

Difficulties	Suggestions
• Condensed print • Horizontal streaks • Top and bottom sentences are cut off • Missing lines 	This is usually caused by a poor telephone connection. Make a copy; if your copy looks good, you probably had a bad connection, with static or interference on the telephone line. Ask the other party to send the fax again.
Vertical black lines when receiving	The corona wires for printing may be dirty.Clean the corona wires in the drum unit.
	The sender's scanner may be dirty. Ask the sender to make a copy to see if the problem is with the sending machine. Try receiving from another fax machine.
Received faxes appear as split or blank pages.	Left and right margins are cut off or a single page is printed on two pages.
	Turn on Auto Reduction.

Related Information

- Troubleshooting
  - Set Dial Tone Detection
  - Set Telephone Line Compatibility for Interference and VoIP Systems

Related Topics:

- Set the Number of Rings Before the Machine Answers (Ring Delay)
- Choose the Correct Receive Mode

Set Dial Tone Detection

Related Models: MFC-L3710CW/MFC-L3735CDN/MFC-L3745CDW/MFC-L3750CDW/MFC-L3770CDW

Setting the Dial Tone to [Detection] will shorten the Dial Tone detect pause.

1. Press [Settings] > [All Settings] > [Initial Setup] > [Dial Tone].
2. Press [Detection] or [No Detection]
3. Press .

Related Information

- Telephone and Fax Problems

Set Telephone Line Compatibility for Interference and VoIP Systems

Related Models: MFC-L3710CW/MFC-L3735CDN/MFC-L3745CDW/MFC-L3750CDW/MFC-L3770CDW

Problems sending and receiving faxes due to possible interference on the telephone line may be solved by reducing the modem speed to minimise errors in fax transmission. If you are using a Voice over IP (VoIP) service, Brother recommends changing the compatibility to Basic (for VoIP).

- VoIP is a type of phone system that uses an Internet connection, rather than a traditional phone line.
- Telephone providers frequently bundle VoIP together with Internet and cable services.

1. Press [Settings] > [All Settings] > [Initial Setup] > [Compatibility].
2. Press the option you want.
   - Select [High] to set the modem speed to 33600 bps.
   - Select [Normal] to set the modem speed to 14400 bps.
   - Select [Basic(for VoIP)] to reduce the modem speed to 9600 bps and turn off Error Correction Mode (ECM). Unless interference is a recurring problem on your telephone line, you may prefer to use this option only when needed.
3. Press .

Related Information

- Telephone and Fax Problems

Network Problems

- Error Messages
- Use the Network Connection Repair Tool (Windows)
- Where Can I Find My Brother Machine's Network Settings?
- I Cannot Complete the Wireless Network Setup Configuration
- My Brother Machine Cannot Print, Scan, or PC-FAX Receive over the Network
- I Want to Check that My Network Devices are Working Correctly

Error Messages

Your Brother machine will display an error message if an error occurs. The most common error messages are shown in the table.

>> DCP-L3510CDW/DCP-L3551CDW
>> MFC-L3710CW/MFC-L3735CDN/MFC-L3745CDW/MFC-L3750CDW/MFC-L3770CDW

DCP-L3510CDW/DCP-L3551CDW

Error Messages	Cause	Action
Cannot Connect Maximum limit of connected devices has been reached.	The maximum number of mobile devices are already connected to the Wi-Fi Direct network when the Brother machine is the Group Owner (G/O).	After the current connection between your Brother machine and another mobile device has shut down, try to configure the Wi-Fi Direct settings again. You can confirm the connection status by printing the Network Configuration Report.
Authentication Error, contact your administrator.	Your authentication setting for the Store Print Log to Network feature is not correct.	• Make sure the **Username** and **Password** in **Authentication Setting** are correct. If the username is part of a domain, enter the username in one of the following styles: user@domain or domain\user. • Make sure the time of the log file server matches the time from the SNTP server, or the **Date&Time** settings. • Make sure the SNTP time server settings are configured correctly so the time matches the time used for authentication by Kerberos or NTLMv2. If there is no SNTP server, make sure the **Date&Time** and **Time Zone** settings are set correctly using Web Based Management or the control panel so the machine matches the time being used by the server providing the authentication.
Connection Error	Other devices are trying to connect to the Wi-Fi Direct network at the same time.	Make sure there are no other devices trying to connect to the Wi-Fi Direct network, and then try to configure the Wi-Fi Direct settings again.
Connection Fail	The Brother machine and your mobile device cannot communicate during the Wi-Fi Direct network configuration.	• Move the mobile device closer to your Brother machine. • Move your Brother machine and the mobile device to an obstruction-free area. • If you are using the PIN Method of WPS, make sure you have entered the correct PIN.
File Access Error, contact your administrator.	The Brother machine cannot access the destination folder for the Store Print Log to Network feature.	• Make sure the stored directory name is correct. • Make sure the stored directory is write-enabled. • Make sure the file is not locked.
Log Access Error	In Web Based Management, you have selected the **Cancel Print** option in the **Error Detection Setting** of **Store Print Log to Network**.	Wait for about 60 seconds until this message disappears from the LCD.

Error Messages	Cause	Action
No Device	When configuring the Wi-Fi Direct network, the Brother machine cannot find your mobile device.	• Make sure your machine and mobile device are in the Wi-Fi Direct mode. • Move the mobile device closer to your Brother machine. • Move your Brother machine and the mobile device to an obstruction-free area. • If you are manually configuring the Wi-Fi Direct network, make sure you have entered the correct password. • If your mobile device has a configuration page for how to obtain an IP address, make sure the IP address of your mobile device has been configured via DHCP.
Server Timeout, contact your administrator.	The Brother machine cannot connect to the server for the Store Print Log to Network feature.	• Make sure your server address is correct. • Make sure your server is connected to the network. • Make sure the machine is connected to the network.
Wrong Date&Time, contact your administrator.	The Brother machine does not obtain the time from the SNTP time server or you have not configured the Date&Time for the machine.	• Make sure the settings to access the SNTP time server are configured correctly in Web Based Management. • Confirm the **Date&Time** settings of your machine are correct in Web Based Management.

MFC-L3710CW/MFC-L3735CDN/MFC-L3745CDW/MFC-L3750CDW/MFC-L3770CDW

Error Messages	Cause	Action
The maximum number of devices are already connected using Wi-Fi Direct.	The maximum number of mobile devices are already connected to the Wi-Fi Direct network when the Brother machine is the Group Owner (G/O).	After the current connection between your Brother machine and another mobile device has shut down, try to configure the Wi-Fi Direct settings again. You can confirm the connection status by printing the Network Configuration Report.
Authentication Error, contact your administrator.	Your authentication setting for the Store Print Log to Network feature is not correct.	• Make sure the **Username** and **Password** in **Authentication Setting** are correct. If the username is part of a domain, enter the username in one of the following styles: user@domain or domain\user. • Make sure the time of the log file server matches the time from the SNTP server, or the **Date&Time** settings. • Make sure the SNTP time server settings are configured correctly so the time matches the time used for authentication by Kerberos or NTLMv2. If there is no SNTP server, make sure the **Date&Time** and **Time Zone** settings are set correctly using Web Based Management or the control panel so the machine matches the time being used by the server providing the authentication.
Connection Error	Other devices are trying to connect to the Wi-Fi Direct network at the same time.	• Make sure there are no other devices trying to connect to the Wi-Fi Direct network, and then try to configure the Wi-Fi Direct settings again.
Connection Failed	The Brother machine and your mobile device cannot communicate during the Wi-Fi Direct network configuration.	• Move the mobile device closer to your Brother machine. • Move your Brother machine and the mobile device to an obstruction-free area. • If you are using the PIN Method of WPS, make sure you have entered the correct PIN.
File Access Error, contact your administrator.	The Brother machine cannot access the destination folder for the Store Print Log to Network feature.	• Make sure the stored directory name is correct. • Make sure the stored directory is write-enabled. • Make sure the file is not locked.

Error Messages	Cause	Action
File Access Error, contact your administrator.	In Web Based Management, you have selected the **Cancel Print** option in the **Error Detection Setting** of **Store Print Log to Network**.	Wait for about 60 seconds until this message disappears from the LCD.
No Device	When configuring the Wi-Fi Direct network, the Brother machine cannot find your mobile device.	• Make sure your machine and mobile device are in the Wi-Fi Direct mode. • Move the mobile device closer to your Brother machine. • Move your Brother machine and the mobile device to an obstruction-free area. • If you are manually configuring the Wi-Fi Direct network, make sure you have entered the correct password. • If your mobile device has a configuration page for how to obtain an IP address, make sure the IP address of your mobile device has been configured via DHCP.
Server Timeout, contact your administrator.	The Brother machine cannot connect to the server for the Store Print Log to Network feature.	• Make sure your server address is correct. • Make sure your server is connected to the network. • Make sure the machine is connected to the network.
Wrong Date&Time, contact your administrator.	The Brother machine does not obtain the time from the SNTP time server or you have not configured the Date&Time for the machine.	• Make sure the settings to access the SNTP time server are configured correctly in Web Based Management. • Confirm the **Date&Time** settings of your machine are correct in Web Based Management.

Related Information

- Network Problems

Use the Network Connection Repair Tool (Windows)

Use the Network Connection Repair Tool to fix the Brother machine's network settings. It will assign the correct IP address and Subnet Mask.

- Windows 7/Windows 8/Windows 10
  You must log on with Administrator rights.
- Make sure the Brother machine is turned on and is connected to the same network as your computer.

1. Do one of the following:

Option	Description
Windows 7	Click **(Start)** > **All Programs** > **Brother** > **Brother Utilities**. Click the drop-down list and select your model name (if not already selected). Click **Tools** in the left navigation bar, and then click **Network Connection Repair Tool**.
Windows 8/ Windows 10	Launch (**Brother Utilities**), and then click the drop-down list and select your model name (if not already selected). Click **Tools** in the left navigation bar, and then click **Network Connection Repair Tool**.

If the **User Account Control** screen appears, click **Yes**.

2. Follow the on-screen instructions.
3. Check the diagnosis by printing the Network Configuration Report or the Printer Settings page.

The Network Connection Repair Tool will start automatically if you select the **Enable Connection Repair Tool** option in the Status Monitor. Right-click the Status Monitor screen, and then click **Other Settings** > **Enable Connection Repair Tool**. This is not recommended when your network administrator has set the IP address to Static, since it will automatically change the IP address.

If the correct IP address and the Subnet Mask are still not assigned even after using the Network Connection Repair Tool, ask your network administrator for this information.

Related Information

- Network Problems

Related Topics:

- Print the Network Configuration Report
- My Brother Machine Cannot Print, Scan, or PC-FAX Receive over the Network
- I Want to Check that My Network Devices are Working Correctly

Where Can I Find My Brother Machine's Network Settings?

- Print the Network Configuration Report
- Change Machine Settings from Your Computer

I Cannot Complete the Wireless Network Setup Configuration

Related Models: DCP-L3510CDW/DCP-L3551CDW/MFC-L3710CW/MFC-L3745CDW/MFC-L3750CDW/MFC-L3770CDW

Turn your wireless router off and back on. Then try to configure the wireless settings again. If you are unable to resolve the problem, follow the instructions below:

Investigate the problem using the WLAN Report.

Cause	Action	Interface
Your security settings (SSID/Network Key) are not correct.	• Confirm the security settings using **Wireless Setup Helper**. For more information and to download the utility, go to your model's **Downloads** page on the Brother Solutions Center at support.brother.com. • Select and confirm that you are using the correct security settings. - See the instructions supplied with your wireless LAN access point/router for information on how to find the security settings. - The manufacturer's name or model number of the wireless LAN access point/router may be used as the default security settings. - Consult with the access point/router manufacturer, your Internet provider, or network administrator.	Wireless
Your Brother machine's MAC address is not allowed.	Confirm that the Brother machine's MAC Address is allowed in the filter. You can find the MAC Address on your Brother machine's control panel.	Wireless
Your wireless LAN access point/router is in stealth mode (not broadcasting the SSID).	• Enter the correct SSID name or Network Key manually. • Check the SSID name or the Network Key in the instructions supplied with your wireless LAN access point/router and reconfigure the wireless network setup.	Wireless
Your security settings (SSID/password) are not correct.	• Confirm the SSID and password. - When you are configuring the network manually, the SSID and password are displayed on your Brother machine. If your mobile device supports the manual configuration, the SSID and password will be displayed on your mobile device's screen.	Wi-Fi Direct
You are using Android™ 4.0.	If your mobile device disconnects (approximately six minutes after using Wi-Fi Direct), try the one-push configuration using WPS (recommended) and set the Brother machine as a G/O.	Wi-Fi Direct
Your Brother machine is placed too far from your mobile device.	Move your Brother machine within about 3.3 feet (1 metre) of the mobile device when you configure the Wi-Fi Direct network settings.	Wi-Fi Direct
There are some obstructions (walls or furniture, for example) between your machine and the mobile device.	Move your Brother machine to an obstruction-free area.	Wi-Fi Direct
There is a wireless computer, Bluetooth®-supported device, microwave oven, or digital cordless phone near the	Move other devices away from the Brother machine or the mobile device.	Wi-Fi Direct

Cause	Action	Interface
Brother machine or the mobile device.		
If you have checked and tried all of the above, but still cannot complete the Wi-Fi Direct configuration, do the following:	• Turn your Brother machine off and back on. Then try to configure the Wi-Fi Direct settings again. • If you are using your Brother machine as a client, confirm how many devices are allowed in the current Wi-Fi Direct network, and then check how many devices are connected.	Wi-Fi Direct

For Windows

If your wireless connection has been interrupted, and you have checked and tried all of the above, we recommend using the Network Connection Repair Tool.

Related Information

- Network Problems

Related Topics:

- Configure Your Machine for a Wireless Network When the SSID Is Not Broadcast
- Use Wi-Fi Direct®

My Brother Machine Cannot Print, Scan, or PC-FAX Receive over the Network

Cause	Action	Interface
Your security software blocks your machine's access to the network. (The Network scanning feature does not work.)	• Windows Configure the third-party Security/Firewall Software to allow Network scanning. To add port 54925 for Network scanning, type the information below: - In **Name**: Type any description, for example Brother NetScan. - In **Port number**: Type 54925. - In **Protocol**: UDP is selected. See the instruction manual that came with your third-party Security/Firewall Software or contact the software manufacturer. • Mac (Brother iPrint&Scan) In the **Finder** menu bar, click **Go** > **Applications**, and then double-click the Brother iPrint&Scan icon. The Brother iPrint&Scan window appears. Click the **Select your Machine** button, and then follow the on-screen instructions to reselect your network machine. (TWAIN driver) In the **Finder** menu bar, click **Go** > **Applications** > **Brother** > **TWAIN Driver Utility**, and then double-click the Device Selector icon. The Device Selector window appears. Reselect your network machine, make sure **Status** is **idle**, and then click **OK**.	Wired/Wireless
Your security software blocks your machine's access to the network. (The network PC-Fax Receive feature does not work.) (Windows)	Set the third-party Security/Firewall Software to allow PC-FAX Rx. To add port 54926 for Network PC-FAX Rx, type the information below: • In **Name**: Type any description, for example Brother PC-FAX Rx. • In **Port number**: Type 54926. • In **Protocol**: UDP is selected. See the instruction manual that came with your third-party Security/Firewall Software or contact the software manufacturer.	Wired/Wireless
Your security software blocks your machine's access to the network.	Some security software might block access without showing a security alert dialog box even after successful installation. To allow access, see the instructions for your security software or ask the software manufacturer.	Wired/Wireless
Your Brother machine was not assigned an available IP address.	• Confirm the IP address and the Subnet Mask. Verify that both the IP addresses and Subnet Masks of your computer and the Brother machine are correct and located on the same network. For more information about how to verify the IP address and the Subnet Mask, ask your network administrator. • Windows Confirm the IP address and the Subnet Mask using the Network Connection Repair Tool.	Wired/Wireless

Cause	Action	Interface
The failed print job is still in your computer's print queue.	• If the failed print job is still in your computer's print queue, delete it. • Otherwise, double-click the printer icon in the following folder and cancel all documents: - Windows 7 Click **(Start)** > **Devices and Printers**. - Windows 8 Move your mouse to the lower right corner of your desktop. When the menu bar appears, click **Settings** > **Control Panel**. In the **Hardware and Sound** group, click **View devices and printers**. - Windows 10 and Windows Server 2016 Click > **Windows System** > **Control Panel**. In the **Hardware and Sound** group, click **View devices and printers**. - Windows Server 2008 Click **Start** > **Control Panel** > **Printers**. - Windows Server 2012 Move your mouse to the lower right corner of your desktop. When the menu bar appears, click **Settings** > **Control Panel**. In the **Hardware** group, click **View devices and printers** > **Printers**. - Windows Server 2012 R2 Click **Control Panel** on the **Start** screen. In the **Hardware** group, click **View devices and printers**. - Mac Click **System Preferences** > **Printers & Scanners**.	Wired/Wireless
Your Brother machine is not connected to the wireless network.	Print the WLAN Report to check the error code on the printed report.	Wireless

If you have checked and tried all of the above, but your Brother machine still cannot print and scan, uninstall the Brother software and drivers and reinstall them.

Related Information

- Network Problems

Related Topics:

- Print the WLAN Report
- Wireless LAN Report Error Codes
- Use the Network Connection Repair Tool (Windows)
- I Want to Check that My Network Devices are Working Correctly

I Want to Check that My Network Devices are Working Correctly

Check	Action	Interface
Check that your Brother machine, access point/ router, or network hub is turned on.	**Check the following:** • The power cord is connected correctly and the Brother machine is turned on. • The access point/router or hub is turned on and its link button is blinking. • All protective packaging has been removed from the machine. • The toner cartridge and drum unit are installed correctly. • The machine's cover is fully closed. • Paper is inserted correctly in the paper tray. • (For wired networks) A network cable is securely connected to the Brother machine and to the router or hub.	Wired/Wireless
Check the **Link Status** in the Network Configuration Report or the Printer Settings page.	Print the Network Configuration Report and check that **Ethernet Link Status** or **Wireless Link Status** is **Link OK**.	Wired/Wireless
Check that you can "ping" the Brother machine from your computer.	Ping the Brother machine from your computer using the IP address or the node name in the Windows command prompt or Mac Terminal application: ping `<ipaddress>` or `<nodename>`. • Successful: Your Brother machine is working correctly and connected to the same network as your computer. • Unsuccessful: Your Brother machine is not connected to the same network as your computer. (Windows) Ask the network administrator and use the Network Connection Repair Tool to fix the IP address and the subnet mask. (Mac) Confirm that the IP address and the Subnet Mask are set correctly.	Wired/Wireless
Check that your Brother machine is connected to the wireless network.	Print the WLAN Report to check the error code on the printed report.	Wireless

If you have checked and tried all of the above but you are still having problems, see the instructions supplied with your wireless LAN access point/router to find the SSID and the Network Key information and set them correctly.

Related Information

- Network Problems

Related Topics:

- Print the Network Configuration Report
- Print the WLAN Report
- Wireless LAN Report Error Codes
- Use the Network Connection Repair Tool (Windows)
- My Brother Machine Cannot Print, Scan, or PC-FAX Receive over the Network

Google Cloud Print Problems

Difficulty	Suggestions
My Brother machine is not displayed in the printer list.	Make sure your machine is turned on.
	Confirm that Google Cloud Print™ is enabled.
	Confirm that your machine is registered with Google Cloud Print™. If it is not registered, try to register again.
I cannot print.	Make sure your machine is turned on.
	Confirm your network settings. See *Related Information*.
	Certain files may not be printable, or may not appear exactly as they are displayed.
I cannot register my Brother machine with Google Cloud Print™.	Make sure your machine is connected to a network with Internet access.
	Verify that the date and time are set correctly on your machine.
I do not see a confirmation message on my Brother machine when I try to register with Google Cloud Print™, even after repeating the registration steps.	Make sure your Brother machine is idle while you are registering with Google Cloud Print™.

Related Information

- Troubleshooting

Related Topics:

- Network Settings for Using Google Cloud Print

AirPrint Problems

Difficulty	Suggestions
My Brother machine is not displayed in the printer list.	Make sure your Brother machine is turned on.
	Confirm the network settings.
	Move the mobile device closer to the wireless access point/router, or to your Brother machine.
I cannot print.	Make sure your Brother machine is turned on.
	Confirm the network settings.
I am trying to print a multiple-page document from an iOS device, but ONLY the first page is printing.	Make sure you are running the latest OS version. Refer to the following Apple support article for more information about AirPrint: support.apple.com/kb/HT4356.

Related Information

- Troubleshooting

Related Topics:

- AirPrint Overview

Other Problems

Difficulties	Suggestions
The machine will not turn on.	Adverse conditions on the power connection (such as lightning or a power surge) may have triggered the machine's internal safety mechanisms. Unplug the power cord. Wait for ten minutes, then plug in the power cord and press to turn on the machine. If the problem is not solved, press and hold to turn off the machine. If you are using a backup battery or surge suppressor device, disconnect it to make sure it is not the problem. Plug the machine's power cord directly into a different known working wall outlet and press to turn on the machine.
The machine cannot print EPS data that includes binary with the BR-Script3 printer driver.	**(Windows)** To print EPS data, do the following: 1. For Windows 7 and Windows Server 2008 R2: Click the **Start** button > **Devices and Printers**. For Windows Server 2008: Click the **(Start)** button > **Control Panel** > **Hardware and Sound** > **Printers**. For Windows 8 and Windows Server 2012: Move your mouse to the lower right corner of your desktop. When the menu bar appears, click **Settings** > **Control Panel**. In the **Hardware and Sound** [1] group, click **View devices and printers**. For Windows 10 and Windows Server 2016: Click > **Windows System** > **Control Panel**. In the **Hardware and Sound** group, click **View devices and printers**. For Windows Server 2012 R2: Click **Control Panel** on the **Start** screen. In the **Hardware** group, click **View devices and printers**. 2. Right-click the **Brother XXX-XXXX BR-Script3** icon, select **Printer properties**. 3. From the **Device Settings** tab, choose TBCP (Tagged binary communication protocol) in **Output Protocol**.
The Brother software cannot be installed.	**(Windows)** If the Security Software warning appears on the computer screen during the installation, change the Security Software settings to permit the Brother product setup program or other program to run. **(Mac)** If you are using a firewall function of anti-spyware or antivirus security software, temporarily disable it and then install the Brother software.

[1] For Windows Server 2012: **Hardware and Sound**

Copying difficulties

Difficulties	Suggestions
Cannot make a copy.	Make sure you pressed Copy and the machine is in Copy mode.
	Contact your administrator to check your Secure Function Lock Settings.
Vertical black line appears in copies.	Black vertical lines on copies are typically caused by dirt or correction fluid on the glass strip, or the corona wires are dirty. Clean the glass strip and scanner glass and the white bar and white plastic above them.
Copies are blank.	Make sure you are loading the document correctly.

Scanning difficulties

Difficulties	Suggestions
TWAIN or WIA errors appear when starting to scan. (Windows)	Make sure the Brother TWAIN or WIA driver is selected as the primary source in your scanning application. For example, in Nuance™ PaperPort™ 14SE, click **Desktop** > **Scan Settings** > **Select** to select the Brother TWAIN/WIA driver.
TWAIN errors appear when starting to scan. (Mac)	Make sure the Brother TWAIN driver is selected as the primary source.
OCR does not work.	Try increasing the scanning resolution.
Cannot scan.	Contact your administrator to check your Secure Function Lock Settings.

Software difficulties

Difficulties	Suggestions
Cannot install software or print.	(Windows) Run the install program again. This program will repair and reinstall the software.

Related Information

- Troubleshooting

Check the Machine Information

Follow these instructions to check your Brother machine's serial number and firmware version.

>> DCP-L3510CDW/DCP-L3551CDW
>> MFC-L3710CW/MFC-L3735CDN/MFC-L3745CDW/MFC-L3750CDW/MFC-L3770CDW

DCP-L3510CDW/DCP-L3551CDW

1. Press **Menu**.
2. Press ▲ or ▼ to display the [Machine Info.] option, and then press **OK**.
3. Press ▲ or ▼ to select one of the following options:

Option	Description
Serial No.	Check your machine's serial number.
Version	Check your machine's firmware version.
Page Counter	Check the total number of pages the machine has printed.
Parts Life	Check the supplies' life that remains available.

4. Press **OK**.
5. Press **Stop/Exit**.

MFC-L3710CW/MFC-L3735CDN/MFC-L3745CDW/MFC-L3750CDW/MFC-L3770CDW

1. Press [Settings] > [All Settings] > [Machine Info.].
2. Press one of the following options:

Option	Description
Serial No.	Check your machine's serial number.
Firmware Version	Check your machine's firmware version.
Firmware Update	Update your machine to the latest firmware.
Firmware Auto Check	View firmware information on the Main Home screen.
Page Counter	Check the total number of pages the machine has printed.
Parts Life	Check the percentage of the supplies' life that remains available.

3. Press .

Related Information

- Troubleshooting

Reset Your Brother Machine

>> DCP-L3510CDW/DCP-L3551CDW
>> MFC-L3710CW/MFC-L3735CDN/MFC-L3745CDW/MFC-L3750CDW/MFC-L3770CDW

DCP-L3510CDW/DCP-L3551CDW

1. Press **Menu**.
2. Press ▲ or ▼ to display the `[Initial Setup]` option, and then press **OK**.
3. Press ▲ or ▼ to display the `[Reset]` option, and then press **OK**.
4. Press ▲ or ▼ to choose the type of reset you want to perform, and then press **OK**.

Subdivided reset functions are not available for some models.

5. Press the option in the table to reset the machine or to exit the process.

Option	Description
▲	Reset the machine.
▼	The machine will exit and cancel the reset menu.

The LCD displays `[Reboot OK?]`.

6. Press the option in the table to reboot the machine or to exit the process.

Option	Description
▲	Reboot the machine. The machine will begin the reset.
▼	The machine will exit without rebooting.

If you do not reboot your machine, the reset process will not finish and your settings will remain unchanged.

MFC-L3710CW/MFC-L3735CDN/MFC-L3745CDW/MFC-L3750CDW/MFC-L3770CDW

1. Press `[Settings]` > `[All Settings]` > `[Initial Setup]` > `[Reset]`.
2. Swipe up or down or press ▲ or ▼ to display the type of reset functions, and then press the reset function you want to use.

- The network settings, the security settings and address book data will not be reset by the `[Machine Reset]`.
- If you discard or transfer the machine, we recommend accomplishment of the `[Factory Reset]` to erase the personal data in the machine.

3. `[Machine will reboot after resetting. Press [OK] for 2 seconds to confirm.]` appears. Press `[OK]` for two seconds to confirm.

You can also reset the Network settings by pressing `[Settings]` > `[All Settings]` > `[Network]` > `[Network Reset]`.

The machine will restart.

Related Information

- Troubleshooting
  - Reset Functions Overview

Reset Functions Overview

The following reset functions are available:

Unplug the interface cable before you choose Network Settings Reset function, All Settings Reset function or Factory Reset function.

>> DCP-L3510CDW/DCP-L3551CDW
>> MFC-L3710CW/MFC-L3735CDN/MFC-L3745CDW/MFC-L3750CDW/MFC-L3770CDW

DCP-L3510CDW/DCP-L3551CDW

Subdivided reset functions are not available for some models.

1. Machine Reset

   This function resets the following settings:

   - Programmed fax jobs in the memory (For MFC Models)

     (Delayed Fax, Batch TX)
   - Coverpage Message (For MFC Models)
   - Remote Fax Options (For MFC Models)

     (Remote Access Code, Fax Storage, Fax Forwarding, PC-Fax Send, and PC-Fax Receive (Windows only))
   - Setting Lock (For MFC Models)
   - Language Setting
2. Network Settings Reset (For Network Models)

   Reset the print server back to its default factory settings (includes Password and IP Address information).
3. Address Book and Fax Settings Reset (For MFC Models)

   This function resets the following settings:

   - Address Book

     (One Touch Dial / Speed Dial / Setup Groups)
   - Programmed fax jobs in the memory
   - Station ID

     (name and number)
   - Coverpage Message
   - Remote Fax Options

     (Remote Access Code, Fax Storage, Fax Forwarding, and PC-Fax Receive (Windows only))
   - Report

     (Transmission Verification Report/ Tel Index List/Fax Journal)
   - Setting Lock password
4. All Settings Reset

   You can reset all the machine's settings back to the settings that were set at the factory.

   All Settings Reset takes less time than Factory Reset.
5. Factory Reset

   Use the Settings Reset function to reset all machine's settings to the settings originally set at the factory.

   Factory Reset takes more time than All Settings Reset.

   Brother strongly recommends you perform this operation when you dispose of the machine.

Unplug the interface cable before you choose Network Settings Reset function, All Settings Reset function or Factory Reset function.

MFC-L3710CW/MFC-L3735CDN/MFC-L3745CDW/MFC-L3750CDW/MFC-L3770CDW

1. Machine Reset

   Reset all the machine’s settings that you have changed, such as Date and Time and Ring Delay.

   The Address Book, fax reports, and Call history will remain. (For MFC Models)
2. Network Settings Reset (For Network Models)

   Reset the print server back to its default factory settings (includes Password and IP Address information).
3. Address Book and Fax Settings Reset (For MFC Models)

   This function resets the following settings:
   - Address Book

     (Addresses and Groups)
   - Programmed fax jobs in the memory

     (Delayed Fax)
   - Station ID

     (name and number)
   - Coverpage Message
   - Fax receive settings

     (Remote Access Code, Fax Storage, Fax Forwarding, and PC-Fax Receive (Windows only))
   - Report

     (Transmission Verification Report / Tel Index List / Fax Journal)
   - Setting Lock password
4. All Settings Reset

   Reset all the machine's settings back to the settings that were set at the factory.

   All Settings Reset takes less time than Factory Reset.
5. Factory Reset

   Use the Settings Reset function to reset all machine's settings to the settings originally set at the factory.

   Factory Reset takes more time than All Settings Reset.

   Brother strongly recommends you perform this operation when you dispose of the machine.

Unplug the interface cable before you choose Network Settings Reset function, All Settings Reset function or Factory Reset function.

Related Information

- Reset Your Brother Machine

Routine Maintenance

- Replace Supplies
- Clean the Machine
- Calibrate Colour Output
- Correct Colour Print Alignment (Colour Registration)
- Check the Remaining Part Life
- Pack and Ship Your Brother Machine
- Replace Periodic Maintenance Parts

Replace Supplies

You must replace supplies when the machine indicates that the life of the supply is over.

Using non-Brother supplies may affect the print quality, hardware performance, and machine reliability. The toner cartridge and drum unit are two separate supplies. Make sure both are installed as an assembly. The model name of supplies may vary depending on the country.

NOTE

- Availability of toner cartridges differs from one country to another. Go to the Brother Solutions Center at support.brother.com or contact your local Brother office for further details.
- Be sure to seal up the used supplies tightly in a bag so that toner powder does not spill out of the cartridge.
- Discard used consumable items according to local regulations, keeping it separate from domestic waste. If you have questions, call your local waste disposal office. Be sure to reseal the consumable items tightly so that the material inside does not spill.
- We recommend placing used and new supplies on a piece of paper to prevent accidentally spilling or scattering the material inside.
- If you use paper that is not a direct equivalent for the recommended print media, the life of supplies and machine parts may be reduced.
- The projected life for each of the toner cartridges is based on ISO/IEC 19798. Frequency of replacement will vary depending on the print volume, percentage of coverage, types of media used, and powering on/off the machine.
- Frequency of replacing supplies except toner cartridges will vary depending on the print volume, types of media used, and powering on/off the machine.
- Handle the toner cartridge carefully. If toner scatters on your hands or clothes, immediately wipe or wash it off with cold water.
- To avoid print quality problems, DO NOT touch the shaded parts shown in the illustrations.

  Toner Cartridge

  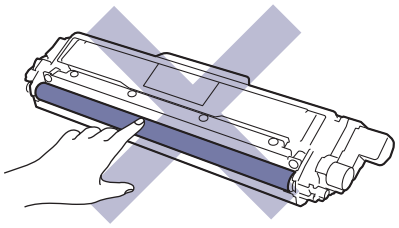

  Drum Unit

  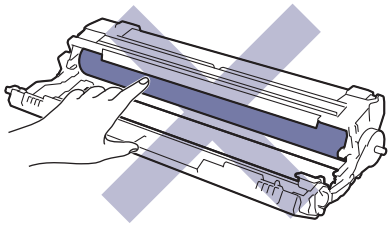

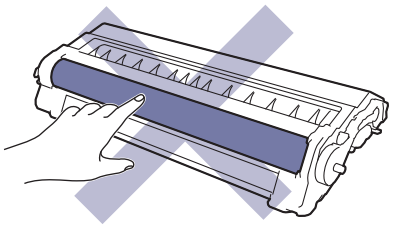

Belt Unit

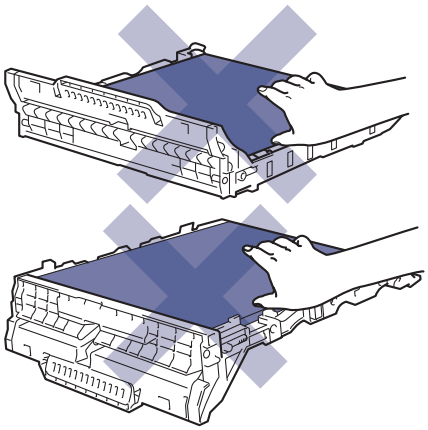

Waste Toner Box

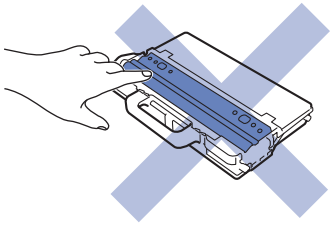

Related Information

- Routine Maintenance
  - Replace the Toner Cartridge
  - Replace the Drum Unit
  - Replace the Belt Unit
  - Replace the Waste Toner Box

Related Topics:

- Error and Maintenance Messages
- Supplies

Replace the Toner Cartridge

Before starting the replacement procedure, see *Related Information*: *Replace Supplies*.

1. Make sure the machine is turned on.
2. Open the top cover until it locks in the open position.

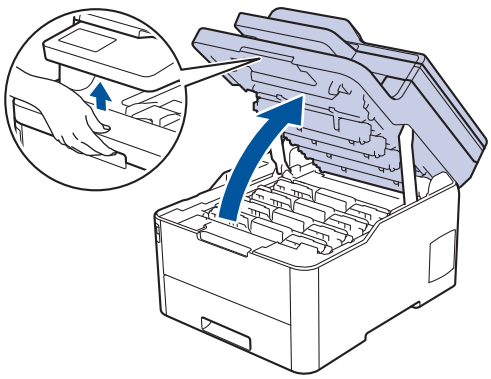

WARNING

HOT SURFACE

The machine's internal parts will be extremely hot. Wait for the machine to cool down before touching them.

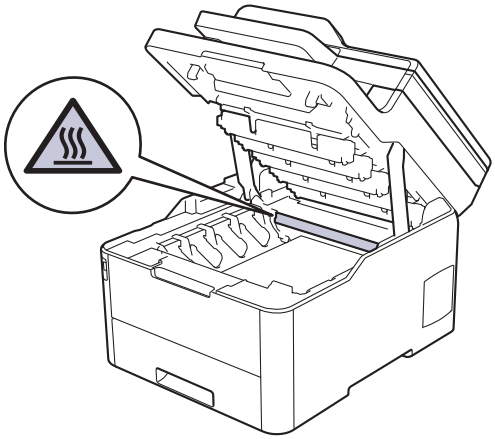

3. Remove the toner cartridge and drum unit assembly for the colour shown on the LCD.

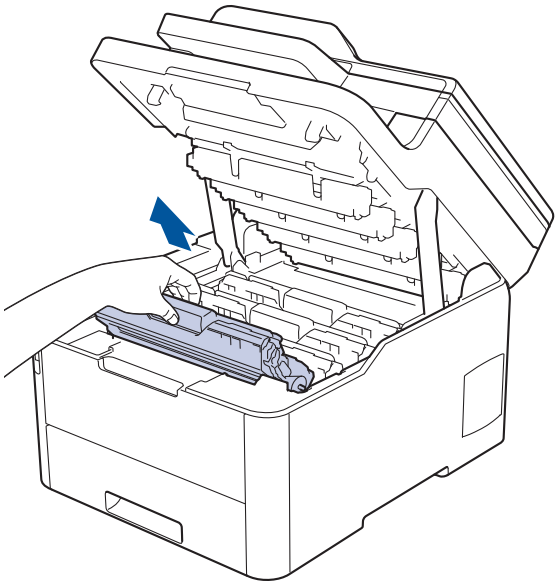

⚠ CAUTION

We recommend placing the toner cartridge and drum unit assemblies on a clean, flat surface with disposable paper underneath it in case you accidentally spill or scatter toner.

IMPORTANT

To prevent damage to the machine from static electricity, DO NOT touch the electrodes shown in the illustration.

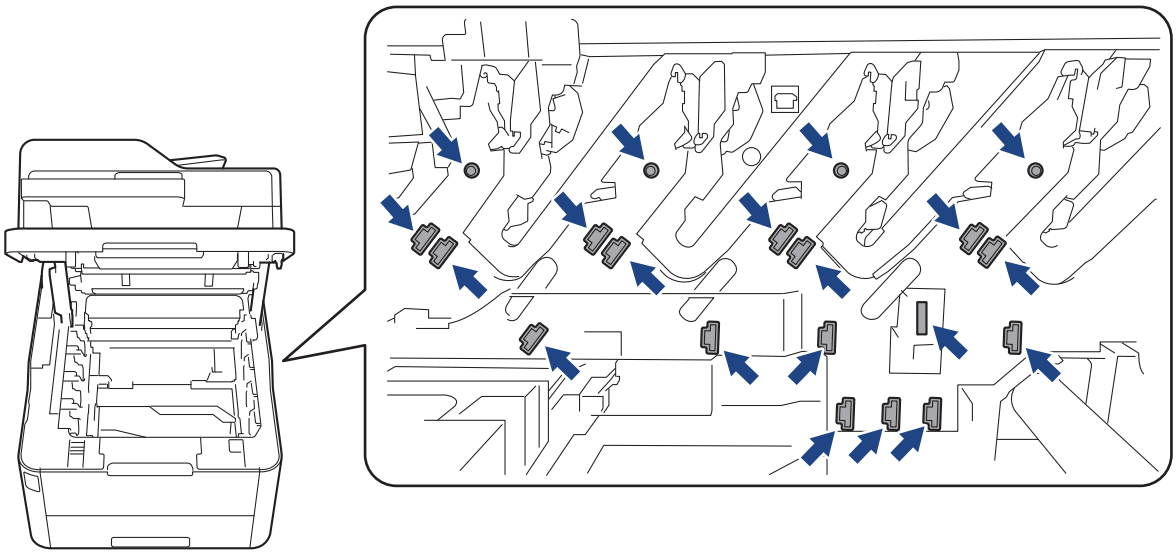

4. Push down the green lock lever and remove the toner cartridge from the drum unit.

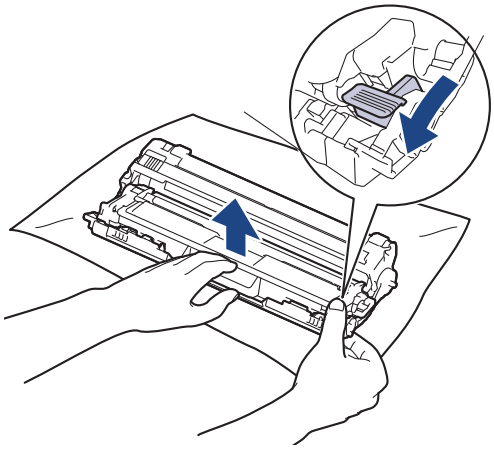

5. Unpack the new toner cartridge.
6. Remove the protective cover.

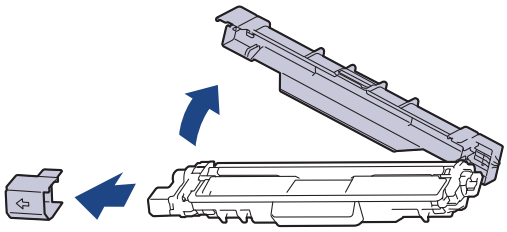

The shape of the toner cartridge will vary depending on your country and region.

7. Insert the new toner cartridge firmly into the drum unit until you hear it lock into place.

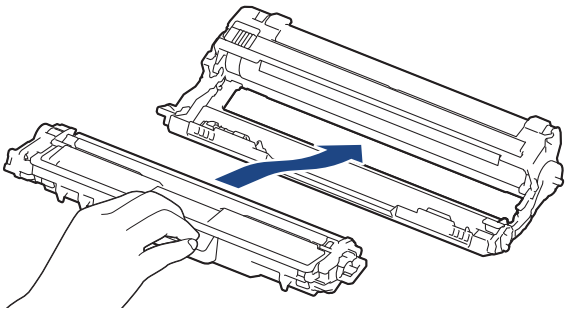

Make sure you put the toner cartridge in correctly or it may separate from the drum unit.

8. Clean the corona wire inside the drum unit by gently sliding the green tab from left to right and right to left several times. Repeat this for all the corona wires.

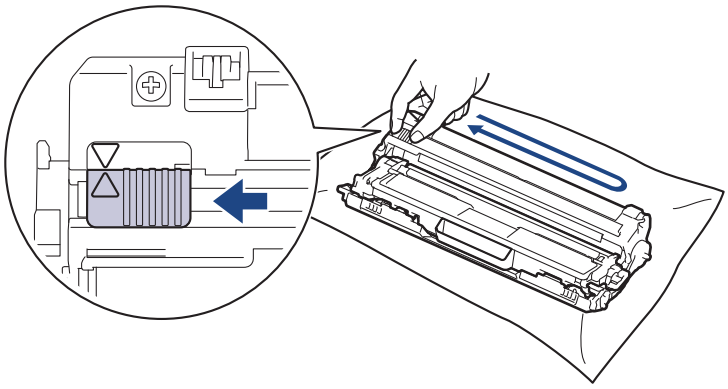

Be sure to return the green tab to the Home position (▲). The arrow on the tab must be aligned with the arrow on the drum unit. If it is not, printed pages may have a vertical stripe.

9. Slide the toner cartridge and drum unit assemblies into the machine. Make sure that you match the toner cartridge colour to the same colour label on the machine.

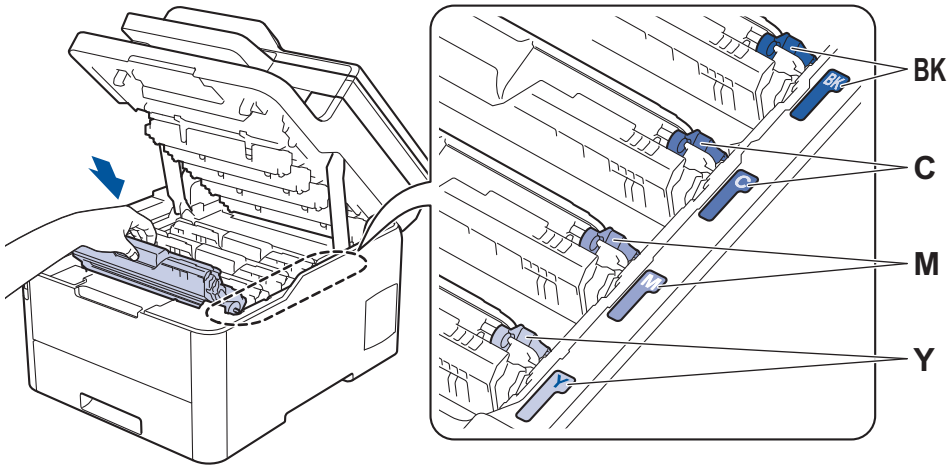

10. Close the machine's top cover.

- After replacing a toner cartridge, DO NOT turn the machine off or open the top cover until the machine's display returns to Ready Mode.
- The toner cartridge that comes with your Brother machine is an Inbox toner cartridge.
- We recommend keeping a new toner cartridge ready for use when you see the Toner Low warning.
- To ensure high quality printing, we recommend using only Brother Original toner cartridges. When you want to buy toner cartridges, contact Brother customer service or your local Brother dealer.
- DO NOT unpack the new toner cartridge until you are ready to install it.
- If a toner cartridge is left unpacked for a long time, the toner life will be shortened.
- Brother strongly recommends you DO NOT refill the toner cartridge provided with your machine. We also strongly recommend you continue to use only Brother Original replacement toner cartridges. Use or attempted use of third-party toner and/or cartridges in the Brother machine may cause damage to the machine and/or may result in unsatisfactory print quality. Our limited warranty coverage does not apply to any problem that is caused by the use of third party toner and/or cartridges. To protect your investment and obtain premium performance from the Brother machine, we strongly recommend the use of Brother Original Supplies.

Related Information

- Replace Supplies

Related Topics:

- Error and Maintenance Messages
- Improve the Print Quality

Replace the Drum Unit

Before starting the replacement procedure, see *Related Information*: *Replace Supplies*.

>> Replace the Drum Unit
>> Reset the Drum Counter (DCP-L3510CDW/DCP-L3551CDW)
>> Reset the Drum Counter (MFC-L3710CW/MFC-L3735CDN/MFC-L3745CDW/MFC-L3750CDW/MFC-L3770CDW)

Replace the Drum Unit

1. Make sure the machine is turned on.
2. Open the top cover until it locks in the open position.

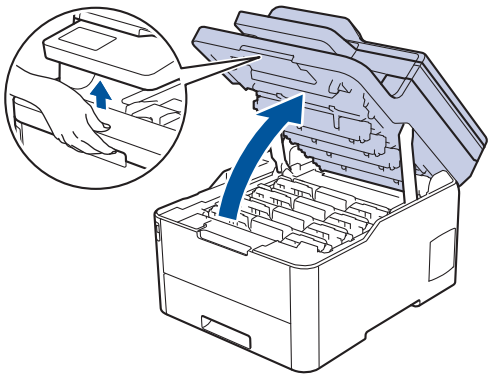

WARNING

HOT SURFACE

The machine's internal parts will be extremely hot. Wait for the machine to cool down before touching them.

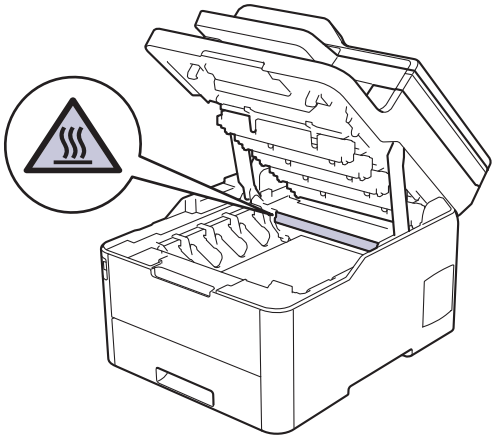

3. Remove the toner cartridge and drum unit assembly for the colour shown on the LCD.

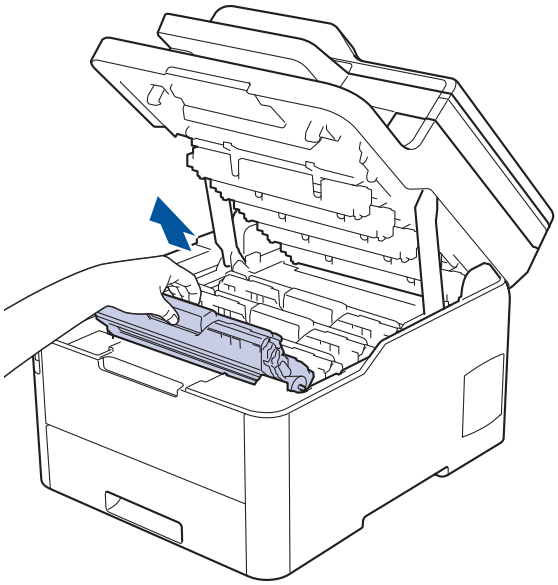

CAUTION

We recommend placing the toner cartridge and drum unit assemblies on a clean, flat surface with disposable paper underneath it in case you accidentally spill or scatter toner.

IMPORTANT

To prevent damage to the machine from static electricity, DO NOT touch the electrodes shown in the illustration.

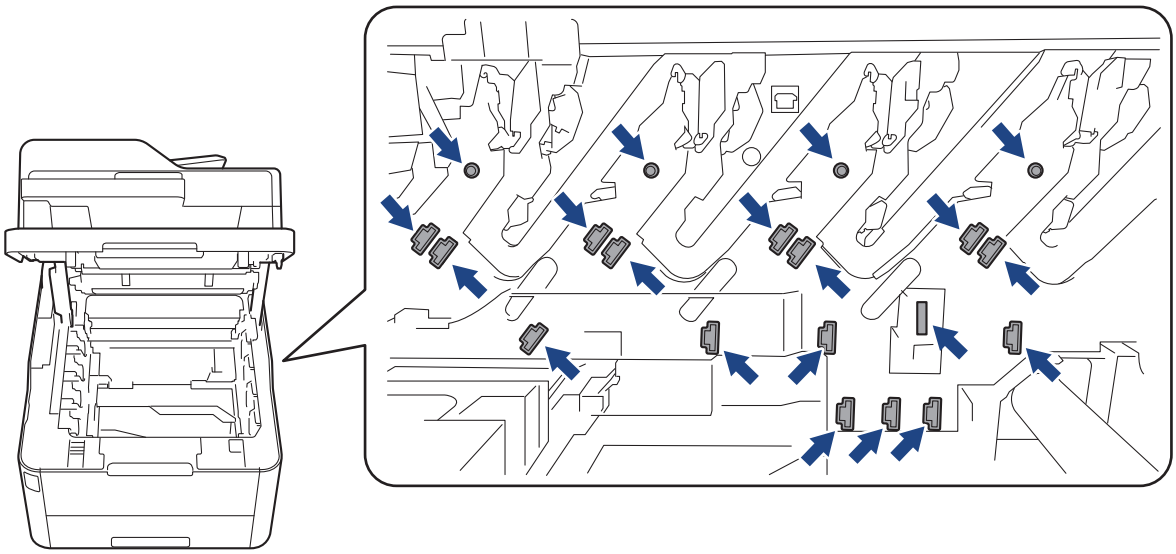

4. Push down the green lock lever and remove the toner cartridge from the drum unit.

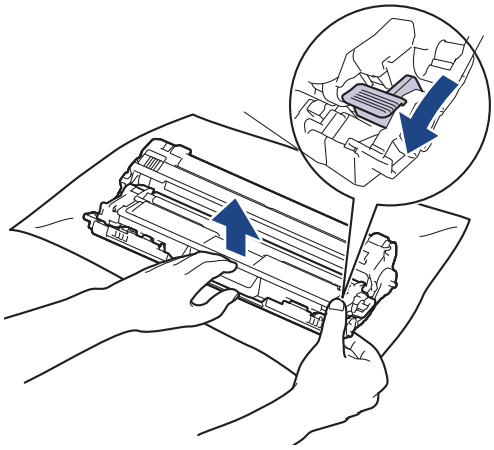

5. Unpack the new drum unit.
6. Remove the protective cover.

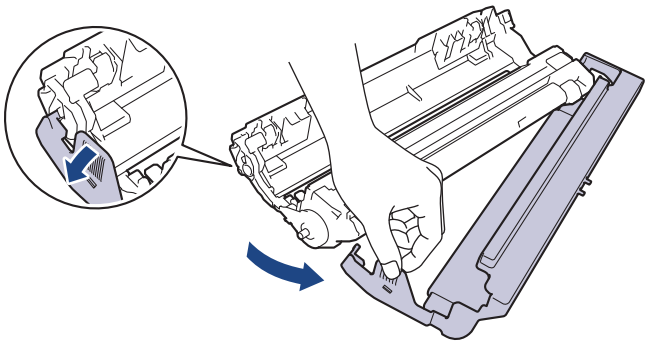

7. Reinsert the toner cartridge firmly into the new drum unit until you hear it lock into place.

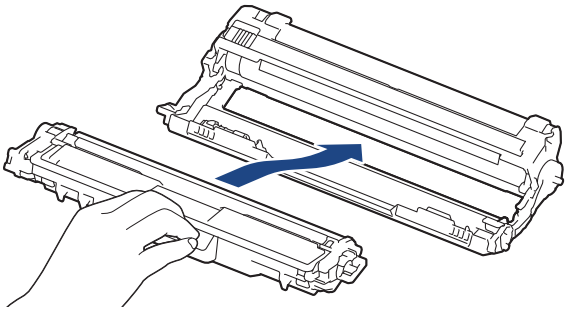

Make sure you put the toner cartridge in correctly or it may separate from the drum unit.

8. Clean the corona wire inside the drum unit by gently sliding the green tab from left to right and right to left several times. Repeat this for all the corona wires.

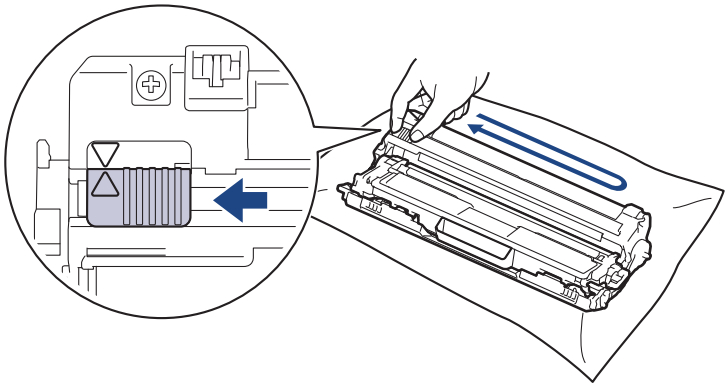

Be sure to return the green tab to the Home position (▲). The arrow on the tab must be aligned with the arrow on the drum unit. If it is not, printed pages may have a vertical stripe.

9. Slide the toner cartridge and drum unit assemblies into the machine. Make sure that you match the toner cartridge colour to the same colour label on the machine.

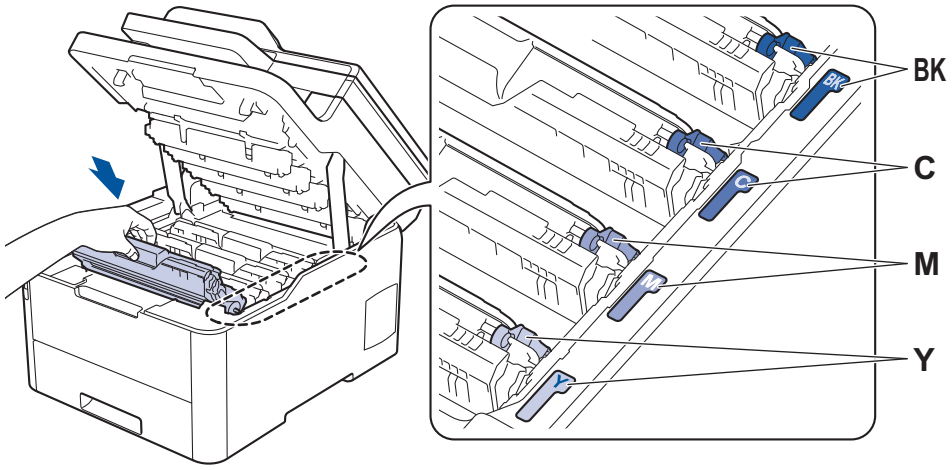

10. Close the machine's top cover.
11. Reset the drum counter by following the next section.

NOTE

- Drum wear and tear occurs due to use and rotation of the drum and interaction with paper, toner and other materials in the paper path. When a drum reaches the factory-established rotation limit corresponding to the rated page yield, the product's LCD will advise you to replace the drum. The product will continue to function; however, print quality may not be optimal.
- If an unpacked drum unit is placed in direct sunlight (or artificial light for long periods of time), the unit may be damaged.
- There are many factors that determine the actual drum life, such as the temperature, humidity, type of paper, type of toner used and so on. Under ideal conditions, the average drum life is estimated at approximately 18,000 pages based on one page per job [A4/letter simplex pages]. The number of pages may be affected due to a variety of factors including but not limited to media type and media size.

  Because we have no control over the many factors that determine the actual drum life, we cannot guarantee a minimum number of pages that will be printed by your drum.
- For best performance, use only Brother Original toner.
- The machine should be used only in a clean, dust-free environment with adequate ventilation.

  Printing with a non-Brother drum unit may reduce not only the print quality but also the quality and life of the machine itself. Warranty coverage does not apply to problems caused by the use of a non-Brother drum unit.

IMPORTANT

- To avoid print quality issues or damage to the machine, DO NOT reset the drum counter unless you are replacing the drum unit.
- If you reset the drum counter without replacing the drum unit, the machine will not be able to correctly calculate the remaining drum life.
- Using non-genuine Brother supplies may affect the print quality, hardware performance, and machine reliability.

Reset the Drum Counter (DCP-L3510CDW/DCP-L3551CDW)

1. Make sure the machine is turned on.
2. Make sure the machine's cover is closed.
3. Hold down **OK** as you press ▲.
4. Press **OK** to select `[Drum]`.

5. Press ▲ or ▼ to display the toner colour for the drum unit you just replaced, and then press **OK**.
6. Press ▲ to reset the drum counter.

Reset the Drum Counter (MFC-L3710CW/MFC-L3735CDN/MFC-L3745CDW/MFC-L3750CDW/MFC-L3770CDW)

1. Make sure the machine is turned on.
2. Press and hold for about five seconds.
3. Press [Drum].
4. Select the toner colour for the drum unit you just replaced.
5. Press [Yes].

Related Information

- Replace Supplies

Related Topics:

- Error and Maintenance Messages
- Improve the Print Quality

Replace the Belt Unit

Before starting the replacement procedure, see *Related Information*: *Replace Supplies*.

>> Replace the Belt Unit
>> Reset the Belt Unit Counter (DCP-L3510CDW/DCP-L3551CDW)
>> Reset the Belt Unit Counter (MFC-L3710CW/MFC-L3735CDN/MFC-L3745CDW/MFC-L3750CDW/MFC-L3770CDW)

Replace the Belt Unit

1. Make sure the machine is turned on.
2. Open the top cover until it locks in the open position.

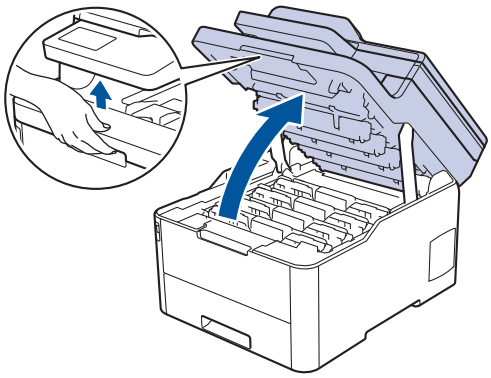

WARNING

HOT SURFACE

The machine's internal parts will be extremely hot. Wait for the machine to cool down before touching them.

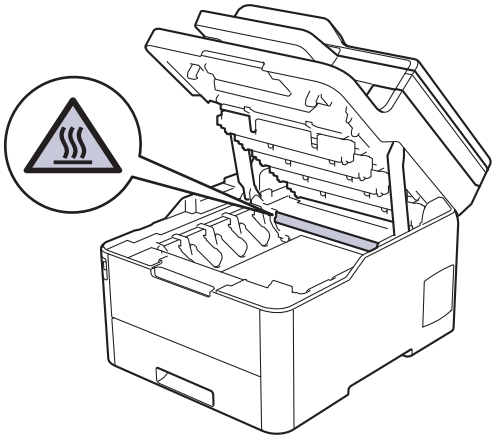

3. Remove all of the toner cartridge and drum unit assemblies.

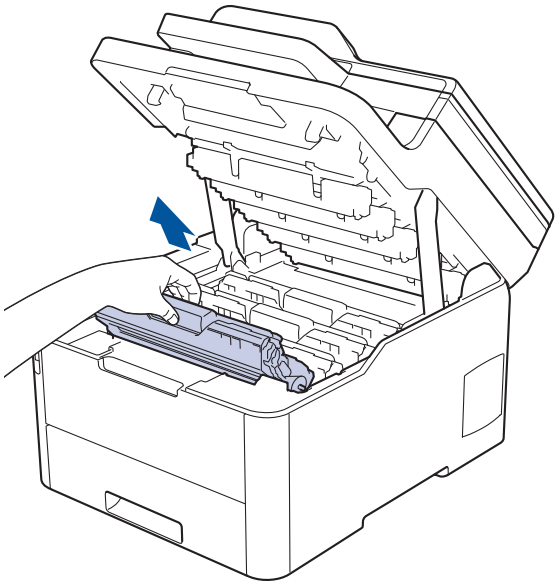

CAUTION

We recommend placing the toner cartridge and drum unit assemblies on a clean, flat surface with disposable paper underneath it in case you accidentally spill or scatter toner.

IMPORTANT

To prevent damage to the machine from static electricity, DO NOT touch the electrodes shown in the illustration.

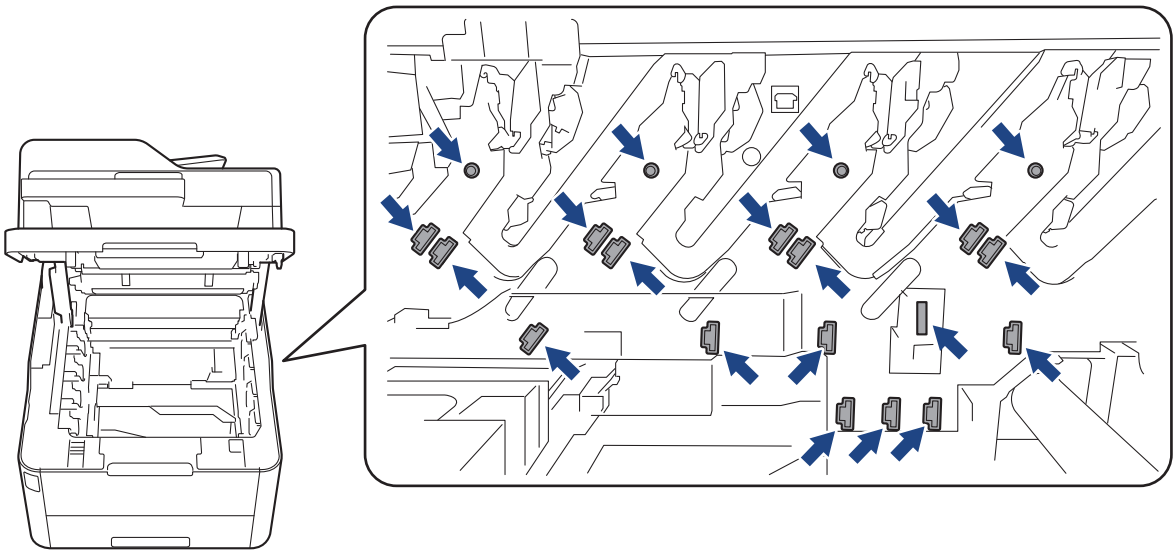

4. Hold the green handle of the belt unit and lift the belt unit up, and then pull it out without letting it touch the machine.

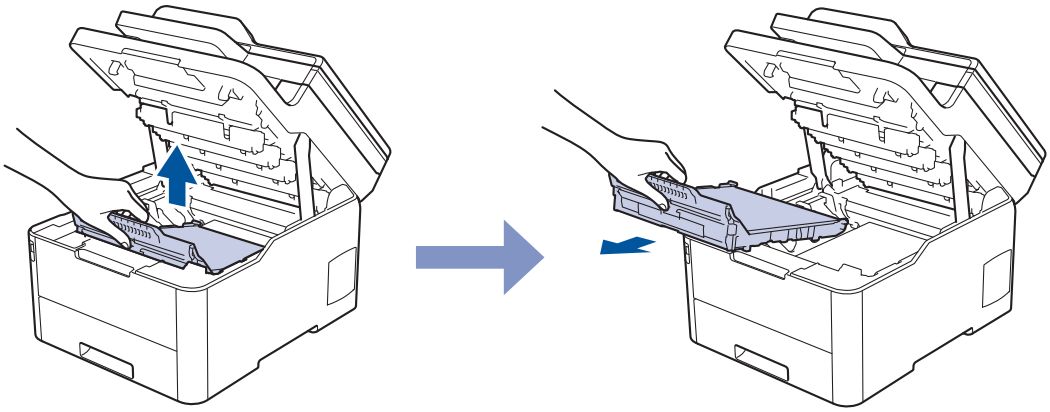

5. Unpack the new belt unit and insert it into the machine.

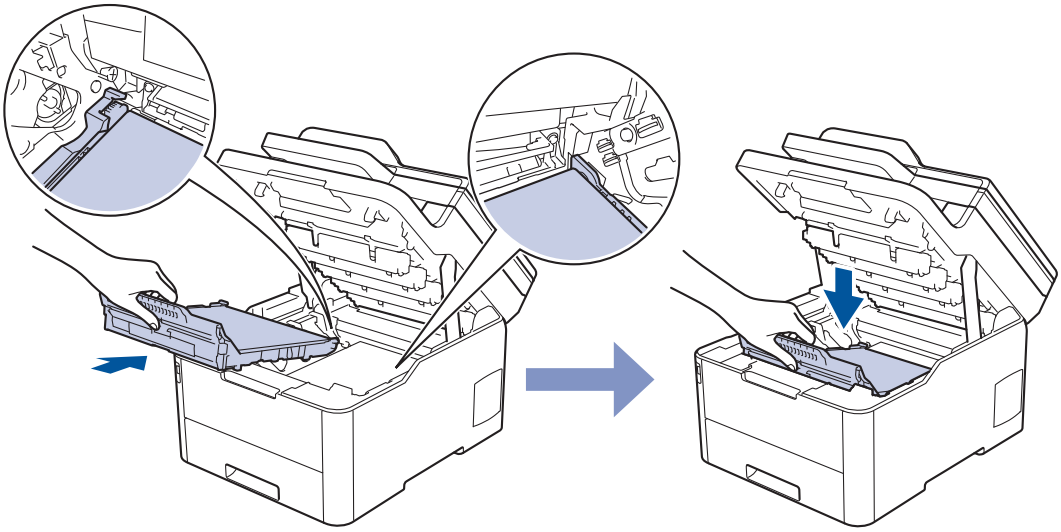

NOTE

To avoid print quality problems, DO NOT touch the shaded parts shown in the illustrations.

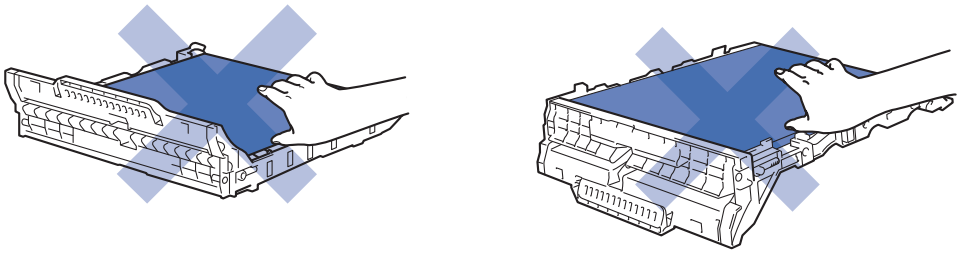

6. Reinsert each toner cartridge and drum unit assembly into the machine. Make sure that you match the toner cartridge colour to the same colour label on the machine for all four toner cartridge and drum unit assemblies.

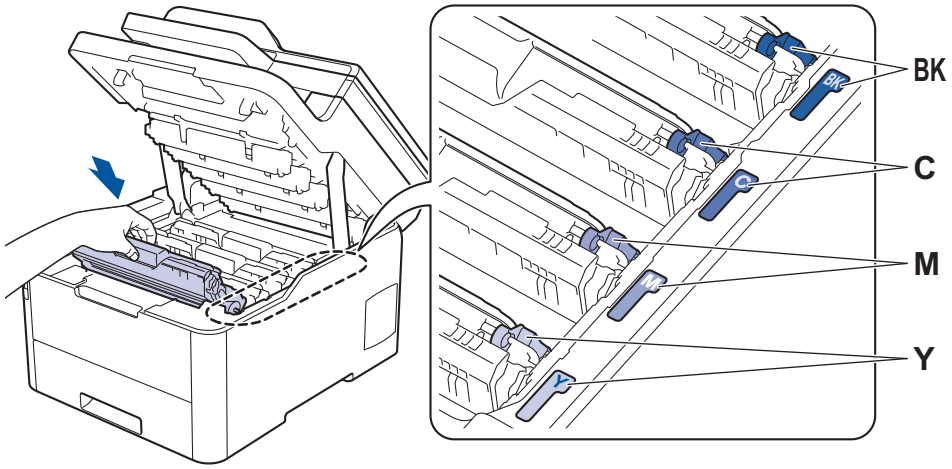

7. Close the machine's top cover.
8. Reset the belt unit counter by following the next section.

IMPORTANT

- To avoid print quality issues or damage to the machine, DO NOT reset the belt unit counter unless you are replacing the belt unit.
- Using non-genuine Brother supplies may affect the print quality, hardware performance, and machine reliability.

Reset the Belt Unit Counter (DCP-L3510CDW/DCP-L3551CDW)

1. Make sure the machine is turned on.
2. Make sure the machine's cover is closed.
3. Hold down **OK** as you press ▲.
4. Press ▲ or ▼ to display the `[Belt]` option, and then press **OK**.
5. Press ▲ to reset the belt counter.

Reset the Belt Unit Counter (MFC-L3710CW/MFC-L3735CDN/MFC-L3745CDW/MFC-L3750CDW/MFC-L3770CDW)

1. Make sure the machine is turned on.
2. Press and hold for about five seconds.
3. Press `[Belt]`.
4. Press `[Yes]`.

Related Information

- Replace Supplies

Related Topics:

- Error and Maintenance Messages
- Improve the Print Quality

Replace the Waste Toner Box

Before starting the replacement procedure, see *Related Information*: *Replace Supplies*.

1. Make sure the machine is turned on.
2. Open the top cover until it locks in the open position.

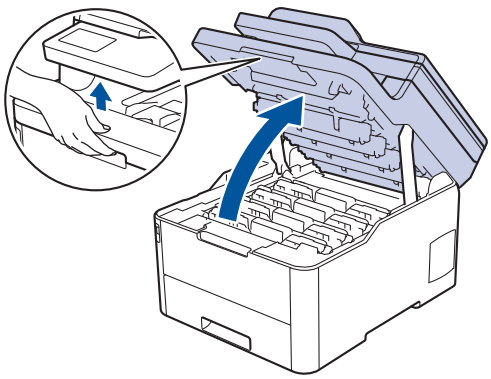

WARNING

HOT SURFACE

The machine's internal parts will be extremely hot. Wait for the machine to cool down before touching them.

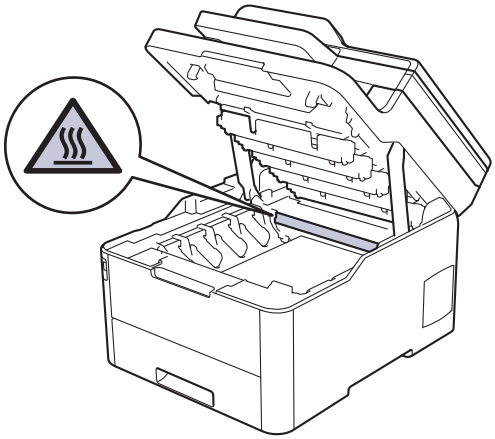

3. Remove all of the toner cartridge and drum unit assemblies.

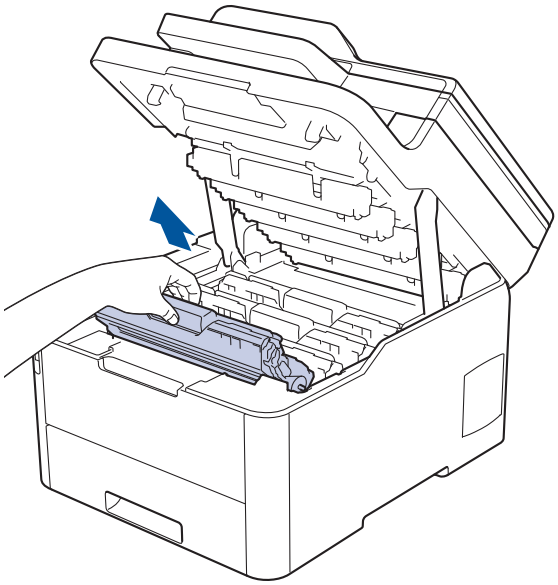

CAUTION

We recommend placing the toner cartridge and drum unit assemblies on a clean, flat surface with disposable paper underneath it in case you accidentally spill or scatter toner.

IMPORTANT

To prevent damage to the machine from static electricity, DO NOT touch the electrodes shown in the illustration.

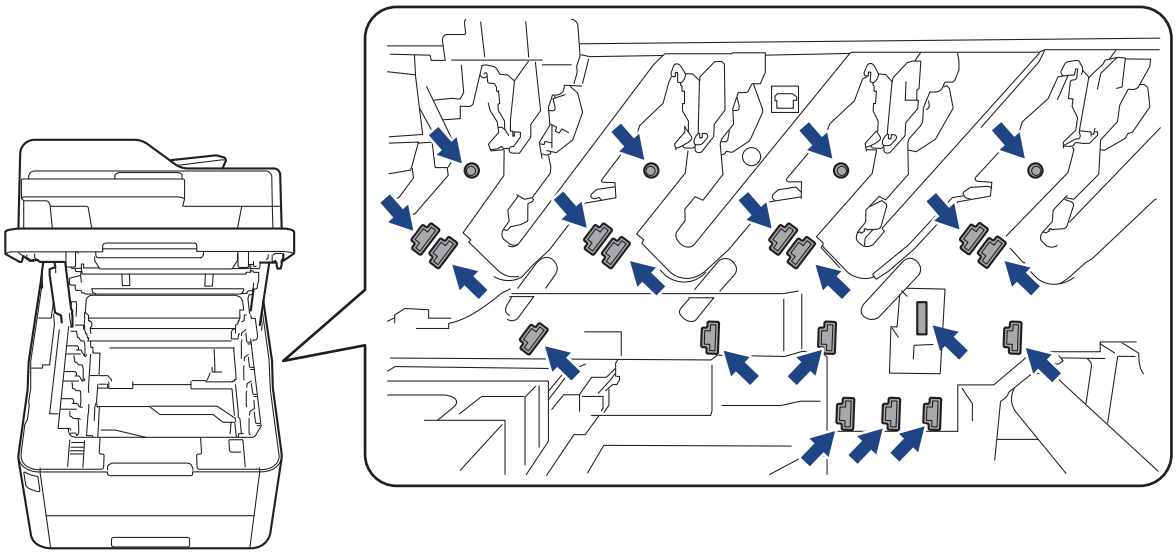

4. Hold the green handle of the belt unit and lift the belt unit up, and then pull it out without letting it touch the machine.

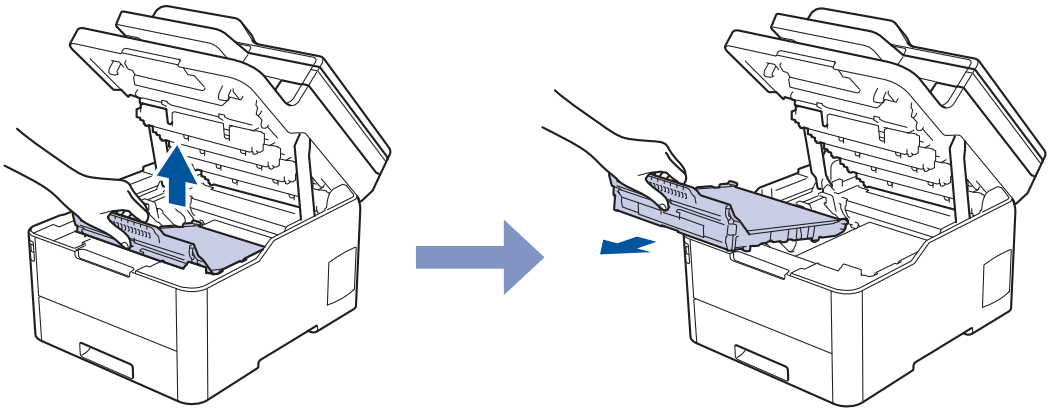

NOTE

To avoid print quality problems, DO NOT touch the shaded parts shown in the illustrations.

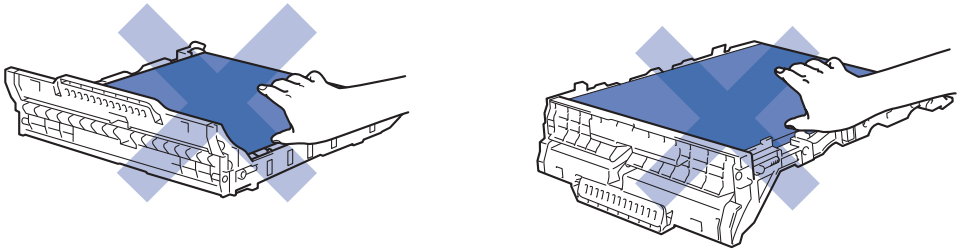

5. Remove the orange packing material and discard it.

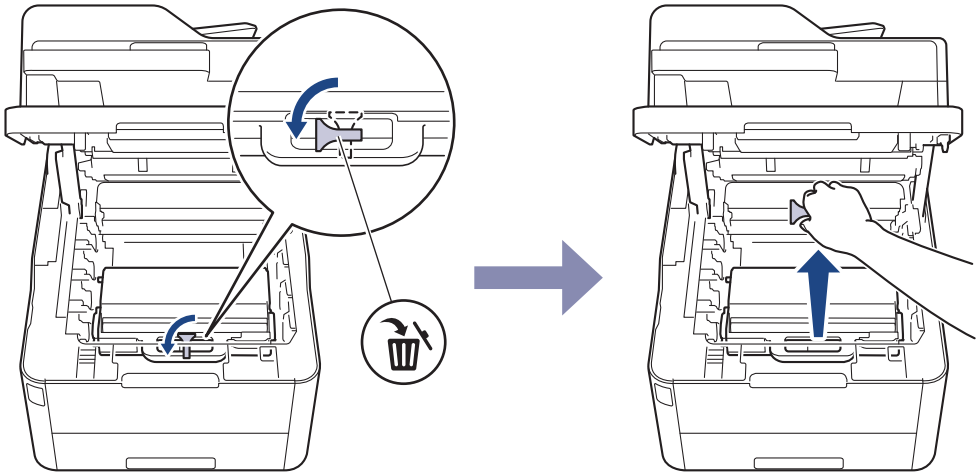

This step is only necessary when you are replacing the waste toner box for the first time, and is not required for the replacement waste toner box. The orange packing pieces are installed at the factory to protect your machine during shipment.

6. Hold the green handle of the waste toner box and remove the waste toner box from the machine.

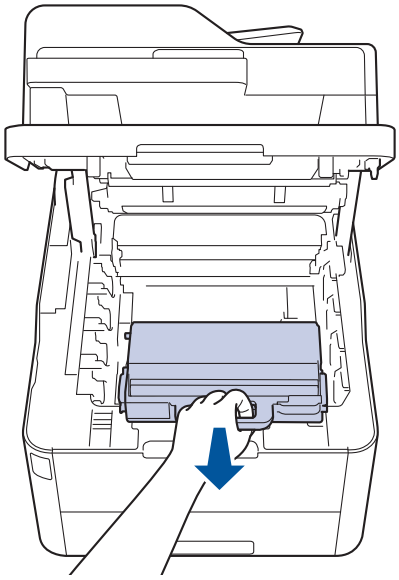

DO NOT reuse the waste toner box.

7. Unpack the new waste toner box and install the new waste toner box in the machine. Make sure the waste toner box is level and fits firmly into place.

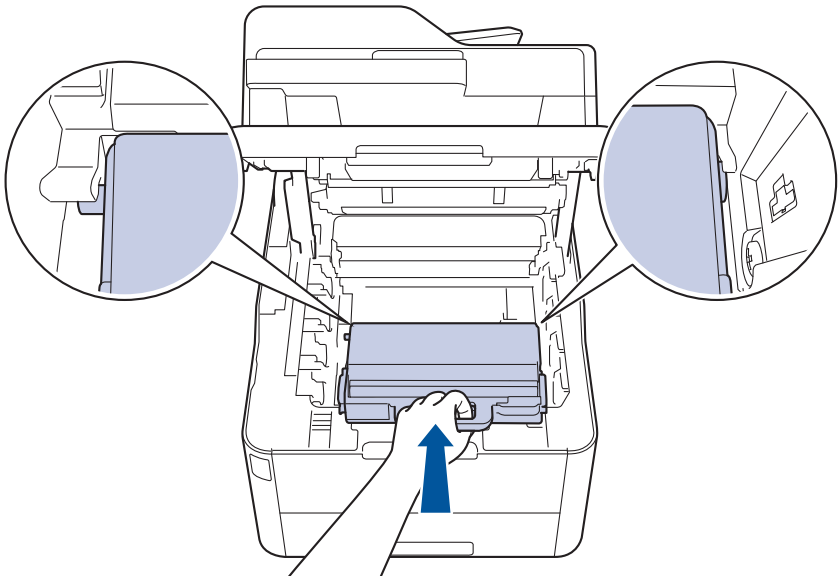

NOTE

To avoid print quality problems, DO NOT touch the shaded parts shown in the illustrations.

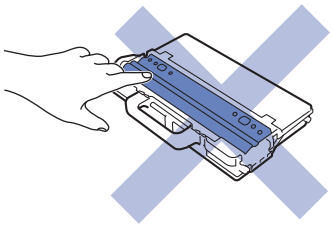

8. Reinsert the belt unit into the machine.

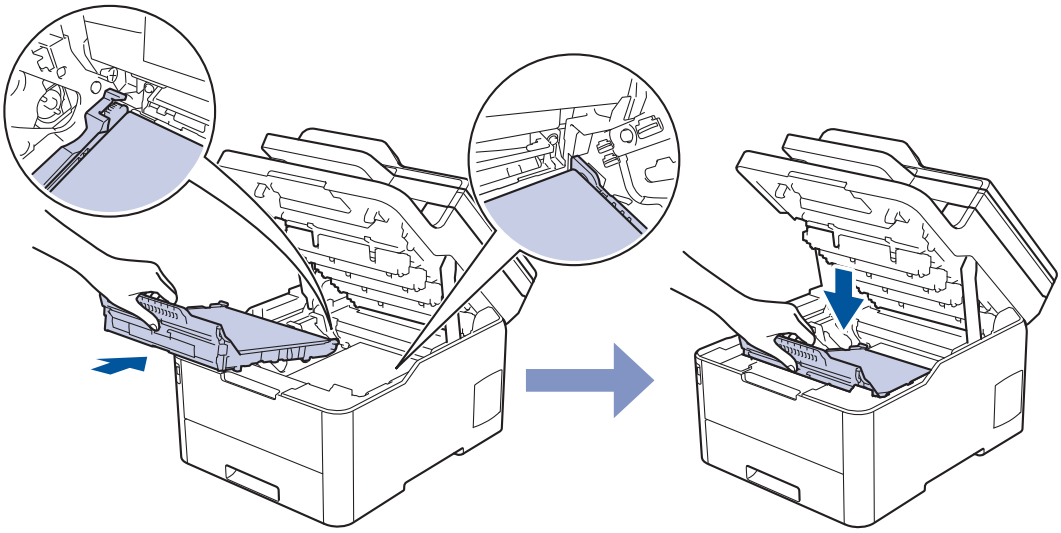

9. Reinsert each toner cartridge and drum unit assembly into the machine. Make sure that you match the toner cartridge colour to the same colour label on the machine for all four toner cartridge and drum unit assemblies.

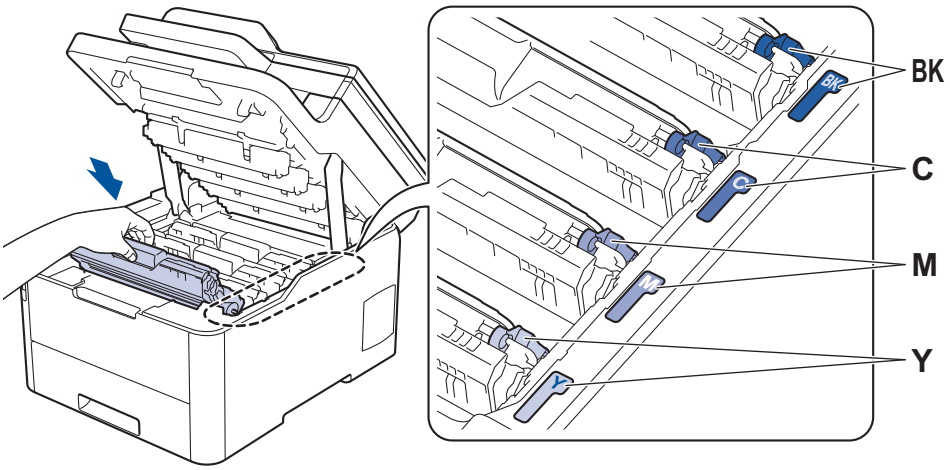

10. Close the machine's top cover.

Related Information

- Replace Supplies

Related Topics:

- Error and Maintenance Messages

Clean the Machine

Clean the outside and inside of the machine regularly with a dry, lint-free cloth.

When you replace the toner cartridge or the drum unit, make sure you clean the inside of the machine. If printed pages are stained with toner, clean the inside of the machine with a dry, lint-free cloth.

WARNING

- DO NOT use flammable substances, any type of spray, or an organic solvent/liquid containing alcohol or ammonia to clean the inside or outside of the product. Doing so could cause a fire. Instead, use only a dry, lint-free cloth.

IMPORTANT

- DO NOT use isopropyl alcohol to remove dirt from the control panel. It may crack the panel.
- To avoid print quality problems, DO NOT touch the shaded parts shown in the illustrations.

Toner Cartridge

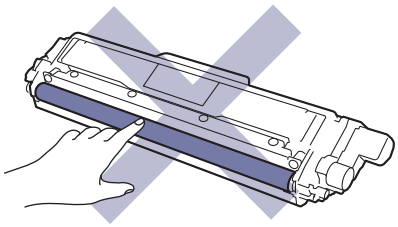

Drum Unit

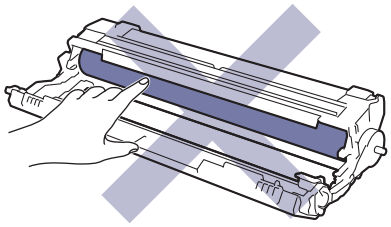

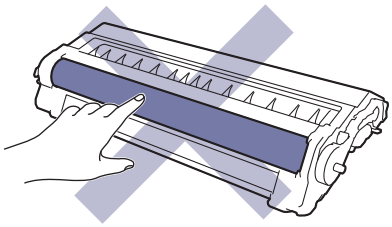

Belt Unit

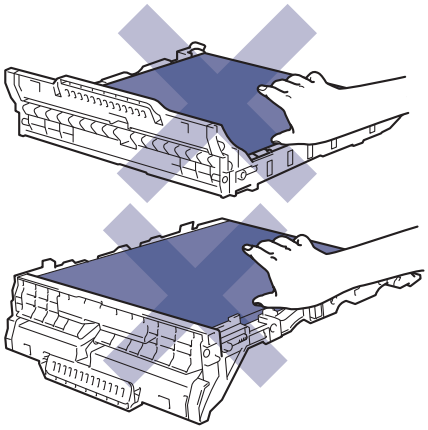

Waste Toner Box

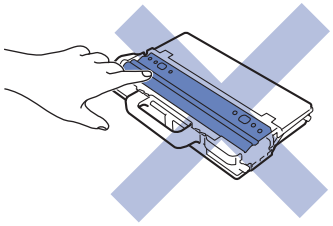

Related Information

- Routine Maintenance
  - Clean the Scanner
  - Clean the LED Heads
  - Clean the Touchscreen LCD
  - Clean the Corona Wires
  - Clean the Drum Unit
  - Clean the Paper Pick-up Rollers

Clean the Scanner

1. Press and hold ⏻ to turn the machine off.
2. Lift the document cover (1). Clean the white plastic surface (2) and scanner glass (3) underneath it with a soft lint-free cloth moistened with water.

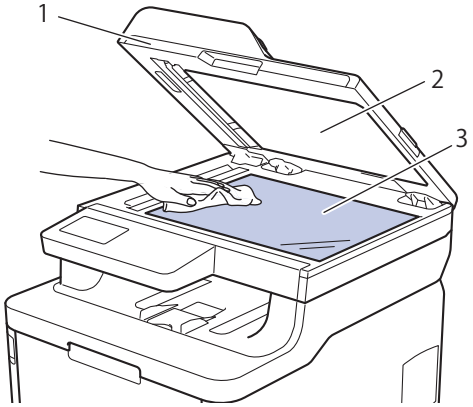

3. In the ADF unit, clean the white bar (1) and the scanner glass strip (2) underneath it with a soft lint-free cloth moistened with water.

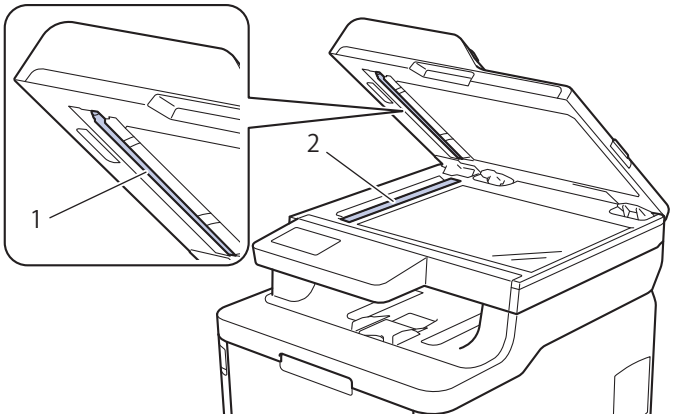

4. Open the scanner glass cover (1), and then clean the other white bar (2) and scanner glass strip (3) (supported models only).

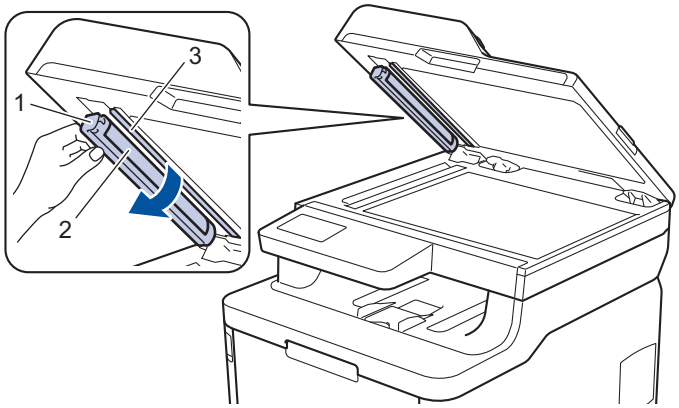

5. Close the document cover.
6. Press ⏻ to turn the machine on.

Related Information

- Clean the Machine

Clean the LED Heads

If there is a problem with the print quality, such as light or faded colours, white streaks, or bands that run down the page, clean the LED heads as follows:

1. Press and hold ⏻ to turn the machine off.
2. Open the top cover until it locks in the open position.

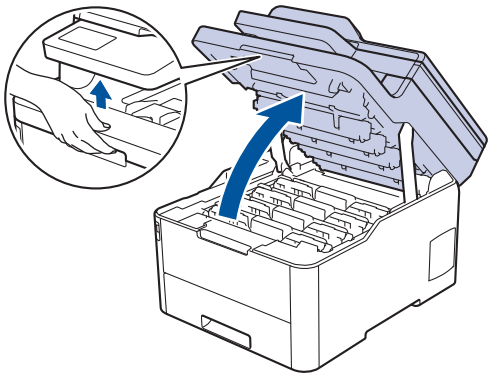

3. Wipe each LED head window (1) with a dry, soft, lint-free cloth. Do not touch the windows with your fingers.

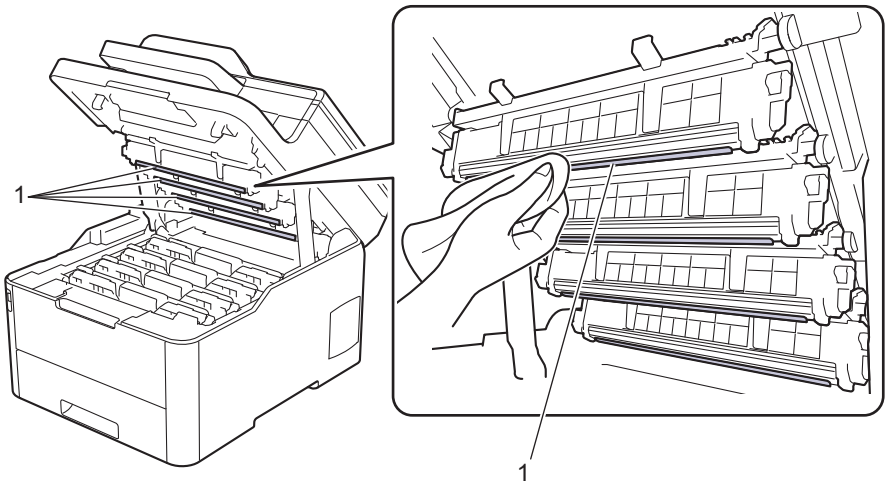

4. Close the machine's top cover.
5. Press ⏻ to turn the machine on.

Related Information

- Clean the Machine

Related Topics:

- Improve the Print Quality

Clean the Touchscreen LCD

Related Models: MFC-L3710CW/MFC-L3735CDN/MFC-L3745CDW/MFC-L3750CDW/MFC-L3770CDW

IMPORTANT

DO NOT use any type of liquid cleaners (including ethanol).

1. Press and hold ⏻ to turn the machine off.
2. Clean the touchscreen with a dry, soft lint-free cloth.

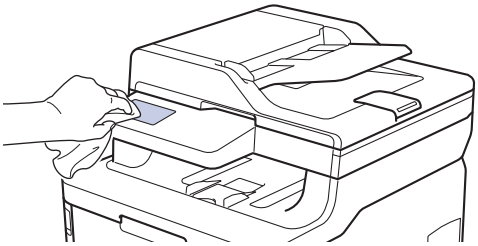

3. Press ⏻ to turn the machine on.

Related Information

- Clean the Machine

Clean the Corona Wires

1. Open the top cover until it locks in the open position.

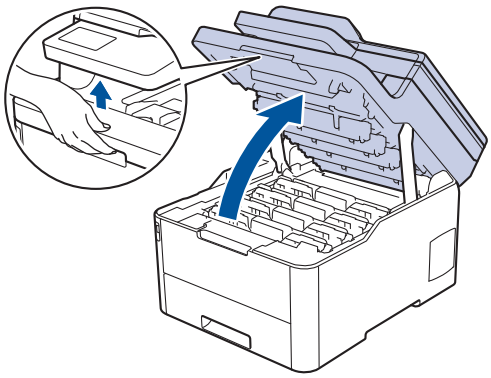

WARNING

HOT SURFACE

The machine's internal parts will be extremely hot. Wait for the machine to cool down before touching them.

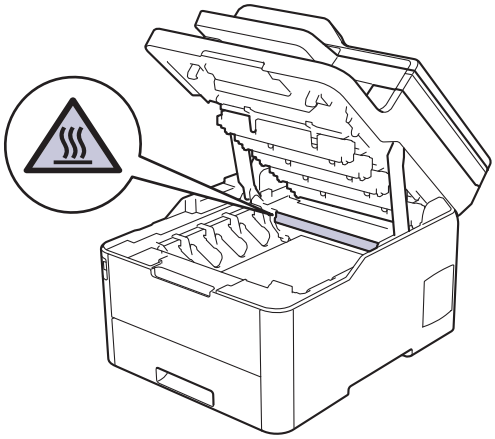

2. Remove the toner cartridge and drum unit assemblies.

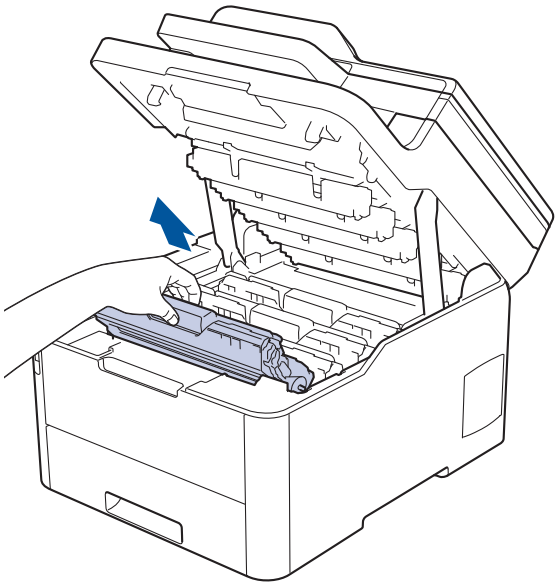

⚠ CAUTION

We recommend placing the toner cartridge and drum unit assemblies on a clean, flat surface with disposable paper underneath it in case you accidentally spill or scatter toner.

IMPORTANT

To prevent damage to the machine from static electricity, DO NOT touch the electrodes shown in the illustration.

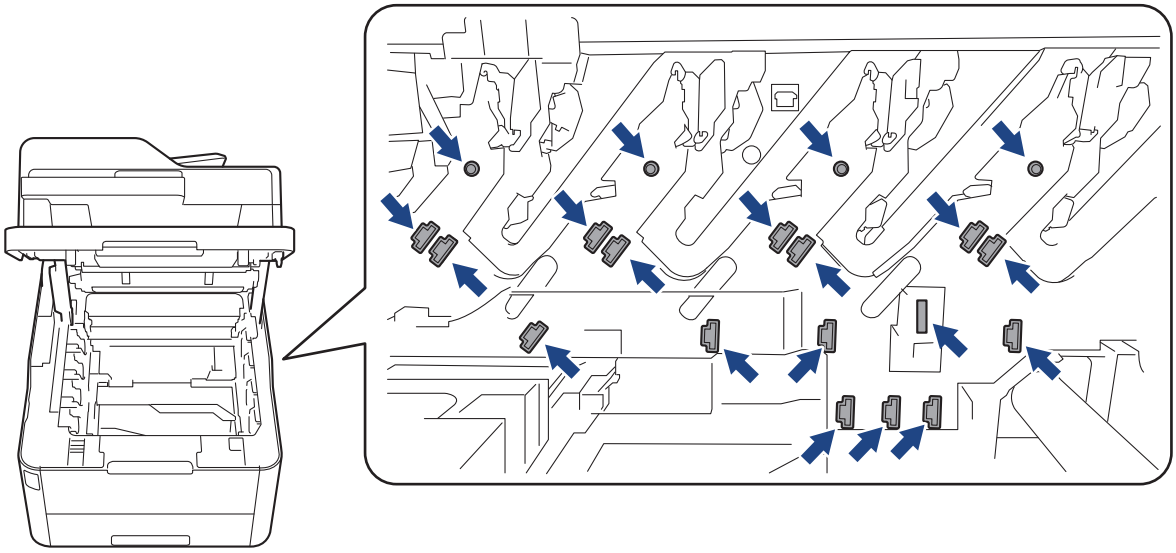

3. Clean the corona wire inside the drum unit by gently sliding the green tab from left to right and right to left several times. Repeat this for all the corona wires.

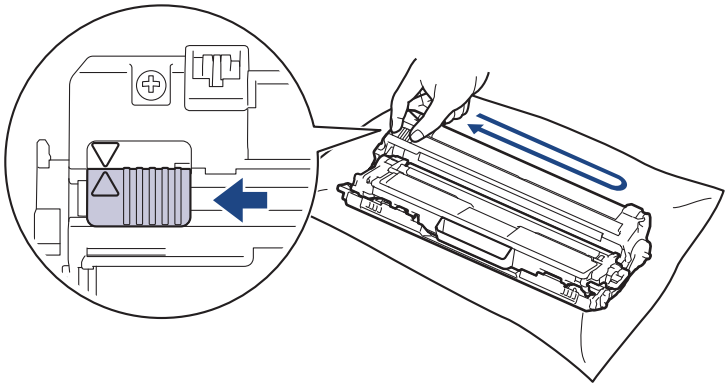

Be sure to return the green tab to the Home position (▲). The arrow on the tab must be aligned with the arrow on the drum unit. If it is not, printed pages may have a vertical stripe.

4. Slide the toner cartridge and drum unit assemblies into the machine. Make sure that you match the toner cartridge colour to the same colour label on the machine.

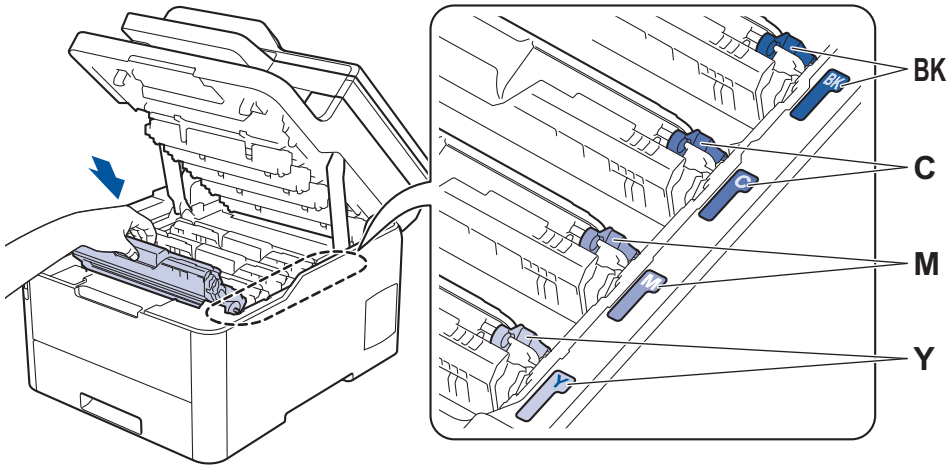

5. Close the machine's top cover.

Related Information

- Clean the Machine

Related Topics:

- Error and Maintenance Messages

Clean the Drum Unit

If your printout has black or white dots or other repeating marks at 94 mm intervals, the drum may have foreign material, such as glue from a label, stuck on the drum surface.

>> DCP-L3510CDW/DCP-L3551CDW
>> MFC-L3710CW/MFC-L3735CDN/MFC-L3745CDW/MFC-L3750CDW/MFC-L3770CDW

DCP-L3510CDW/DCP-L3551CDW

1. Make sure the machine is in Ready Mode.
2. Press **Menu**.
3. Press ▲ or ▼ to select the following:
   a. Select `[Print Reports]`. Press **OK**.
   b. Select `[Drum Dot Print]`. Press **OK**.
   The machine prints the Drum Dot Check Sheet.
4. Press and hold ⏻ to turn the machine off.
5. Open the top cover until it locks in the open position.

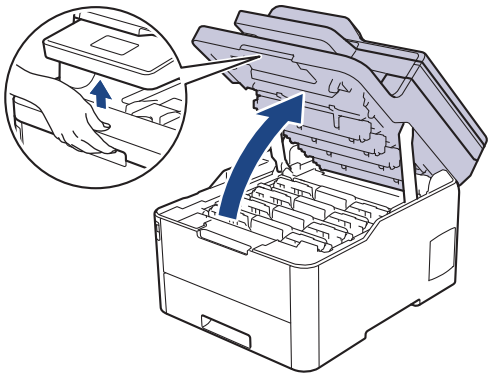

WARNING

HOT SURFACE

The machine's internal parts will be extremely hot. Wait for the machine to cool down before touching them.

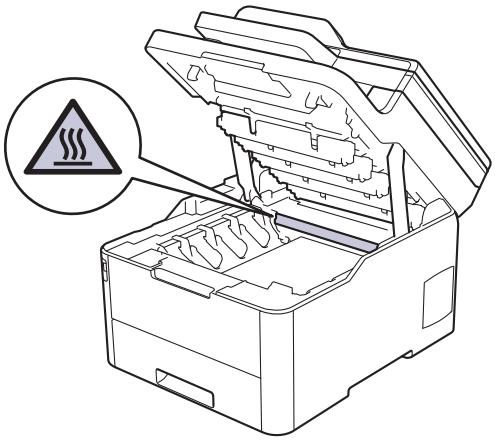

6. The colour of printed dots on the Drum Dot Check Sheet is the colour of the drum you should clean. Remove the toner cartridge and drum unit assembly that matches the colour causing the problem.

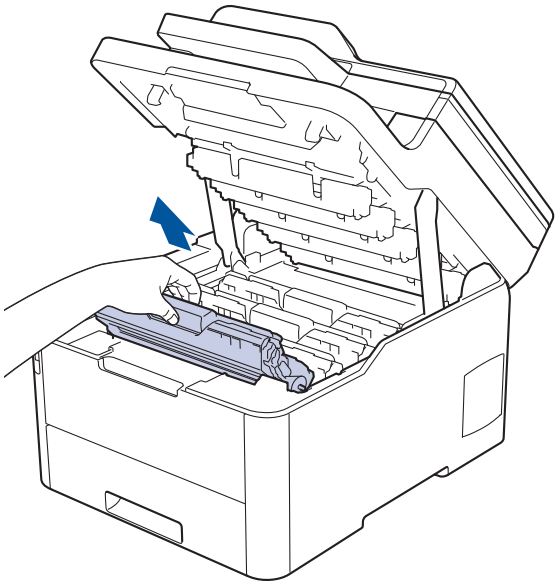

CAUTION

We recommend placing the toner cartridge and drum unit assemblies on a clean, flat surface with disposable paper underneath it in case you accidentally spill or scatter toner.

IMPORTANT

To prevent damage to the machine from static electricity, DO NOT touch the electrodes shown in the illustration.

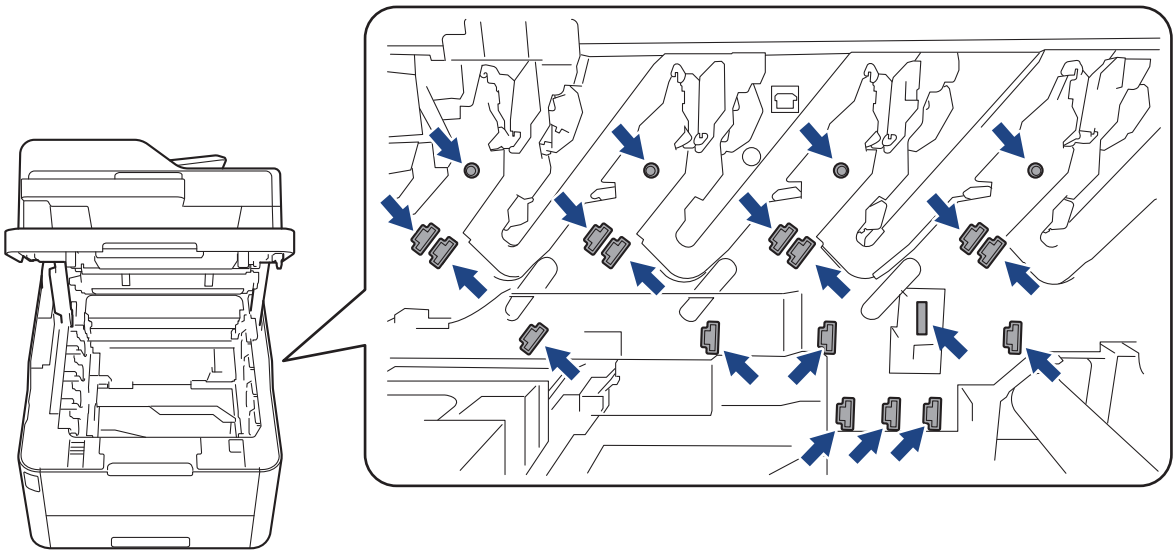

7. Push down the green lock lever and remove the toner cartridge from the drum unit.

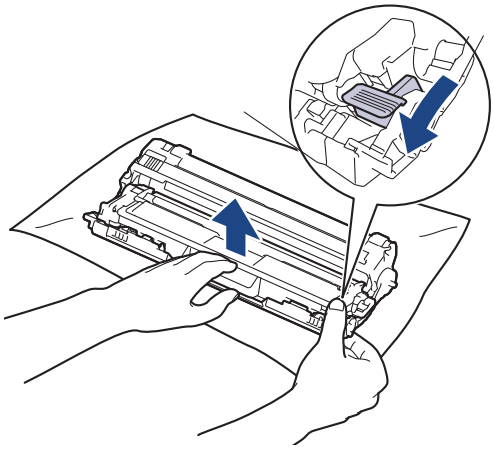

To avoid print quality problems, DO NOT touch any surface of the drum unit except the drum unit gear.

8. Lift the drum unit frame by the handle and rotate it counterclockwise, as shown.

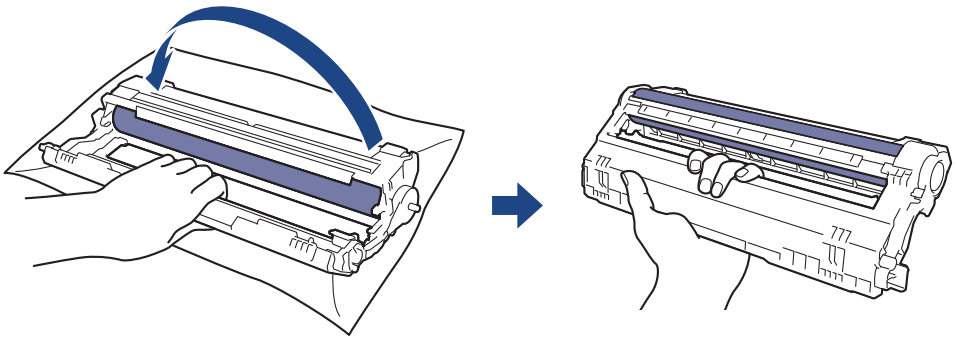

9. Loosen your grip so the frame drops forward, and then use your right hand to locate the drum unit gear inside the right side of the frame.

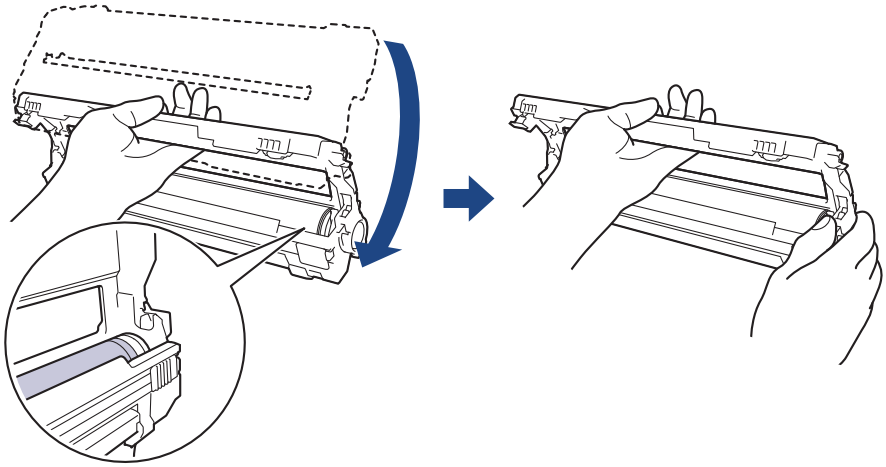

To avoid print quality problems, DO NOT touch any surface of the drum unit except the drum unit gear.

10. Tilt your left hand up to lift the frame so the numbered grid is visible, as shown. Use your right hand to rotate the drum while you look for marks or debris on the drum surface.

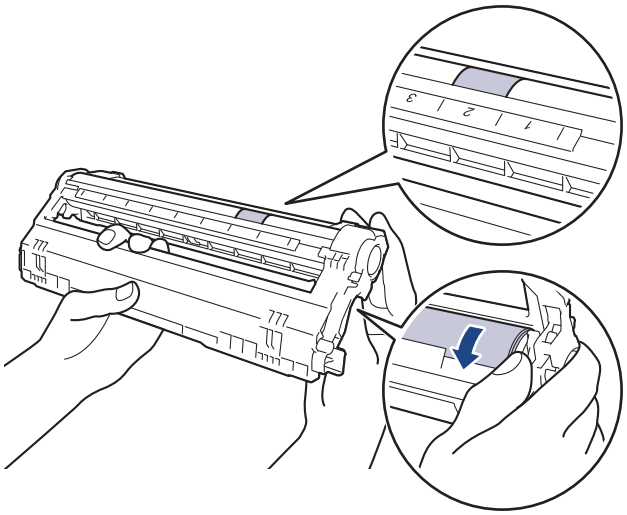

Use the column numbers next to the drum roller to find the mark. For example, a dot in column 2 on the Drum Dot Check Sheet would mean that there is a mark in the “2” region of the drum.

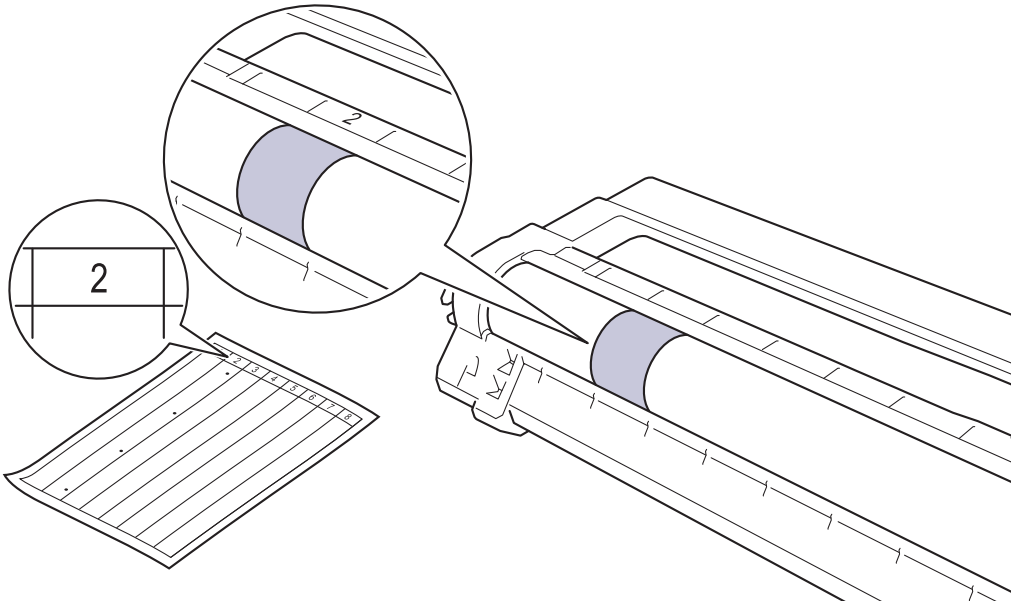

11. Wipe the surface of the drum gently with a dry cotton swab until the mark on the surface comes off.

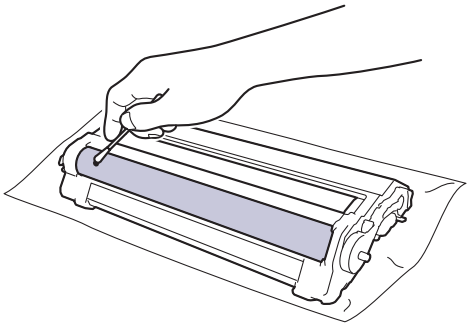

NOTE

DO NOT clean the surface of the photosensitive drum with a sharp object or any liquids.

12. Reinsert the toner cartridge firmly into the drum unit until you hear it lock into place.

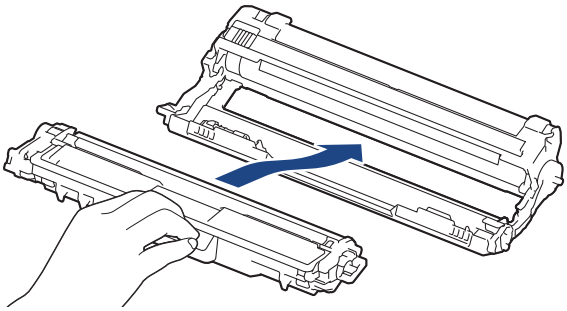

Make sure you put the toner cartridge in correctly or it may separate from the drum unit.

13. Slide the toner cartridge and drum unit assemblies into the machine. Make sure that you match the toner cartridge colour to the same colour label on the machine.

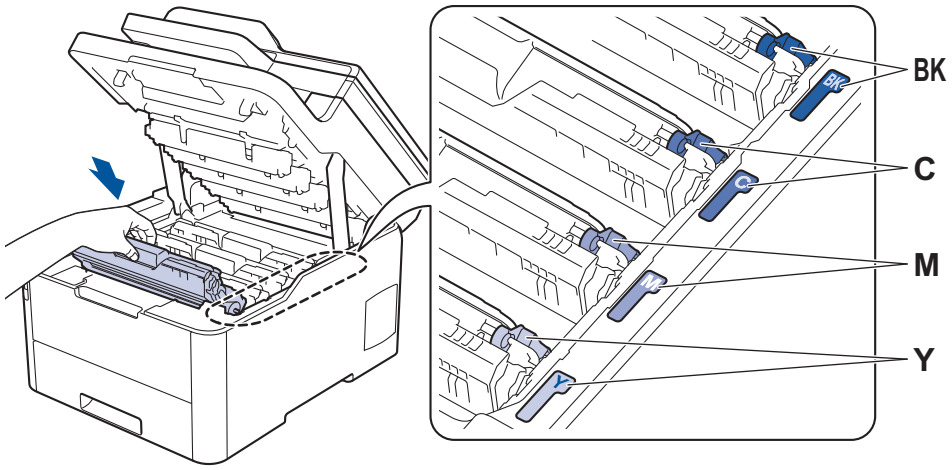

14. Close the machine's top cover.
15. Press ⏻ to turn the machine on.

MFC-L3710CW/MFC-L3735CDN/MFC-L3745CDW/MFC-L3750CDW/MFC-L3770CDW

1. Make sure the machine is in Ready Mode.
2. Press [Settings] > [All Settings] > [Print Reports] > [Drum Dot Print].
3. Press [Yes].

   The machine prints the Drum Dot Check Sheet.
4. Press and hold ⏻ to turn the machine off.
5. Open the top cover until it locks in the open position.

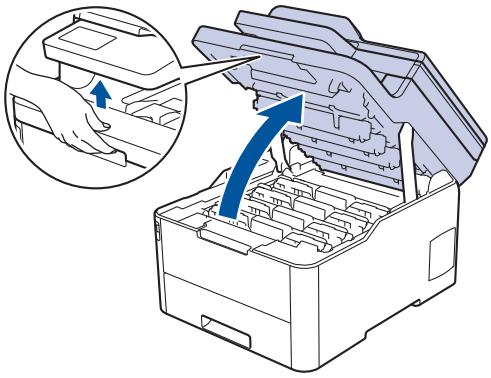

WARNING

HOT SURFACE

The machine's internal parts will be extremely hot. Wait for the machine to cool down before touching them.

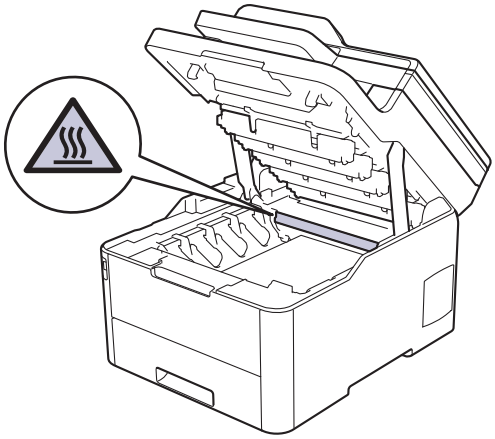

6. The colour of printed dots on the Drum Dot Check Sheet is the colour of the drum you should clean. Remove the toner cartridge and drum unit assembly that matches the colour causing the problem.

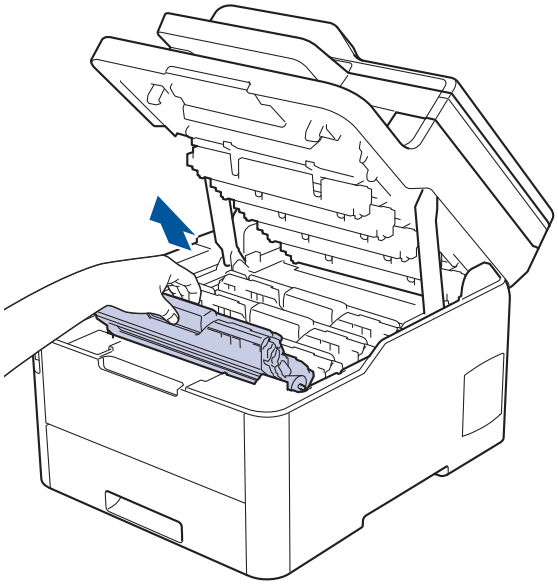

CAUTION

We recommend placing the toner cartridge and drum unit assemblies on a clean, flat surface with disposable paper underneath it in case you accidentally spill or scatter toner.

IMPORTANT

To prevent damage to the machine from static electricity, DO NOT touch the electrodes shown in the illustration.

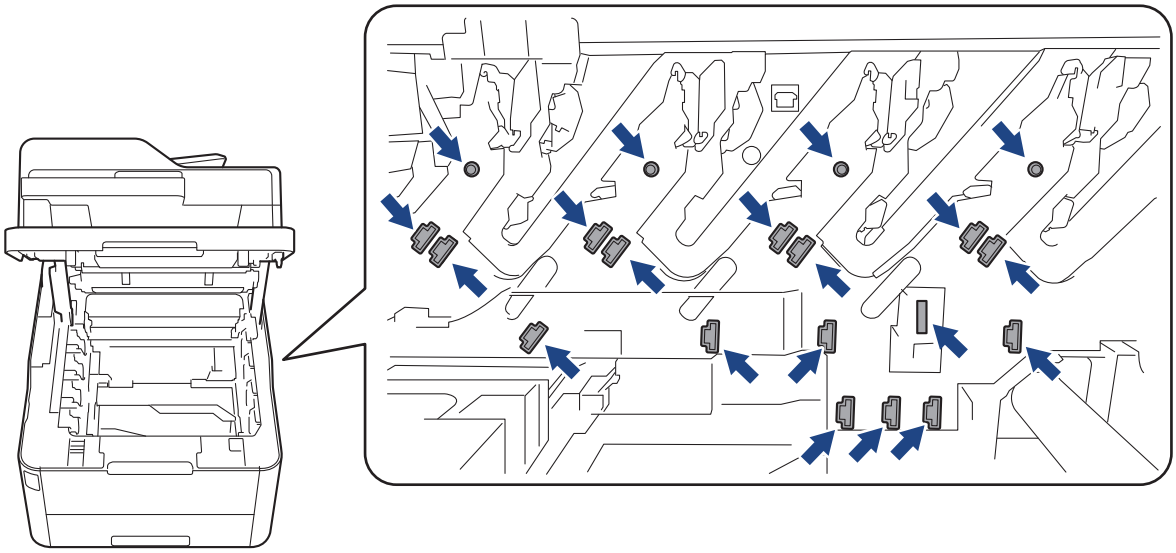

7. Push down the green lock lever and remove the toner cartridge from the drum unit.

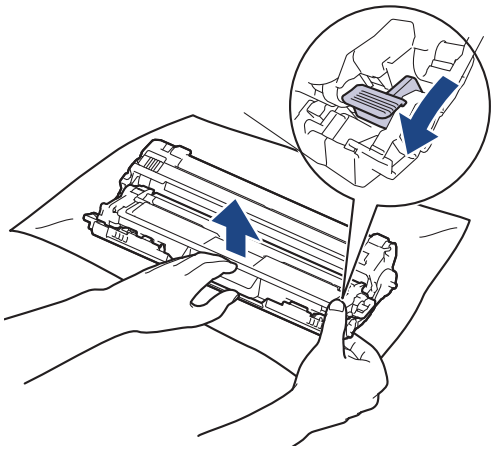

To avoid print quality problems, DO NOT touch any surface of the drum unit except the drum unit gear.

8. Lift the drum unit frame by the handle and rotate it counterclockwise, as shown.

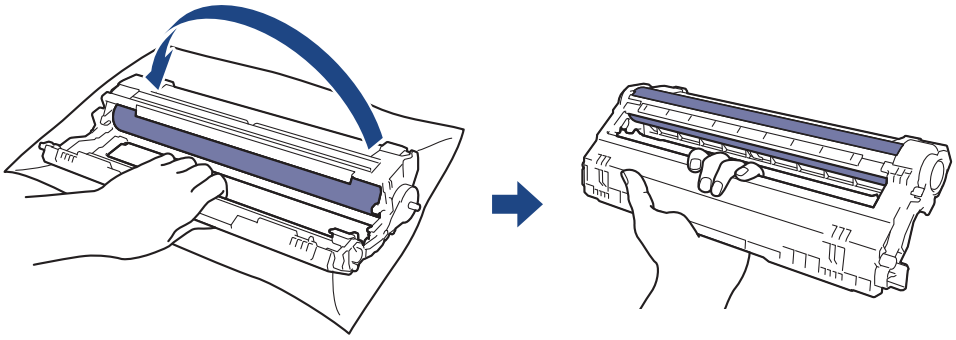

9. Loosen your grip so the frame drops forward, and then use your right hand to locate the drum unit gear inside the right side of the frame.

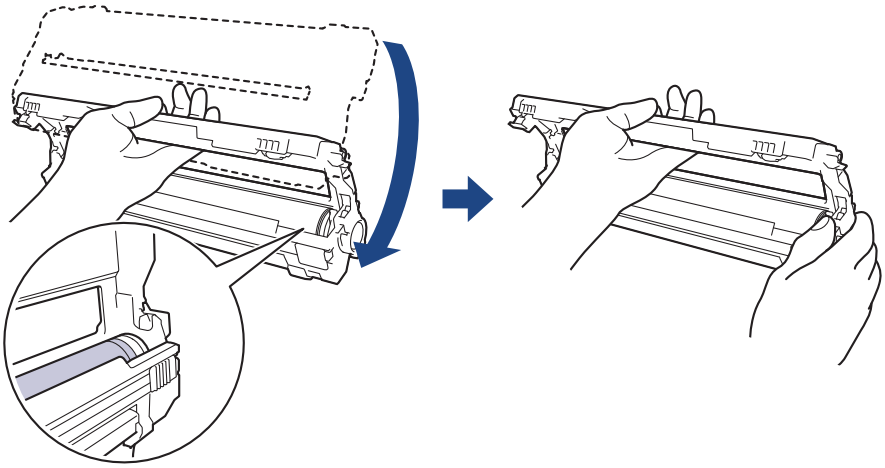

To avoid print quality problems, DO NOT touch any surface of the drum unit except the drum unit gear.

10. Tilt your left hand up to lift the frame so the numbered grid is visible, as shown. Use your right hand to rotate the drum while you look for marks or debris on the drum surface.

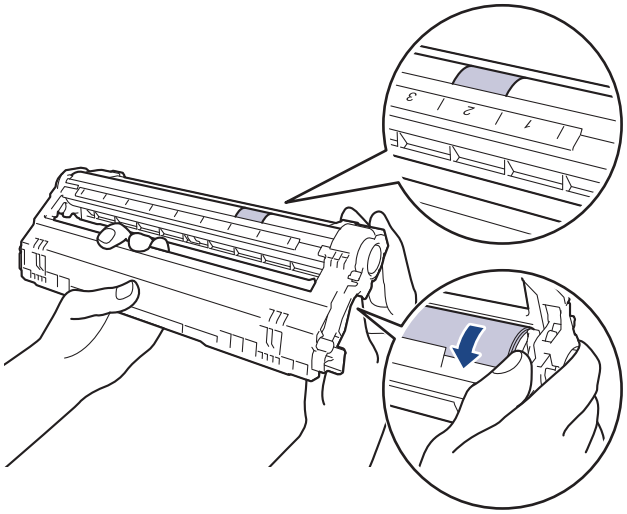

Use the column numbers next to the drum roller to find the mark. For example, a dot in column 2 on the Drum Dot Check Sheet would mean that there is a mark in the “2” region of the drum.

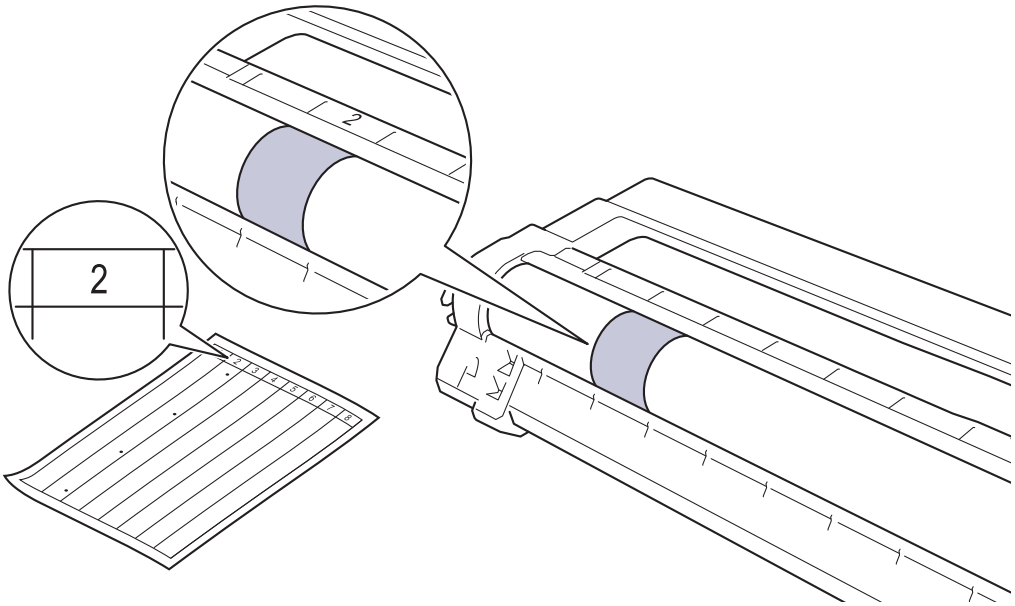

11. Wipe the surface of the drum gently with a dry cotton swab until the mark on the surface comes off.

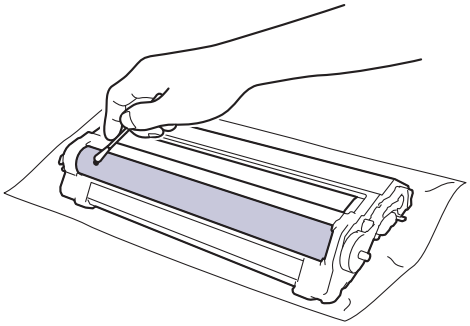

NOTE

DO NOT clean the surface of the photosensitive drum with a sharp object or any liquids.

12. Reinsert the toner cartridge firmly into the drum unit until you hear it lock into place.

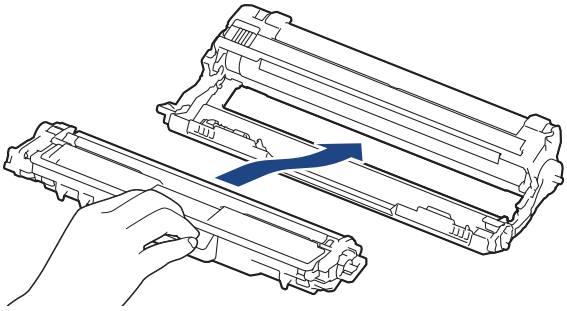

Make sure you put the toner cartridge in correctly or it may separate from the drum unit.

13. Slide the toner cartridge and drum unit assemblies into the machine. Make sure that you match the toner cartridge colour to the same colour label on the machine.

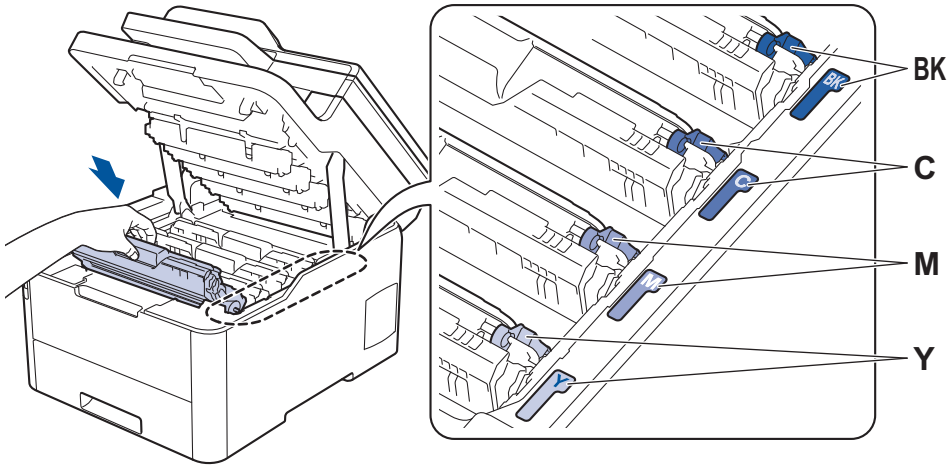

14. Close the machine's top cover.
15. Press ⏻ to turn the machine on.

Related Information

- Clean the Machine

Related Topics:

- Improve the Print Quality

Clean the Paper Pick-up Rollers

Cleaning the paper pick-up rollers periodically may prevent paper jams by ensuring that paper feeds correctly.

If you have paper feed problems, clean the pick-up rollers as follows:

1. Press and hold ⏻ to turn the machine off.
2. Pull the paper tray completely out of the machine.

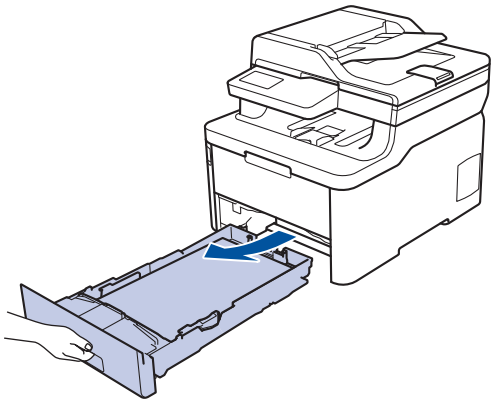

3. If paper is loaded or something is stuck inside in the paper tray, remove it.
4. Tightly wring out a lint-free cloth soaked in lukewarm water, and then wipe the separator pad on the paper tray to remove dust.

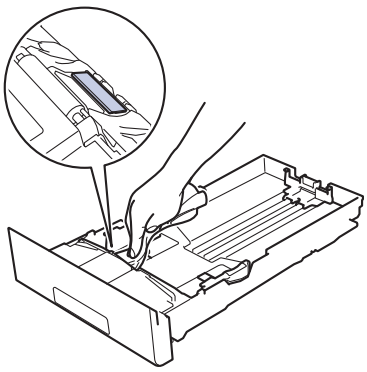

5. Wipe the two pick-up rollers inside the machine to remove dust.

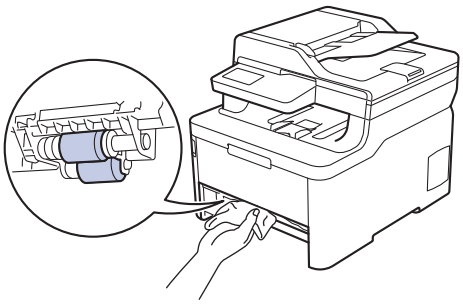

6. Reload the paper and put the paper tray firmly back in the machine.
7. Press ⏻ to turn the machine on.

Related Information

- Clean the Machine

Related Topics:

- Printing Problems

Calibrate Colour Output

The output density for each colour may vary depending on the machine's environment, including factors like temperature and humidity. Calibrating your machine helps improve the output colour density.

If you are using the Mac printer driver, the printer driver automatically retrieves the calibration data. To retrieve the data manually, you must perform the calibration using Brother's **Status Monitor**.

>> DCP-L3510CDW/DCP-L3551CDW
>> MFC-L3710CW/MFC-L3735CDN/MFC-L3745CDW/MFC-L3750CDW/MFC-L3770CDW

DCP-L3510CDW/DCP-L3551CDW

1. Press **Menu**.
2. Press ▲ or ▼ to select the following:
   a. Select `[Printer]`. Press **OK**.
   b. Select `[Clr Correction]`. Press **OK**.
   c. Select `[Calibration]`. Press **OK**.
   d. Select `[Calibrate]`. Press **OK**.
3. Press ▲ to select the `[Yes]` option.

Calibration starts automatically, and will take a few minutes.

4. Press **Stop/Exit**.

MFC-L3710CW/MFC-L3735CDN/MFC-L3745CDW/MFC-L3750CDW/MFC-L3770CDW

1. Press `[Toner]` > `[Calibration]` > `[Calibrate]`.
2. Press `[Yes]`.

Calibration starts automatically, and will take a few minutes.

3. Press .

Related Information

- Routine Maintenance
  - Reset the Machine's Calibration Settings

Related Topics:

- Error and Maintenance Messages
- Improve the Print Quality
- Monitor the Status of the Machine from Your Computer (Windows)
- Monitor the Status of the Machine from Your Computer (Mac)

Reset the Machine's Calibration Settings

If the output colour differs from what you see on your monitor, try resetting your machine's calibration parameters.

>> DCP-L3510CDW/DCP-L3551CDW
>> MFC-L3710CW/MFC-L3735CDN/MFC-L3745CDW/MFC-L3750CDW/MFC-L3770CDW

DCP-L3510CDW/DCP-L3551CDW

1. Press **Menu**.
2. Press ▲ or ▼ to select the following:
   a. Select [Printer]. Press **OK**.
   b. Select [Clr Correction]. Press **OK**.
   c. Select [Calibration]. Press **OK**.
   d. Select [Reset]. Press **OK**.
3. Press ▲ to select the [Reset] option.
4. Press **Stop/Exit**.

MFC-L3710CW/MFC-L3735CDN/MFC-L3745CDW/MFC-L3750CDW/MFC-L3770CDW

1. Press [Toner] > [Calibration] > [Reset].
2. Press [Yes].
3. Press .

Related Information

- Calibrate Colour Output

Correct Colour Print Alignment (Colour Registration)

If solid areas of colour or images have cyan, magenta or yellow fringes, use the Colour Registration function.

>> DCP-L3510CDW/DCP-L3551CDW
>> MFC-L3710CW/MFC-L3735CDN/MFC-L3745CDW/MFC-L3750CDW/MFC-L3770CDW

DCP-L3510CDW/DCP-L3551CDW

1. Press **Menu**.
2. Press ▲ or ▼ to select the following:
   a. Select [Printer]. Press **OK**.
   b. Select [Clr Correction]. Press **OK**.
   c. Select [Registration]. Press **OK**.
3. Press ▲ to select the [Yes] option.

Colour registration starts automatically, and will take around 10 seconds or more.

4. Press **Stop/Exit**.

MFC-L3710CW/MFC-L3735CDN/MFC-L3745CDW/MFC-L3750CDW/MFC-L3770CDW

1. Press [Toner] > [Registration].
2. Press [Yes].

Colour registration starts automatically, and will take around 10 seconds or more.

3. Press .

Related Information

- Routine Maintenance

Check the Remaining Part Life

>> DCP-L3510CDW/DCP-L3551CDW
>> MFC-L3710CW/MFC-L3735CDN/MFC-L3745CDW/MFC-L3750CDW/MFC-L3770CDW

DCP-L3510CDW/DCP-L3551CDW

1. Press **Menu**.
2. Press ▲ or ▼ to select the following:
   a. Select [Machine Info.]. Press **OK**.
   b. Select [Parts Life]. Press **OK**.
3. Press ▲ or ▼ to select the machine part you want to check, and then press **OK**.
   The LCD displays the approximate remaining part life.
4. Press **Stop/Exit**.

MFC-L3710CW/MFC-L3735CDN/MFC-L3745CDW/MFC-L3750CDW/MFC-L3770CDW

1. Press [Settings] > [All Settings] > [Machine Info.] > [Parts Life].
2. Press the machine part you want to check.
   The LCD displays the approximate remaining part life.
3. Press .

To display the approximate remaining life of the toner cartridge, press on the LCD.

Related Information

- Routine Maintenance

Pack and Ship Your Brother Machine

WARNING

- This product is heavy and weighs more than 21.9 kg. To prevent possible injuries, at least two people should lift the product by holding it at the front and back.
- When you move the machine, carry the machine as shown in the illustration.

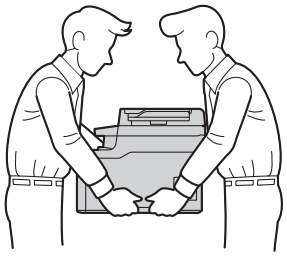

- If for any reason you must ship your machine, carefully repack the machine in the original packaging to avoid any damage during transit. The machine should be adequately insured with the carrier.

1. Press and hold ⏻ to turn the machine off. Leave the machine off for at least 10 minutes to cool down.
2. Disconnect all the cables, and then unplug the power cord from the electrical socket.
3. Put the machine into the bag it originally came in.
4. Pack the machine, the printed materials, and the AC power cord (if applicable) in the original carton with the original packing material as shown.

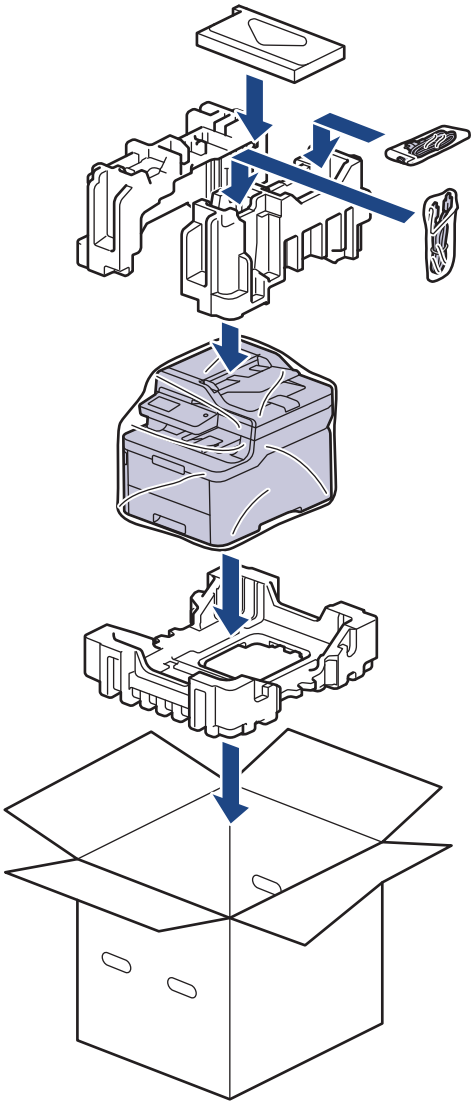

5. Close the carton and tape it shut.

Related Information

- Routine Maintenance

Replace Periodic Maintenance Parts

Replace the following parts regularly to maintain print quality. The parts listed below must be replaced after printing approximately 50,000 pages [1] for the Fuser Unit, PF Kit for the Paper Tray, and PF Kit MP.

Contact Brother customer service or your local Brother dealer when the following message appears on the LCD:

LCD Message	Description
`Replace Fuser` [2]	Replace the Fuser Unit.
`Replace PF Kit1` [2]	Replace the Paper Feeding Kit for the Paper Tray.
`Replace PF KitMP` [2]	Replace the Paper Feeding Kit for the Multi-purpose Tray.

Related Information

- Routine Maintenance

[1] Letter or A4 size single-sided pages

[2] Replacement frequency depends on the complexity of printed pages, percentage of coverage, and the type of media used.

Machine Settings

Customise settings and features, create shortcuts, and work with options displayed on the machine's LCD to make your Brother machine a more efficient work tool.

- Change Machine Settings from the Control Panel
- Change Machine Settings from Your Computer

Change Machine Settings from the Control Panel

- In the Event of Power Failure (Memory Storage)
- General Settings
- Save Your Favourite Settings as a Shortcut
- Print Reports
- Settings and Features Tables

In the Event of Power Failure (Memory Storage)

Your menu settings are stored permanently, and in the event of a power failure will not be lost.Temporary settings (for example, Contrast, Overseas Mode) will be lost.

- During a power failure, the machine will retain the date and time and programmed fax timer jobs (for example: Delayed Fax) for approximately 60 hours. Other fax jobs in the machine's memory will not be lost.

Related Information

- Change Machine Settings from the Control Panel

General Settings

- Adjust the Machine's Volume
- Change for Daylight Saving Time Automatically
- Set Sleep Mode Countdown
- About Deep Sleep Mode
- Set Auto Power Off Mode
- Set the Date and Time
- Set the Time Zone
- Adjust the LCD Backlight Brightness
- Change How Long the LCD Backlight Stays On
- Set Your Station ID
- Set Tone or Pulse Dialling Mode
- Reduce Toner Consumption
- Add a Prefix to Every Fax Number
- Prevent Dialling a Wrong Number (Dial Restriction)
- Reduce Printing Noise
- Change the Language on the LCD

Adjust the Machine's Volume

>> DCP-L3510CDW/DCP-L3551CDW
>> MFC-L3710CW/MFC-L3735CDN/MFC-L3745CDW/MFC-L3750CDW/MFC-L3770CDW

DCP-L3510CDW/DCP-L3551CDW

1. Press **Menu**.
2. Press ▲ or ▼ to select the following:
   a. Select `[General Setup]`. Press **OK**.
   b. Select `[Beep]`. Press **OK**.
3. Press ▲ or ▼ to display the `[High]`, `[Med]`, `[Low]`, or `[Off]` option, and then press **OK**.

MFC-L3710CW/MFC-L3735CDN/MFC-L3745CDW/MFC-L3750CDW/MFC-L3770CDW

1. Do one of the following:
   - For MFC models:

     Press `[Settings]` > `[All Settings]` > `[General Setup]` > `[Volume]`.
   - For DCP models:

     Press `[Settings]` > `[All Settings]` > `[General Setup]` > `[Beep]`.
2. Press one of the following options (MFC models):

   (The options will vary depending on your machine.)
   - `[Ring]`

     Adjust the ring volume.
   - `[Beep]`

     Adjust the volume of the beep you hear when you press a button, make a mistake, or after you send or receive a fax.
   - `[Speaker]`

     Adjust the speaker volume.
3. Select the `[Off]`, `[Low]`, `[Med]` or `[High]` option, and then press the option you want.
4. Press .

Related Information

- General Settings

Change for Daylight Saving Time Automatically

You can program the machine to change automatically for Daylight Saving Time.

It will reset itself forward one hour in the spring, and back one hour in the autumn. Make sure you have set the correct date and time in the Date & Time setting.

This feature is available only in some countries.

>> DCP-L3510CDW/DCP-L3551CDW
>> MFC-L3710CW/MFC-L3735CDN/MFC-L3745CDW/MFC-L3750CDW/MFC-L3770CDW

DCP-L3510CDW/DCP-L3551CDW

1. Press **Menu**.
2. Press ▲ or ▼ to select the following:
   a. Select `[Initial Setup]`. Press **OK**.
   b. Select `[Date&Time]`. Press **OK**.
   c. Select `[Auto Daylight]`. Press **OK**.
3. Press ▲ or ▼ to display the `[On]` or `[Off]` option, and then press **OK**.
4. Press **Stop/Exit**.

MFC-L3710CW/MFC-L3735CDN/MFC-L3745CDW/MFC-L3750CDW/MFC-L3770CDW

1. Press `[Settings]` > `[All Settings]` > `[Initial Setup]` > `[Date & Time]` > `[Auto Daylight]`.
2. Press `[On]` or `[Off]`.
3. Press .

Related Information

- General Settings

Set Sleep Mode Countdown

The Sleep Mode (or Power Save Mode) setting can reduce power consumption. When the machine is in Sleep Mode, it acts as though it is turned off. The machine will wake up and start printing when it receives a print job or a fax. Use these instructions to set a time delay (countdown) before the machine enters Sleep Mode.

- You can choose how long the machine must be idle before it goes into Sleep Mode.
- The timer will restart if any operation is carried out on the machine, such as receiving a print job.

>> DCP-L3510CDW/DCP-L3551CDW
>> MFC-L3710CW/MFC-L3735CDN/MFC-L3745CDW/MFC-L3750CDW/MFC-L3770CDW

DCP-L3510CDW/DCP-L3551CDW

1. Press **Menu**.
2. Press ▲ or ▼ to display the `[General Setup]` option, and then press **OK**.
3. Press ▲ or ▼ to display the `[Ecology]` option, and then press **OK**.
4. Press ▲ or ▼ to display the `[Sleep Time]` option, and then press **OK**.
5. Enter the length of time the machine (maximum 50 minutes) is idle before entering Sleep Mode, and then press **OK**.
6. Press **Stop/Exit**.

MFC-L3710CW/MFC-L3735CDN/MFC-L3745CDW/MFC-L3750CDW/MFC-L3770CDW

1. Press `[Settings]` > `[All Settings]` > `[General Setup]` > `[Ecology]` > `[Sleep Time]`.
2. Enter the length of time (maximum 50 minutes) the machine will remain idle before entering Sleep Mode, and then press `[OK]`.
3. Press .

Related Information

- General Settings

About Deep Sleep Mode

If the machine is in Sleep mode and does not receive any jobs for certain length of time, the machine will automatically enter Deep Sleep mode. The length of time is based on your specific model and settings.

Deep Sleep mode uses less power than Sleep mode.

Applicable Models	Machine's Control Panel in Deep Sleep Mode	Conditions That Will Wake the Machine
DCP-L3510CDW/ DCP-L3551CDW	The LCD displays `Deep Sleep`.	• The machine receives a job. • Someone presses a button on the control panel.
MFC-L3710CW/ MFC-L3735CDN/ MFC-L3745CDW/ MFC-L3750CDW/ MFC-L3770CDW	The LCD backlight turns off and the Power LED brightens and dims.	• The machine receives a job. • Someone presses , or the touchscreen LCD.

Related Information

- General Settings

Set Auto Power Off Mode

If the machine is in Deep Sleep Mode for certain length of time, based on your model and settings, the machine will go into Power Off Mode automatically. The machine does not go into Power Off Mode when the machine is connected to a network or a telephone line , or has secure print data in the memory(Available only for certain models).

- To start printing, press on the control panel and then send a print job.

>> DCP-L3510CDW/DCP-L3551CDW
>> MFC-L3710CW/MFC-L3735CDN/MFC-L3745CDW/MFC-L3750CDW/MFC-L3770CDW

DCP-L3510CDW/DCP-L3551CDW

1. Press **Menu**.
2. Press ▲ or ▼ to display the [General Setup] option, and then press **OK**.
3. Press ▲ or ▼ to display the [Ecology] option, and then press **OK**.
4. Press ▲ or ▼ to display the [Auto Power Off] option, and then press **OK**.
5. Press ▲ or ▼ to display the [8hours], [4hours], [2hours], [1hour], or [Off] option, and then press **OK**.
6. Press **Stop/Exit**.

MFC-L3710CW/MFC-L3735CDN/MFC-L3745CDW/MFC-L3750CDW/MFC-L3770CDW

1. Press [Settings] > [All Settings] > [General Setup] > [Ecology] > [Auto Power Off].
2. Press the [Off], [1hour], [2hours], [4hours] or [8hours] option you want.
3. Press .

Related Information

- General Settings

Set the Date and Time

>> DCP-L3510CDW/DCP-L3551CDW
>> MFC-L3710CW/MFC-L3735CDN/MFC-L3745CDW/MFC-L3750CDW/MFC-L3770CDW

DCP-L3510CDW/DCP-L3551CDW

1. Press **Menu**.
2. Press ▲ or ▼ to select the following:
   a. Select [Initial Setup]. Press **OK**.
   b. Select [Date&Time]. Press **OK**.
   c. Select [Date&Time]. Press **OK**.
3. Press ▲ or ▼ to set the last two digits of the year. Press **OK**. Repeat these steps for setting the month and day.
4. Press ▲ or ▼ to display the [12h Clock] or [24h Clock] option, and then press **OK**.
5. Do one of the following:
   - If you selected [12h Clock] as the format in the [Date&Time] setting, press ▲ or ▼ to set the hour. Press **OK**. Repeat these steps for setting the minute.

     Press ▲ or ▼ to display the [AM] or [PM] option, and then press **OK**.
   - If you selected [24h Clock] as the format in the [Date&Time] setting, press ▲ or ▼ to set the hour. Press **OK**. Repeat these steps for setting the minute.

     (For example: enter 19:45 for 7:45 PM.)
6. Press **Stop/Exit**.

MFC-L3710CW/MFC-L3735CDN/MFC-L3745CDW/MFC-L3750CDW/MFC-L3770CDW

1. Press [Settings] > [All Settings] > [Initial Setup] > [Date & Time] > [Date].
2. Enter the last two digits of the year using the LCD, and then press [OK].
3. Enter the two digits for the month using the LCD, and then press [OK].
4. Enter the two digits for the day using the LCD, and then press [OK].
5. Press [Time].
6. Enter the time (in 24-hour format) using the LCD, and then press [OK].

   (For example: enter 19:45 for 7:45 PM.)
7. Press .

Related Information

- General Settings

Set the Time Zone

Set the time zone for your location on the machine.

>> DCP-L3510CDW/DCP-L3551CDW
>> MFC-L3710CW/MFC-L3735CDN/MFC-L3745CDW/MFC-L3750CDW/MFC-L3770CDW

DCP-L3510CDW/DCP-L3551CDW

1. Press **Menu**.
2. Press ▲ or ▼ to select the following:
   a. Select `[Initial Setup]`. Press **OK**.
   b. Select `[Date&Time]`. Press **OK**.
   c. Select `[Time Zone]`. Press **OK**.
3. Press ▲ or ▼ to select the time zone. Press **OK**.
4. Press **Stop/Exit**.

MFC-L3710CW/MFC-L3735CDN/MFC-L3745CDW/MFC-L3750CDW/MFC-L3770CDW

1. Press `[Settings]` > `[All Settings]` > `[Initial Setup]` > `[Date & Time]` > `[Time Zone]`.
2. Enter your time zone.
3. Press `[OK]`.
4. Press .

Related Information

- General Settings

Adjust the LCD Backlight Brightness

Related Models: MFC-L3710CW/MFC-L3735CDN/MFC-L3745CDW/MFC-L3750CDW/MFC-L3770CDW

If you are having difficulty reading the LCD, changing the brightness setting may help.

1. Press [Settings] > [All Settings] > [General Setup] > [LCD Settings] > [Backlight].
2. Press the [Light], [Med] or [Dark] option.
3. Press .

Related Information

- General Settings

Change How Long the LCD Backlight Stays On

Related Models: MFC-L3710CW/MFC-L3735CDN/MFC-L3745CDW/MFC-L3750CDW/MFC-L3770CDW

Set how long the LCD backlight stays on.

1. Press [Settings] > [All Settings] > [General Setup] > [LCD Settings] > [Dim Timer].
2. Press the option you want:
   - [10Secs]
   - [30Secs]
   - [1Min]
   - [2Mins]
   - [3Mins]
   - [5Mins]
3. Press .

Related Information

- General Settings

Set Your Station ID

Related Models: MFC-L3710CW/MFC-L3735CDN/MFC-L3745CDW/MFC-L3750CDW/MFC-L3770CDW

Set the machine to print your Station ID and the fax's date and time at the top of each fax you send.

1. Press [Settings] > [All Settings] > [Initial Setup] > [Station ID] > [Fax].
2. Enter your fax number (up to 20 digits) using the LCD, and then press [OK].
3. Press [Tel].
4. Enter your telephone number (up to 20 digits) using the LCD, and then press [OK].
5. Press [Name].
6. Enter your name (up to 20 characters) using the LCD, and then press [OK].

- Press A 1 @ to cycle between letters, numbers and special characters. (The characters available may differ depending on your country.)
- If you enter an incorrect character, press ◀ or ▶ to move the cursor to it and press ⌫. Press the correct character.
- To enter a space, press [Space] or ▶.
- For more detailed information, see *Related Information*.

7. Press ⌂.

Related Information

- General Settings

Related Topics:

- How to Enter Text on Your Brother Machine
- Transfer Faxes to Another Fax Machine
- Transfer the Fax Journal Report to Another Fax Machine

Set Tone or Pulse Dialling Mode

Related Models: MFC-L3710CW/MFC-L3735CDN/MFC-L3745CDW/MFC-L3750CDW/MFC-L3770CDW

Your Brother machine is set for a Tone dialling service. If you have a Pulse dialling (rotary) service, you must change the dialling mode.

This feature is not available in some countries.

1. Press [Settings] > [All Settings] > [Initial Setup] > [Tone/Pulse].
2. Press [Tone] or [Pulse].
3. Press .

Related Information

- General Settings

Reduce Toner Consumption

Using the Toner Save feature may reduce toner consumption. When Toner Save is set to on, the print on your documents appears lighter.

We DO NOT recommend using the Toner Save feature for printing photo or greyscale images.

>> DCP-L3510CDW/DCP-L3551CDW
>> MFC-L3710CW/MFC-L3735CDN/MFC-L3745CDW/MFC-L3750CDW/MFC-L3770CDW

DCP-L3510CDW/DCP-L3551CDW

1. Press **Menu**.
2. Press ▲ or ▼ to display the `[General Setup]` option, and then press **OK**.
3. Press ▲ or ▼ to display the `[Ecology]` option, and then press **OK**.
4. Press ▲ or ▼ to display the `[Toner Save]` option, and then press **OK**.
5. Press ▲ or ▼ to display the `[On]` or `[Off]` option, and then press **OK**.
6. Press **Stop/Exit**.

MFC-L3710CW/MFC-L3735CDN/MFC-L3745CDW/MFC-L3750CDW/MFC-L3770CDW

1. Press `[Settings]` > `[All Settings]` > `[General Setup]` > `[Ecology]` > `[Toner Save]`.
2. Press `[On]` or `[Off]`.
3. Press .

Related Information

- General Settings

Related Topics:

- Improve the Print Quality

Add a Prefix to Every Fax Number

Related Models: MFC-L3710CW/MFC-L3735CDN/MFC-L3745CDW/MFC-L3750CDW/MFC-L3770CDW

The Dial Prefix setting will automatically dial a predefined number before every fax number you dial. For example: If your telephone system requires a 9 to dial an outside number, use this setting to automatically dial 9 for every fax you send.

- Use the numbers and symbols from 0 to 9, #, and *. (You cannot use ! with any other numbers or symbols.)
- If your telephone system requires a time break recall (hookflash), press ! on the LCD.

1. Press [Settings] > [All Settings] > [Initial Setup] > [Dial Prefix].
2. Press [On] or [Off].

Option	Description
On	To activate the prefix number setting, select On. If you selected On, go to the next step to set a prefix number.
Off	To deactivate the prefix number setting, select Off. If you selected Off, press to exit.

3. Press [Dial Prefix].
4. Enter a prefix number (up to five digits) using the LCD, and then press [OK].

To change the prefix number, press ◀ or ▶ to position the cursor under the digit to be deleted and press . Then press the correct digit.

Repeat until the prefix number is correct, and then press [OK].

5. Press .

Related Information

- General Settings

Prevent Dialling a Wrong Number (Dial Restriction)

Related Models: MFC-L3710CW/MFC-L3735CDN/MFC-L3745CDW/MFC-L3750CDW/MFC-L3770CDW

This feature prevents users from sending a fax or call to the wrong number by mistake. You can set the machine to restrict dialling when you use the dial pad, Address Book and Shortcuts.

1. Press [Settings] > [All Settings] > [Fax] > [Dial Restriction].
2. Press one of the following options:
   - [Dial Pad]
   - [Address Book]

   If you combine Address Book numbers when dialling, the numbers will be recognised as dial pad input and will not be restricted.

   - [Shortcuts]
3. Press one of the following options:

Option	Description
Enter # Twice	The machine prompts you to re-enter the number, and then if you re-enter the same number correctly, the machine will start dialling. If you re-enter the wrong number, the LCD will display an error message.
On	The machine restricts all fax sending and outbound calls for that dialling method.
Off	The machine does not restrict the dialling method.

   - The [Enter # Twice] setting will not work if you use an external phone or press [Hook] before entering the number. You will not be asked to re-enter the number.
   - If you choose [On] or [Enter # Twice], you cannot use the Broadcasting feature.

4. Press .

Related Information

- General Settings

Reduce Printing Noise

The Quiet Mode setting can reduce printing noise. When Quiet Mode is turned on, the print speed becomes slower. The factory setting is off.

>> DCP-L3510CDW/DCP-L3551CDW
>> MFC-L3710CW/MFC-L3735CDN/MFC-L3745CDW/MFC-L3750CDW/MFC-L3770CDW

DCP-L3510CDW/DCP-L3551CDW

1. Press **Menu**.
2. Press ▲ or ▼ to display the [General Setup] option, and then press **OK**.
3. Press ▲ or ▼ to display the [Ecology] option, and then press **OK**.
4. Press ▲ or ▼ to display the [Quiet Mode] option, and then press **OK**.
5. Press ▲ or ▼ to display the [On] or [Off] option, and then press **OK**.
6. Press **Stop/Exit**.

MFC-L3710CW/MFC-L3735CDN/MFC-L3745CDW/MFC-L3750CDW/MFC-L3770CDW

1. Press [Settings] > [All Settings] > [General Setup] > [Ecology] > [Quiet Mode].
2. Press [On] or [Off].
3. Press .

Related Information

- General Settings

Change the Language on the LCD

Change the LCD language if needed.

This feature is not available in some countries.

>> DCP-L3510CDW/DCP-L3551CDW
>> MFC-L3710CW/MFC-L3735CDN/MFC-L3745CDW/MFC-L3750CDW/MFC-L3770CDW

DCP-L3510CDW/DCP-L3551CDW

1. Press **Menu**.
2. Press ▲ or ▼ to display the `[Initial Setup]` option, and then press **OK**.
3. Press ▲ or ▼ to display the `[Local Language]` option, and then press **OK**.
4. Press ▲ or ▼ to display your language, and then press **OK**.
5. Press **Stop/Exit**.

MFC-L3710CW/MFC-L3735CDN/MFC-L3745CDW/MFC-L3750CDW/MFC-L3770CDW

1. Press `[Settings]` > `[All Settings]` > `[Initial Setup]` > `[Local Language]`.
2. Press your language.
3. Press .

Related Information

- General Settings

Save Your Favourite Settings as a Shortcut

Related Models: MFC-L3710CW/MFC-L3735CDN/MFC-L3745CDW/MFC-L3750CDW/MFC-L3770CDW

- Add Shortcuts
- Change or Delete Shortcuts

Add Shortcuts

Related Models: MFC-L3710CW/MFC-L3735CDN/MFC-L3745CDW/MFC-L3750CDW/MFC-L3770CDW

You can add the Fax, Copy, Scan, Web Connect and Apps settings you use most frequently by saving them as your Shortcuts. Later you can press the Shortcut to apply these settings instead of manually re-entering them.

Some Shortcut menus are not available depending on your model.

These instructions describe how to add a Copy Shortcut. The steps for adding a Fax, Scan, Web Connect or Apps Shortcut are very similar.

1. Press + [Shortcuts]. (If + [Shortcuts] is displayed.)
2. Press a tab.
3. Press + where you have not added a Shortcut.
4. Press [Copy].
5. Press > to access the preset copy settings.
6. Swipe to display the copy presets, and then press the copy preset you want.
7. Press [Options].
8. Swipe up or down or press ▲ or ▼ to display the available settings, and then press the setting you want to change.
9. Swipe up or down or press ▲ or ▼ to display the available options for the setting, and then press the option you want.

   Repeat these two steps until you have selected all the settings and options you want.
10. When you have finished changing settings, press [OK]. (If the [OK] button is displayed.)
11. Press [Save as Shortcut].
12. Read and confirm the displayed list of settings you have selected, and then press [OK].
13. Enter a name for the Shortcut using the LCD, and then press [OK].

Related Information

- Save Your Favourite Settings as a Shortcut

Change or Delete Shortcuts

Related Models: MFC-L3710CW/MFC-L3735CDN/MFC-L3745CDW/MFC-L3750CDW/MFC-L3770CDW

You cannot change a Web Connect Shortcut or Apps Shortcut. If you need to change them, delete them, and then add a new Shortcut.

1. Press [+] [Shortcuts]. (If [+] [Shortcuts] is displayed.)
2. Press a tab to display the Shortcut you want to change.
3. Press the Shortcut you want to change.

   The settings for the Shortcut you selected appear.

To delete the Shortcut or edit the name, press and hold the Shortcut until the options appear, and then follow the on-screen menus.

4. Press [Options].
5. Change the settings for the Shortcut if needed.
6. Press [OK] (if needed).
7. When finished, press [Save as Shortcut].
8. Read and confirm the displayed list of settings you have selected, and then press [OK].
9. Do one of the following:
   - To overwrite the Shortcut, press [Yes].
   - If you do not want to overwrite the Shortcut, press [No] to enter a new Shortcut name.

     Enter a new name using the LCD, and then press [OK].

To edit the name, hold down [⌫] to delete the current name.

Related Information

- Save Your Favourite Settings as a Shortcut

Print Reports

- Reports
- Print a Report

Reports

The following reports are available:

Transmission (MFC models)

The Transmission report prints a Transmission Verification Report of your last transmission.

Address Book (MFC models)

The Address Book report prints an alphabetical list of names and numbers stored in the Address Book memory.

Fax Journal (MFC models)

The Fax Journal prints a list of information about your last 200 incoming and outgoing faxes. (TX means Transmit, RX means Receive.)

User Settings

The User Settings report prints a list of your current settings.

Printer Settings

The Printer Settings report prints a list of your current printer settings.

Network Configuration (Models with network functionality)

The Network Configuration report prints a list of your current network settings.

Print File List

The Print File List prints a list of the fonts and print macros stored in the machine.

Drum Dot Print

The Drum Dot Print prints the drum dot sheet, which helps when it is time to clean the drum unit.

WLAN Report (Models with wireless network functionality)

The WLAN Report prints the wireless LAN connectivity diagnosis.

Caller ID history (MFC models)

The Caller ID history report prints a list of the available Caller ID information for the last 30 received faxes and telephone calls.

2-Line LCD models

To print the Caller ID list, use the Print Report option in the caller ID setting menu.

Related Information

- Print Reports

Print a Report

>> DCP-L3510CDW/DCP-L3551CDW
>> MFC-L3710CW/MFC-L3735CDN/MFC-L3745CDW/MFC-L3750CDW/MFC-L3770CDW

DCP-L3510CDW/DCP-L3551CDW

1. Press **Menu**.
2. Press ▲ or ▼ to display the `[Print Reports]` option, and then press **OK**.
3. Press ▲ or ▼ to display the report you want to print, and then press **OK**.
4. Press **Mono Start** or **Colour Start**.
5. Press **Stop/Exit**.

MFC-L3710CW/MFC-L3735CDN/MFC-L3745CDW/MFC-L3750CDW/MFC-L3770CDW

1. Press `[Settings]` > `[All Settings]` > `[Print Reports]`.
2. Swipe up or down or press ▲ or ▼ to display the report you want to print, and then press it.
3. Do one of the following:
   - If you choose `[XMIT Verify]`, do one of the following:
     - To view the Transmission Verification Report, press `[View on LCD]`.
     - To print the Transmission Verification Report, press `[Print Report]`.
   - If you choose other reports, go to next step.
4. Press `[Yes]`.
5. Press .

Related Information

- Print Reports

Settings and Features Tables

The Settings tables will help you understand the menu selections and options that are found in the machine's programs.

- Settings Tables (DCP-L3510CDW/DCP-L3551CDW)
- Settings Tables (MFC-L3710CW/MFC-L3735CDN/MFC-L3745CDW/MFC-L3750CDW/MFC-L3770CDW)
- Feature Tables (MFC-L3710CW/MFC-L3735CDN/MFC-L3745CDW/MFC-L3750CDW/MFC-L3770CDW)

Settings Tables (DCP-L3510CDW/DCP-L3551CDW)

Related Models: DCP-L3510CDW/DCP-L3551CDW

[General Setup]

Level 1	Level 2	Descriptions
Tray Setting	Paper Type	Set the type of paper in the paper tray.
	Paper Size	Set the size of paper in the paper tray.
	Check Size	Select whether to display a message telling you to check that the size and type of the paper in the machine and the machine's Paper Size and Paper Type settings match.
Beep	-	Adjust the beeper volume.
Ecology	Eco Mode	Turn the following machine settings on at the same time. • 2-sided Print: Long Edge(Available only for certain models) • Sleep Time: 0Min
	Toner Save	Increase the page yield of the toner cartridge.
	Sleep Time	Set the number of minutes before the machine enters Sleep mode.
	Quiet Mode	Decrease printing noise.
	Auto Power Off	Set the number of hours that the machine will remain in Deep Sleep mode before going into Power Off mode.
LCD Contrast	-	Adjust the LCD contrast.
Setting Lock	-	Restrict unauthorised users from changing the machine’s settings.
Delete Storage	Macro ID	Delete the registered Macro data.
	Font ID	Delete the registered Font data.
	Format	Restore the Macro and Font data of your machine to the default settings.

[Copy]

Level 1	Level 2	Descriptions
Density	-	Adjust the density.
Quality	-	Choose the Copy resolution for your type of document.
Contrast	-	Adjust the contrast for copies.
Colour Adjust	Red	Adjust the red colour.
	Green	Adjust the green colour.
	Blue	Adjust the blue colour.
ID Copy	Density	Adjust the density.
	Quality	Choose the Copy resolution for your type of document.
	Contrast	Adjust the contrast for copies.
	2in1/1in1	Make 2 in 1 ID copies.

[Printer]

Level 1	Level 2	Level 3	Descriptions
Emulation	-	-	Set the printer emulation mode.

Level 1	Level 2	Level 3	Descriptions
Quality	-	-	Select the print quality.
Print Options	Font List	HP LaserJet	Print a list of the machine's internal fonts.
		BR-Script 3	
	Test Print	-	Print a test page.
2-sided	2-sided Print	-	Turn 2-sided printing off or on and select flip on long edge or short edge.
	Single Image	-	For a print job where the last page is a 1-sided image, select the 1-sided Feed option to reduce printing time.
Auto Continue	-	-	Select this setting if you want the machine to clear paper size errors, and to use the paper in the tray.
Output Colour	-	-	Set the output colour.
Tray Command	-	-	Select this setting if a tray mismatch appears when you use the HP drivers.
Reset Printer	-	-	Restore the printer settings to the factory settings.
Clr Correction	Calibration	Calibrate	Initiate colour calibration to check and correct colours.
		Reset	Reset the calibration parameters to the default settings.
	Registration	-	Align the print position of each colour.
	Auto Correct	-	Set the machine to perform Colour Calibration and Registration automatically.
	ColourSettings	Setting Mode	Select whether to apply the colour print settings of the machine or the printer driver.
		Colour Mode	Select the colour mode.
		Improve Gray	Turn on or off to improve the image quality of shaded areas.
		Enhance Black	Turn on or off if a black graphic does not print correctly.
		Brightness	Adjust the brightness.
		Contrast	Adjust the contrast.
		Red	Adjust the red colour.
		Green	Adjust the green colour.
		Blue	Adjust the blue colour.

[Network]

For wired and wireless network models

Level 1	Level 2	Level 3	Level 4	Descriptions
Wired LAN	TCP/IP	Boot Method	-	Select the Boot method that best suits your needs.
		IP Address	-	Enter the IP address.
		Subnet Mask	-	Enter the Subnet mask.
		Gateway	-	Enter the Gateway address.
		Node Name	-	Enter the Node name. (Up to 32 characters)
		WINS Config	-	Select the WINS configuration mode.
		WINS Server	Primary	Specify the IP address of the primary WINS server.

Level 1	Level 2	Level 3	Level 4	Descriptions
Wired LAN	TCP/IP	WINS Server	Secondary	Specify the IP address of the secondary WINS server.
		DNS Server	Primary	Specify the IP address of the primary DNS server.
			Secondary	Specify the IP address of the secondary DNS server.
		APIPA	-	Set the machine to allocate the IP address from the link-local address range automatically.
		IPv6	-	Turn the IPv6 protocol on or off.
	Ethernet	-	-	Select the Ethernet link mode.
	Wired Status	-	-	View the current wired status.
	MAC Address	-	-	View the machine's MAC address.
	Set to Default	-	-	Restore the wired network settings to the factory settings.
	Wired Enable	-	-	Turn the Wired LAN interface on or off manually.
WLAN	TCP/IP	Boot Method	-	Select the Boot method that best suits your needs.
		IP Address	-	Enter the IP address.
		Subnet Mask	-	Enter the Subnet mask.
		Gateway	-	Enter the Gateway address.
		Node Name	-	Enter the Node name. (Up to 32 characters)
		WINS Config	-	Select the WINS configuration mode.
		WINS Server	Primary	Specify the IP address of the primary WINS server.
			Secondary	Specify the IP address of the secondary WINS server.
		DNS Server	Primary	Specify the IP address of the primary DNS server.
			Secondary	Specify the IP address of the secondary DNS server.
		APIPA	-	Set the machine to allocate the IP address from the link-local address range automatically.
		IPv6	-	Turn the IPv6 protocol on or off.
	Setup Wizard	-	-	Configure your wireless network settings manually.
	WLAN Assistant	-	-	Configure your wireless network settings using the Brother installation disc.
	WPS	-	-	Configure your wireless network settings using the one-button push method.
	WPS w/PIN Code	-	-	Configure your wireless network settings using WPS with a PIN.
	WLAN Status	Status	-	View the current wireless network status.
		Signal	-	View the current wireless network signal strength.
		Channel	-	View the current wireless network channel.
		Speed	-	View the current wireless network speed.

Level 1	Level 2	Level 3	Level 4	Descriptions
WLAN	WLAN Status	SSID	-	View the current SSID.
		Comm. Mode	-	View the current Communication mode.
	MAC Address	-	-	View the machine's MAC address.
	Set to Default	-	-	Restore the wireless network settings to the factory settings.
	WLAN Enable	-	-	Turn the WLAN on or off manually.
Wi-Fi Direct	Push Button	-	-	Configure your Wi-Fi Direct network settings using the one-button push method.
	PIN Code	-	-	Configure your Wi-Fi Direct network settings using WPS with a PIN code.
	Manual	-	-	Configure your Wi-Fi Direct network settings manually.
	Group Owner	-	-	Set your machine as the Group Owner.
	Device Info.	Device Name	-	View your machine's device name.
		SSID	-	View the Group Owner's SSID. When the machine is not connected, the LCD displays Not Connected.
		IP Address	-	View your machine's current IP Address.
	Status Info.	Status	-	View the current Wi-Fi Direct network status.
		Signal	-	View the current Wi-Fi Direct network signal strength. When your machine acts as Group Owner, the LCD always indicates a strong signal.
		Channel	-	View the current Wi-Fi Direct network channel.
		Speed	-	View the current Wi-Fi Direct network speed.
	I/F Enable	-	-	Turn the Wi-Fi Direct connection on or off.
Network Reset	-	-	-	Restore all network settings back to the factory settings.

For wireless network models

Level 1	Level 2	Level 3	Level 4	Descriptions
WLAN	TCP/IP	Boot Method	-	Select the Boot method that best suits your needs.
		IP Address	-	Enter the IP address.
		Subnet Mask	-	Enter the Subnet mask.
		Gateway	-	Enter the Gateway address.
		Node Name	-	Enter the Node name. (Up to 32 characters)
		WINS Config	-	Select the WINS configuration mode.
		WINS Server	Primary	Specify the IP address of the primary WINS server.
			Secondary	Specify the IP address of the secondary WINS server.
		DNS Server	Primary	Specify the IP address of the primary DNS server.
			Secondary	Specify the IP address of the secondary DNS server.

Level 1	Level 2	Level 3	Level 4	Descriptions
WLAN	TCP/IP	APIPA	-	Set the machine to allocate the IP address from the link-local address range automatically.
		IPv6	-	Turn the IPv6 protocol on or off.
	Setup Wizard	-	-	Configure your wireless network settings manually.
	WLAN Assistant	-	-	Configure your wireless network settings using the Brother installation disc.
	WPS	-	-	Configure your wireless network settings using the one-button push method.
	WPS w/PIN Code	-	-	Configure your wireless network settings using WPS with a PIN.
	WLAN Status	Status	-	View the current wireless network status.
		Signal	-	View the current wireless network signal strength.
		Channel	-	View the current wireless network channel.
		Speed	-	View the current wireless network speed.
		SSID	-	View the current SSID.
		Comm. Mode	-	View the current Communication mode.
	MAC Address	-	-	View the machine's MAC address.
	WLAN Enable	-	-	Turn the WLAN on or off manually.
Wi-Fi Direct	Push Button	-	-	Configure your Wi-Fi Direct network settings using the one-button push method.
	PIN Code	-	-	Configure your Wi-Fi Direct network settings using WPS with a PIN code.
	Manual	-	-	Configure your Wi-Fi Direct network settings manually.
	Group Owner	-	-	Set your machine as the Group Owner.
	Device Info.	Device Name	-	View your machine's device name.
		SSID	-	View the Group Owner's SSID. When the machine is not connected, the LCD displays Not Connected.
		IP Address	-	View your machine's current IP Address.
	Status Info.	Status	-	View the current Wi-Fi Direct network status.
		Signal	-	View the current Wi-Fi Direct network signal strength. When your machine acts as Group Owner, the LCD always indicates a strong signal.
		Channel	-	View the current Wi-Fi Direct network channel.
		Speed	-	View the current Wi-Fi Direct network speed.
	I/F Enable	-	-	Turn the Wi-Fi Direct connection on or off.
Network Reset	-	-	-	Restore all network settings back to the factory settings.

[Print Reports]

Level 1	Descriptions
User Settings	Print a list of your settings.
Print Settings	Print a list of your Printer settings.

Level 1	Descriptions
Network Config	Print a list of your Network settings.
PrintFileList	Print a list of data saved in the machine's memory.
Drum Dot Print	Print the Drum Dot Check Sheet.
WLAN Report	Print the wireless LAN connection results.

[Machine Info.]

Level 1	Level 2	Descriptions
Serial No.	-	Display the machine's serial number.
Version	Main Version	Display the main firmware version.
	Sub1 Version	Display the sub firmware version.
Page Counter	Total	Check the total number of pages the machine has printed during its life.
	Copy	
	Print	
	Other	
Parts Life	Toner	View the approximate remaining toner life for each colour.
	Drum	Display the remaining life of each drum unit.
	Belt	Display the remaining life of the belt unit.
	Fuser	Display the remaining life of the fuser unit.
	PF Kit 1	Display the remaining life of the PF Kit 1.

[Secure Print]

Level 1	Level 2	Descriptions
(Select User)	(Select Secure Print Job)	You can print data saved in the machine's memory when you enter your four-digit password. Active only when the machine has secure print data.

[Initial Setup]

Level 1	Level 2	Descriptions
Date&Time	Date&Time	Access the Date and Time setting menus.
	Auto Daylight (Available only for some countries)	Set the machine to change automatically for Daylight Saving Time.
	Time Zone	Set your time zone.
Reset	Machine Reset	Restore all the machine settings that you have changed.
	Network Reset (For models with network functionality)	Restore all network settings back to the factory settings.
	All Settings	Restore all the machine's settings back to the factory settings.
	Factory Reset	Restores all the machine's settings to the factory defaults. Perform this operation when you dispose of your machine.
Local Language (Available only for certain models)	-	Change your LCD language.

Related Information

- Settings and Features Tables

Settings Tables (MFC-L3710CW/MFC-L3735CDN/MFC-L3745CDW/MFC-L3750CDW/MFC-L3770CDW)

Related Models: MFC-L3710CW/MFC-L3735CDN/MFC-L3745CDW/MFC-L3750CDW/MFC-L3770CDW

[Settings]

Level 1	Level 2	Level 3	Descriptions
	Date & Time	-	Access the Date and Time setting menus.
Toner	Toner Life	-	View the approximate remaining toner life for each colour.
	Test Print	-	Print a test page.
	Calibration	Calibrate	Initiate colour calibration to check and correct colours.
		Reset	Reset the calibration parameters to the default settings.
	Registration	-	Align the print position of each colour.
Network	Wired LAN (MFC-L3735CDN/ MFC-L3745CDW/ MFC-L3750CDW/ MFC-L3770CDW)	-	Access the Wired LAN setting menus.
	WLAN (MFC-L3710CW/ MFC-L3745CDW/ MFC-L3750CDW/ MFC-L3770CDW)	-	Access the WLAN setting menus.
Screen Settings	-	-	Access the default screen setting menus.
Eco Mode	-	-	Turn the following machine settings on at the same time. • 2-sided Print: Long Edge (Available only for certain models) • Sleep Time: 0Min • Dim Timer: 10Secs
Tray Setting	-	-	Access the tray setting menus.
All Settings	-	-	Configure the detailed settings.

[All Settings] > [General Setup]

Level 3	Level 4	Level 5	Descriptions
Tray Setting	Paper Type	MP Tray (MFC-L3770CDW)	Select the paper type that matches the paper in the MP tray.
		Tray #1 (MFC-L3770CDW)	Select the paper type that matches the paper in the standard paper tray.
	Paper Size	MP Tray (MFC-L3770CDW)	Select the size of paper you loaded in the MP tray.

Level 3	Level 4	Level 5	Descriptions
Tray Setting	Paper Size	Tray #1 (MFC-L3770CDW)	Select the size of paper you loaded in the standard paper tray.
	Check Size	-	Select whether to display a message telling you to check that the size and type of the paper in the machine and the machine's Paper Size and Paper Type settings match.
	Tray Use: Copy	-	Select the tray to be used for Copy.
	Tray Use: Fax	-	Select the tray to be used for Fax.
	Tray Use: Print	-	Select the tray to be used for Print.
Volume	Ring	-	Adjust the ring volume.
	Beep	-	Adjust the beeper volume.
	Speaker	-	Adjust the speaker volume.
LCD Settings	Backlight	-	Adjust the brightness of the LCD backlight.
	Dim Timer	-	Set how long the LCD backlight stays on after you go back to your Main Home screen.
Screen Settings	Main Home Screen	-	Set the Main Home screen.
	Copy Screen	-	Set the default Copy screen.
	Scan Screen	-	Set the default Scan screen.
Notifications	Scan Result(Skip Blank Page)	-	Displays the total scanned pages and skipped blank pages after scanning is completed.
Ecology	Eco Mode	-	Turn the following machine settings on at the same time. • 2-sided Print: Long Edge (Available only for certain models) • Sleep Time: 0Min • Dim Timer: 10Secs
	Toner Save	-	Increase the page yield of the toner cartridge.
	Sleep Time	-	Set how much time will pass before the machine enters Power Saving mode.
	Quiet Mode	-	Decrease printing noise.
	Auto Power Off	-	Set the number of hours that the machine will remain in Deep Sleep mode before going into Power Off mode.
Setting Lock	Set Password	-	Restrict unauthorised users from changing the machine’s settings.
	Lock Off⇒On	-	
	New Password (Available only when you enter the password for the first time.)	-	
Delete Storage	Macro ID	-	Delete the registered Macro data.
	Font ID	-	Delete the registered Font data.
	Format	-	Restore the Macro and Font data of your machine to the default settings.

[All Settings] > [Shortcut Settings]

Level 3	Level 4	Descriptions
(Select a Shortcut)	Rename	Change the shortcut name.
	Edit	Change the shortcut settings.
	Delete	Delete the shortcut.

[All Settings] > [Fax]

Level 3	Level 4	Level 5	Descriptions
Setup Receive	Receive Mode	-	Select the Receive Mode that best suits your needs.
	Ring Delay	-	Set the number of rings before the machine answers in Fax or Fax/Tel mode.
	F/T Ring Time	-	Set the length of the pseudo/double-ring time in Fax/Tel mode.
	Fax Preview	-	View received faxes on the LCD.
	Fax Detect	-	Receive fax messages automatically when you answer a call and hear fax tones.
	Remote Codes	Remote Codes	Answer calls at an extension or external telephone and use codes to turn the Remote Codes on or off. You can personalise the codes.
		Act.Code	
		Deact.Code	
	Auto Reduction	-	Reduce the size of incoming faxes.
	PC Fax Receive	On	Set the machine to send faxes to your computer. You can turn on the Backup Print safety feature.
		Off	
	Memory Receive	Off	-
		Fax Forward	Set the machine to forward fax messages or to store incoming faxes in the memory (so you can retrieve them while you are away from your machine). If you select Fax Forward or Fax Storage, you can turn on the Backup Print safety feature.
		Fax Storage	
		Forward to Cloud	Forward incoming faxes to the online service.
	Fax Rx Stamp	-	Print the received time and date on the top of received faxes.
	2-sided	-	Print received faxes on both sides of the paper.
Setup Send	Batch TX	-	Combine delayed faxes to the same fax number at the same time of day into one transmission.
	Coverpage Note	-	Set up one or two custom cover page messages to print on outgoing faxes.
	Auto Redial	-	Set the machine to redial the last fax number after five minutes, if the fax did not go through because the line was busy.
	Destination	-	Set the machine to display the destination information on the LCD during fax dialling.
Report Setting	XMIT Report	-	Select the initial setup for the Transmission Verification Report.
	Journal Period	Journal Period	Set the interval for automatic printing of the Fax Journal.
		Time	If you select an option other than Off and Every 50 Faxes, you can set the time for the option.

Level 3	Level 4	Level 5	Descriptions
Report Setting	Journal Period	Day	If you select Every 7 Days, you can set the day of the week.
Print Document	-	-	Print received faxes stored in the machine's memory.
Remote Access	-	-	Set your own code for Remote Retrieval.
Dial Restriction	Dial Pad	-	Set the machine to restrict dialling when using the dial pad.
	Address Book	-	Set the machine to restrict the dialling when using the Address Book.
	Shortcuts	-	Set the machine to restrict the dialling when using a Shortcut.
Remaining Jobs	-	-	Check which scheduled jobs are in the machine's memory and cancel selected jobs.

[All Settings] > [Printer]

Level 3	Level 4	Level 5	Descriptions
Emulation	-	-	Select the emulation mode.
Quality	-	-	Select the print quality.
Print Options	Font List	HP LaserJet	Print a list of the machine's internal fonts.
		BR-Script 3	
	Test Print	-	Print a test page.
2-sided	2-sided Print	-	Enable or disable 2-sided printing and choose long edge or short edge.
	Single Image	-	For a print job where the last page is a 1-sided image, select the 1-sided Feed option to reduce printing time. When you use preprinted paper, you must select the 2-sided Feed option. If you select 1-sided Feed for preprinted paper, the last page will be printed on the reverse side.
Auto Continue	-	-	Select if you want the machine to clear paper size errors or media type errors automatically, and use paper from other trays.
Output Colour	-	-	Set the output colour.
HP Tray Command	-	-	Select the correct version of HP LaserJet tray emulation.
Reset Printer	-	-	Restore the printer settings to the factory settings.
Colour Correction	Calibration	Calibrate	Initiate colour calibration to check and correct colours.
		Reset	Reset the calibration parameters to the default settings.
	Registration	-	Align the print position of each colour.
	Auto Correction	-	Set the machine to perform Colour Calibration and Registration automatically.
	Colour Settings	Setting Mode	Select whether to apply the colour print settings of the machine or the printer driver.
		Colour Mode	Select the colour mode.
		Improve Grey Colour	Turn on or off to improve the image quality of shaded areas.

Level 3	Level 4	Level 5	Descriptions
Colour Correction	Colour Settings	Enhance Black Printing	Turn on or off if a black graphic does not print correctly.
		Brightness	Adjust the brightness.
		Contrast	Adjust the contrast.
		Red	Adjust the red colour.
		Green	Adjust the green colour.
		Blue	Adjust the blue colour.

[All Settings] > [Network]

Level 3	Level 4	Level 5	Level 6	Descriptions
Wired LAN (MFC-L3735CDN/ MFC-L3745CDW/ MFC-L3750CDW/ MFC-L3770CDW)	TCP/IP	BOOT Method	IP Boot Tries	Select the Boot method that best suits your needs.
		IP Address	-	Enter the IP address.
		Subnet Mask	-	Enter the Subnet mask.
		Gateway	-	Enter the Gateway address.
		Node Name	-	Enter the Node name. (up to 32 characters)
		WINS Configuration	-	Select the WINS configuration mode.
		WINS Server	Primary	Specify the IP address of the primary WINS server.
			Secondary	Specify the IP address of the secondary WINS server.
		DNS Server	Primary	Specify the IP address of the primary DNS server.
			Secondary	Specify the IP address of the secondary DNS server.
		APIPA	-	Set the machine to allocate the IP address from the link-local address range automatically.
		IPv6	-	Turn the IPv6 protocol on or off.
	Ethernet	-	-	Select the Ethernet link mode.
	Wired Status	-	-	View the current wired status.
	MAC Address	-	-	View the machine's MAC address.
	Set to Default (MFC-L3745CDW/ MFC-L3750CDW/ MFC-L3770CDW)	-	-	Restore the wired network settings to the factory settings.
	Wired Enable (MFC-L3745CDW/ MFC-L3750CDW/ MFC-L3770CDW)	-	-	Turn the Wired LAN interface on or off manually.
WLAN	TCP/IP	BOOT Method	IP Boot Tries	Select the Boot method that best suits your needs.

Level 3	Level 4	Level 5	Level 6	Descriptions
(MFC-L3710CW/ MFC-L3745CDW/ MFC-L3750CDW/ MFC-L3770CDW)	TCP/IP	IP Address	-	Enter the IP address.
		Subnet Mask	-	Enter the Subnet mask.
		Gateway	-	Enter the Gateway address.
		Node Name	-	Enter the Node name. (up to 32 characters)
		WINS Configuration	-	Select the WINS configuration mode.
		WINS Server	Primary	Specify the IP address of the primary WINS server.
			Secondary	Specify the IP address of the secondary WINS server.
		DNS Server	Primary	Specify the IP address of the primary DNS server.
			Secondary	Specify the IP address of the secondary DNS server.
		APIPA	-	Set the machine to allocate the IP address from the link-local address range automatically.
		IPv6	-	Turn the IPv6 protocol on or off.
	Setup Wizard	-	-	Configure the wireless network settings using the setup wizard.
	WLAN Assistant	-	-	Configure your wireless network settings using the Brother installation disc.
	WPS	-	-	Configure your wireless network settings using the one-button push method.
	WPS w/ PIN Code	-	-	Configure your wireless network settings using WPS with a PIN.
	WLAN Status	Status	-	View the current wireless network status.
		Signal	-	View the current wireless network signal strength.
		SSID	-	View the current SSID.
		Comm. Mode	-	View the current Communication mode.
	MAC Address	-	-	View the machine's MAC address.
	Set to Default (MFC-L3745CDW/ MFC-L3750CDW/ MFC-L3770CDW)	-	-	Restore the wireless network settings to the factory settings.
	WLAN Enable	-	-	Turns the wireless interface on or off.
Wi-Fi Direct (MFC-L3710CW/ MFC-L3745CDW/	Push Button	-	-	Configure your Wi-Fi Direct network settings using the one-button push method.

Level 3	Level 4	Level 5	Level 6	Descriptions
MFC-L3750CDW/ MFC-L3770CDW)	PIN Code	-	-	Configure your Wi-Fi Direct network settings using WPS with a PIN code.
	Manual	-	-	Configure your Wi-Fi Direct network settings manually.
	Group Owner	-	-	Set your machine as the Group Owner.
	Device Information	Device Name	-	View your machine's device name.
		SSID	-	View the Group Owner's SSID. When the machine is not connected, the LCD displays Not Connected.
		IP Address	-	View your machine's current IP Address.
	Status Information	Status	-	View the current Wi-Fi Direct network status.
		Signal	-	View the current Wi-Fi Direct network signal strength. When your machine acts as Group Owner, the LCD always indicates a strong signal.
	I/F Enable	-	-	Turn the Wi-Fi Direct connection on or off.
NFC (Available only for certain models)	-	-	-	Turn the NFC function on or off.
Web Connect Settings	Proxy Settings	Proxy Connection	-	Change the Web connection settings.
		Address	-	
		Port	-	
		User Name	-	
		Password	-	
Network Reset	-	-	-	Restore all network settings back to the factory settings.

[All Settings] > [Print Reports]

Level 3	Level 4	Descriptions
XMIT Verify	View on LCD	Display Transmission Verification Reports about sent faxes.
	Print Report	Print a Transmission Verification Report of your last transmission.
Address Book	-	Print a list of names and numbers stored in the Address Book.
Fax Journal	-	Print a list of information about your last 200 incoming and outgoing faxes. (TX means Transmit. RX means Receive.)
User Settings	-	Print a list of your settings.
Printer Settings	-	Print a list of your Printer settings.

Level 3	Level 4	Descriptions
Network Configuration	-	Print a list of your Network settings.
Print File List	-	Print a list of data saved in the machine's memory.
Drum Dot Print	-	Print the Drum Dot Check Sheet.
WLAN Report (MFC-L3710CW/ MFC-L3745CDW/ MFC-L3750CDW/ MFC-L3770CDW)	-	Print the wireless LAN connection results.
Caller ID History	-	Print a list of the available Caller ID information about the last 30 received faxes and telephone calls.

[All Settings] > [Machine Info.]

Level 3	Level 4	Level 5	Descriptions
Serial No.	-	-	Check your machine's serial number.
Firmware Version	Main Version	-	Check your machine's firmware version.
	Sub1 Version	-	
Firmware Update	-	-	Update your machine to the latest firmware.
Firmware Auto Check	-	-	View firmware information on the Main Home screen.
Page Counter	Total	Colour	Check the total number of pages the machine has printed.
		Black and White	
	Fax	-	
	Copy	Colour	
		Black and White	
	Print	Colour	
		Black and White	
	Other	Colour	
		Black and White	
Parts Life [1]	Drum	Black(BK)	Display the remaining life of each drum unit.
		Cyan(C)	
		Magenta(M)	
		Yellow(Y)	
	Belt	-	Display the remaining life of the belt unit.
	Fuser	-	Display the remaining life of the fuser unit.
	PF Kit MP (MFC-L3770CDW)	-	Display the remaining life of the PF kit MP.
	PF Kit 1	-	Display the remaining life of the PF Kit 1.

1 The parts life is approximate and may vary by type of use.

[All Settings] > [Initial Setup]

Level 3	Level 4	Descriptions
Date & Time	Date	Add the date and time on the screen and in the headings of the faxes you send.
	Time	
	Clock Type	Select the time format (12-hour or 24-hour).
	Auto Daylight (Available only for some countries)	Set the machine to change automatically for Daylight Saving Time.
	Time Zone	Set your time zone.
Station ID	Fax	Enter your name and fax number so it appears on each page you fax.
	Tel	
	Name	
Tone/Pulse (Available only for some countries)	-	Select the dialling mode.
Dial Tone	-	Shorten the dial tone detect pause.
Dial Prefix	-	Set a prefix number to be added before the fax number every time you dial.
Compatibility	-	Adjust the equalisation for transmission difficulties. VoIP service providers offer fax support using various standards. If you regularly experience fax transmission errors, select Basic (for VoIP).
Reset	Machine Reset	Restore the machine settings that you have changed.
	Network Reset	Restore all network settings back to the factory settings.
	Address Book & Fax	Erase all stored phone numbers and fax settings.
	All Settings	Restore all the machine's settings back to the factory settings and delete the personal data in the memory. You cannot see the data on the machine.
	Factory Reset	Restore all the machine settings back to the factory settings and delete the personal data in the machine's memory. We recommend using this menu option if you want to delete all the data from the machine.
Local Language (Available only for some countries)	-	Change your LCD language.

Related Information

- Settings and Features Tables

Feature Tables (MFC-L3710CW/MFC-L3735CDN/MFC-L3745CDW/MFC-L3750CDW/MFC-L3770CDW)

Related Models: MFC-L3710CW/MFC-L3735CDN/MFC-L3745CDW/MFC-L3750CDW/MFC-L3770CDW

[Toner]

Level 3	Level 4	Descriptions
Toner Life	-	View the approximate remaining toner life for each colour.
Test Print	-	Print a test page.
Calibration	Calibrate	Initiate colour calibration to check and correct colours.
	Reset	Reset the calibration parameters to the default settings.
Registration	-	Align the print position of each colour.

(Wi-Fi®) (MFC-L3710CW/MFC-L3745CDW/MFC-L3750CDW/MFC-L3770CDW)

Level 3	Descriptions
TCP/IP [1]	Change the TCP/IP settings.
Setup Wizard	Configure the wireless network settings using the setup wizard.
WLAN Assistant	Configure your wireless network settings using the Brother installation disc.
WPS	Configure your wireless network settings using the one-button push method.
WPS w/ PIN Code [1]	Configure the wireless network settings using WPS with a PIN code.
WLAN Status [1]	Display the wireless network connection status.
MAC Address [1]	Display the MAC address of the machine.
Set to Default [1]	Restore wireless network settings of your machine to the factory settings.
WLAN Enable [1]	Turn the wireless interface on or off.

[1] Available after a Wi-Fi® connection has been configured.

(Wired LAN) (MFC-L3735CDN)

Level 3	Descriptions
TCP/IP	Change the TCP/IP settings.
Ethernet	Select the Ethernet link mode.
Wired Status	Configure your wireless network settings using the one-button push method.
MAC Address	Display the MAC address of the machine.

[Fax] (When Fax Preview is Off)

Level 3	Level 4	Level 5	Level 6	Descriptions
Redial / Pause	-	-	-	Redial the last number called. When you are entering a fax or telephone number on the control panel, Redial changes to Pause on the LCD. Press Pause when you need a delay while dialling numbers, such as access codes and credit card numbers. You can also store a pause when you set up addresses.
Hook	-	-	-	Press before dialling if you want to listen to make sure a fax machine has answered, and then press Fax Start.
Address Book	(Search)	-	-	Search within the Address Book.
	Edit	Add New Address	Name	Store Address Book numbers, set up Group numbers for Broadcasting, change and delete Address Book numbers.
			Address	
		Setup Groups	Name	
			Add/ Delete	
		Change	(Select Address Book)	
		Delete	(Select Address Book)	
	(Select Address Book)	Apply	-	Start sending a fax using the Address Book.
Call History	Redial	-	-	Redial the last number you dialled.
	Outgoing Call	(Select Outgoing Call)	Apply	Select a number from the Outgoing Call history and then send a fax to it, add it to the Address Book, or delete it.
			Edit	
	Caller ID history	(Select Caller ID History)	Apply	Select a number from the Caller ID History and then send a fax to it, add it to the Address Book, or delete it.
			Edit	
Fax Start	-	-	-	Send a fax.
Options	Fax Resolution	-	-	Set the resolution for outgoing faxes.
	Contrast	-	-	Adjust the contrast.
	2-sided Fax (MFC-L3770CDW)	-	-	Set the 2-sided scanning format.
	Glass Scan Size	-	-	Adjust the scan area of the scanner glass to the size of the document.
	Broadcasting	Add Number	Add Number	Send the same fax message to more than one fax number.
			Add from Address book	
			Search in Address book	
	Delayed Fax	Delayed Fax	-	Set the time of day the delayed faxes will be sent.

Level 3	Level 4	Level 5	Level 6	Descriptions
Options	Delayed Fax	Set Time	-	Set the time of day the delayed faxes will be sent.
	Real Time TX	-	-	Send a fax without using the memory.
	Coverpage Setup	Coverpage Setup	-	Set the machine to automatically send a pre-programmed cover page.
		Coverpage Note	-	
		Total Pages	-	
	Overseas Mode	-	-	Set to On if you have difficulty sending faxes overseas.
	Set New Default	-	-	Save your settings as the default.
	Factory Reset	-	-	Restore all settings back to the factory settings.
Save as Shortcut	-	-	-	Save the current settings as a shortcut.

[Fax] (When Fax Preview is On)

Level 3	Level 4	Level 5	Descriptions
Sending Faxes	Redial / Pause	-	Redial the last number called. When you are entering a fax or telephone number on the control panel, Redial changes to Pause on the LCD. Press Pause when you need a delay while dialling numbers, such as access codes and credit card numbers. You can also store a pause when you set up addresses.
	Hook	-	Press before dialling if you want to listen to make sure a fax machine has answered, and then press Fax Start.
	Address Book	-	Select the address of the recipient from the address book.
	Call History	-	Select a number from the Outgoing Call history and then send a fax to it, add it to the Address Book, or delete it.
	Fax Start	-	Send a fax.
	Options	-	Select your settings.
	Save as Shortcut	-	Save the current settings as a shortcut.
Received Faxes	Print/Delete	Print All (New Faxes)	Print the new received faxes.
		Print All (Old Faxes)	Print the old received faxes.
		Delete All (New Faxes)	Delete the new received faxes.
		Delete All (Old Faxes)	Delete the old received faxes.
Address Book	-	-	Select the address of the recipient from the address book.
Call History	-	-	Select a number from the Outgoing Call history and then send a fax to it, add it to the Address Book, or delete it.

[Copy]

Level 3	Level 4	Level 5	Descriptions
Mono Start	-	-	Make a monochrome or greyscale copy.
Colour Start	-	-	Make a colour copy.
ID	-	-	Make a copy of your ID card.
> (more Copy options)	Receipt	Mono Start	Set the preset copy settings of Receipt.
		Colour Start	
		ID	
		Save as Shortcut	
		> (more Copy options)	
		Options	
	Normal	Mono Start	Set the preset copy settings of Normal.
		Colour Start	
		ID	
		Save as Shortcut	
		> (more Copy options)	
		Options	
	2in1(ID)	Mono Start	Set the preset copy settings of 2in1(ID).
		Colour Start	
		ID	
		Save as Shortcut	
		> (more Copy options)	
		Options	
	2in1	Mono Start	Set the preset copy settings of 2in1.
		Colour Start	
		ID	
		Save as Shortcut	
		> (more Copy options)	
		Options	
	2sided(1⇒2)	Mono Start	Set the preset copy settings of 2-sided(1⇒2).
		Colour Start	
		ID	
		Save as Shortcut	
		> (more Copy options)	
		Options	
	2sided(2⇒2)	Mono Start	Set the preset copy settings of 2-sided(2⇒2).
		Colour Start	
		ID	
		Save as Shortcut	
		> (more Copy options)	
		Options	

Level 3	Level 4	Level 5	Descriptions
> (more Copy options)	Paper Save	Mono Start	Set the preset copy settings of Paper Save.
		Colour Start	
		ID	
		Save as Shortcut	
		> (more Copy options)	
		Options	
	Mono Start	-	Start Copying.
	Colour Start	-	
	Options	-	Select your settings.
Options	Enlarge/Reduce	100%	-
		Enlarge	Select an enlargement ratio for the next copy.
		Reduce	Select a reduction ratio for the next copy.
		Custom(25-400%)	Enter an enlargement or reduction ratio.
	Density	-	Adjust the density.
	Tray Use	-	Select the tray that will be used.
	2-sided Copy	Layout	Turn off or turn on 2-sided copying and select flip on long edge or flip on short edge.
	2-sided Copy Page Layout	-	Select a page layout option when you make 2-sided N in 1 copies from a 2-sided document.
	Quality	-	Select the Copy resolution for your document type.
	Contrast	-	Adjust the contrast.
	Stack/Sort	-	Select to stack or sort multiple copies.
	2in1/1in1	-	If you select 2 in 1 (ID), you can select the layout options.
	Page Layout	-	Make N in 1 and 2 in 1 ID copies.
	Auto Deskew	-	Set the machine to correct document skewing automatically.
	Colour Adjust	-	Adjust the colour for copies.
	Remove Background Colour	-	Change the amount of background colour that is removed.
Save as Shortcut	-	-	Save the current settings as a shortcut.

[Scan]

Level 3	Level 4	Level 5	Level 6	Descriptions
to USB (MFC-L3745CDW/ MFC-L3750CDW/ MFC-L3770CDW)	Other Scan to Actions	-	-	Scan documents to a USB flash drive.
	Options	Resolution	-	
		File Type	-	
		Scan Type	-	
		2-sided Scan (MFC-L3770CDW)	-	

Level 3	Level 4	Level 5	Level 6	Descriptions
to USB (MFC-L3745CDW/ MFC-L3750CDW/ MFC-L3770CDW)	Options	Document Size	-	Scan documents to a USB flash drive.
		Brightness	-	
		Contrast	-	
		File Name	-	
		File Name Style	-	
		File Size	-	
		Auto Deskew	-	
		Skip Blank Page		
		Skip Blank Page Sensitivity	-	
		Remove Background Colour	-	
		Set New Default	-	
		Factory Reset	-	
	Save as Shortcut	-	-	
	Start	-	-	
to PC	to File	Other Scan to Actions	-	Scan documents and save them to a folder on your computer.
		(Select USB or PC)	Options	
			Save as Shortcut	
			Start	
	to OCR	Other Scan to Actions	-	Convert your scanned document to an editable text file.
		(Select USB or PC)	Options	
			Save as Shortcut	
			Start	
	to Image	Other Scan to Actions	-	Scan photos or graphics into your graphics applications.
		(Select USB or PC)	Options	
			Save as Shortcut	
			Start	
	to E-mail	Other Scan to Actions	-	Send a scanned document as an email attachment.
		(Select USB or PC)	Options	
			Save as Shortcut	
			Start	
to FTP	Other Scan to Actions	-	-	Send scanned data via FTP.
	(Select Profile name)	Options	-	
		Save as Shortcut	-	
		Start	-	

Level 3	Level 4	Level 5	Level 6	Descriptions
to Network	Other Scan to Actions	-	-	Send scanned data to a CIFS server on your local network or on the Internet.
	(Select Profile name)	Options	-	
		Save as Shortcut	-	
		Start	-	
to SharePoint	Other Scan to Actions	-	-	Send scanned data via a SharePoint server.
	(Select Profile name)	Options	-	
		Save as Shortcut	-	
		Start	-	
to Web	-	-	-	Upload the scanned data to an Internet service.
WS Scan (Appears when you install a Web Services Scanner, which is displayed in your computer's Network explorer.)	Other Scan to Actions	-	-	Scan data using the Web Service protocol.
	Scan	-	-	
	Scan for E-mail	-	-	
	Scan for Fax	-	-	
	Scan for Print	-	-	

[Shortcuts]

Level 1	Level 2	Level 3	Descriptions
Edit/ Delete	(Select Shortcut)	Rename	Change the shortcut name.
		Edit	Change the shortcut settings.
		Delete	Delete the shortcut.
Add Shortcut	Copy	-	Select the settings you want.
	Fax	-	Select the settings you want.
	Scan	to File	Scan a monochrome or a colour document to your computer.
		to OCR	Convert your scanned document to an editable text file.
		to Image	Scan a colour picture into your graphics application.
		to USB	Scan documents to a USB flash drive.
		to E-mail	Scan a monochrome or a colour document into your email application.
		to Network	Send scanned data to a CIFS server on your local network or on the Internet.
		to FTP	Send scanned data via FTP.
		to SharePoint	Send scanned data via a SharePoint server.
	Web	-	Connect the Brother machine to an Internet service. Web services may have been added and service names may have been changed by the provider since this document was published.

Level 1	Level 2	Level 3	Descriptions
Add Shortcut	Apps	-	Connect the Brother machine to the Brother Apps service.
(These settings are available when each Shortcut name is pressed for two seconds.)	Rename	-	Change the shortcut name.
	Edit	-	Change the shortcut settings.
	Delete	-	Delete the shortcut.

[Secure Print]

Level 1	Level 2	Level 3	Descriptions
Secure Print	(Select User)	(Select Secure Print Job)	You can print data saved in the machine's memory when you enter your four-digit password. Active only when the machine has secure print data.

[Web]

Level 1	Descriptions
Web	Connect the Brother machine to an Internet service.

[Apps]

Level 1	Descriptions
Apps	Connect the Brother machine to the Brother Apps service.

[USB] (MFC-L3745CDW/MFC-L3750CDW/MFC-L3770CDW)

Level 1	Level 2	Descriptions
USB	Scan to USB	Scan documents to a USB flash drive.
	Direct Print	Print the data directly from the USB flash drive.

Related Information

- Settings and Features Tables

Change Machine Settings from Your Computer

- Change Machine Settings Using Web Based Management
- Change the Machine Settings Using Remote Setup
- Where Can I Find My Brother Machine's Network Settings?
- Network Management Software and Utilities

Change Machine Settings Using Web Based Management

Web Based Management is a utility that uses a standard web browser to manage your machine using the Hyper Text Transfer Protocol (HTTP) or Hyper Text Transfer Protocol over Secure Socket Layer (HTTPS).

- What is Web Based Management?
- Access Web Based Management
- Set or Change a Login Password for Web Based Management
- Network Management Software and Utilities
- Learn about Network Management Software and Utilities

What is Web Based Management?

Web Based Management is a utility that uses a standard web browser to manage your machine using the Hyper Text Transfer Protocol (HTTP) or Hyper Text Transfer Protocol over Secure Socket Layer (HTTPS). Type your machine's IP address into your web browser to access and change your print server settings.

- We recommend Microsoft Internet Explorer 11/Microsoft Edge for Windows and Safari 10/11 for Mac. Make sure that JavaScript and Cookies are always enabled in whichever browser you use.
- You must use the TCP/IP protocol on your network and have a valid IP address programmed into the print server and your computer.

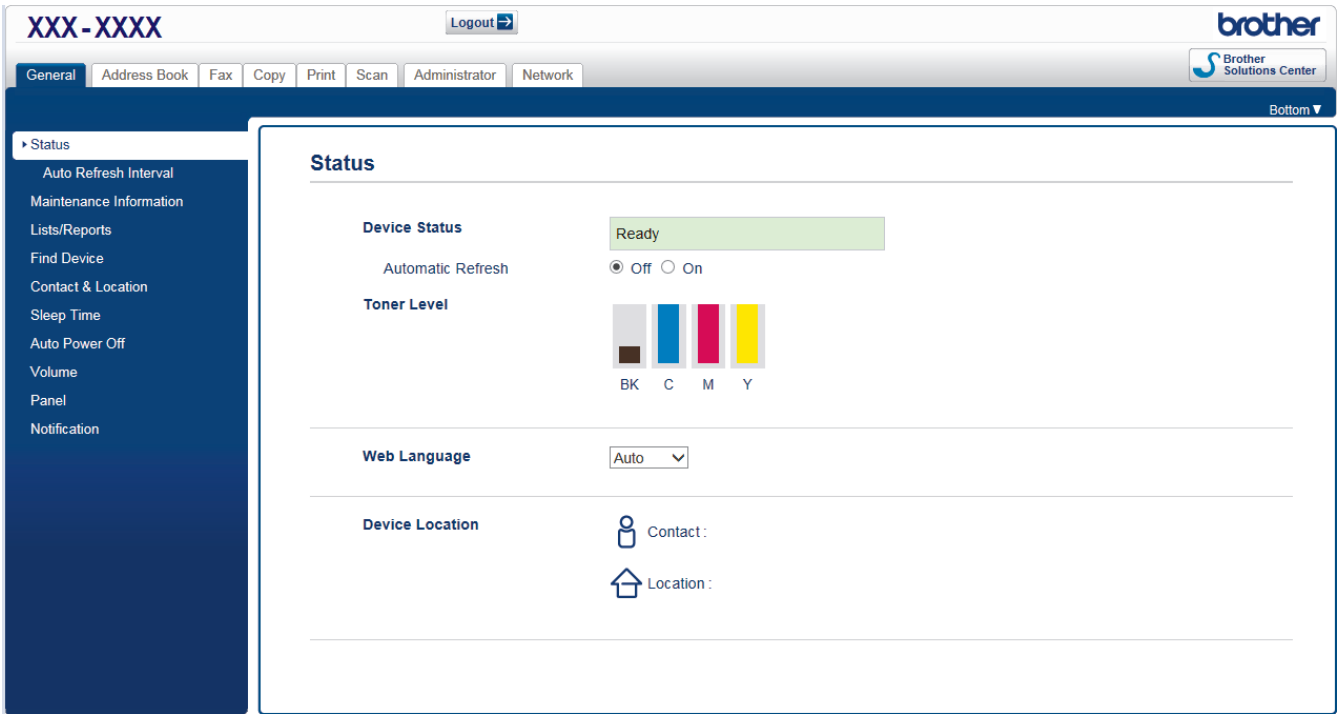

- The actual screen may differ from the screen shown above.

Related Information

- Change Machine Settings Using Web Based Management

Access Web Based Management

- We recommend using the HTTPS security protocol when configuring settings using Web Based Management.
- When you use HTTPS for Web Based Management configuration, your browser will display a warning dialog box. To avoid displaying the warning dialog box, you can install a self-signed certificate to use SSL/TLS communication. For more detailed information, see *Related Information*.
- The default login password to manage machine settings is **initpass**. We recommend you change it to protect your machine from unauthorised access.

1. Start your web browser.
2. Type "https://machine's IP address" in your browser's address bar (where "machine's IP address" is the machine's IP address).

   For example:

   https://192.168.1.2

- If you are using a Domain Name System or enable a NetBIOS name, you can type another name, such as "SharedPrinter" instead of the IP address.
  - For example:

    https://SharedPrinter

  If you enable a NetBIOS name, you can also use the node name.
  - For example:

    https://brnxxxxxxxxxxxx

  The NetBIOS name can be found in the Network Configuration Report.
- For Mac, access Web Based Management by clicking the machine's icon on the **Status Monitor** screen.

3. If the machine prompts you for a password, type it, and then click .

You can now change the print server settings.

If you change the protocol settings, you must restart the machine after clicking **Submit** to activate the configuration.

Every time you access Web Based Management, type the password in the **Login** field, and then click . After configuring the settings, log out by clicking .

Related Information

- Change Machine Settings Using Web Based Management

Related Topics:

- Print the Network Configuration Report
- Create a Self-signed Certificate
- Install the Self-signed Certificate for Windows users with Administrator Rights

Set or Change a Login Password for Web Based Management

We recommend changing the default login password to prevent unauthorised access to Web Based Management.

1. Start your web browser.
2. Type "https://machine's IP address" in your browser's address bar (where "machine's IP address" is the machine's IP address).

   For example:

   https://192.168.1.2

   - If you are using a Domain Name System or enable a NetBIOS name, you can type another name, such as "SharedPrinter" instead of the IP address.
     - For example:

       https://SharedPrinter

     If you enable a NetBIOS name, you can also use the node name.
     - For example:

       https://brnxxxxxxxxxxxx

     The NetBIOS name can be found in the Network Configuration Report.
   - For Mac, access Web Based Management by clicking the machine's icon on the **Status Monitor** screen.
3. Do one of the following:
   - If you have previously set your own password, type it, and then click .
   - If you have not previously set your own password, type **initpass**, and then click .
4. Click **Administrator**.
5. Type the password you want to use in the **Enter New Password** field (8 to 32 characters).
6. Retype the password in the **Confirm New Password** field.
7. Click **Submit**.

Related Information

- Change Machine Settings Using Web Based Management

Change the Machine Settings Using Remote Setup

Related Models: MFC-L3710CW/MFC-L3735CDN/MFC-L3745CDW/MFC-L3750CDW/MFC-L3770CDW

The Remote Setup program lets you configure many of your Brother machine's settings from your computer. When you start Remote Setup, the settings on your Brother machine will be downloaded to your computer and displayed on your screen. If you change the settings on your computer, you can upload them directly to the machine.

- Remote Setup (Windows)
- Remote Setup (Mac)

Remote Setup (Windows)

- Set Up the Brother Machine from Your Computer (Windows)
- Set Up the Brother Machine Using ControlCenter4 (Windows)
- Set Up Your Machine's Address Book Using ControlCenter4 (Windows)

Set Up the Brother Machine from Your Computer (Windows)

Related Models: MFC-L3710CW/MFC-L3735CDN/MFC-L3745CDW/MFC-L3750CDW/MFC-L3770CDW

If Secure Function Lock is set to On, you cannot use Remote Setup.

1. Do one of the following:
   - Windows 7

     Click **(Start)** > **All Programs** > **Brother** > **Brother Utilities**.

     Click the drop-down list and select your model name (if not already selected). Click **Tools** in the left navigation bar, and then click **Remote Setup**.
   - Windows 8 and Windows 10

     Launch (**Brother Utilities**), and then click the drop-down list and select your model name (if not already selected). Click **Tools** in the left navigation bar, and then click **Remote Setup**.

   The Remote Setup Program window appears.

When your machine is connected via a Network, type the password if required.

2. Configure the settings as needed.

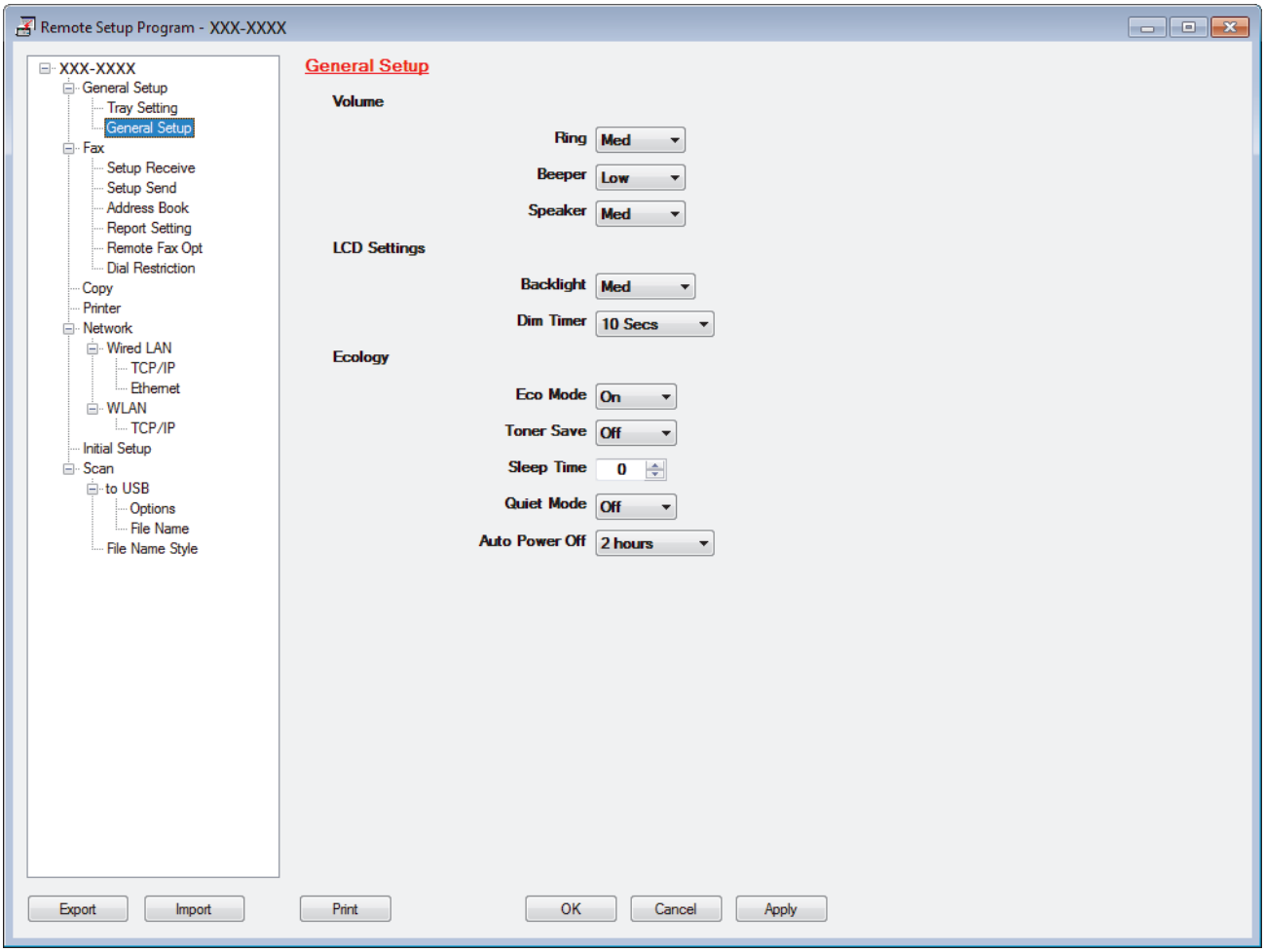

Export

Click to save the current configuration settings to a file.

Click **Export** to save your address book or all settings for your machine.

Import

Click to import a file and read its settings.

Print

Click to print the selected items on the machine. You cannot print the data until it is uploaded to the machine. Click **Apply** to upload the new data to the machine, and then click **Print**.

OK

Click to start uploading data to the machine, and then exit the Remote Setup Program. If an error message appears, confirm that your data is correct, and then click **OK**.

Cancel

Click to exit the Remote Setup Program without uploading data to the machine.

Apply

Click to upload data to the machine without exiting the Remote Setup Program.

3. Click **OK**.

- If your computer is protected by a firewall and is unable to use Remote Setup, you may need to configure the firewall settings to allow communication through port numbers 137 and 161.
- If you are using Windows Firewall and you installed the Brother software and drivers from the Brother installation disc, the necessary firewall settings have already been set.

Related Information

- Remote Setup (Windows)

Set Up the Brother Machine Using ControlCenter4 (Windows)

Related Models: MFC-L3710CW/MFC-L3735CDN/MFC-L3745CDW/MFC-L3750CDW/MFC-L3770CDW

If Secure Function Lock is set to On, you cannot use Remote Setup.

1. Click the (**ControlCenter4**) icon in the task tray, and then click **Open**.
2. Click the **Device Settings** tab.
3. Click the **Remote Setup** button.
4. Configure the settings as needed.

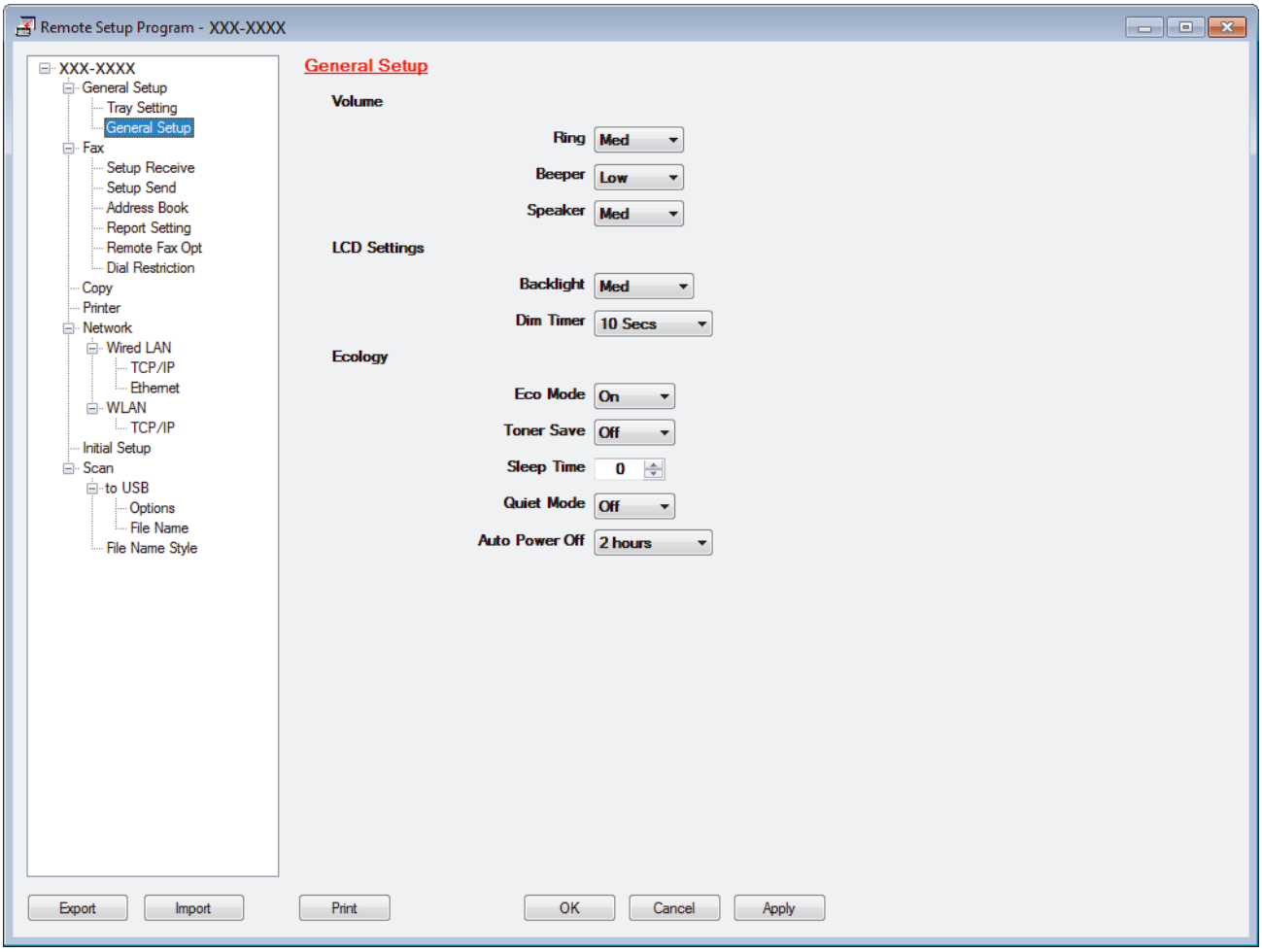

Export

Click to save the current configuration settings to a file.

Click **Export** to save your address book or all settings for your machine.

Import

Click to import a file and read its settings.

Print

Click to print the selected items on the machine. You cannot print the data until it is uploaded to the machine. Click **Apply** to upload the new data to the machine, and then click **Print**.

OK

Click to start uploading data to the machine, and then exit the Remote Setup Program. If an error message appears, confirm that your data is correct, and then click **OK**.

Cancel

Click to exit the Remote Setup Program without uploading data to the machine.

Apply

Click to upload data to the machine without exiting the Remote Setup Program.

5. Click **OK**.

- If your computer is protected by a firewall and is unable to use Remote Setup, you may need to configure the firewall settings to allow communication through port numbers 137 and 161.
- If you are using Windows Firewall and you installed the Brother software and drivers from the Brother installation disc, the necessary firewall settings have already been set.

Related Information

- ControlCenter4 (Windows)
- Remote Setup (Windows)

Set Up Your Machine's Address Book Using ControlCenter4 (Windows)

Related Models: MFC-L3710CW/MFC-L3735CDN/MFC-L3745CDW/MFC-L3750CDW/MFC-L3770CDW

Use Remote Setup through CC4 to add or change Address Book numbers on your computer.

If Secure Function Lock is set to On, you cannot use Remote Setup.

1. Click the (**ControlCenter4**) icon in the task tray, and then click **Open**.
2. Click the **Device Settings** tab.
3. Click the **Address Book** button.
   The **Address Book** opens in a Remote Setup window.
4. Add or update the Address Book information as needed.
5. Click **OK**.

Related Information

- Remote Setup (Windows)

Remote Setup (Mac)

- Set Up the Brother Machine with a USB Cable Connection (Mac)
- Set Up Your Machine's Address Book with a USB Cable Connection (Mac)

Set Up the Brother Machine with a USB Cable Connection (Mac)

Related Models: MFC-L3710CW/MFC-L3735CDN/MFC-L3745CDW/MFC-L3750CDW/MFC-L3770CDW

Use Remote Setup to set up your Brother machine with a USB cable connection.

To use Remote Setup, go to your model's **Downloads** page on the Brother Solutions Center at support.brother.com and download Remote Setup.

- If Secure Function Lock is set to On, you cannot use Remote Setup.
- Remote Setup for Mac supports USB connections only.

1. In the **Finder** menu bar, click **Go** > **Applications** > **Brother**, and then double-click the Remote Setup icon.
   The Remote Setup Program screen appears.

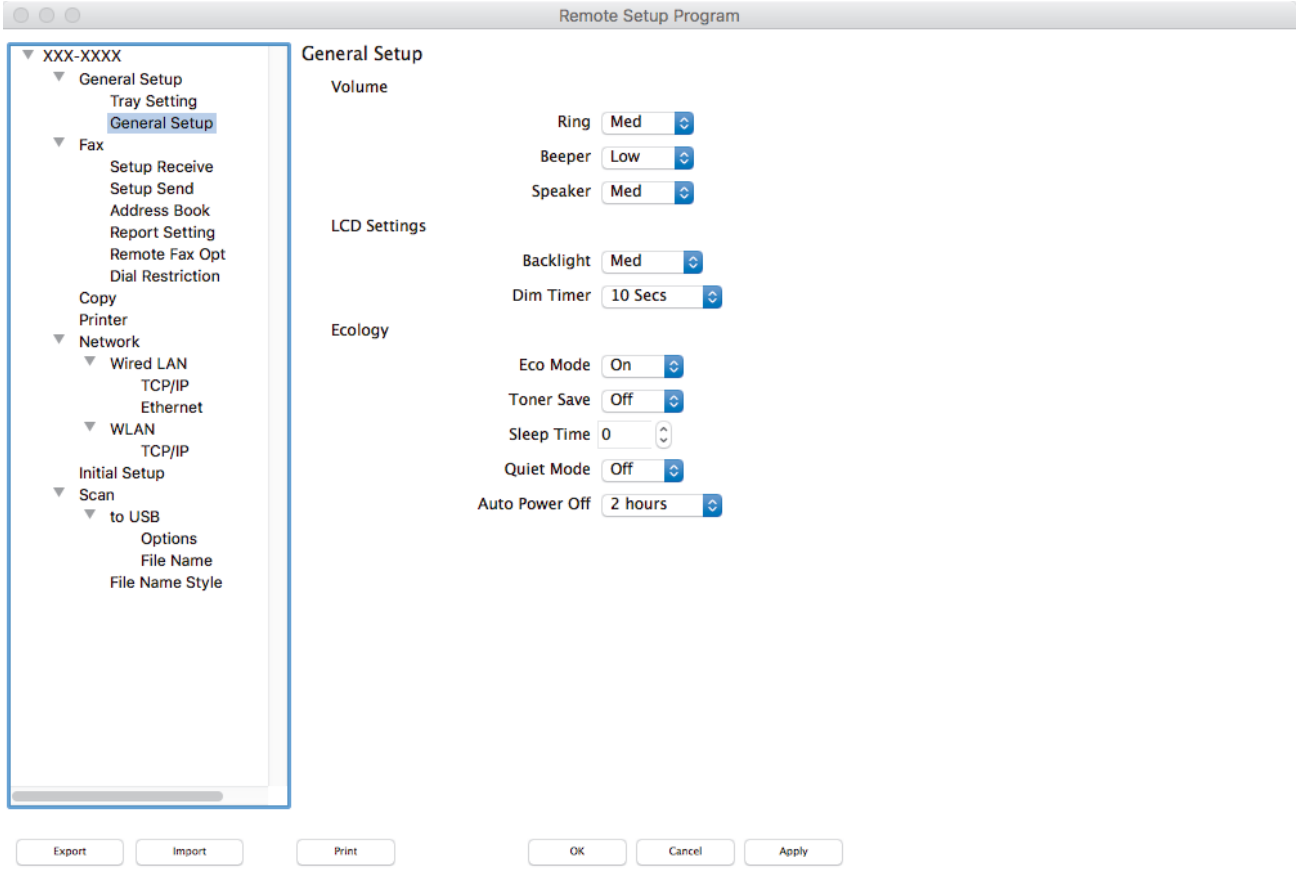

2. Configure the settings as needed.

Export

Click to save the current configuration settings to a file.

Click **Export** to save your address book or all settings for your machine.

Import

Click to import a file and read its settings.

Print

Click to print the selected items on the machine. You cannot print the data until it is uploaded to the machine. Click **Apply** to upload the new data to the machine, and then click **Print**.

OK

Click to start uploading data to the machine, and then exit the Remote Setup Program. If an error message appears, enter the correct data again, and then click **OK**.

Cancel

Click to exit the Remote Setup Program without uploading data to the machine.

Apply

Click to upload data to the machine without exiting the Remote Setup Program.

3. When finished, click **OK**.

Related Information

- Remote Setup (Mac)

Set Up Your Machine's Address Book with a USB Cable Connection (Mac)

Related Models: MFC-L3710CW/MFC-L3735CDN/MFC-L3745CDW/MFC-L3750CDW/MFC-L3770CDW

Use Remote Setup to add or change Address Book numbers on your computer with a USB cable connection.

To use Remote Setup, go to your model's **Downloads** page on the Brother Solutions Center at support.brother.com and download Remote Setup.

- If Secure Function Lock is set to On, you cannot use Remote Setup.
- Remote Setup for Mac supports USB connections only.

1. In the **Finder** menu bar, click **Go** > **Applications** > **Brother**, and then double-click the Remote Setup icon.
   The Remote Setup Program screen appears.
2. In the left menu, click **Address Book** in the **Fax**.
3. Add or update the Address Book information as needed.
4. When finished, click **OK**.

Related Information

- Remote Setup (Mac)

Appendix

- Specifications
- How to Enter Text on Your Brother Machine
- Supplies
- Important Information About Toner Cartridge Life
- Brother Numbers

Specifications

>> General Specifications
>> Document Size Specification
>> Print Media Specifications
>> Fax Specifications
>> Copy Specification
>> Scanner Specifications
>> Printer Specifications
>> Interface Specifications
>> Direct Print Feature Specifications
>> Supported Protocols and Security Features
>> Computer Requirements Specifications

General Specifications

Printer Type		• LED
Print Method		• Electrophotographic LED Printer
Memory Capacity	**Standard**	• 512 MB
LCD (Liquid Crystal Display) [1]		• DCP-L3510CDW/DCP-L3551CDW 16 characters x 2 lines • MFC-L3710CW/MFC-L3735CDN/MFC-L3745CDW/MFC-L3750CDW/MFC-L3770CDW 3.7 in. (93.4 mm) TFT Colour touchscreen LCD
Power Source		• 110 to 120 V AC 50/60 Hz
Power Consumption (Average)	**Peak**	• DCP-L3510CDW - • DCP-L3551CDW - • MFC-L3710CW - • MFC-L3735CDN - • MFC-L3745CDW - • MFC-L3750CDW Approximately 1300 W • MFC-L3770CDW -
	Printing [2]	• DCP-L3510CDW - • DCP-L3551CDW - • MFC-L3710CW - • MFC-L3735CDN - • MFC-L3745CDW - • MFC-L3750CDW Approximately 430 W at 25°C

Power Consumption (Average)		• MFC-L3770CDW -
	Printing (Quiet Mode) [2]	• DCP-L3510CDW - • DCP-L3551CDW - • MFC-L3710CW - • MFC-L3735CDN - • MFC-L3745CDW - • MFC-L3750CDW Approximately 260 W at 25°C • MFC-L3770CDW -
	Copying [2]	• DCP-L3510CDW - • DCP-L3551CDW - • MFC-L3710CW - • MFC-L3735CDN - • MFC-L3745CDW - • MFC-L3750CDW Approximately 430 W at 25°C • MFC-L3770CDW -
	Copying (Quiet Mode) [2]	• DCP-L3510CDW - • DCP-L3551CDW - • MFC-L3710CW - • MFC-L3735CDN - • MFC-L3745CDW - • MFC-L3750CDW Approximately 260 W at 25°C • MFC-L3770CDW -
	Ready [2]	• DCP-L3510CDW - • DCP-L3551CDW - • MFC-L3710CW -

Power Consumption (Average)		• MFC-L3735CDN - • MFC-L3745CDW - • MFC-L3750CDW Approximately 75 W at 25°C • MFC-L3770CDW -
	Sleep [2]	• DCP-L3510CDW - • DCP-L3551CDW - • MFC-L3710CW - • MFC-L3735CDN - • MFC-L3745CDW - • MFC-L3750CDW Approximately 10.1 W • MFC-L3770CDW -
	Deep Sleep [2]	• DCP-L3510CDW - • DCP-L3551CDW - • MFC-L3710CW - • MFC-L3735CDN - • MFC-L3745CDW - • MFC-L3750CDW Approximately 1.2 W • MFC-L3770CDW -
	Power Off [2 3 4]	• DCP-L3510CDW - • DCP-L3551CDW - • MFC-L3710CW - • MFC-L3735CDN - • MFC-L3745CDW - • MFC-L3750CDW Approximately 0.02 W • MFC-L3770CDW -
Dimensions		Unit: mm

(Typical outline view) (DCP-L3510CDW) 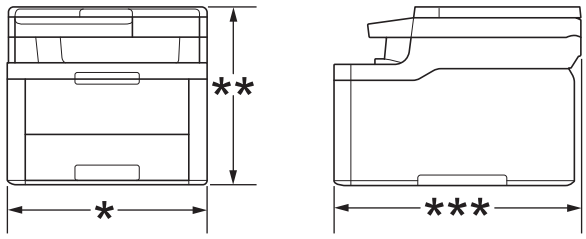 (DCP-L3551CDW/MFC-L3710CW/MFC-L3735CDN/ MFC-L3745CDW/MFC-L3750CDW/MFC-L3770CDW) 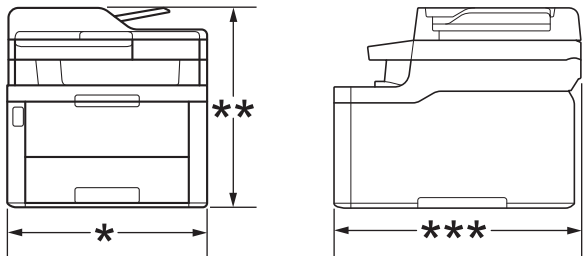 	• DCP-L3510CDW * : 410 ** : 368 *** : 475 • DCP-L3551CDW/MFC-L3710CW/MFC-L3735CDN/ MFC-L3745CDW/MFC-L3750CDW * : 410 ** : 414 *** : 475 • MFC-L3770CDW * : 410 ** : 414 *** : 509
Weights (with supplies)	• DCP-L3510CDW 21.9 kg • DCP-L3551CDW 23.5 kg • MFC-L3710CW 22.5 kg • MFC-L3735CDN 23.5 kg • MFC-L3745CDW 23.4 kg • MFC-L3750CDW 23.6 kg • MFC-L3770CDW 24.7 kg

Noise Level	**Sound Pressure**	**Printing**	• MFC-L3735CDN/MFC-L3745CDW/ MFC-L3750CDW/MFC-L3770CDW LpAm = 47 dB (A) • DCP-L3510CDW/DCP-L3551CDW/MFC-L3710CW LpAm = 45 dB (A)
		Printing (Quiet Mode)	• LpAm = 43 dB (A)
		Ready	• Default: Inaudible [5]
	Sound Power	**Printing**	**Monochrome** • DCP-L3510CDW/DCP-L3551CDW/MFC-L3710CW LWAd = 5.86 B (A) • MFC-L3735CDN/MFC-L3745CDW/ MFC-L3750CDW/MFC-L3770CDW LWAd = 6.11 B (A)
			Colour • DCP-L3510CDW/DCP-L3551CDW/MFC-L3710CW LWAd = 5.92 B (A) • MFC-L3735CDN/MFC-L3745CDW/ MFC-L3750CDW/MFC-L3770CDW LWAd = 6.16 B (A)
		Printing (Quiet Mode)	**Monochrome** • LWAd = 5.71 B (A)
			Colour • LWAd = 5.73 B (A)
		Ready	• Default: Inaudible [6]
Temperature	**Operating**		• From 10°C to 32°C
	Storage		• From 0°C to 40°C
Humidity	**Operating**		• 20 to 80% (without condensation)
	Storage		• 10 to 95% (without condensation)
Automatic Document Feeder (ADF) (DCP-L3551CDW/MFC-L3710CW/MFC-L3735CDN/ MFC-L3745CDW/MFC-L3750CDW/MFC-L3770CDW)			• Up to 50 sheets For best results we recommend: • Temperature: 20 to 30 °C • Humidity: 50 to 70% • Paper: 80 g/m^2

1 Measured diagonally.
2 USB connections to computer
3 Measured according to IEC 62301 Edition 2.0.
4 Power consumption varies slightly depending on the usage environment.
5 If fan motor is functioning: LpAm = 33 dB (A)
6 If fan motor is functioning: LWAd = 4.67 B (A)

Document Size Specification

Document Size	**ADF Width**	• 105 mm to 215.9 mm
	ADF Length	• 147.3 mm to 355.6 mm
	Scanner Glass Width	• Maximum 215.9 mm
	Scanner Glass Length	• Maximum 300 mm

Print Media Specifications

Paper Input	**Paper Tray (Standard)**	**Paper Type**	• Plain Paper, Thin Paper, Thick Paper, Recycled Paper
		Paper Size	• A4, Letter, B5 (JIS), A5, A5 (Long Edge), A6, Executive, Legal, Folio, Mexico Legal, India Legal
		Paper Weight	• 60 to 163 g/m²
		Maximum Paper Capacity	• Up to 250 sheets of 80 g/m^2 Plain Paper
	Multi-Purpose Tray (MP tray) (MFC-L3770CDW)	**Paper Type**	• Plain Paper, Thin Paper, Thick Paper, Recycled Paper, Bond, Label, Envelope, Env. Thin, Env.Thick, Glossy Paper
		Paper Size	• Width: 76.2 mm to 216 mm • Length: 116 mm to 355.6 mm • Envelope: COM-10, DL, C5, Monarch
		Paper Weight	• 60 to 163 g/m^2
		Maximum Paper Capacity	• Up to 30 sheets of 80 g/m^2 Plain Paper • Envelope: three envelopes up to 6 mm thick
	Manual Feed Slot (DCP-L3510CDW/ DCP-L3551CDW/MFC-L3710CW/ MFC-L3735CDN/MFC-L3745CDW/ MFC-L3750CDW)	**Paper Type**	• Plain Paper, Thin Paper, Thick Paper, Recycled Paper, Bond, Label, Envelope, Env. Thin, Env.Thick, Glossy Paper
		Paper Size	• Width: 76.2 to 216 mm • Length: 116 mm to 355.6 mm • Envelope: COM-10, DL, C5, Monarch
		Paper Weight	• 60 to 163 g/m^2
		Maximum Paper Capacity	• One sheet
Paper Output [1]	**Face Down Output Tray**		• Up to 150 sheets of 80 g/m^2 Plain Paper (face-down delivery to the face-down output paper tray)
	Face Up Output Tray		• One sheet (face-up delivery to the face-up output tray)
2-sided	**Automatic 2-sided Printing** (DCP-L3510CDW/DCP-L3551CDW/ MFC-L3735CDN/MFC-L3745CDW/ MFC-L3750CDW/MFC-L3770CDW)	**Paper Type**	• Plain Paper, Thin Paper, Thick Paper, Recycled Paper
		Paper Size	• A4
		Paper Weight	• 60 to 163 g/m^2

[1] For labels, we recommend removing the printed sheets from the output paper tray immediately after they exit the machine to avoid the possibility of smudging.

Fax Specifications

NOTE

This feature is available for MFC models.

Compatibility		• ITU-T Super Group 3
Coding System		• MH / MR / MMR / JBIG
Modem Speed		• 33,600 bps (with Automatic Fallback)
2-sided Print Receiving		• MFC-L3735CDN/MFC-L3745CDW/MFC-L3750CDW/MFC-L3770CDW Yes
Automatic 2-sided Sending		• MFC-L3770CDW Yes (from ADF)
Scanning Width		• Maximum 208 mm
Printing Width		• Maximum 207.4 mm
Greyscale		• 8 bit / 256 levels
Resolution	**Horizontal**	• 203 dpi
	Vertical	• Standard: 98 dpi • Fine: 196 dpi • Super fine: 392 dpi • Photo: 196 dpi
Address Book		• 200 Locations
Groups		• Up to 20
Broadcasting		• 250 Locations
Automatic Redial		• 1 time at 5-minute intervals
Memory Transmission		• Up to 500 pages [1]
Out of Paper Reception		• Up to 500 pages [1]

1 'Pages' refers to the 'ITU-T Test Chart #1' (a typical business letter, Standard resolution, JBIG code).

Copy Specification

Copy Width	• Maximum 210 mm
Automatic 2-sided Copy	• MFC-L3770CDW Yes (from ADF)
Sort Copy	• Yes
Stack Copy	• Up to 99 pages
Enlarge/Reduce	• 25 to 400% (in increments of 1%)
Resolution	• Maximum 600 x 600 dpi
First Copy Out Time [1]	**Monochrome** • MFC-L3735CDN/MFC-L3745CDW/MFC-L3750CDW/MFC-L3770CDW Less than 15 seconds at 23°C / 115 V • DCP-L3510CDW/DCP-L3551CDW/MFC-L3710CW Less than 17.5 seconds at 23°C / 115 V
	Colour • MFC-L3735CDN/MFC-L3745CDW/MFC-L3750CDW/MFC-L3770CDW

First Copy Out Time [1]	Less than 16 seconds at 23°C / 115 V • DCP-L3510CDW/DCP-L3551CDW/MFC-L3710CW Less than 17.5 seconds at 23°C / 115 V

[1] From Ready Mode and standard tray

Scanner Specifications

Colour / Black	• Yes / Yes
TWAIN Compliant	• Yes (Windows 7 / Windows 8 / Windows 8.1 / Windows 10) (macOS v10.11.6, v10.12.x, v10.13.x)
WIA Compliant	• Yes (Windows 7 / Windows 8 / Windows 8.1 / Windows 10)
Colour Depth	• 48 bit colour Processing (Input) • 24 bit colour Processing (Output)
Grey Scale	• 16 bit colour Processing (Input) • 8 bit colour Processing (Output)
Resolution [1]	• Up to 19200 x 19200 dpi (interpolated) • Up to 1200 x 2400 dpi (from Scanner Glass) • Up to 600 x 600 dpi (from ADF)
Scanning Width	• Maximum 210 mm
Automatic 2-sided Scanning	• MFC-L3770CDW Yes (from ADF)

[1] Maximum 1200 × 1200 dpi scanning with the WIA driver in Windows 7, Windows 8, Windows 8.1 and Windows 10 (resolution up to 19200 × 19200 dpi can be selected by using the scanner utility)

Printer Specifications

Automatic 2-sided Print		• DCP-L3510CDW/DCP-L3551CDW/MFC-L3735CDN/MFC-L3745CDW/ MFC-L3750CDW/MFC-L3770CDW Yes
Emulation		• PCL6, BR-Script3, PDF Version 1.7, XPS Version 1.0
Resolution		• 600 x 600 dpi, 2,400 dpi class (2400 x 600) quality
Print Speed [1] [2]	**1-sided print**	**Monochrome** • DCP-L3510CDW/DCP-L3551CDW/MFC-L3710CW Up to 19 pages/minute (Letter size) Up to 18 pages/minute (A4 size) • MFC-L3735CDN/MFC-L3750CDW/MFC-L3770CDW Up to 25 pages/minute (Letter size) Up to 24 pages/minute (A4 size) • MFC-L3745CDW Up to 23 pages/minute (Letter size) Up to 22 pages/minute (A4 size)
		Colour • DCP-L3510CDW/DCP-L3551CDW/MFC-L3710CW Up to 19 pages/minute (Letter size) Up to 18 pages/minute (A4 size) • MFC-L3735CDN/MFC-L3750CDW/MFC-L3770CDW

Print Speed [1] [2]	**1-sided print**	Up to 25 pages/minute (Letter size) Up to 24 pages/minute (A4 size) • MFC-L3745CDW Up to 23 pages/minute (Letter size) Up to 22 pages/minute (A4 size)
	2-sided Print	**Monochrome** • DCP-L3510CDW/DCP-L3551CDW Up to 6 sides/minute (Up to 3 sheets/minute) (Letter or A4 size) • MFC-L3735CDN/MFC-L3745CDW/MFC-L3750CDW/MFC-L3770CDW Up to 8 sides/minute (Up to 4 sheets/minute) (Letter or A4 size)
		Colour • DCP-L3510CDW/DCP-L3551CDW Up to 6 sides/minute (Up to 3 sheets/minute) (Letter or A4 size) • MFC-L3735CDN/MFC-L3745CDW/MFC-L3750CDW/MFC-L3770CDW Up to 8 sides/minute (Up to 4 sheets/minute) (Letter or A4 size)
First Print Time [3]		**Monochrome** • MFC-L3735CDN/MFC-L3745CDW/MFC-L3750CDW/MFC-L3770CDW Less than 14 seconds at 23°C / 115 V • DCP-L3510CDW/DCP-L3551CDW/MFC-L3710CW Less than 15.5 seconds at 23°C / 115 V
		Colour • MFC-L3735CDN/MFC-L3745CDW/MFC-L3750CDW/MFC-L3770CDW Less than 14 seconds at 23°C / 115 V • DCP-L3510CDW/DCP-L3551CDW/MFC-L3710CW Less than 15.5 seconds at 23°C / 115 V

1 The print speed may change depending on the type of document you print.
2 Print speed may be slower when the machine is connected by wireless LAN.
3 Print from Ready mode and standard tray.

Interface Specifications

USB [1] [2]	• Hi-Speed USB 2.0 Use a USB 2.0 interface cable that is no more than 2 metres long.
LAN	• DCP-L3551CDW/MFC-L3735CDN/MFC-L3745CDW/MFC-L3750CDW/MFC-L3770CDW 10Base-T/100Base-TX [3]
Wireless LAN	• DCP-L3510CDW/DCP-L3551CDW/MFC-L3710CW/MFC-L3745CDW/MFC-L3750CDW/ MFC-L3770CDW IEEE 802.11b/g/n (Infrastructure Mode) IEEE 802.11g/n (Wi-Fi Direct®)
NFC	• MFC-L3770CDW Yes

1 Your machine has a USB 2.0 Hi-Speed interface. The machine can also be connected to a computer that has a USB 1.1 interface.
2 Third party USB ports are not supported.
3 Use a straight-through Category 5 (or greater) twisted-pair cable.

Direct Print Feature Specifications

NOTE

This function is available for MFC-L3745CDW/MFC-L3750CDW/MFC-L3770CDW.

Compatibility	• PDF version1.7, JPEG, Exif+JPEG, PRN (created by own printer driver), TIFF (scanned by Brother models), XPS version 1.0
Interface	• USB direct interface : Front x 1

Supported Protocols and Security Features

Ethernet

10Base-T/100Base-TX

Wireless LAN

IEEE 802.11b/g/n (Infrastructure Mode), IEEE 802.11g/n (Wi-Fi Direct)

Protocols (IPv4)

ARP, RARP, BOOTP, DHCP, APIPA (Auto IP), WINS/NetBIOS name resolution, DNS Resolver, mDNS, LLMNR responder, LPR/LPD, Custom Raw Port/Port9100, SMTP Client, IPP/IPPS, FTP Client and Server, CIFS Client, TELNET Server, SNMPv1/v2c/v3, HTTP/HTTPS server, TFTP client and server, ICMP, Web Services (Print/Scan), SNTP Client

Protocols (IPv6)

NDP, RA, DNS resolver, mDNS, LLMNR responder, LPR/LPD, Custom Raw Port/Port9100, IPP/IPPS, SMTP Client, FTP Client and Server, CIFS Client, TELNET Server, SNMPv1/v2c/v3, HTTP/HTTPS server, TFTP client and server, ICMPv6, SNTP Client, Web Services (Print/Scan)

Network Security (Wired)

SMTP-AUTH, SSL/TLS (IPPS, HTTPS, SMTP), SNMP v3, 802.1x (EAP-MD5, EAP-FAST, PEAP, EAP-TLS, EAP-TTLS), Kerberos

Network Security (Wireless)

SMTP-AUTH, SSL/TLS (IPPS, HTTPS, SMTP), SNMP v3, 802.1x (LEAP, EAP-FAST, PEAP, EAP-TLS, EAP-TTLS), Kerberos

Wireless Network Security

WEP 64/128 bit, WPA-PSK (TKIP/AES), WPA2-PSK (TKIP/AES) [1]

Wireless Certification

Wi-Fi Certification Mark License (WPA™/WPA2™ - Enterprise, Personal), Wi-Fi Protected Setup™ (WPS) Identifier Mark License, Wi-Fi CERTIFIED™ Wi-Fi Direct

Computer Requirements Specifications

Supported Operating Systems And Software Functions

Computer Platform & Operating System Version	**PC Interface**				**Processor**	**Hard Disk Space to Install**	
	Parallel (IEEE1284)	**USB** [1]	**10Base-T/ 100Base-TX (Ethernet)**	**Wireless 802.11b/g/n**		**For Drivers**	**For Applications (including Drivers)**

[1] Wi-Fi Direct supports WPA2-PSK (AES) only.

Windows Operating System	Windows 7 SP1 / 8 / 8.1 [2] [3]	N/A	Printing PC Fax [4] Scanning		32 bit (x86) or 64 bit (x64) processor	650 MB	1.2 GB
	Windows 10 Home / 10 Pro / 10 Education / 10 Enterprise [2] [3]						
	Windows Server 2008		N/A	Printing		50 MB	N/A
	Windows Server 2008 R2				64 bit (x64) processor		
	Windows Server 2012						
	Windows Server 2012 R2						
	Windows Server 2016						
Mac Operating System	macOS v10.11.6		Printing PC-Fax (Send) [4] Scanning		Intel® Processor	80 MB	400 MB
	macOS v10.12.x						
	macOS v10.13.x						

1 Third party USB ports are not supported.

2 For WIA, 1200x1200 resolution. Brother Scanner Utility enables resolutions up to 19200 x 19200 dpi.

3 PaperPort™ 14SE supports Windows 7 SP1, Windows8, Windows 8.1 and Windows 10.

4 PC-Fax supports black and white only.

For the latest driver updates, go to your model's **Downloads** page on the Brother Solutions Center at support.brother.com.

All trademarks, brand and product names are the property of their respective companies.

Related Information

- Appendix

How to Enter Text on Your Brother Machine

>> DCP-L3510CDW/DCP-L3551CDW
>> MFC-L3710CW/MFC-L3735CDN/MFC-L3745CDW/MFC-L3750CDW/MFC-L3770CDW

DCP-L3510CDW/DCP-L3551CDW

When text is required, enter characters on the machine. The characters that are available may differ depending on the operation you perform.

- Hold down or repeatedly press ▲ or ▼ to select a character from this list:
  0123456789abcdefghijklmnopqrstuvwxyzABCDEFGHIJKLMNOPQRSTUVWXYZ(space)!"#$%&'()*+,-./:;<=>?@[\]^_‘{|}~
- Press **OK** when the character or symbol you want is displayed, and then enter the next character.
- Press **Clear** to delete characters entered incorrectly.

MFC-L3710CW/MFC-L3735CDN/MFC-L3745CDW/MFC-L3750CDW/MFC-L3770CDW

- When you must enter text on your Brother machine, a keyboard appears on the LCD.
- The characters that are available may differ depending on your country.
- The keyboard layout may differ depending on the operation you perform.

- Press A 1 @ to cycle between letters, numbers and special characters.
- Press ⇧aA to cycle between lowercase and uppercase letters.
- To move the cursor to the left or right, press ◀ or ▶.

Inserting spaces

- To enter a space, press [Space] or ▶.

Making corrections

- If you entered a character incorrectly and want to change it, press ◀ or ▶ to move the cursor to the incorrect character, and then press ⌫. Enter the correct character.
- To insert a character, press ◀ or ▶ to move the cursor to the correct place, and then enter the character.
- Press ⌫ for each character you want to erase, or press and hold ⌫ to erase all the characters.

Related Information

- Appendix

Related Topics:

- Configure Your Machine for a Wireless Network Using the Machine's Control Panel Setup Wizard
- Configure Your Machine for a Wireless Network When the SSID Is Not Broadcast
- Set Your Station ID

Supplies

When the time comes to replace supplies, such as the toner or drum, an error message will appear on your machine's control panel or in the Status Monitor. For more information about the supplies for your machine, visit www.brother.com/original/index.html or contact your local Brother dealer.

The Supply Model Name will vary depending on your country and region.

Supply Items	Supply Model Name	Approximate Life (Page Yield)
Toner Cartridge 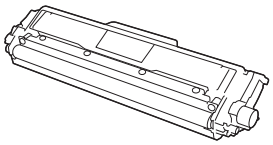	Standard Toner: TN-263	• Black: Approximately 1,400 pages [1] [2] • Cyan / Magenta / Yellow: Approximately 1,300 pages [1] [2]
	High Yield Toner: TN-267	• Black: Approximately 3,000 pages [1] [2] • Cyan / Magenta / Yellow: Approximately 2,300 pages [1] [2]
	Inbox Toner: (Supplied with your machine)	• Black: Approximately 1,000 pages [1] [2] • Cyan / Magenta / Yellow: Approximately 1,000 pages [1] [2]
Drum Unit 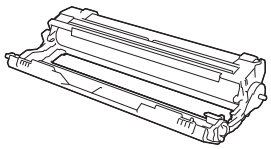	DR-263CL [3]	Approximately 18,000 pages [4]
Belt Unit 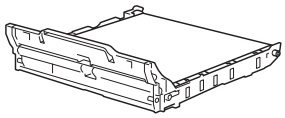	BU-223CL	Approximately 50,000 pages [5]
Waste Toner Box 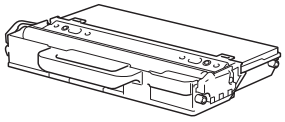	WT-223CL	Approximately 50,000 pages [2]

1 Approximate cartridge yield is declared in accordance with ISO/IEC 19798.

2 A4 or Letter size single-sided pages

3 Contains four drum units; one black and three colours.

4 Approximately 18,000 pages based on one page per job [A4/Letter single-sided pages]. The number of pages may be affected due to a variety of factors including but not limited to media type and media size.

5 Approximately 50,000 pages based on two pages per job [A4/Letter single-sided pages]. The number of pages may be affected due to a variety of factors including but not limited to media type and media size.

Related Information

- Appendix

Related Topics:

- Replace Supplies

Important Information About Toner Cartridge Life

Toner Cartridge Life

This product detects the life of the toner cartridges using the following two methods:

- Detection by counting the dots of each colour that are necessary to create an image
- Detection by counting the rotations of the developer roller

This product has a function that will count the dots of each colour used to print every document and the rotations of each toner cartridge's developer roller. The print operation will stop when either of the upper limits is reached. The upper limit is set above the number of dots or rotations that would be required for the cartridge to perform consistently with its advertised page yield. This function is intended to reduce the risk of poor print quality and damage to the machine.

There are two messages that indicate when the toner is low or needs replacing: Toner Low and Replace Toner.

Toner Low is displayed on the LCD when the number of dots or rotations of the developer roller nears its maximum count: Replace Toner is displayed on the LCD when the number of dots or rotations of the developer roller reaches its maximum count.

Colour Correction

The number of developer roller rotations that are counted may not only be for normal operations, such as printing and copying, but also for machine adjustments, such as Colour Calibration and Colour Registration.

Colour Calibration (Adjustment of Colour Density)

To obtain stable print quality, the density of each toner cartridge needs to be maintained at a fixed value. If the density balance between the colours cannot be kept, the tint becomes unstable, and accurate colour reproduction becomes unavailable. The toner density can change due to chemical changes to the toner that affect its electrical charge, deterioration of the developer unit, and temperature and humidity levels in the machine. During calibration, the density level adjustment test patterns are printed on the belt unit.

Calibration is mainly performed at the following times:

- When the user manually selects calibration from the operation panel or the printer driver.

  (Please perform calibration if colour density needs to be improved.)
- When a used toner cartridge is replaced with a new one.
- When the machine detects that the ambient temperature and humidity have changed.
- When a specified number of printed pages is reached.

Colour Registration (Correction of Colour Position)

In this machine, the drum unit and developer unit are prepared for black (K), yellow (Y), magenta (M), and cyan (C), respectively. Four colour images are combined into one image, and therefore colour registration errors (for example, how the four colour images align) might occur. When registration errors occur, registration correction test patterns are printed on the belt unit.

Registration is mainly performed at the following times:

- When the user manually selects registration from the operation panel.

  (Please perform registration if a colour registration error needs to be corrected.)
- When a specified number of printed pages is reached.

Related Information

- Appendix

Brother Numbers

IMPORTANT

For technical help, you must call the country where you bought the machine. Calls must be made **from within** that country.

>> FAQs (Frequently Asked Questions)
>> Customer Service

FAQs (Frequently Asked Questions)

The Brother Solutions Center is our one-stop resource for all your machine needs. Download the latest software and utilities and read FAQs and Troubleshooting tips to learn how to get the most from your Brother product.

Check here for Brother driver updates, too.

support.brother.com

Customer Service

Visit www.brother.com for contact information on your local Brother office.

Service centre locations

For service centres in your area, contact your local Brother Office. Contact information for local Brother Offices can be found at www.brother.com and selecting your country.

Internet Addresses

Brother Global Web Site: www.brother.com

For Frequently Asked Questions (FAQs), Product Support and Technical Questions, and Driver Updates and Utilities:

support.brother.com

Related Information

- Appendix

Visit us on the World Wide Web
www.brother.com

Brother Earth
www.brotherearth.com

TWN-ENG
Version B