brother P-touch TZ TAPE 1280

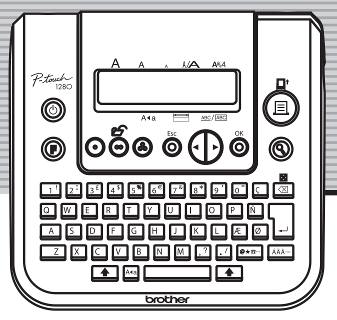

User's Guide

Deutsch / **English**

www.brother.com

Printed in China

INTRODUCTION

With your PT-1280, you can create labels for any application. Select from the many frames, character sizes and styles to design beautiful custom labels. In addition, the variety of tape cartridges available allows you to print labels with different widths and exciting colours.
Read this manual carefully before starting and keep the manual in a handy place for future reference.

Declaration of Conformity
(Europe/Turkey only)

We, BROTHER INDUSTRIES, LTD.
15-1, Naeshiro-cho, Mizuho-ku,
Nagoya, 467-8561, Japan
declare that this product is in compliance with the essential requirements and other relevant provisions of Directives 2004/108/EC and 2005/32/EC.
The Adapter AD-24ES is in compliance with the essential requirements and other relevant provisions of Directive 2006/95/EC.
The Declaration of Conformity (DoC) is on our Web site. Please go to http://solutions.brother.com -> choose region (eg. Europe) -> choose country -> choose your model -> choose "Manuals"-> choose Declaration of Conformity (*Select Language when required).

GENERAL PRECAUTIONS

- **Use only Brother TZ tapes with this machine. Do not use tapes that do not have the TZ mark.**
- Do not clean the machine with alcohol or other organic solvents. Only use a soft, dry cloth.
- Do not touch the print head mechanism. Use a soft wipe (e.g. a cotton swab) when cleaning the print head.
- To avoid injuries, do not touch the edge of the cutter.
- To prevent damage or breakage of the glass, do not press hard on the LCD display.
- Do not put any foreign objects into or heavy objects on the machine.
- Do not leave any rubber or vinyl on the machine for an extended period of time, otherwise the machine may be stained.
- Do not get the machine wet, such as by touching with wet hands or spilling beverages on to the machine.
- Do not expose the machine to extremely high temperatures or high humidity. Never leave it on the dashboard or in the back of your car, near heaters or other hot appliances. Keep it out of both direct sunlight and rain.
- Avoid using the machine in extremely dusty places.
- **Do not pull on the tape being fed from the P-touch, otherwise the tape cassette may be damaged.**
- Do not attempt to cut the tape while printing or feeding since this will damage the tape.
- Do not try to print labels using an empty tape cassette set in the P-touch. Doing so will damage the print head.
- Remove the batteries and disconnect the AC adapter if you do not intend to use the machine for an extended period of time. (**Note:** When power is disconnected for more than three minutes, all text shown in the display and any text files stored in the memory will be lost. Language and unit settings will also be cleared.)
- Do not use old and new batteries together or mix alkaline batteries with other type batteries, or set the positive and negative end in the wrong position. Otherwise the batteries may have leakage or fracture.
- **Use only the suggested AC adapter for this machine to prevent any damage or failure.**

[GETTING STARTED]

1 PREPARATION

Power Supply & Tape Cassettes

Make sure that the power is turned off when replacing batteries or tape cassette.

1 Open the back cover by pressing in the rough area at the top end of the machine.
If a tape cassette is already installed, remove it by pulling it straight up. Also, if batteries are already installed, remove them.

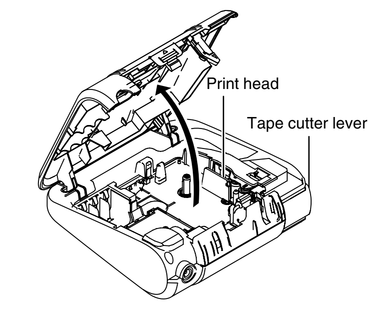

2 Insert six new AAA-size alkaline batteries (LR03), making sure that their poles point in the correct directions. Always replace all six batteries at the same time using brand new ones.

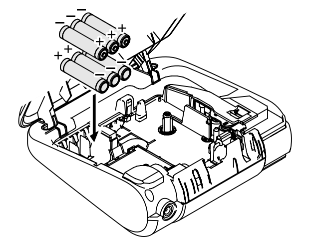

3 Insert a tape cassette, making sure that it snaps into place.

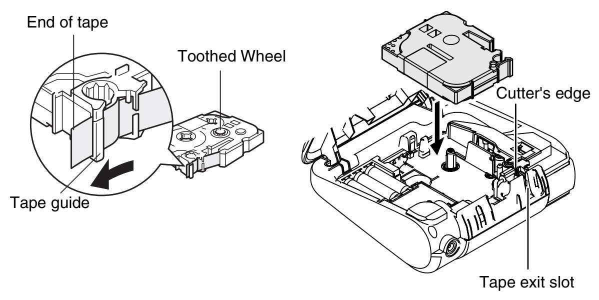

- Make sure that the end of the tape feeds under the tape guides.
- If the ink ribbon is loose, use your finger to wind the toothed wheel in the direction of the arrow on the cassette.
- Use only Brother TZ tapes with this machine.

4 Securely close the back cover, making sure that it snaps into place.
After you have installed the tape, feed the tape (see Feeding) once and then push in the tape cutter lever to cut the tape.

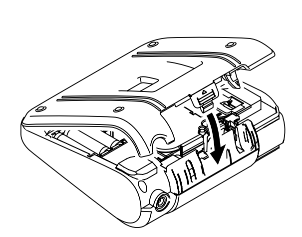

When using AC adapter (AD-24ES)
1. Insert the plug on the adapter cord into the adapter jack on the top end of the machine.
2. Insert the plug into the nearest standard electrical outlet.

For memory back up, when the AC adapter is unplugged, please use AAA-size alkaline batteries (LR03).

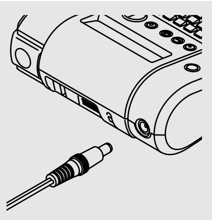

2 OPERATION

Keyboard & LCD

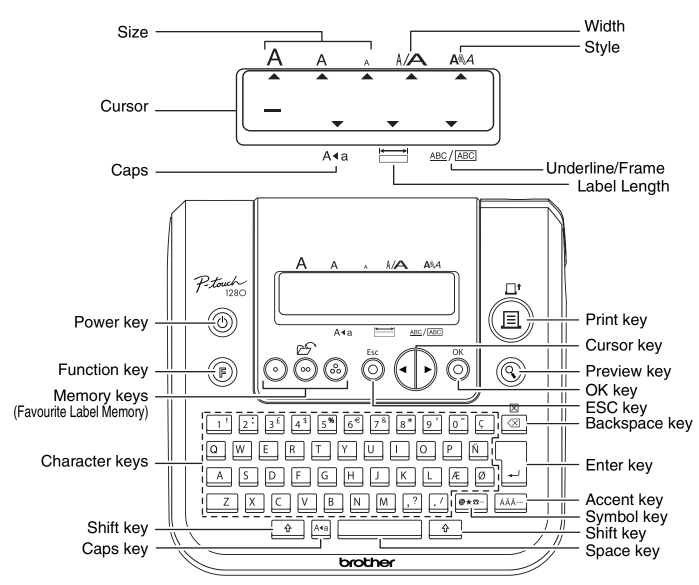

- The LCD shows one row of 15 characters; however, the text that you enter can be up to 80 characters in length.
- Use Cursor key while holding down Shift key to go to beginning/ end of the text.

Initial Setting

1 Start your machine
Supply power by using six AAA alkaline batteries or the AC adapter, and then press ⏻.

2 Set the language (Language option differ by distribution)

◂ English ▸

Choose a language with ◂▸ and press OK / ↵.

- The machine automatically turns off if no key is pressed within 5 minutes.
- To cancel operations, press Esc.
- To initialize the settings, turn off the machine and then while holding down ⇧ and R, press ⏻ to turn the machine back on. Finally, release ⇧ and R.

Creating Labels

See the under side for steps of creating labels.

3 REFERENCE

Troubleshooting

Error message

Message	Cause/Remedy
Battery Weak!	The batteries are weak.
Check Battery!	The installed batteries are about to run out.
Invalid!	• There is no text above the cursor when you set Numbering. • Invalid character is selected for Numbering. • Invalid number is selected for Tab Length or Label Length.
No Text!	• You try to print a text file when there is no data stored in the memory. • The Print key is pressed when no text is entered. • You try to set Copies, Numbering or Mirror when no text is entered.
Line Limit!	• You try to enter a 3rd line by pressing Enter key. • You try to print a 2 line text when 3.5 mm or 6 mm tape is installed.
No Cassette!	You try to print a label when there is no cassette installed.
Cutter Error!	Tape Cutter lever is used in the middle of printing process.
Full!	The maximum number of characters (80 characters) have already been entered.
Text Too Long!	The text length exceeds the selected label length or the selected Auto Format setting length.
No Frame OK?	Printing on 3.5 mm tape with invalid Frame setting ON. (Select OK to print with no Frame, Esc to cancel.)

What to do when...

Problem	Solution
The display stays blank after you have turned on the machine.	• Check that the batteries are correctly inserted. • If the batteries are weak, replace them. • Check that the suggested adapter is correctly connected.
The machine does not print, or the printed characters are blurred.	• Check that the tape cassette has been inserted correctly. • If the tape cassette is empty, replace it.
The printed characters are not formed properly.	• The batteries may be weak. Replace them.
The memory has cleared on its own.	• The batteries may be weak. Replace them.
A blank horizontal line appears through the printed label.	• There may be some dust on the print head. Remove the tape cassette and use a dry cotton swab to gently wipe the print head with an up-and-down motion. • The print head can be cleaned more easily if the optional print head cleaning cassette (TZ-CL3) is used.
The machine has "locked up" (i.e., nothing happens when a key is pressed, even though the machine is on).	• Turn off the machine, and then while holding down ⇧ and R, press ⏻ to turn the machine back on. Finally, release ⇧ and R. • Note: The text and formats in the display and all text files stored in the memory are erased. Also, the language and unit settings will be cleared.

Specifications

Item	Specification
Dimensions	160 mm (W) × 151 mm (D) × 60 mm (H)
Weight	470 g (without batteries and tape cassette)
Power supply	Six AAA alkaline batteries (LR03) or AC adapter (AD-24ES)
Tape cassette	Brother TZ tape (width) : 3.5 mm, 6 mm, 9 mm, 12 mm

Accessories (Supplies may differ by distribution.)

Accessories	Stock No.
Tape Cassettes	See the attached TZ Tape Catalogue.
AC adapter	AD-24ES
Cutter unit	TC-5 (replacement)

If the cutter blade becomes blunt after repetitive use and the tape cannot be cut cleanly, replace with new cutter unit (stock no. TC-5) by obtaining from an authorized brother dealer.

Contact Information

Contact may differ by country. See the Web site (http://www.brother.eu/).

[CREATING LABELS]

1 MAKING TEXT

Switching Upper Case/Lower Case

A◂a

Upper case (A◂a ON)
A B C D E_

Lower case (A◂a OFF)
a b c d e_

Making Two Line Text

Move the cursor to where the second line starts and press ↵.

Use either 9 mm or 12 mm wide tape for two line texts.

Display
ABC↵DEF_

Label image
ABC
DEF

Entering Symbols

@★☎ → ◂▸ [.,:;"'· 01/11] OK

Group	Symbols
1	. , : ; " ' •
2	@ – & ˜ _ \ /
3	# % ? ! ¿ ¡ *
4	+ – × ÷ ± =
5	( ) [ ] < >
6	➡ ⬅ ⬆ ⬇

Group	Symbols
7	$ ¢ € £ ¥ °
8	² ³ ★ ● ○
9	⏚ ∼ ⎓ ⊣⊢ ⏻ µ Ω
10	⃠ ⚠ ⚠ ☠
11	☎ 📱 📠 ✉

- To go to the next group, press @★☎.
- To cancel operations, press Esc.

Entering Accented Characters

A ~ Z → ÀÂÄ → ÀÂÄ / ◂▸ → ↵ / OK

	Accented Characters
A	Á À Â Ä Æ Ã Ą Å Ā Ă
C	Ç Č Ć
D	Ď Đ
E	É È Ê Ë Ę Ě Ė Ē
G	Ģ Ğ
I	Í Ì Î Ï Į Ī İ
K	Ķ
L	Ł Ĺ Ļ Ľ
N	Ñ Ň Ń Ņ
O	Ó Ò Ô Ø Ö Õ Œ Ő
R	Ř Ŕ
S	Š Ś Ş ß
T	Ť Ţ Þ
U	Ú Ù Û Ü Ų Ů Ū Ű
Y	Ý Ÿ
Z	Ž Ź Ż

	Accented Characters
a	á à â ä æ ã ą å ā ă
c	ç č ć
d	ď ð đ
e	é è ê ë ę ě ė ē
g	ģ ğ
i	í ì î ï į ī ı
k	ķ
l	ł ĺ ļ ľ
n	ñ ň ń ņ
o	ó ò ô ø ö õ œ ő
r	ř ŕ
s	š ś ş ß
t	ť ţ þ
u	ú ù û ü ų ů ū ű
y	ý ÿ
z	ž ź ż

- To cancel operations, press Esc.
- The order of accented characters depends on the language you selected in the LCD.

To Clear

Entries will be deleted backwards.

⌫

All text and settings will be cleared.

⇧ + ⌫

2 DESIGNING LABELS

Setting [Size] (Ⓕ + 1)

Ⓕ → ◂▸ [Size] OK → ◂▸ [Large] OK

[Large]	[Medium]	[Small]
J.SMITH	J.SMITH	J.SMITH

Automatically adjusts the Large, Medium and Small text size according to the tape width.

Setting [Width] (Ⓕ + 2)

Ⓕ → ◂▸ [Width] OK → ◂▸ [×2] OK

[Normal]	[×2]	[×1/2]
J.SMITH	J.SMITH	J.SMITH

Setting [Style] (Vertical) (Ⓕ + 3)

Ⓕ → ◂▸ [Style] OK → ◂▸ [Vertical] OK

[Normal]	[Bold]	[Outline]
J.SMITH	J.SMITH	J.SMITH
[Shadow]	**[Italic]**	**[Italic Bold]**
J.SMITH	J.SMITH	J.SMITH
[Italic Outl](Italic Outline)	**[Italic Shadow]**	**[Vertical]**
J.SMITH	J.SMITH	J.SMITH

Setting [Underline/Frame] (Ⓕ + 4)

Ⓕ → ◂▸ [Underline/Frame] OK → ◂▸ [Underline] OK

[Off]	[Underline]	[Round]	[Candy]
ABC	ABC	ABC	ABC
[Callout]	**[Banner]**	**[Wooden]**	
ABC	ABC	ABC	

Frames will not be printed on 3.5mm tape.

Setting [Tab] (Ⓕ + 5)

You can make aligned texts by setting tabs.
Example: To set a tab between "ABC" and "D"
The cursor should be positioned where you set a tab.

◂▸ [ABCD_] → Ⓕ → ◂▸ [Tab] OK

Display
ABC▯D

Label image
ABC D
← Tab →

Setting [Tab Length](Auto / 0 - 100mm) (Ⓕ + 6)

Ⓕ → ◂▸ [Tab Length] OK → ◂▸ [25mm] OK

- You can also select the length by entering the length with Num keys.
- To return to [Auto], press (space).

Setting [Label Length](Auto / 30 - 300mm) (Ⓕ + 7)

Ⓕ → ◂▸ [Label Length] OK → ◂▸ [30mm] OK

- You can also select the length by entering the length with Num keys.
- To return to [Auto], press (space).

Setting [Auto Format] (Ⓕ + 8)

You can choose label length from six formats to create labels for various applications.

Ⓕ → ◂▸ [Auto Format] OK → ◂▸ [VHS Spine] OK

Application	Length
VHS Spine	140 mm
MiniDV Spine	42 mm
Audio Tape	89 mm

Application	Length
CD Case Spine	113 mm
File Tab	82 mm
Divider Tab	42 mm

3 PRINTING LABELS

Text Preview

You can preview the text before printing.

- The LCD shows the whole text and the label length (mm), then returns to the original text.
- Only the text can be previewed, but not the font, style, size, underline/frame or any additional features.

Feeding (Tape Feed)

⇧ + (Print)

Printing

(Print)

- To cut off the label, push in the tape cutter lever on the upper-right corner of the machine.
- To prevent damage to the tape, do not try to cut while the message "Print" or "Feed" is displayed.

Setting [Margin] (Tape Margin) (Ⓕ + 9)

Ⓕ → ◂▸ [Margin] OK → ◂▸ [Full] OK

[Full]/[Half]/[Narrow] is for leaving equal margins on both sides of the text.

NOTE: Cut along the printed dots (:) with scissors so the text is centered in the label.

Full: ABC (← 25mm → ← 25mm →)
Half: : ABC (12mm 12mm)
Narrow: : ABC (4mm 4mm)

[Chain Print] is for printing more than 1 copy of a label with minimum margin <e.g. 1>. You can also create a label containing texts in various styles; print a text in one style, and before feeding, enter the second text in another style <e.g. 2>.
FEED THE TAPE BEFORE USING THE CUTTER (see Feeding/Printing). Otherwise A PART OF THE TEXT MAY BE CUT OFF. Do not try to pull the tape since this may damage the tape cassette.

Chain Print
<e.g. 1> ABC ABC ABC **(feed & cut)**
<e.g. 2> ABC ABC DEF **(feed & cut)**

Using [Print Option] (Ⓕ + 0)

[Copies]

You can print up to 9 copies of each label.

Ⓕ → ◂▸ [Print Option] OK → ◂▸ [Copies] OK → ◂▸ [Set 1-9? 5] OK

You can also select the number of copies by entering with Num keys.

[Numbering]

You can print many copies of the same text while increasing a selected number by 1 after each label is printed.
Example: To print copies of a label containing a serial number (0123, 0124 and 0125)

◂▸ [0123] → Ⓕ → ◂▸ [Print Option] OK → ◂▸ [Numbering] OK → ◂▸ [Set 3-9? 5] OK

Select the highest number you wish to be printed when setting the number.

[Mirror]

Ⓕ → ◂▸ [Print Option] OK → ◂▸ [Mirror] OK → [Mirror Print?] OK

J.SMITH (mirrored)

Use clear tape in [Mirror], so the labels could be read correctly from the opposite side when attached on glass, windows or other transparent surfaces.

4 COMPLETED LABELS

CONTRACTS 2005
✉ Ken@P-touch.com
Mary.B
Larry Sampson <Marketing Dept.>
☎05(8652)-6491
⃠ DO NOT TOUCH
My Favorite Music
★ 80's Best Hit ★

Peel the printed label from the backing and apply the label.

Favourite Label Memory

USEFUL FUNCTIONS

You can save frequently used texts in the memory and print directly or open to edit if needed. You can save one text into each key (⊙ ~ ⊛) (Maximum: 3 texts).

To Save:
[P-touch_] → ⊙ → ⊙ [Save? :P-touch] OK

To Print:
⊙ [Print? :P-touch] OK

To Open:
⊙ → ⊙ → ⊙ [Open? :P-touch] OK

When the saved text contains more than 8 characters, use ◂▸ to scroll the text.

Function Shortcuts (Ⓕ + 1 ~ 0)

In addition to the basic steps to search for a function, PT-1280 provides you with function shortcuts so you can easily jump to a frequently used function just by pressing Ⓕ and the shortcut key shown in the table below. To confirm, press OK.

Key	Function
1	[Size]
2	[Width]
3	[Style]
4	[Underline/Frame]
5	[Tab]

Key	Function
6	[Tab Length]
7	[Label Length]
8	[Auto Format]
9	[Margin]
0	[Print Option]